LUND UNIVERSITY

Utility Disturbance Management in the Process Industry

Lindholm, Anna

2011

Document Version:
Publisher's PDF, also known as Version of record

Link to publication

Citation for published version (APA):
Lindholm, A. (2011). *Utility Disturbance Management in the Process Industry*. [Licentiate Thesis, Department of Automatic Control]. Department of Automatic Control, Lund Institute of Technology, Lund University.

Total number of authors:
1

General rights
Unless other specific re-use rights are stated the following general rights apply:
Copyright and moral rights for the publications made accessible in the public portal are retained by the authors and/or other copyright owners and it is a condition of accessing publications that users recognise and abide by the legal requirements associated with these rights.
• Users may download and print one copy of any publication from the public portal for the purpose of private study or research.
• You may not further distribute the material or use it for any profit-making activity or commercial gain
• You may freely distribute the URL identifying the publication in the public portal

Read more about Creative commons licenses: https://creativecommons.org/licenses/

Take down policy
If you believe that this document breaches copyright please contact us providing details, and we will remove access to the work immediately and investigate your claim.

LUND UNIVERSITY

PO Box 117
221 00 Lund
+46 46-222 00 00

Utility Disturbance Management in the Process Industry

Anna Lindholm

Department of Automatic Control
Lund University
Lund, October 2011

Department of Automatic Control
Lund University
Box 118
SE-221 00 LUND
Sweden

ISSN 0280–5316
ISRN LUTFD2/TFRT--3253--SE

© 2011 by Anna Lindholm. All rights reserved.
Printed in Sweden,
Lund University, Lund 2011

Abstract

Use of utilities, such as steam and cooling water, is very common at industrial sites. Utilities are often shared between several production areas, and a disturbance in the supply of a utility is therefore likely to affect a large part of the production site, and cause great loss of revenue. In order to minimize the loss of revenue due to disturbances in utilities, the optimal supply of utilities to different areas has to be determined. It is not evident how utility resources should be divided, as both buffer tank levels, the connections between areas and profitability of different areas must be considered.

This thesis presents a general method for reducing the loss of revenue due to disturbances in utilities, the Utility Disturbance Management method (UDM). The method concerns identifying disturbances in utilities, estimating the loss of revenue due to such disturbances, and finding strategies for reducing the loss. A model of the production site is needed to complete all steps of the method. In this thesis, some modeling approaches are suggested, and on/off production modeling with and without buffer tanks is described in detail. The UDM method is applied to an industrial site at Perstorp using these two modeling approaches.

Acknowledgments

First of all I would like to thank my supervisor Charlotta Johnsson for being a never-ending source of inspiration and motivation, and for giving me the opportunity to work with such an interesting research project. My co-supervisor Tore Hägglund has also given me a lot of support and guidance during these first two and a half years as a Ph.D. student, for which I am very grateful.

Krister Forsman at Perstorp should be acknowledged for taking the initiative to this research project together with Charlotta Johnsson, and for encouraging me to write this licentiate thesis. He has also been of great help by proof-reading the thesis.

The research is performed within the framework of the Process Industrial Centre at Lund University (PIC-LU), which is supported by the Swedish Foundation for Strategic Research (SSF). Within this centre I have had the opportunity to discuss my research with people both from the chemical engineering department at the university and from several process industries, which has been very inspiring. I am especially grateful for good collaboration and discussions with Hampus Carlsson, Krister Forsman, Jesper Jönsson and Nils-Petter Nytzén at Perstorp.

I would also like to thank all colleagues at the department for helping to create such a beneficial environment for Ph.D. studies. Thank you for being good roommates, travel companions and friends, and for helping me with all kinds of practical things such as computer-related or administrative issues. Especially, I would like to thank Pontus Giselsson for inspiring discussions, and Bo Bernhardsson for helping me with matrix notation-related issues.

Finally, I would like to thank Emil, my parents, my sister Marie, and my closest friends Elisabet and Cecilia for their support and encouragement during both hard and good times these years.

Anna

Contents

1. Introduction 9
- 1.1 Motivation 9
- 1.2 Methodology 11
- 1.3 Related Research Areas 12
- 1.4 Contribution of the Thesis 12
- 1.5 Publications 13
- 1.6 PIC-LU 14
- 1.7 Thesis Outline 15

2. Enterprise Modeling 16
- 2.1 Role Based Equipment Hierarchy 16
- 2.2 Control Strategies 17
- 2.3 Resources 18
- 2.4 Flowcharts and Dependencies 19
- 2.5 Buffer Tanks 20
- 2.6 Production Models 21

3. Utilities 22
- 3.1 Common Utilities in the Process Industry 22
- 3.2 Utility Disturbance Limits 24

4. Disturbances 25
- 4.1 Causes of Disturbances 26
- 4.2 Disturbances in Utilities 26
- 4.3 Disturbance Management 29
- 4.4 Usage of Buffer Tanks 30

5. Performance Indicators 34
5.1 Utility Availability 34
5.2 Area Availability 35
5.3 Production Revenue Loss 36
6. Utility Disturbance Management Method 38
6.1 Outline of the Method 38
6.2 The UDM Method – Step by Step 40
6.3 UDM Method: On/Off without Buffer Tanks 44
6.4 UDM Method: On/Off including Buffer Tanks 45
6.5 Discussions 51
7. UDM Calculations 56
7.1 Representation of Utilities at a Site 57
7.2 Utility Availability 60
7.3 Area Availability 61
7.4 Estimation of Revenue Loss for each Product 63
7.5 Estimation of Revenue Loss due to each Utility . . . 63
8. Case Study 64
8.1 Perstorp 64
8.2 How to use UDM at Perstorp 67
8.3 Step 1 and 2 of the UDM Method 67
8.4 Step 3 and 4: On/Off without Buffer Tanks 76
8.5 Step 3 and 4: On/Off including Buffer Tanks 80
8.6 Comparison of Results 85
8.7 Conclusions 87
9. UDM Toolbox 88
9.1 Tool 1 – On/off without Buffer Tanks 88
9.2 Tool 2 – On/off including Buffer Tanks 89
9.3 Tool 3 – Continuous Production 89
10. Conclusions and Future Work 90
10.1 Conclusions 90
10.2 Future Work 91
11. Bibliography 92
Nomenclature 97

1

Introduction

1.1 Motivation

In the chemical process industry, companies must continuously improve their operational efficiency and profitability to remain competitive ([Bakhrankova, 2010; Bansal *et al.*, 2005]). This means it is of great importance to minimize losses in revenues due to e.g. disturbances in operation. Plant-wide disturbances cause considerable revenue losses at industrial sites ([Thornhill *et al.*, 2002; Bauer *et al.*, 2007]). Some of these plant-wide disturbances are caused by utilities, such as steam or cooling water, which are used in most industrial sites. At a disturbance in the supply of a utility, the production in all areas that use the utility is affected. Furthermore, areas are often connected by the product flow at the site, which makes the consequences of utility disturbances hard to predict. Two examples of utility disturbances at an industrial site are given in Figure 1.1 and 1.2. Both figures show a pressure drop in the middle-pressure steam net and the production in four areas that all require middle-pressure steam during the same time-period. The green dashed line shows the ideal steam pressure of 14 bar. In Figure 1.1 it can be seen that the production of product 1 is not affected by the disturbance, whereas mainly the production of product 4 has to handle the variations. The reason that the production of product 4 is reduced already before the pressure drop is detected is that the steam boiler fails before the pressure drops, and thus the

operators can start to react to the disturbance before it is visible in the measurement data of the pressure. An indication of the operation of the steam boiler shows that the steam boiler fails just before the production of product 4 is reduced.

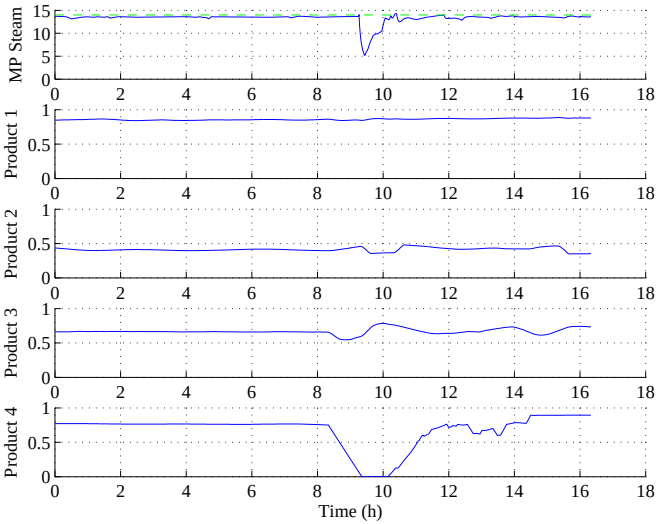

Figure 1.1 Example 1 of a pressure drop in the middle-pressure steam net.

In Figure 1.2, the operators at the site handled the disturbance by starting to reduce the production of product 1 immediately as the pressure in the steam net drops. In this case, the production of product 3 and 4 is back to normal shortly after the disturbance, whereas the production of product 1 and 2 remains to be reduced for a longer time.

Consequently, the same type of disturbances are not handled using the same product flow control strategy each time. This motivates the need for a method that suggests strategies for handling a utility disturbance so that the loss of revenue due to the disturbance is minimized.

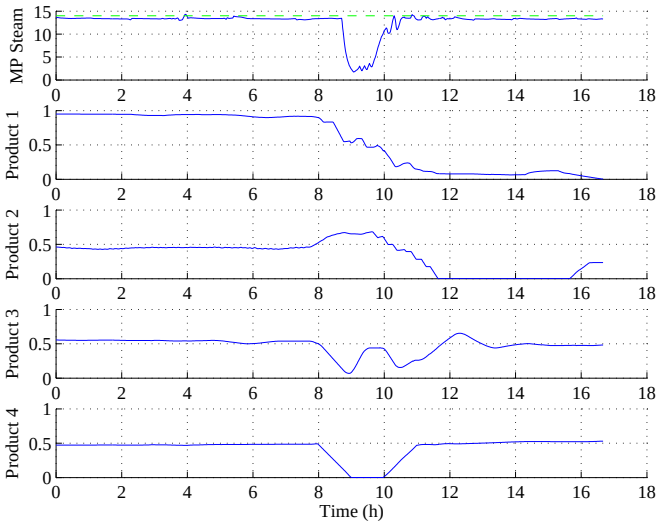

Figure 1.2 Example 2 of a pressure drop in the middle-pressure steam net.

1.2 Methodology

The goal of the research is to develop a general method for utility disturbance management, which can be applied to any industrial site within the process industry. To ensure that the developed theories satisfy this demand, an inductive research approach [Spens and Kovàcs, 2006; Hyde, 2000] is used. Observations and analysis of scenarios at industrial sites lead to hypotheses and possibly to new theories. In this thesis, case studies have been conducted to acquire intuition and understanding of scenarios and phenomena. The research has been conducted in close collaboration with Perstorp, and with other members of the Process Industrial Centre at Lund University (PIC-LU).

1.3 Related Research Areas

Managing disturbances in the supply of utilities at the site level seems to be an unexplored topic, which does not quite fit into any current research area. To show this, and to distinguish the contributions of this thesis, a few related research areas are discussed below.

Disturbances in utilities are often plant-wide disturbances. Detection and diagnosis of plant-wide disturbances is discussed by, among others, [Bauer *et al.*, 2007], [Thornhill and Horch, 2007] and [Thornhill *et al.*, 2002]. However, these studies do not discuss how plant-wide disturbances should be handled when they occur. The area of plant-wide control has been studied by some researchers, among others in [Skogestad, 2004], [Downs and Skogestad, 2011], [Luyben *et al.*, 1997] and [Zheng *et al.*, 1999]. This research mainly concerns choosing the control structure, and the focus is on the connection of unit operations. This thesis focuses on the connection of production areas, i.e. on disturbances in production. However, the research areas have a key idea in common: The objective is to divert process variability away from critical locations to locations where it does less damage [Qin, 1998; Luyben *et al.*, 1999].

Some related studies have been performed at the enterprise level in the equipment hierarchy, mainly within production and operations management. In [Grossmann, 2005], [Varma *et al.*, 2007] and [Grossmann and Furman, 2009], Enterprise-wide optimization (EWO) for the process industries is discussed, which includes planning, scheduling, real-time optimization and inventory control. However, the main focus of this work is on planning and scheduling at the enterprise-level, and not on production control at disturbances at the site-level. In [Lu, 2003], an approach that integrates and coordinates model predictive controllers (MPCs) is suggested for enterprise optimization. However, constructing the models that are required for MPC is often both hard and time demanding for a complex large-scale system like a chemical plant.

Regarding disturbances in utilities specifically, some studies have been done on the synthesis of utilities to satisfy the demand, e.g. by [Papoulias and Grossmann, 1983], [Maia *et al.*, 1995], [Maia and Qassim, 1997] and [Iyer and Grossmann, 1998]. The effects of disturbances on the production at a site seems to be an unexplored topic.

1.4 Contribution of the Thesis

The contributions of this thesis are the following:

- Direct and indirect production-related effects of disturbances in utilities are investigated.
- Three alternative approaches for modeling the production at a site with respect to utilities are suggested.
- A general method for handling disturbances in the supply of utilities is presented. The method is denoted the Utility Disturbance Management method, the UDM method.
- The UDM method is applied to an industrial case at Perstorp using two different production modeling approaches.

1.5 Publications

The thesis is based on the following publications.

Lindholm, A., H. Carlsson and C. Johnsson (2011): "A general method for handling disturbances on utilities in the process industry." In *proceedings of the 18th World Congress of the International Federation of Automatic Control (IFAC), Milano, Italy*, pp. 2761–2766.

Lindholm, A., H. Carlsson and C. Johnsson (2011): "Estimation of revenue loss due to disturbances on utilities in the process industry." In *proceedings of the 22nd Annual Conference of the Production and Operations Management Society (POMS), Reno, NV, USA*.

Lindholm, A. and C. Johnsson (2011): "Plant-wide utility disturbance management." Submitted to *Computers & Chemical Engineering*.

Lindholm, A. (2011): "A method for improving plant availability with respect to utilities using buffer tanks." In *proceedings of the 31st IASTED International Conference of Modeling, Identification and Control (MIC), Innsbruck, Austria*, pp. 378–383.

Lindholm, A., C. Johnsson, T. Hägglund and H. Carlsson (2011): "Reducing revenue loss due to disturbances in utilities using buffer tanks – A case study at Perstorp." In *proceedings of the Conference on Foundations of Computer-Aided Process Operations (FOCAPO), Savannah, GA, USA*. Accepted for publication.

Other relevant publications:

Lindholm, A., K. Forsman and C. Johnsson (2010): "A general method for defining and structuring buffer management problems." In *proceedings of the American Control Conference, Baltimore, MD, USA*, pp. 4397–4402.

1.6 PIC-LU

The research project is performed within the framework of PIC-LU, a Process Industrial Centre at Lund University. The overall goal of PIC-LU is to establish an internationally leading centre for research and competence development in process optimization and control, together with Swedish process industry. The centre is a collaboration at the departments of Chemical Engineering and Automatic Control at the Faculty of Engineering at Lund University.

In the research program, methods and tools for modeling, optimization and control of industrial processes are developed in order to improve production systems with respect to flexibility, controllability, and availability. The methods and the tools are developed from specific solutions to process control problems suggested by the industrial partners. The goal is to make the results from PIC-LU industrially relevant, not only for the participating industries, but on a wide scale in process operation and automation. The current industrial partners are Borealis, Perstorp, Novo Nordisk, Pfizer, K.A. Rasmussen and Novozymes.

In the competence development program, the main goal is to increase the competence level of process optimization and control in industry as well as in academy. The goal is reached through an educational program with industrial courses, PhD courses, Master theses and conferences.

1.7 Thesis Outline

The thesis presents a general method for utility disturbance management. The background that is needed to be able to use the Utility Disturbance Management (UDM) method properly is given in Chapters 2 to 5. Chapter 2 defines the terminology of an enterprise and its resources. Possible approaches for modeling the production at a site are also discussed. In Chapter 3, utilities are defined and common utilities within the process industry are listed. Chapter 4 discusses disturbances and disturbance management strategies, both in general and specifically for utilities. The usage of buffer tanks for disturbance management is also discussed. In Chapter 5, performance indicators for utilities at industrial sites are defined.

In Chapter 6, the UDM method is presented. The method is described step by step, and the site-model specific steps are described for two modeling approaches: on/off production modeling with and without buffer tanks. The chapter also includes a discussions section, where advantages, limitations and possible extensions of the method are reviewed. Some initial findings for continuous production modeling are also described. In Chapter 7, the calculations associated to the UDM method are handled in detail.

A case study, where the UDM method is applied to an industrial site is presented in Chapter 8. The chapter also contains a short description of Perstorp and their site in Stenungsund, where the case study is performed. The UDM method is applied to the Stenungsund site using on/off production modeling with and without buffer tanks.

In Chapter 9, tools for applying the UDM method at an industrial site are described.

Chapter 10 is dedicated to conclusions and ideas for future work. A list of used symbols and acronyms is given at the end of the thesis.

2

Enterprise Modeling

2.1 Role Based Equipment Hierarchy

The role based equipment hierarchy of an enterprise can according to the standard [ISA-95.00.01, 2009] be defined as in Figure 2.1 for continuous operations. An enterprise contains one or more sites, which in turn consist of one or more areas. Each production area has one or more production units, and each production unit consists of one or more units.

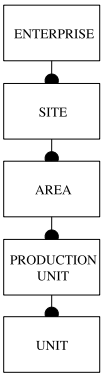

Figure 2.1 Role based equipment hierarchy.

The enterprise determines which products to manufacture and at which site they should be produced. Sites are usually geographically grouped, and are used for rough-cut planning and scheduling. Areas are usually grouped by their geographic location and by their products. Each area produces one or more products, either end products for external sale or intermediates for further use by other areas at the site. Production units generally include all equipment required for a segment of continuous production. A production unit in the process industry could be e.g. a reactor or a distillation column. Units are composed of lower level equipment, such as sensors and actuators.

A plant is a concept that is not well defined with respect to the role based equipment hierarchy. In some contexts, a plant denotes a site, and in other contexts an area is intended. To avoid confusion regarding this term, the words site and area are used exclusively in this thesis.

2.2 Control Strategies

At the enterprise and site levels of the role based equipment hierarchy, a lot of work has been done within the area of operations management, for example in [Grossmann and Furman, 2009], [Varma *et al.*, 2007] and [Grossmann, 2005], where enterprise-wide optimization within the process industry is discussed.

The term plant-wide control, discussed by e.g. [Luyben *et al.*, 1997], [Zheng *et al.*, 1999], [Skogestad, 2004], [Bauer *et al.*, 2007], [Thornhill and Horch, 2007] and [Downs and Skogestad, 2011], usually refers to control at the area level. A well-known example is the Tennessee Eastman challenge problem, presented in [Downs and Vogel, 1993], which is a reactor/separator/recycle system. However, plant-wide control could also refer to control at the site level.

Manufacturing Execution Systems (MES) aims to fill the gap between the planning systems and the control systems, e.g. strives to integrate the site, area and production unit levels. MES is discussed in e.g. [Scholten, 2009], [Brandl, 2002] and [Deuel, 1994]. A related area of interest is Manufacturing Operations Management (MOM), which is defined in the standard [ISA-95.00.03, 2005].

At the area and production unit levels, local optimization methods and control structures such as model predictive control (MPC) are commonly used to maximize the production of the unit or connection of units. An example of MPC at the area level is given in [Ricker and Lee, 1995], where nonlinear MPC is applied to the Tennessee Eastman challenge process. MPC has also been used for optimization at higher levels in the equipment hierarchy, e.g. by [Perea-López *et al.*, 2003] for optimization of the supply chain. In [Skogestad, 2004] these levels correspond to the local optimization layer and the supervisory control layer.

At the lowest level in the role based equipment hierarchy, the unit level, tuning methods for controllers of units within the production units are often used. In [Skogestad, 2004] this level corresponds to the regulatory control layer.

2.3 Resources

According to the standard [ISA-95.00.01, 2009] the production capability of an enterprise can be divided into the following three classes.

- **Personnel**
  Personnel includes personnel of different classes and with different qualifications needed for production.

- **Material**
  Material includes the inventory of raw, finished, and intermediate materials. Utilities, which are further discussed in Chapter 3, can also be seen as part of the material class. Utilities are support processes that are utilized in production, but are not part of the final product.

- **Equipment**
  Equipment includes all equipment that is required for production, such as tanks, pumps and valves.

2.4 Flowcharts and Dependencies

At each level in the role based equipment hierarchy, a flowchart can be made showing the product flow through the enterprise, site or area. This is illustrated in Figure 2.2. In these flowcharts, the dependence by a site/area/production unit on other sites/areas/production units can be seen.

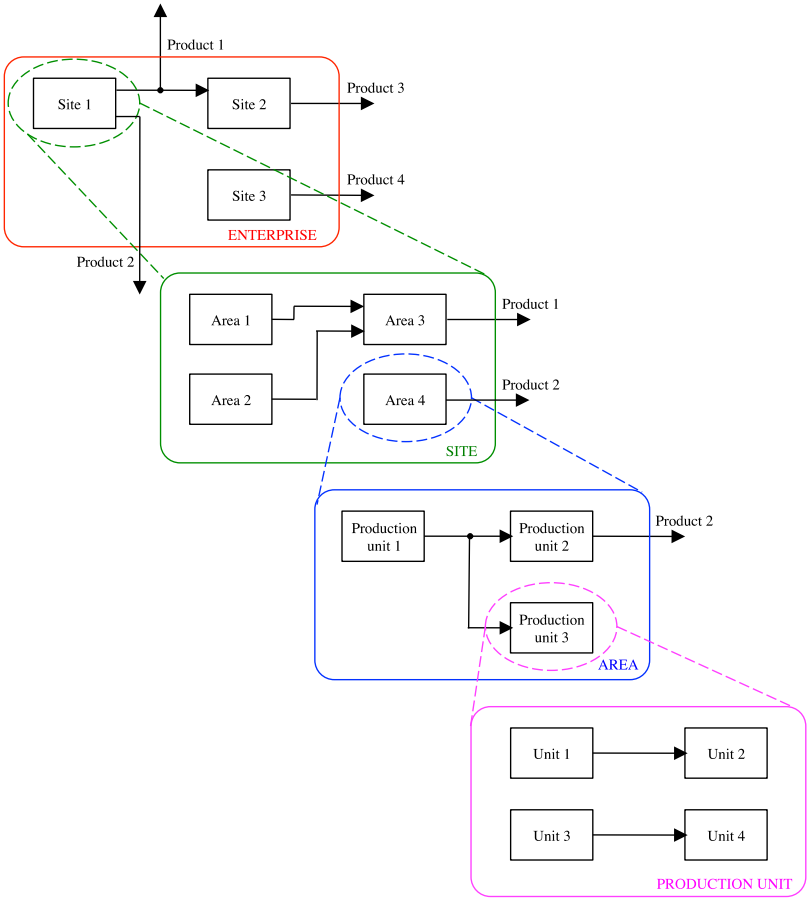

Figure 2.2 Flowcharts at different levels in the equipment hierarchy.

The work presented in this thesis belongs at the site level and does not consider details such as single production units in the areas. The objective is to find methods for minimizing the losses for an entire site due to disturbances in utilities affecting one or more areas.

2.5 Buffer Tanks

Buffer tanks may be used at different levels in the equipment hierarchy, to provide smoother operation of production units, areas or sites. Buffer tanks are commonly placed between production units, areas, or sites for material balance control [Buckley, 1964] and serve several different purposes. In [Faanes and Skogestad, 2003], a buffer tank is defined as "a unit where the holdup (volume) is exploited to provide smoother operation". The most common uses of buffer tanks are [Faanes and Skogestad, 2003; Lindholm *et al.*, 2010]:

A. To avoid propagation of disturbances, i.e. to minimize flow variations in the in- or outflow of the buffer tank. Flow variations often cause poor behavior or failure of sensitive production units, such as reactors, evaporators, distillation columns and recovery boilers [Shinskey, 2005]. A buffer tank placed before or after a sensitive production unit can improve its behavior and increase its availability.

B. To separate production units from each other. The aim is to ensure that the production units, areas or sites can operate independently from each other, e.g. to reduce the interdependence between production units, areas or sites. A buffer tank placed before the bottlenecking production unit/area/site could be used to ensure that this production unit/area/site does not have to reduce its operating speed, even if a preceding production unit/area/site suffers a shutdown. Ensuring that the bottleneck operates at its maximum speed as much as possible can make a significant gain in productivity.

Buffer tanks are also assigned other names, which in many cases are dependent of the purpose of the buffer tank. Some common notations are inventories, intermediate storage vessels, holdup or mixing tanks, surge drums or accumulators [Faanes and Skogestad, 2003].

In this study, the buffer tanks that are considered are those placed between production areas at the site (site layer in Figure 2.2, Section 2.4). These buffer tanks can be seen both as inventories of products that can be sold on the market (A), and as buffer tanks that allow independent operation of production areas (B). These two different uses of the buffer tanks give contradictory demands on the level controller of the buffer tank. In this thesis, the focus is on separating production areas from each other (B), so that a downstream area can operate even if an upstream area suffers a failure.

2.6 Production Models

Utilities are often shared between the production areas at a site. Three approaches for modeling the production at a site with respect to utilities are suggested in this thesis, here listed according to level of detail of the obtained model.

1. **On/Off production without buffer tanks**
   Utilities and areas are considered to be either operating or not operating, i.e. 'on' or 'off'. An area operates at maximum production speed when all its required utilities are available, and does not operate when any of its required utilities are unavailable. It is assumed that there are no buffer tanks between the areas at the site. This means that if an area is unavailable, downstream areas of that area will also be unavailable.
2. **On/Off production including buffer tanks**
   The same modeling approach as approach 1, but buffer tanks between areas are included in the model. The buffer tanks act as delays from when an area upstream of the tank stops producing until its downstream areas have to be shut down.
3. **Continuous production**
   Utility operation and production are considered to be continuous. Areas can operate at any production rate below the maximum limit determined by the operation of utilities. Some initial findings regarding continuous production modeling are presented in Section 6.5.

3

Utilities

Utilities are support processes that are utilized in production, but are not part of the final product. Utilities may be seen as belonging to the 'Material' category in the standard [ISA-95.00.01, 2009], as described in Section 2.3. In this chapter, some common utilities in the process industry are described, and the characteristics of disturbances in the supply of utilities are discussed.

3.1 Common Utilities in the Process Industry

In [Brennan, 1998], some utilities are described. Here, devices for combustion of tail gas and the vacuum system utility have been added to expand the list of common utilities in the process industry. Examples of uses of these utilities are described below.

Steam
: The steam net is commonly used for heating, for example heating of a reactor at start-up, or for supplying energy, for example for distillation or endothermic reactions. There could be several steam nets at the same site, for example one net with high-pressure steam and one with low-pressure steam.

Cooling water
: The cooling water system is used for example for cooling at exothermic reactions and in the condensing phase of distillation. Cooling fans, cooling a local cooling coil, are sometimes used for extra cooling in a certain area at the site.

Electricity

Electricity is needed in order for the instruments and pumps to operate. Electricity of different voltages could be required.

Fuel

Fuel, typically gas, oil or coal, may be needed for furnaces, kilns and steam boilers to operate. It may also be required for start-up of certain units or areas.

Water treatment

The water treatment utility, or effluent treatment, is used for purification of process water, precipitation and ground water.

Combustion of tail gas

A flare is a safety device used for combustion of tail gas at unforeseen events. There could also be other equipment for combustion of tail gas. These devices are often used for the combustion of tail gas during normal operation, and might be local utilities, i.e. utilities that only operate at a single area.

Nitrogen

Nitrogen is needed to maintain pressure in vessels by pushing away oxygen to prevent oxidation.

Water

Feed water, which consists of varying proportion of recovered condensed water (return water) and purified fresh water (make-up water) is needed for the boilers to be able to produce steam. Water is also required for washing and for the fire protection water system.

Compressed air

Compressed air could be both process air and instrument air. Instrument air is needed for the pneumatic instruments to work. Instrument air might be a local utility; e.g. every area has its own instrument air system.

Vacuum system

Vacuum is used to lower the boiling point of a liquid to facilitate distillation and to remove gas produced in reactions. The vacuum system might be a local utility; i.e. every area has its own vacuum system.

3.2 Utility Disturbance Limits

Utilities most often affect production only when their supply is interrupted or does not meet the specifications. For example, the cooling water utility does often not affect production until the temperature of the cooling water is over some temperature limit. One possible way of identifying when a utility suffers a disturbance is thus as when the measurement of a utility parameter, such as temperature or pressure, goes outside a limit at which the poor operation of the utility will have negative consequences for the production at the site. The consequences could be of different severity depending on how large the deviations from the limits are; a very high cooling water temperature could for example affect the production more than just a little too high temperature. The suggestion is to set the limit so that it represents the limit for when maximum production can no longer be maintained because of poor operation of the utility. An example of the operation of the cooling water utility at an industrial site is given in Figure 3.1. The suggested disturbance limit is marked with a dashed red line. Utility disturbance limits are further discussed in Section 4.2.

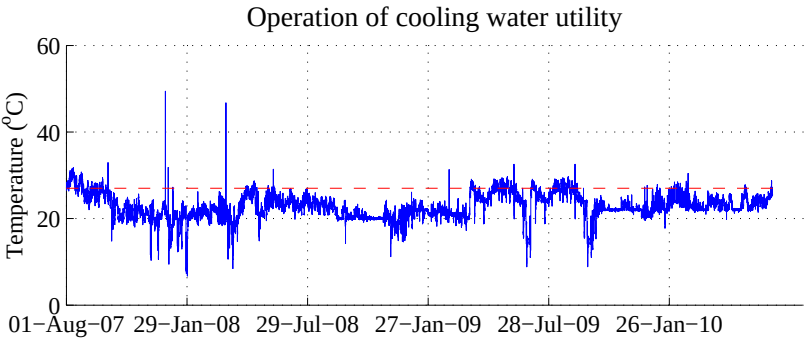

Figure 3.1 Cooling water temperature and disturbance limit.

4

Disturbances

There are several different definitions of the term “disturbance” in different areas of research, and also within research areas. Also, in many studies, a definition is omitted. A definition that fits quite well for this thesis is the definition of disturbances in logistics networks given in [Hinrichs *et al.*, 2005]: “Disturbances are all events which prevent a process to deliver an economic result”. Using this definition, failures at the unit or production unit level in the role based equipment hierarchy (see Section 2.1) will not be regarded as disturbances, if their effects do not propagate to the area level of the hierarchy. Examples of disturbances that fit into the definition are such as a pressure drop in the steam net, and variations in cooling water temperature; disturbances that affect one ore more production areas at a site. Disturbances that affect entire areas or sites in an enterprise are sometimes also denoted plant-wide disturbances. These disturbances will have a negative impact on the economic performance of the production site [Bauer *et al.*, 2007].

In this chapter, disturbances are categorized according to their root cause, and disturbances in the supply of utilities are discussed in detail. Different disturbance management approaches are also discussed, as well as the use of buffer tanks for disturbance management.

4.1 Causes of Disturbances

The cause of a disturbance can be any of the resources that are required for production (described in Section 2.3).

1. **Personnel**
   An incorrect action by an operator at the site or lack of personnel with the correct education may cause a disturbance.
2. **Material**
   Lack of a raw material or disruptions in the supply of a utility may cause disturbances.
3. **Equipment**
   Equipment errors such as a pump failure or a sticky valve may cause disturbances.

In this thesis, the focus is on disturbances in the supply of utilities.

4.2 Disturbances in Utilities

As mentioned in Section 3.2, utilities are often such that they affect production only when their supply is interrupted, or does not meet the specifications. The suggestion given in this section on how to identify utility disturbances, is to set limits for when maximum production can no longer be maintained because of poor operation of the utility. A disturbance is defined as when the utility operates outside the limits. Potential disturbance limits are listed below for the utilities in Section 3.1. These disturbances have been identified with help from personnel at industrial sites within the process industry.

Steam

- Too high or too low pressure in steam net

Cooling water

- Too high cooling water temperature
- Too high temperature of water cooled by cooling fans
- Loss of cooling water flow

Electricity

- Too low voltage for the instruments to work
- Loss of low voltage electricity
- Loss of electricity

Fuel

- Too low flow of fuel

Water treatment

- Too high content of undesired substances in outgoing water [1]

Combustion of tail gas

- Too large flow of tail gas to flare
- Flare flame goes out
- Failure of other devices for combustion of tail gas

Nitrogen

- Too low pressure in nitrogen header
- Too fast variations of nitrogen pressure

Water

- Too low pressure in feed water header
- Loss of fire protection water

Compressed air

- Too low pressure of instrument air
- Loss of process air

Vacuum system

- Loss of vacuum system
- Too fast variations in vacuum pressure

[1] In Sweden usually monthly or yearly limits.

One possibility of validating a disturbance limit is by plotting the maximum production of each area[2] as a function of the utility parameter for which the limits should be evaluated. If the limit is correctly set, it should be seen that the maximum production decreases outside the limits. However, since there are many reasons for not producing at full speed, no conclusions can be drawn from the maximum production within the limits. The validation strategy is illustrated by an industrial example in Figure 4.1. In this example, the temperature limit set for the cooling water utility is evaluated. The limit that has been set for this utility is 27°C, which is illustrated with the dashed red vertical lines in the figure.

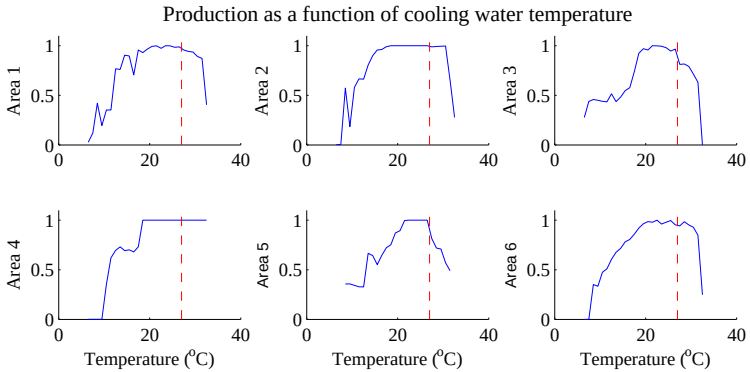

Figure 4.1 Maximum production in different areas as a function of cooling water temperature. The dashed red lines indicate the limit set for the cooling water utility.

In this case it seems like the limit is reasonable, since the maximum production decreases for temperatures above the limit, for area 1, 3 and 5. However, for some areas it seems like higher cooling water temperatures could be tolerated. One possibility to refine the definition of disturbances in utilities is to allow different limits for different areas. For the example in Figure 4.1, the disturbance limits for the cooling water temperature could be increased for areas 2, 4 and 6.

[2]Possibly averaged over e.g. one hour.

4.3 Disturbance Management

Two main approaches of disturbance management could be identified, disturbance handling at the occurrence of a disturbance, and preventive disturbance management strategies that aim to reduce the number of disturbances. These two approaches have been given different names within different research areas, and are sometimes also divided into sub-approaches. Here the terms *reactive* and *proactive* disturbance management are used. These terms are also used in [Barroso *et al.*, 2010], where they are defined for the supply chain, and in [Monostori *et al.*, 1998], where they are used in the context of scheduling. The formal definitions of reactive and proactive disturbance management that are used in this thesis are given below.

> *proactive disturbance management* — disturbance management strategies that are aiming to prevent future disturbance occurrences.
>
> *reactive disturbance management* — disturbance management strategies for handling disturbances when they occur.

What methods that can be used for disturbance management depends on the cause of the disturbance. Possible disturbance management strategies for the disturbances related to the resources in Section 2.3 are listed below.

1. **Personnel**
   Proactive: Training of operators [Xia and Rao, 1999].

   Reactive: Decision support for exception handling [Xia and Rao, 1999].

2. **Material**
   Proactive: The effects of material-related disturbances can often be reduced by including more redundancy, such as investing in an extra steam boiler or cooling fan. However, these changes are often expensive since they require redesign of the system [Greenberg, 1991]. Investing in buffer tanks for raw materials or utilities can also in the same manner reduce the effects of disturbances caused by material.

Reactive: The effects of disturbances in the supply of raw materials and utilities might be reduced by dividing the resources of raw materials or utilities at a disturbance in a clever way at the site, i.e. to transfer the variability to a location where it does as little damage as possible [Qin, 1998]. Buffer tanks can also be used for this purpose, since the effects of disturbances caused by material can be reduced by optimal use of the buffer volumes at the occurrence of a disturbance.

3. **Equipment**
   Disturbances caused by equipment can be reduced by proper maintenance, either planned or unplanned.

   Proactive: Planned maintenance – scheduled and condition-based maintenance (as defined in [Williams *et al.*, 1994]). Including more redundancy can also reduce the effects of equipment-related disturbances.

   Reactive: Unplanned maintenance – corrective and emergency maintenance (as defined in [Williams *et al.*, 1994]).

4.4 Usage of Buffer Tanks

Buffer tanks may be used both for proactive and reactive disturbance management. For proactive disturbance management, steady state buffer tank levels or inventories can be chosen to reduce the effects of disturbances, if they should occur. Reactive disturbance management concerns controlling the product flow connected to the buffer tank at the occurrence of a disturbance, to minimize the consequences. These two approaches are discussed in the following two subsections.

Proactive: Choice of Buffer Tank Levels

If the maximum expected disturbance durations and the desired production rates of areas or production units up- and downstream of a buffer tank are known, this information may be used to choose a good stationary level of the buffer tank, with respect to disturbances. An example of areas connected by the product flow through a buffer tank is shown in Figure 4.2. To minimize the loss of revenue because of

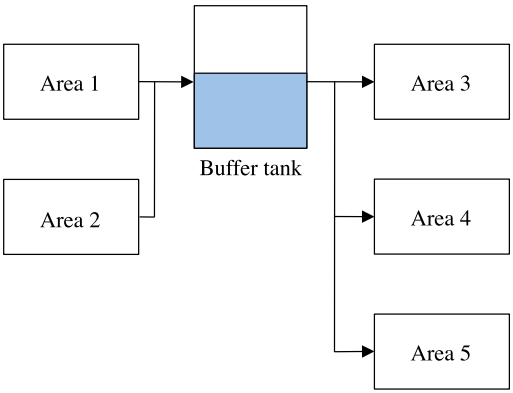

Figure 4.2 Example of areas connected through a buffer tank.

decreased production, the buffer tank should enable area 3, 4 and 5 to operate during a disturbance on area 1, or area 2, or area 1 and 2 simultaneously. The maximum expected disturbance duration of disturbances in these areas and the corresponding demanded inflows to area 3, 4 and 5 during the disturbance, gives a desired lower limit for the buffer tank level. In the same manner, the maximum expected disturbance duration for disturbances on area 3, 4 and 5 and the corresponding desired outflows of area 1 and 2 gives a desired upper limit for the level of the buffer tank. This limit can also be thought of as how much ullage[3] there must be in the buffer tank for area 1 and 2 to be able to produce during the entire disturbance on area 3, 4 and 5. Depending on the disturbance durations and required flows upstream and downstream, the upper limit on the level might or might not be higher than the lower limit. If the upper limit is higher than the lower limit, the buffer tank is large enough for supplying all areas during the entire disturbance (left buffer tank in Figure 4.3). The optimal choice of level within the admissible region depends on the trade-off between the cost of keeping inventory and the probability of having larger disturbances upstream of the tank than those that were used for determining the critical limits. If the upper limit is not higher than the lower limit (right buffer tank in Figure 4.3), the buffer tank is not

[3]ullage = unfilled space of a tank.

large enough, and a revenue loss due to decreased production in up- or downstream areas is unavoidable. For this case, there are two options:

1) Choose the optimal level for the current buffer tank
2) Replace the buffer tank with a larger tank

For alternative 1), the optimal level depends on the likelihood of disturbances up- and downstream of the tank [Lindholm *et al.*, 2010], and the cost of reducing the production in up- and downstream areas.

With alternative 2), the buffer tank is replaced by a tank that is large enough to ensure that the disturbance of maximum expected duration can be handled. However, purchase and installation of new tanks are generally expensive, why this alternative seldom is an option at industrial sites.

Another issue when choosing buffer tank levels is which disturbance durations that should be used for computation of the limits. If the maximum expected disturbance durations up- and downstream are used, all disturbances of durations shorter or equal to the maximum expected duration are handled. However, the disturbances with the longest durations may correspond to very unlikely scenarios, which will make the limits very conservative. One approach to avoid this situation is to choose the limits such that a certain percentage of all disturbances will be handled, based on previous disturbance durations. This could decrease the minimum required inventory levels and increase the maximum allowed inventory levels significantly. One way to illustrate how frequent different disturbance durations are is to make a histogram of

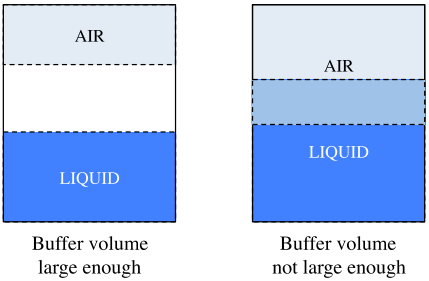

Figure 4.3 Two scenarios when attempting to choose buffer level.

stop lengths. An example of such a histogram is shown in Figure 4.4. In the figure, the time that should be used for choosing the buffer tank level if 90 % of all disturbances should be handled is indicated with a dashed red vertical line.

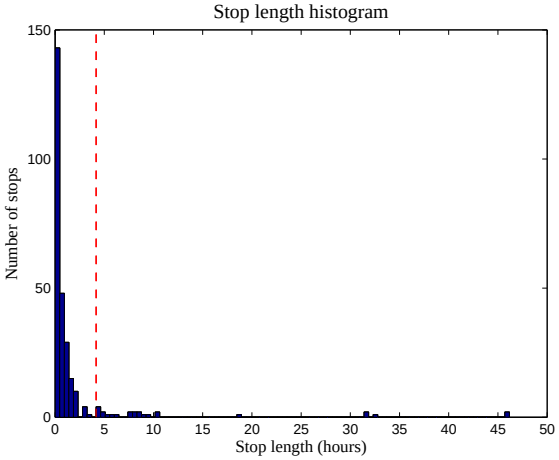

Figure 4.4 Example of histogram of stop lengths. The bars to the left of the dashed red vertical line correspond to 90 % of the total number of disturbances.

Inventory management also concerns the trade-off between disturbance management and cost of inventory, which is discussed in e.g. [Silver *et al.*, 1998], [Newhart *et al.*, 1993] and [Hopp *et al.*, 1989]. This topic is not discussed in this thesis. To avoid unnecessarily high inventories, the method described above is used, so that rare disturbances of long durations are disregarded when choosing inventory levels.

Reactive: Control of the Product Flow

At the occurrence of a disturbance up- or downstream of a buffer tank, the volume of the buffer tank may be used to ensure that down- or upstream areas can run during the disturbance. How the volume of the buffer tank should be divided among up- or downstream areas depends on the costs of reducing the production in each area. In this thesis, profitability of the products produced in the areas are used to decide the prioritization order.

5

Performance Indicators

Key Performance Indicators (KPIs) are quantifiable and strategic measurements that reflect the critical success factors of an enterprise [ISO/WD-22400-2, 2011]. In this chapter, some performance indicators that are relevant for the topic of this thesis are defined.

5.1 Utility Availability

A key performance indicator that could be used for determining how often a utility suffers a disturbance is the availability of the utility. The availability of a production unit is according to the standard [ISO/WD-22400-2, 2011] the ratio between the actual production time and the planned allocation time, where the planned allocation time is the time in which the unit can be used (the operation time) minus the planned downtime. For utilities, the suggestion is to define availability as the fraction of time all utility parameters are inside their limits. This represents the fraction of time when there is a possibility for maximum production, assuming that all utility disturbance limits (see Section 4.2) have been correctly set. Utility availability can be computed if measurements of all utility parameters are available. Planned stops should not be included in the availability computations. Computation of utility availability using matrices is handled in Section 7.2.

Utility Dependence

Some utilities are dependent on other utilities, which may have as consequence that a disturbance on one utility also shows up in the measurements of other utilities. For example, if feed water is not available, steam could not be produced, and the steam utility could not possibly be available. This should be considered a feed water failure and not a steam failure.

Utility interdependence can be represented in a flowchart. An example of a utility dependence flowchart for electricity, cooling water, instrument air, feed water and steam is given in Figure 5.1.

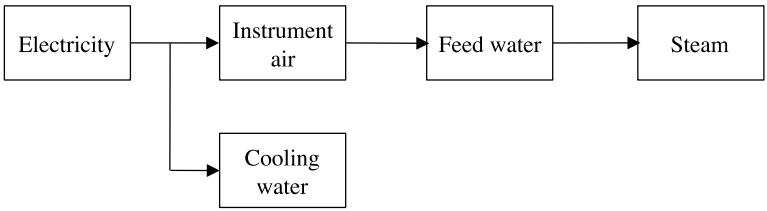

Figure 5.1 Utility dependence flowchart for five utilities.

Utility dependence can be taken into account when calculating utility availability. If it is not taken into account, the utilities dependent on other utilities will appear to have lower availability than they actually have.

5.2 Area Availability

A simple estimate of the availability of each area, with respect to utilities, is as the fraction of time all utilities needed at the area are available; i.e. the intersection of the operation of all concerned utilities. The measure of area availability should be interpreted as the fraction of time an area has a possibility of operating at maximum production rate, with respect to utilities. Area availability computed without considering the connection of areas at a site is denoted *direct area availability*. Computation of area availability using matrices is handled in Section 7.3.

Area Dependence

If an area is unavailable, this may also affect other areas at the site, since areas could be dependent on obtaining raw materials from, or delivering product to, other areas. Here, it is assumed that downstream areas do not affect upstream areas, since the product of an upstream area often can be sold on the market when it cannot be delivered to a downstream area. The area interdependence can be seen in a flowchart of the product flow at the site (see Section 2.4).

To include area dependence in the measure of area availability, *total area availability* is introduced. Total area availability is defined as the fraction of time all the required utilities and all upstream areas are available. Thus, total area availability contains both the direct effects of a utility disturbance, and the indirect effects because of area interdependence.

The direct and indirect effects of utility disturbances can also be represented in a table, by combining the area dependence relations with the information on which utilities that are required at each area. An example of such a table is given in Section 7.3

5.3 Production Revenue Loss

Production revenue loss is obtained when an area cannot operate at the desired (in this thesis: maximum) production rate. The revenue loss is here defined as the contribution margin multiplied by the duration when production was reduced, and by the difference of the desired production rate and the actual production rate during the time period. The contribution margin is the marginal profit per volume.

In this thesis, *direct revenue loss* and *total revenue loss* are introduced for utilities and areas. The interpretation of these measures differs slightly depending on if losses for each utility or for each area is intended.

For an area, the direct revenue loss is the loss of revenue due to poor operation of the utilities at that area. The total revenue loss is obtained if also the effects of utility disturbances in areas that the area is dependent on are considered.

For utilities, the direct revenue loss is the loss each utility causes

directly, because of reduced production in the areas that require the utility. The total revenue loss also includes the revenue loss due to reduced production in areas that are dependent on the areas that require the utility.

An estimation of the production revenue loss due to disturbances in utilities can quickly be obtained using an on/off production model of the site. The computations may be performed with matrices, as described in Section 7.4 and 7.5.

6

Utility Disturbance Management Method

In this chapter, a general method for utility disturbance management is introduced. First, the outline of the method is given and the steps of the method described in detail. This is followed by description of the site-model specific steps of the method when using on/off production modeling with and without buffer tanks. A discussions section ends the chapter by mentioning advantages, drawbacks and possible improvements of the method. Some initial findings regarding continuous production modeling are also described.

6.1 Outline of the Method

The general method for reducing the revenue loss due to disturbances in utilities is denoted the utility disturbance management (UDM) method, and can be described in two major steps:

A) Estimate the revenue loss caused by each utility at the site

B) Reduce the revenue loss due to future disturbances in utilities

Step A) means looking backwards in time and investigating the revenue loss caused by each utility during a certain time period. This information can then be used for completing step B); to reduce the revenue loss for future disturbances in utilities. The strategies for reducing the loss may be both proactive and reactive disturbance man-

agement strategies (see Section 4.3). For completing these two steps, a model of the site is needed. Some suggestions of modeling approaches are given in Section 2.6. The accuracy of the strategies for reducing the revenue loss depends on the level of detail of the model of the site. A less detailed model will only give simple strategies for reducing the revenue loss, whereas a more detailed model is required to obtain good disturbance management strategies. The outlines of the strategies that could be obtained with the modeling approaches presented in Section 2.6 are described here.

1. **On/off production without buffer tanks**
   With this modeling approach, the revenue loss due to utilities may be estimated using the utility availabilities and the maximum productions of all areas at the site. The strategies obtained for reducing the loss are proactive disturbance management strategies only. The method gives an answer to where efforts should be focused to improve the operation of utilities, to have the greatest effect in terms of revenue loss reduction.

2. **On/off production including buffer tanks**
   With this approach, buffer tanks between areas at the site may be used to reduce the revenue loss. In addition to the proactive disturbance management strategies from modeling approach 1, the proactive strategy of choosing optimal buffer tank levels (or replacing too small buffer tanks) may also be used. Reactive strategies can also be formed, such as guidelines for if or when areas should be shut down due to a utility disturbance. Shutdown is necessary when the buffer volume at the occurrence of the disturbance is not enough for supplying all areas during the entire disturbance duration.

3. **Continuous production**
   With continuous production modeling, more advanced reactive disturbance management strategies can be obtained, in addition to the previously described proactive approaches. One useful reactive approach is guidelines on how to control the product flow when a disturbance occurs in order to minimize the loss of revenue. The optimal division of the utility resources at a disturbance could also be found.

6.2 The UDM Method – Step by Step

The UDM method can be divided into four steps. The first three steps concern acquiring the necessary information about the site and estimating the revenue loss that is caused by each utility during a certain time period (A), and the last reducing the revenue loss due to future disturbances in utilities (B). Only the last two steps of the method are model specific, i.e. depends on which production modeling approach that is used. The four steps, with sub-steps, are listed below.

Step 1: Get Information on Site-structure and Utilities

a) Depict the overall structure of the site
b) List all utilities used at the site
c) Determine which utilities that are required at each area
d) Draw a utility dependence flowchart
e) Define disturbance limits for each utility
f) Get relevant measurement data
g) List all planned stops during the time period

Step 2: Compute Utility and Area Availabilities

a) Compute utility availabilities
b) Compute direct and total area availabilities

Step 3: Estimate Revenue Loss due to Disturbances in Utilities

a) Select site model
b) Estimate flow to the market of each product
c) Get contribution margins for each product
d) Estimate revenue loss for each product
e) Estimate revenue loss due to each utility

Step 4: Reduce Revenue Loss due to Future Disturbances in Utilities

The four steps of the UDM method are described in the following four subsections.

Step 1: Get Information on Site-structure and Utilities

a) *Depict the overall structure of the site*

Determine the role based equipment hierarchy (see Section 2.1). Draw the overall structure of the site by highlighting its production areas and the physical connections between them. The structure could be represented by a flowchart on the site level (see Section 2.4). The interdependence of areas at a site may also be represented by a matrix, as described in Section 7.1.

b) *List all utilities used at the site*

List the utilities that are required for production at the site. Common utilities within the process industry are listed in Section 3.1.

c) *Determine which utilities that are required at each area*

Determine which utilities that are required at each area. This can be summarized in a table or in a matrix, as described in Section 7.1.

d) *Draw a utility dependence flowchart*

Some utilities might be dependent on the operation of other utilities. Determine the hierarchy of the utilities and draw a utility dependence flowchart. An example is given in Figure 5.1 in Section 5.1. Utility dependence can also be represented in a matrix, as described in Section 7.2.

e) *Define disturbance limits for each utility*

Determine the utility parameters that describe the operation of each utility. Determine the critical limits for each utility parameter, i.e. determine the limits for when disturbances in the utility parameters have negative impact on production. This is described more thoroughly in Section 3.2 and 4.2. Utility parameters are commonly chosen as temperature, pressure or flow of the utility. As an example, production might be affected if the steam pressure is lower than 41 bar in a 43 bar steam net, or if the cooling water temperature is higher than 27 °C.

f) *Get relevant measurement data*

Decide which time period to consider. Get measurement data for all utility parameters for all utilities for this time period.

g) *List all planned stops during the time period*
Find the time and duration of all planned stops at the site during the considered time period. Data from these periods should not be included in the availability computations.

Step 2: Compute Utility and Area Availabilities

a) *Compute utility availabilities*
Compute the utility availabilities, i.e. the fraction of time each utility operates correctly, using the disturbance limits (step 1 e)). Take utility dependence (step 1 d)) and planned stops (step 1 g)) into account. Further information about utility availability is provided in Section 5.1. In Section 7.2, calculation of utility availability is handled.

b) *Compute direct and total area availabilities*
Compute the area availability for each area, i.e. the fraction of time each area has access to all required utilities, and thereby has the possibility of operating at its maximum production rate. Do the computations both without and with consideration to area interdependence (direct and total availability). The measure of area availability is introduced in Section 5.2. Calculation of area availability is performed according to Section 7.3.

Step 3: Estimate Revenue Loss due to Disturbances in Utilities

a) *Select site model*
For completing step 3 of the method, a production model of the site is required, which describes the relation between the operation of utilities and the production of all areas. Three approaches for modeling the production at a site are suggested in Section 2.6. If on/off production modeling without buffer tanks is used, the utility and area availabilities are enough for estimating the revenue losses due to each utility and the revenue loss for each product due to all disturbances in utilities. If another modeling approach is used, the model of the site has to describe how the production of each area is affected when a utility is unavailable. The assumption for all modeling approaches is that the areas have the possibility of producing at maximum speed if all utilities are available.

b) *Estimate flow to the market of each product*

Estimate the desired flow to the market of each product during the selected time-period. In this thesis, a constant flow to the market is assumed, although it might be advantageous to allow the flow to vary over the time-period. If maximum flows to the market are desired, the maximum production rates of all products may be used to estimate the flows to the market. The estimate is given by the difference of the production of the product and the inflows of the product to downstream areas. If the estimated flow becomes less than zero, it is set to zero and the maximum production of the area(s) downstream is adjusted to correspond to the maximum production of the upstream area.

c) *Get contribution margins for each product*

Get the contribution margins for each product. This information can often be acquired from sales personnel at the site. The margins may vary over time. However, here it is assumed that the contribution margins are constant over the selected time-period.

d) *Estimate revenue loss for each product*

Compute the direct and total revenue loss for each product due to all disturbances in all utilities during the selected time-period, given the modeling approach selected (step 3 a)). Use the estimation of the flows to the market (step 3 b)) and the contribution margins (step 3 c)). The direct revenue loss is obtained if only the direct effects of disturbances in utilities are considered, whereas the total loss is acquired when also considering the area interdependence. For a more thorough description of direct and indirect losses for areas, see Section 5.3.

e) *Estimate revenue loss due to each utility*

Compute the direct and total revenue loss caused by disturbances in each utility separately, given the modeling approach selected (step 3 a)). Use the estimation of the flows to the market (step 3 b)) and the contribution margins (step 3 c)). The direct revenue loss is obtained if only the direct effects of disturbances in the utility is considered, whereas the total loss is acquired when also considering the indirect effects of disturbances in the utility because of area interdependence. For a more thorough description of direct and indirect losses due to utilities, see Section 5.3.

Step 3 d) and 3 e) are dependent on the choice of site model and could not described in detail for the general case. Section 6.3 and Section 6.4 describe these steps for on/off production modeling without and with buffer tanks, respectively.

Step 4: Reduce Revenue Loss due to Future Disturbances in Utilities

This step is dependent on which modeling approach for modeling the site that was chosen (step 3 a)). In general, the step consists of finding proactive and/or reactive disturbance management strategies for reducing the revenue loss due to future disturbances in utilities. Proactive strategies are aiming to reduce the number of disturbances in the supply of utilities, whereas reactive strategies aim to handle disturbances in utilities as they occur (see Section 4.3). The strategies for reducing the loss that could be determined in this step depend on which site model that is selected. Section 6.3 and Section 6.4 describe how this step is performed for on/off production modeling with and without buffer tanks, respectively.

6.3 UDM Method: On/Off without Buffer Tanks

Step 1, 2, and step 3 a) to 3 c) are performed as described in Section 6.2.

Step 3: Estimate Revenue Loss due to Disturbances in Utilities

3 d) *Estimate revenue loss for each product*
With on/off production modeling without buffer tanks, areas are assumed to be operating at maximum production speed when available, and not at all when unavailable. Thus, the direct and total area availabilities can be used to estimate the direct and total revenue loss for each product due to all disturbances in utilities. The area availabilities (step 2 b)) and the flows to the market (step 3 b)) are used to compute the production losses, which are translated into revenue losses using the contribution margins (step 3 c)). The computations can be done effectively with matrices, see Section 7.4.

3 e) *Estimate revenue loss due to each utility*
For on/off production modeling without buffer tanks, the utility availabilities can be used to estimate the direct and total revenue loss caused by each utility. The utility availabilities (step 2 a)) and the flows to the market (step 3 b)) are used to compute the direct production losses, which are translated into direct revenue losses using the contribution margins (step 3 c)). For the computation of the total revenue losses due to each utility, information on the connection of areas (step 1 a)) and which utilities that are required at each area (step 1 c)) is also needed. The computations can be done effectively with matrices, see Section 7.5.

Step 4: Reduce Revenue Loss due to Future Disturbances in Utilities

When using on/off production modeling without buffer tanks, no reactive disturbance management strategies are obtained. However, the method does give information on for which utility it would be most profitable to take actions to use proactive disturbance management, i.e. for which utilities it is most important to prevent future disturbances. It can also be estimated how much the site availability or area availabilities could be increased if the availability of a utility could be increased with a certain percentage. Alternatively, the decrease of revenue loss for the site or for a certain product can be estimated for a certain improvement of the availability of a utility.

6.4 UDM Method: On/Off including Buffer Tanks

Step 1, 2, and step 3 a) to 3 c) are performed as described in Section 6.2. Including buffer tanks between areas gives more degrees of freedom compared to on/off production modeling without buffer tanks. The prioritization of areas at the occurrence of a disturbance now becomes important. This is discussed further in Section 4.4 and in the descriptions of step 3 and step 4 in this section.

Step 3: Estimate Revenue Loss due to Disturbances in Utilities

3 d) *Estimate revenue loss for each product*
The direct revenue loss of each product is the same as for on/off production modeling without buffer tanks. Computation of this loss is handled in Section 7.4. The total revenue loss of each product might be smaller than for on/off modeling without buffer tanks, since the buffer tanks may be used to avoid shutdown of downstream areas due to upstream failures. For areas with more than one downstream area, a decision must be taken regarding which areas that should be prioritized when the available buffer volume is not enough to provide all areas during the entire disturbance duration. The actual decisions, taken by the operators at the site at the occurrences of the disturbances, are often not known if looking at long time-periods backwards in time, since many circumstances affect which area that should be shut down first. Also, if the site does not have on/off production, areas would not have to be shut down entirely due to a small utility disturbance. In that case it would probably be enough to reduce the production in one or more areas instead. To get an estimate of the revenue loss for the selected time period, the suggestion is to apply the same decision rule at each disturbance. The decision regarding the order in which areas should be shut down could be based on a measure of profitability of the different areas. Possible measures of profitability could be profit per time unit or profit per quantity of produced product. The indirect revenue loss of each product is estimated by considering downstream (or upstream and downstream) effects of all disturbances in utilities in each area during the time-period, taking into account that some disturbance times may be reduced by utilizing the buffer tanks. The total revenue loss of each product is the sum of the direct and indirect revenue loss.

3 e) *Estimate revenue loss due to each utility*
Disturbances in different utilities affect areas at the site according to the table or matrix that is produced in step 1 c). Disturbances in utilities that affect an area upstream of a buffer tank, but not all downstream areas of the tank can be handled using the available volume of the buffer tank. Downstream areas might

or might not be able to run during the entire failure, depending on the flows that are demanded by these areas, the duration of the disturbance, and the level of the buffer tank at the occurrence of the disturbance. As in step 3 d), a decision must be taken on which areas that should be prioritized when the available buffer volume is not enough to provide all areas during the entire disturbance duration. A system with three areas downstream of a buffer tank is shown in Figure 6.1.

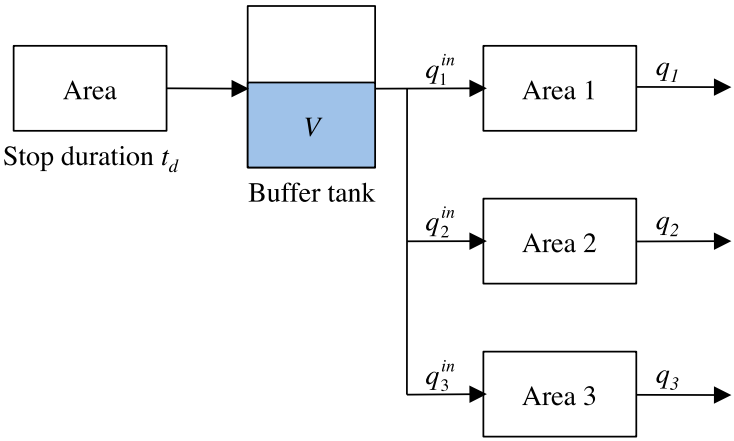

Figure 6.1 Buffer tank with one upstream and three downstream areas.

For estimation of the indirect revenue loss due to each utility, start by ordering the areas from lowest to highest profitability. Consider N areas downstream of a buffer tank. These areas are numbered corresponding to profitability, such that area 1 has the highest profitability, and area N has the lowest profitability. The maximum production of area i is denoted q_i for $i = 1..N$. Since on/off modeling is considered, the production in area i will always be q_i or 0. For a disturbance of duration t_d upstream of the buffer

tank, the optimal control of the product flow given this modeling approach is to run area i for t_i time units, where t_i is given by

$$t_i = \max\left(0, \min\left(t_d, \frac{V - t_d \sum_{k=1}^{i-1} q_k^{in}}{q_i}\right)\right) \tag{6.1}$$

for areas $i = 1..N$ downstream of the buffer tank, where V is the volume of the buffer tank at the beginning of the disturbance, and q_k^{in} the demanded inflow to area k at maximum production. If the demanded inflows to all areas are not directly available, they may be acquired from the maximum productions via a conversion factor.

A buffer tank can also be used for disturbances downstream of the tank. In this case, the ullage of the buffer tank is used to ensure that areas upstream of the buffer tank can run when having a disturbance downstream. At a disturbance of duration t_d downstream of a buffer tank, the optimal control of the product flow with on/off production is to run area i upstream for t_i time units, where t_i is given by

$$t_i = \max\left(0, \min\left(t_d, \frac{V_{tot} - V - t_d \sum_{k=1}^{i-1} q_k^{in}}{q_i}\right)\right) \tag{6.2}$$

for areas $i = 1..N$ upstream of the buffer tank, where V_{tot} is the total volume of the buffer tank, which makes $V - V_{tot}$ the non-filled volume of the tank.

The direct revenue loss that is caused by each utility is the same as for on/off production modeling without buffer tanks, thus it can be computed according to Section 7.5. The direct revenue loss caused by utility u is denoted j_u^d.

The indirect revenue loss can be reduced by utilizing the buffer tanks between areas. If only downstream effects of disturbances

are considered, the indirect revenue loss j_u^{id} caused by utility u is estimated as

$$j_u^{id} = \sum_{t_d} \sum_{i} (t_d - t_i) q_i^m p_i \tag{6.3}$$

for all areas i downstream of buffer tanks, and all disturbance durations t_d on that utility. The time t_i that area i can run at each disturbance is given by (6.1). p_i denotes the contribution margin for product i in the unit profit/volume, and q_i^m the flow to market of product i at maximum production. If desired, the losses due to upstream effects of disturbances can be estimated in the same manner.

Summarizing both direct revenue losses and indirect losses at buffer tanks we get the total loss that is caused by each utility,

$$j_u^{tot} = j_u^d + j_u^{id} \tag{6.4}$$

The array with the total losses due to utilities is thus given by

$$J_u^{tot} = \begin{bmatrix} j_1^{tot} & j_2^{tot} & \dots & j_n^{tot} \end{bmatrix}^T \quad \text{for utilities } 1..n \tag{6.5}$$

Step 4: Reduce Revenue Loss due to Future Disturbances in Utilities

In addition to the proactive disturbance management strategies that are obtained when using on/off production modeling without buffer tanks, two strategies for reducing the revenue loss due to disturbances in utilities are provided when including buffer tanks. The first is to choose good stationary buffer tank levels (proactive); the second to control the product flow properly at the occurrence of a disturbance (reactive). These two alternatives are discussed further below.

Choice of Buffer Tank Levels Good choices of stationary buffer tank levels can ensure that the site can run even at a failure in one or more areas. If considering disturbances both upstream and downstream of the buffer tank, both low and high limits will be imposed on the level of the buffer tank. If only considering disturbances upstream, there will be a direct trade-off between handling as many failures as possible and minimizing inventory costs at the site.

The disturbances that have to be considered for the choice of buffer tank levels are the disturbances that cause the indirect revenue losses (see step 3 e)). To decide which disturbance durations that should be able to be handled, a stop length histogram could be useful. A percentage of disturbances that should be handled may be chosen, e.g. 90 % of all disturbances in a utility. This might be useful since the longest disturbance durations often correspond to very rare disturbances. Stop length histograms are discussed further in Section 4.4.

Control of the Product Flow At the occurrence of a disturbance, a decision must be taken on how to control the product flow if the area that suffers a failure has more than one downstream[1] or upstream[2] area. For simplicity, disturbances upstream of buffer tanks are hereafter discussed. If areas are modeled as on/off, the decision of how to control the product flow concerns choosing if one or more downstream areas should be shut down, and when to shut down these areas. How many areas that have to be shut down and for how long they have to be shut down depends on the demanded inflows of the areas, the buffer volume at the occurrence of the disturbance, and the disturbance duration. The suggestion is to estimate the duration of a disturbance when it occurs and use the strategy in (6.1), where t_d is now the estimated disturbance duration, t_{est}. The disturbance duration could for example be estimated using knowledge of operators at the site, or the duration could be estimated as the most probable disturbance duration for the concerned utility. The times that are given by (6.1) should be thought of as guidelines to the operators. If the buffer tank is large enough for the buffer tank to be able to provide all areas during the entire disturbance, $t_i = t_{est}$ for all i, the operator knows that no areas will have to be shut down due to the disturbance, if the disturbance duration does not become longer than t_{est}.

The *estimated* revenue loss is given by (6.3)-(6.5) using the estimated disturbance duration and the selected product flow control strategy. The *actual* revenue loss depends on the actual disturbance duration. If the estimated duration of the disturbance changes, the optimal control of the product flow can be recomputed using the new

[1]For disturbances upstream
[2]For disturbances downstream

estimate of the disturbance duration and the current volume in the buffer tank at the time for recomputation.

Over time, contribution margins for different products could change, which makes it necessary to change the prioritization order of areas. Also, the order can be chosen differently depending on what is the most suitable measure of profitability at the site. Measures that could be used are profit/volume or profit/time. If it is known beforehand what the buffer tank levels will be at the occurrence of the disturbance, the product flow control that minimizes the revenue loss can be determined for each case specifically.

6.5 Discussions

Simplicity vs. Accuracy

The level of detail of the model of the site determines the level of detail of the strategies for minimizing the revenue loss that are given by the UDM method. When choosing modeling approach for the site, there is a trade-off between simplicity and accuracy of the results. This makes different modeling approaches suitable for different situations. For cases when modeling effort and time is limited, the on/off approach without buffer tanks might be a good choice, whereas if a detailed reactive strategy for how to handle disturbances in utilities should be developed, continuous production modeling might be required. The suggestion in [Morris, 1967] is to start with a simple model, and step by step work towards more elaborate models. In this case, this means starting with the simple on/off approach to get a broad view of which utilities that causes the largest revenue losses at the site, and then work successively towards the more elaborate modeling approaches to be able to develop better strategies for utility disturbance management.

Recomputation of Revenue Losses

One advantage with the UDM method is that the estimate of the revenue loss due to disturbances in utilities can be computed over any period of time. After having used the method one time, the needed information about the site is acquired, and thus the method can be

applied for other time periods at a minimal cost. It might be useful to recompute the results after a time period where adjustments have been made, for example in terms of maintenance or acquisition of additional equipment, to see if the adjustments had the desired effect on the revenue losses. Consider the case when adjustments have been made to improve the availability of the utility that showed to cause the largest revenue loss at the first performance of the method. If recomputation shows that another utility now gives the largest loss, the adjustments has given the desired effect and the focus can be put on improving the availability of the utility that at this performance of the method showed to cause the largest loss.

Possible Improvements of the UDM Method

Improvements of the UDM method could be made that are not directly connected to the choice of modeling approach. Some of them are listed here.

Start and Stop Costs At a real site, shutting down production areas is often undesirable because of large costs for shutting down and starting up areas. The costs could originate from poor product quality at startup, large need for raw materials and utilities at startup, as well as from the time it takes to start up the area after a disruption. Independently of which modeling approach that is selected for modeling the site with respect to utilities, start and/or stop costs for areas may be included in the problem formulation. Currently, start and stop costs of areas are not included in the UDM method.

Different Disturbance Limits for Different Areas In the UDM method, the same disturbance limits are used for a utility at all areas at a site. However, if different areas have very different demands of the operation of a utility, it might be advantageous to set different disturbance limits for different areas. A drawback with this approach is that the measure of utility availability becomes area dependent, which makes the measure less intuitive, and also makes the computations of utility availabilities less straightforward. This is the reason for working with the same disturbance limits for all areas in this thesis.

More Elaborate Modeling of Flows to the Market In this thesis, the flows to the market are estimated using the maximum productions

of all areas at the site. This is an approach used to avoid the fact that the actual flows to market often varies a lot over time, especially if looking at time-periods of several years. However, modeling the flows to the market more accurately is an option for refining the UDM method. Another solution is to keep track of the actual sales at each time instant at the site that is studied, which eliminates the need for estimating the flows to the market.

Continuous Production Modeling – Initial Findings

For continuous production modeling, there are two relations that have to be modeled; the effect of disturbances in utilities on production and the effect of reduced production in one area on other areas. How to model these two relations are discussed below.

Effects of Disturbances in Utilities on Production A first approach for modeling the effect of utilities on production is to assume a simple relation between utility operation and production in an area, inspired by the physical properties of the utility and measurement data. The cooling water is chosen as an example. In Figure 6.2, the maximum average production of an area at an industrial site is plotted as a function of the cooling water temperature. The assumption when identifying possible disturbances in the cooling water utility in

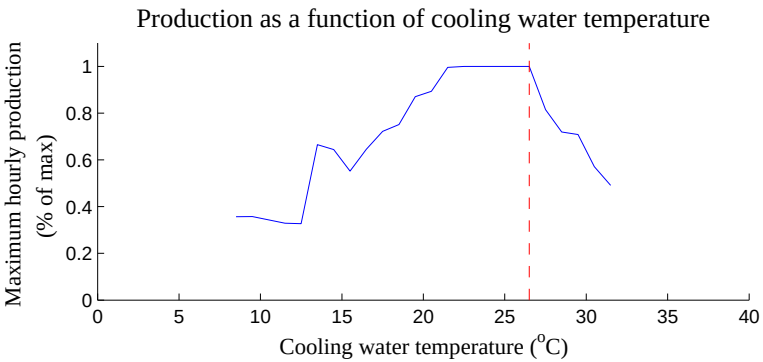

Figure 6.2 Maximum average production at an industrial site as a function of cooling water temperature.

Section 4.2 was that too cold cooling water does not affect the possible maximum production. If sticking with this assumption, the problem breaks down to finding a relation between the maximum possible production and cooling water temperatures over a critical limit. Based on this assumption, and on the data of Figure 6.2, the simple utility-production relations of Figure 6.3 can be formulated. The relations could be e.g. linear (as in the leftmost subfigure) or piecewise linear (as in the middle subfigure).

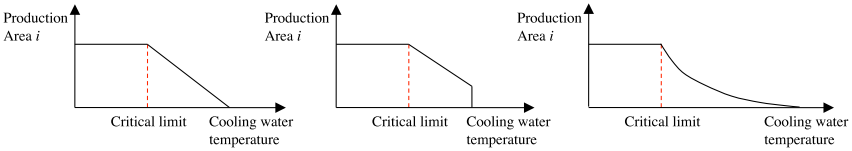

Figure 6.3 Possible models for the effects of cooling water temperature on production.

Connections of Areas via the Product Flow For the relations between production in different areas, a first approach might be similar to the one described for the direct relation between utilities and production. However, combining the effects of disturbances in utilities with the area connections might be cumbersome. This is illustrated by an example: Assume that two areas, area 1 and 2, are connected by the product flow, as in Figure 6.4. Assume that the cooling water

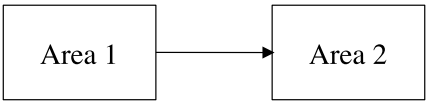

Figure 6.4 Two areas connected by the product flow.

utility affects both area 1 and area 2. If area 1 is forced to reduce its production to 80 % and area 2 to 70% because of a disturbance in the cooling water utility. Area 2 is affected by the disturbance both directly, and indirectly because of the disturbance in area 1, which delivers raw material to area 2. What limits the production of area 2 could be either the lack of raw materials (due to reduced production in area 1), or the cooling water temperature.

In addition, many utilities may be shared among areas, such that a shutdown of one area that requires the utility enables another area, which also requires the utility, to run instead. For example, the cooling water at a site gives a certain cooling effect that is shared by all areas that use cooling water. One area that is important to keep running might be able to get its required cooling effect at the expense of shutting down one or more other areas.

These discussions illustrate the complexity of the problem, which motivates the need for simple models that can be refined and extended one step at a time.

7

UDM Calculations

In this chapter, matrix representations and calculations that simplify use of the UDM method are presented. In the first section, a convenient representation of the areas and utilities of a site is presented. This representation is used in the following sections to compute utility availability, area availability and estimates of the revenue losses due to utilities. A simple site with four areas and five utilities is shown in Figure 7.1. This site is used as an example throughout the chapter. A summary of the notation used in the chapter is given at the end of the thesis.

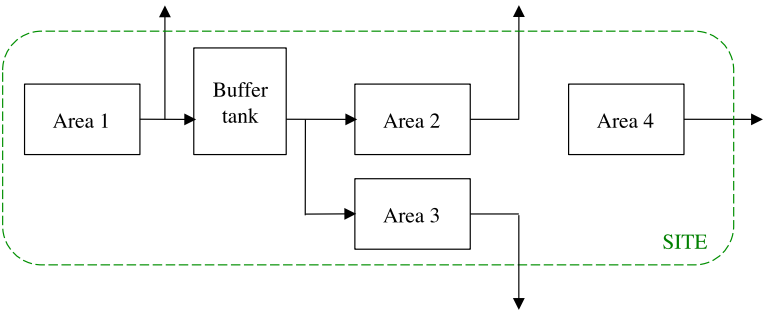

Figure 7.1 Product flow at the example site.

7.1 Representation of Utilities at a Site

Site Structure

As described in Section 2.1, a site consists of one or more production areas. Some areas produce intermediate products that are refined to end products in other areas, so that the product of an area is the raw material to one or more other areas. This gives interdependence of areas that can be described by an area dependence matrix, where a one at row i and column j means that area i obtains raw material from area j. A zero means that the areas are independent. All areas are assumed to be dependent on themselves, which gives ones on the diagonal of the matrix. The area dependence matrix A_d will have the size $n_a \times n_a$, where n_a is the number of areas at the site.

Additional information about the site that is required in order to complete all calculations of this section is the flows to the market of all products at maximum production, q^m, and the contribution margins of all products, p. Both q^m and p are column vectors, with the elements ordered in the same order as the areas in the area dependence matrix.

Utility Measurement Data

Measurement data of utility parameters can be compared to the critical limits for each utility to form arrays where, for each sample, the value is one if the utility works properly, and zero otherwise. These arrays could be row-stacked to obtain the utility operation matrix, U of size $n_u \times n_s$, where n_u is the number of utilities, and n_s the number of samples. The sampling interval is denoted t_s.

Utility Requirements

Every production area requires a specific set of utilities in order to operate correctly. The set of utilities each area requires can be presented in an area-utility matrix, where a one at row i and column j means that area i requires utility j. This matrix is denoted A_u and has n_a rows and n_u columns.

An Example

Site Structure A flowchart of the product flow at the example site is shown in Figure 7.1. Here it can be seen that, in this example, area 2 and 3 are dependent on raw materials from area 1, whereas area 4 is independent with respect to the product flow.
This gives the area dependence matrix

$$A_d = \begin{bmatrix} 1 & 0 & 0 & 0 \\ 1 & 1 & 0 & 0 \\ 1 & 0 & 1 & 0 \\ 0 & 0 & 0 & 1 \end{bmatrix}$$

Utility Measurement Data Assume that the site requires the five utilities: steam, cooling water, electricity, feed water and instrument air. The corresponding utility parameters, that determine if the utility works correctly, are 'pressure' for steam, feed water and instrument air, and 'temperature' for cooling water. Electricity can only be operating or not operating, i.e. 'on' or 'off'. The measurements of the utility parameters during 10 hours with the sampling interval 1 hour are given below

steam =	[42	38	34	32	35	41	40	36	34	37]
coolingwater =	[25	24	24	26	28	30	27	25	24	25]
electricity =	[1	1	1	1	1	1	0	1	1	1]
feedwater =	[22	19	18	20	22	21	21	21	21	21]
instrumentair =	[1	2	1	1	3	2	1	0	0	1]

The disturbance limits that have been set for these utilities at the site are:

Steam :	pressure < 35 bar
Cooling water :	temperature $> 27°$C
Electricity :	on/off
Feed water :	pressure < 20 bar
Instrument air :	pressure ≤ 0 bar

which gives the utility operation matrix

$$U = \begin{bmatrix} 1 & 1 & 0 & 0 & 1 & 1 & 1 & 1 & 0 & 1 \\ 1 & 1 & 1 & 1 & 0 & 0 & 1 & 1 & 1 & 1 \\ 1 & 1 & 1 & 1 & 1 & 1 & 0 & 1 & 1 & 1 \\ 1 & 0 & 0 & 1 & 1 & 1 & 1 & 1 & 1 & 1 \\ 1 & 1 & 1 & 1 & 1 & 1 & 1 & 0 & 0 & 1 \end{bmatrix}$$

Utility Requirements Table 7.1 shows the utilities that are required by each area in this example.

Table 7.1 Utilities required at each area in the example.

	Area 1	Area 2	Area 3	Area 4
Steam	x		x	
Cooling water		x	x	
Electricity	x	x	x	x
Feed water	x		x	
Instrument air	x		x	x

This gives the area-utility matrix

$$A_u = \begin{bmatrix} 1 & 0 & 1 & 1 & 1 \\ 0 & 1 & 1 & 0 & 0 \\ 1 & 1 & 1 & 1 & 1 \\ 0 & 0 & 1 & 0 & 1 \end{bmatrix}$$

7.2 Utility Availability

Using the utility operation matrix defined in Section 7.1, the utility availabilities are obtained, as a column vector U_{av}, by taking the row-sum of the utility matrix and dividing by the number of samples, or equivalently

$$U_{av} = U \cdot \mathbf{1}/n_s \tag{7.1}$$

where $\mathbf{1}$ denotes a column vector of ones.

For the example in Section 7.1, we get

$$U_{av} = \begin{bmatrix} 0.7 & 0.8 & 0.9 & 0.8 & 0.8 \end{bmatrix}^T$$

if it is assumed that there are no planned stops in the data set.

Utility Dependence

Utility dependence was discussed in Section 5.1, where it was represented by a flowchart showing the interdependence of utilities. Utility dependence can also be represented in a matrix, U_d, where a one at row i, column j, means that utility i is dependent on the operation of utility j. A zero means that the utilities operate independently of each other. All utilities are assumed to be dependent on the operation of themselves, which gives ones on the diagonal of the matrix. If utility dependence is considered, the utility operation matrix becomes

$$U_{ud} = \text{sign}\left(U + \text{sign}\left((I - U_d)(U - \mathbf{1}\mathbf{1}^T)\right)\right) \tag{7.2}$$

where $\mathbf{1}$ denotes a column vector of ones, and I is the identity matrix.

A flowchart of the interdependence between the utilities in the example in Section 7.1 is given in Figure 7.2.

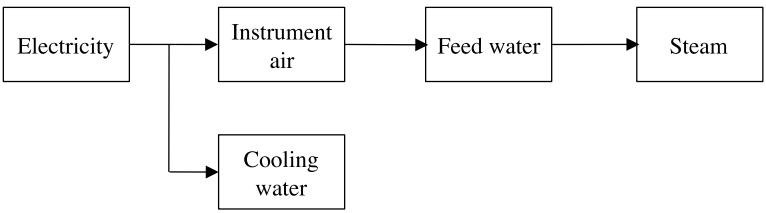

Figure 7.2 Utility dependence flowchart for the utilities in the example.

For these utilities, the utility dependence matrix becomes

$$U_d = \begin{bmatrix} 1 & 0 & 1 & 1 & 1 \\ 0 & 1 & 1 & 0 & 0 \\ 0 & 0 & 1 & 0 & 0 \\ 0 & 0 & 1 & 1 & 1 \\ 0 & 0 & 1 & 0 & 1 \end{bmatrix}$$

with the same ordering of utilities as in Section 7.1. We get the utility operation matrix

$$U_{ud} = \begin{bmatrix} 1 & 1 & 1 & 0 & 1 & 1 & 1 & 1 & 1 & 1 \\ 1 & 1 & 1 & 1 & 0 & 0 & 1 & 1 & 1 & 1 \\ 1 & 1 & 1 & 1 & 1 & 1 & 0 & 1 & 1 & 1 \\ 1 & 0 & 0 & 1 & 1 & 1 & 1 & 1 & 1 & 1 \\ 1 & 1 & 1 & 1 & 1 & 1 & 1 & 0 & 0 & 1 \end{bmatrix}$$

when utility dependence is taken into account. This gives the utility availabilities

$$U_{av}^{ud} = U \cdot \mathbf{1}/n_s = \begin{bmatrix} 0.9 & 0.8 & 0.9 & 0.8 & 0.8 \end{bmatrix}^T$$

7.3 Area Availability

A column vector containing the direct area availabilities of all areas at a site, A_{av}^{dir}, is obtained by

$$A_{av}^{dir} = A_{dir} \cdot \mathbf{1}/n_s \tag{7.3}$$

where

$$A_{dir} = \mathbf{1}\mathbf{1}^T + \text{sign}\left(A_u(U - \mathbf{1}\mathbf{1}^T)\right) \tag{7.4}$$

and the notation from Section 7.1 is used. A_{dir} is denoted the direct area operation matrix. Note that the utility operation matrix without consideration to utility dependence should be used, since the measure

of area availability should describe how the areas actually have operated during a time-period.

The total area availabilities of all areas are given by the column vector A_{av}^{tot}, which is computed as

$$A_{av}^{tot} = A_{tot} \cdot \mathbf{1}/n_s \tag{7.5}$$

where

$$A_{tot} = \mathbf{1}\mathbf{1}^T + \text{sign}\left(A_d(A_{dir} - \mathbf{1}\mathbf{1}^T)\right) \tag{7.6}$$

A_{tot} is denoted the total area operation matrix.

For the example in Section 7.1 we get

$$A_{av}^{dir} = \begin{bmatrix} 0.4 & 0.7 & 0.2 & 0.7 \end{bmatrix}^T$$

and

$$A_{av}^{tot} = \begin{bmatrix} 0.4 & 0.2 & 0.2 & 0.7 \end{bmatrix}^T$$

The direct and indirect effects of disturbances in the example in Section 7.1 are shown in Table 7.2.

Table 7.2 Direct and indirect effects of disturbances in the example.

	Direct effect	Indirect effect
Steam	Area 1, 3	Area 2
Cooling water	Area 2, 3	–
Electricity	Area 1-4	–
Feed water	Area 1, 3	Area 2
Instrument air	Area 1, 3, 4	Area 2

7.4 Estimation of Revenue Loss for each Product

The simplest way of estimating the revenue loss for each product due to utility disturbances is by applying on/off production modeling without buffer tanks. When this approach is used, the estimation of the revenue loss for each product can be computed directly using (7.3) and (7.5) in Section 7.3, and the site representation in Section 7.1. The direct and total revenue losses (J_p^{dir} and J_p^{tot}) become

$$J_p^{dir} = \left(\mathbf{1} - A_{av}^{dir}\right) .* q^m .* p n_s t_s \tag{7.7}$$

$$J_p^{tot} = \left(\mathbf{1} - A_{av}^{tot}\right) .* q^m .* p n_s t_s \tag{7.8}$$

where '.∗' denotes the entry-wise product. Direct and total losses for products are defined in Section 5.3.

7.5 Estimation of Revenue Loss due to each Utility

Estimation of the revenue loss that is caused by each utility is also simply estimated using on/off production modeling without buffer tanks. The direct and total revenue loss due to each utility (J_u^{dir} and J_u^{tot}) are obtained using (7.1) in Section 7.2, with utility dependence taken into account according to (7.2):

$$J_u^{dir} = \operatorname{diag}\left[\mathbf{1} - U_{av}^{ud}\right] \cdot (A_u)^T (q^m .* p) n_s t_s \tag{7.9}$$

$$J_u^{tot} = \operatorname{diag}\left[\mathbf{1} - U_{av}^{ud}\right] \cdot \operatorname{sign}\left(A_d A_u\right)^T (q^m .* p) n_s t_s \tag{7.10}$$

The notation is the same as in Section 7.1 and '.∗' denotes the entry-wise product. Direct and total losses due to utilities are defined in Section 5.3.

8

Case Study

The case study is performed at Perstorp, at their site in Stenungsund, Sweden. In the first section, the enterprise Perstorp and the site in Stenungsund are described. In the following sections, the first two steps of the UDM method are applied to site Stenungsund and the site-model specific steps, step 3 and 4, are described for on/off production modeling without and with buffer tanks. A comparison of the results when using these two different methods is also included. At the end of the chapter, some concluding remarks about the results of the case study are made.

8.1 Perstorp

The products of Perstorp were initially acetic acid and charcoal, when the engineer Wilhelm Wendt started the company in 1881. The name of the company was at that time "Stensmölla Kemiska Tekniska Industri". The production of acetic acid was a success and the company was soon renamed "Skånska Ättiksfabriken" ("The Scania acetic acid plant"). Already in the beginning of the company history, Perstorp's policy to maximize utilization of raw materials and minimize the quantity of waste products was founded. Wilhelm Wendt managed to make the production more efficient and in the process he discovered that there was a possibility to reuse some of the waste products to develop new products.

A major breakthrough in the company's history came in 1907 when

the company managed to produce methanol from beech wood and refine it to formaldehyde. Formaldehyde turned out to be a useful raw material for many other processes and is still an important product at Perstorp. As the years went by the range of formaldehyde-based chemicals produced by Skånska Ättiksfabriken increased rapidly and in 1917 the company also started producing plastics, which made them the first company in Scandinavia to enter this industry.

The next milestone in the history of the company was reached when Skånska Ättiksfabriken started manufacturing the laminate "Perstorpsplattan". The company continued to expand rapidly and in 1955 the first international laminate production began in Brazil. A few years later the company changed its name to Perstorp and was listed on the Stockholm Stock Exchange. This was followed by an extensive local and international expansion in the 1970's and 1980's and Perstorp became a well-known company within the chemical industry. The laminate flooring Pergo was introduced and soon became a global success.

The wide range of products and the rapid expansion eventually made it necessary to concentrate the production to fewer areas to maintain the good quality and cost-effectiveness. Pergo and the plastic division were sold and the focus was concentrated on the specialty chemicals. Today Perstorp is a worldwide enterprise that is a world leader in several sectors of the specialty chemicals market. Some of their main product groups are polyols, organic acids, esters and isocyanates. Their products can be found in for example automotive, food, packaging and electronics applications. Perstorp is controlled by the French company PAI Partners and has about 2200 employees and production in 11 countries all over the world, see Figure 8.1.

The information about Perstorp in this section is collected from [Perstorp, 2011] and [Rahmberg, 2006], where also further information about the company and their products is available.

Site Stenungsund

Site Stenungsund is located on the Swedish west coast, approximately 50 km north of Gothenburg. The main products are aldehydes, organic acids, alcohols and plasticizers [Perstorp, 2011]. A picture of the site in Stenungsund is shown in Figure 8.2.

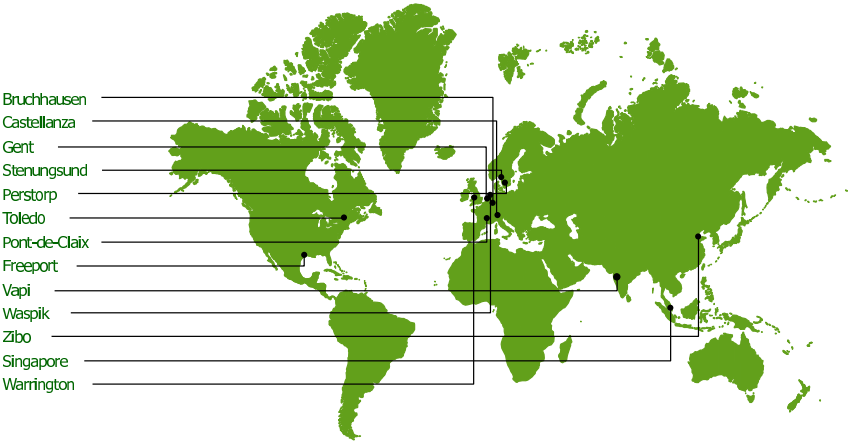

Figure 8.1 Perstorp sites around the world.

Figure 8.2 Site Stenungsund.

8.2 How to use UDM at Perstorp

Perstorp is interested in both proactive and reactive disturbance management strategies (see Section 4.3). The proactive strategies may serve as input for decision making, for example for decisions on where maintenance efforts should be focused. However, the future goal is to develop more elaborate reactive strategies that give guidelines for operators on how to run the site at the occurrence of different utility disturbances.

8.3 Step 1 and 2 of the UDM Method

Step 1: Get Information on Site-structure and Utilities

a) *Depict the overall structure of the site*

Site Stenungsund is one of 13 sites owned by the enterprise Perstorp. The site consists of 10 production areas. The products of the 10 areas at the site are here denoted product 1-10 for area 1-10 respectively. The role based equipment hierarchy is shown in Figure 8.3. Internal buffer tanks exist for products 1-5. Their location and the interdependence of areas can be seen in the flowchart of the product flow at the site in Figure 8.4. The area dependence matrix becomes

$$A_d = \begin{bmatrix} 1 & 0 & 0 & 0 & 0 & 0 & 0 & 0 & 0 & 0 \\ 0 & 1 & 0 & 0 & 0 & 0 & 0 & 0 & 0 & 0 \\ 0 & 0 & 1 & 0 & 0 & 0 & 0 & 0 & 0 & 0 \\ 1 & 0 & 0 & 1 & 0 & 0 & 0 & 0 & 0 & 0 \\ 1 & 0 & 0 & 0 & 1 & 0 & 0 & 0 & 0 & 0 \\ 1 & 1 & 0 & 0 & 0 & 1 & 0 & 0 & 0 & 0 \\ 0 & 0 & 1 & 0 & 0 & 0 & 1 & 0 & 0 & 0 \\ 1 & 0 & 0 & 1 & 0 & 0 & 0 & 1 & 0 & 0 \\ 1 & 0 & 0 & 0 & 1 & 0 & 0 & 0 & 1 & 0 \\ 0 & 0 & 0 & 0 & 0 & 0 & 0 & 0 & 0 & 1 \end{bmatrix} \tag{8.1}$$

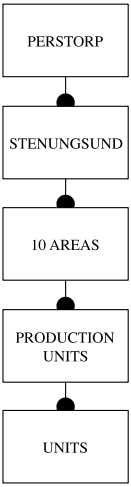

Figure 8.3 Equipment hierarchy at site Stenungsund.

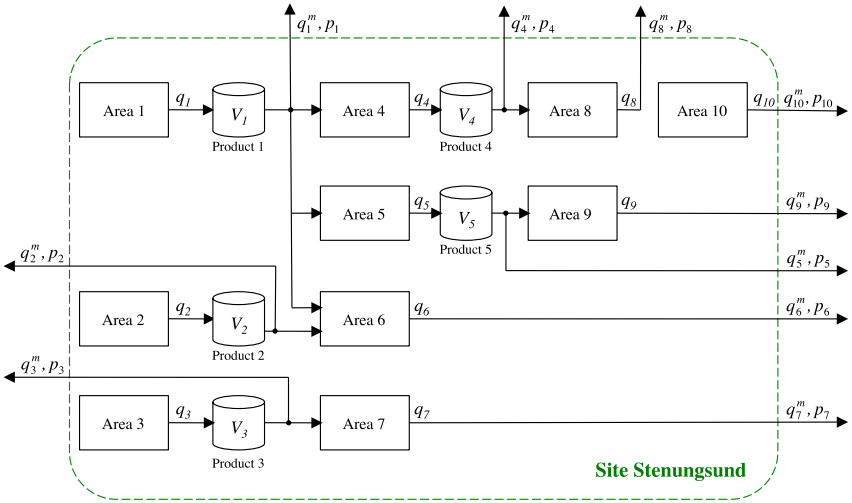

Figure 8.4 Flowchart of the product flow at site Stenungsund.

b) *List all utilities used at the site*
Site Stenungsund has all utilities listed in Section 3.1.

- **Steam**
  There are two steam nets at the site, one with high pressure steam, ideally 41 bar, and one with middle pressure steam, ideally 14 bar.

- **Cooling water**
  There is one cooling water network that supplies all areas with cooling water. Area 1, 2, 3 and 7 have cooling fans in addition to ordinary cooling water.

- **Electricity**
  Site Stenungsund uses both 130 kV and 40 kV electricity. A list of disturbances in electricity is provided by the supplier.

- **Fuel**
  Fuel is not included as a utility in this case study. However, the effects of fuel being unavailable will show up in measurements of other utilities, for example steam.

- **Water treatment**
  To the water treatment utility (WTU) there are incoming flows of Waste Water Clean (WWC), Waste Water Dirty (WWD) and Waste Water Process (WWP). WWC is clean water from the boilers, WWD water from precipitation and WWP water yielded or used in the process. There are monthly limits for how large amounts of suspended material (SUSP) and dissolved organic carbon (DOC) that are allowed in the outgoing water, that should not be exceeded. There are also more strict limits for how much of these substances that are allowed in the outgoing water each year. If the yearly limits are exceeded, the site has to be shut down immediately. The monthly and yearly limits are individual for each production site. In this case study, only the yearly limits are considered.

- **Combustion of tail gas**
  The site contains a flare and there are also three areas, area 7, 8 and 9, that have devices for local combustion of tail gas at normal operation. However, measurements are only available for the combustion devices at area 7 and area 9, why the combustion device at area 8 will not be considered in this case study.

- **Nitrogen**
  Nitrogen is used to maintain pressure in vessels.

- **Water**
  Both feed water, washing water and fire protection water are used at the site, but only feed water will be considered in this case study.

- **Compressed air**
  Compressed air could be both process air and instrument air. At site Stenungsund only instrument air is used.

- **Vacuum system**
  The vacuum systems are individual for each area.

c) *Determine which utilities that are required at each area*
A table showing which utilities that are needed at each area is presented in Table 8.1. Some utilities have been divided into sub-utilities to give a more specific view of what causes the largest revenue losses; the steam utility has been divided into high pressure (HP) steam and middle pressure (MP) steam, the cooling water utility into cooling water and cooling fans and combustion of tail gas into flare and devices for combustion of tail gas at normal operation (here denoted 'combustion devices').

Table 8.1 Utilities needed at areas at site Stenungsund.

	1	2	3	4	5	6	7	8	9	10
Steam HP							x	x	x	x
Steam MP	x	x	x	x	x	x	x		x	
Cooling water	x	x	x	x	x	x	x	x	x	x
Cooling fans	x	x	x				x			
Electricity	x	x	x	x	x	x	x	x	x	x
Water treatment	x	x	x	x	x	x		x	x	
Flare	x	x	x	x	x	x				x
Combustion devices							x	x	x	
Nitrogen	x	x	x	x	x	x	x	x	x	x
Feed water	x	x	x	x	x			x		
Compressed air	x	x	x	x	x	x	x	x	x	x
Vacuum system	x	x	x	x	x	x	x	x	x	x

The area-utility matrix becomes

$$A_u = \begin{bmatrix} 0 & 1 & 1 & 1 & 0 & 0 & 0 & 1 & 1 & 1 & 0 & 0 & 1 & 1 & 1 \\ 0 & 1 & 1 & 0 & 1 & 0 & 0 & 1 & 1 & 1 & 0 & 0 & 1 & 1 & 1 \\ 0 & 1 & 1 & 0 & 0 & 1 & 0 & 1 & 1 & 1 & 0 & 0 & 1 & 1 & 1 \\ 0 & 1 & 1 & 0 & 0 & 0 & 0 & 1 & 1 & 1 & 0 & 0 & 1 & 1 & 1 \\ 0 & 1 & 1 & 0 & 0 & 0 & 0 & 1 & 1 & 1 & 0 & 0 & 1 & 1 & 1 \\ 0 & 1 & 1 & 0 & 0 & 0 & 0 & 1 & 1 & 1 & 0 & 0 & 1 & 0 & 1 \\ 1 & 1 & 1 & 0 & 0 & 0 & 1 & 1 & 0 & 0 & 1 & 0 & 1 & 0 & 1 \\ 1 & 0 & 1 & 0 & 0 & 0 & 0 & 1 & 1 & 0 & 0 & 0 & 1 & 1 & 1 \\ 1 & 1 & 1 & 0 & 0 & 0 & 0 & 1 & 1 & 0 & 0 & 1 & 1 & 0 & 1 \\ 1 & 0 & 1 & 0 & 0 & 0 & 0 & 1 & 0 & 1 & 0 & 0 & 1 & 0 & 1 \end{bmatrix} \quad (8.2)$$

where utilities are ordered: HP steam, MP steam, cooling water, cooling fan area 1, cooling fan area 2, cooling fan area 3, cooling fan area 7, electricity, water treatment, combustion device area 7, combustion device area 9, nitrogen, feed water, instrument air.

The ten vacuum systems and the flare have been left out in the A_u matrix to reduce the size of the matrix and make the problem more transparent. Both the vacuum systems and the flare have been available 100 % of the time during the considered time-period.

d) *Draw a utility dependence flowchart*
The interdependence of utilities at site Stenungsund are shown in Figure 8.5. This gives the utility dependence matrix

$$U_d = \begin{bmatrix} 1 & 0 & 0 & 0 & 0 & 0 & 0 & 1 & 0 & 0 & 0 & 0 & 1 & 1 \\ 0 & 1 & 0 & 0 & 0 & 0 & 0 & 1 & 0 & 0 & 0 & 0 & 1 & 1 \\ 0 & 0 & 1 & 0 & 0 & 0 & 0 & 1 & 0 & 0 & 0 & 0 & 0 & 0 \\ 0 & 0 & 0 & 1 & 0 & 0 & 0 & 1 & 0 & 0 & 0 & 0 & 0 & 0 \\ 0 & 0 & 0 & 0 & 1 & 0 & 0 & 1 & 0 & 0 & 0 & 0 & 0 & 0 \\ 0 & 0 & 0 & 0 & 0 & 1 & 0 & 1 & 0 & 0 & 0 & 0 & 0 & 0 \\ 0 & 0 & 0 & 0 & 0 & 0 & 1 & 1 & 0 & 0 & 0 & 0 & 0 & 0 \\ 0 & 0 & 0 & 0 & 0 & 0 & 0 & 1 & 0 & 0 & 0 & 0 & 0 & 0 \\ 0 & 0 & 0 & 0 & 0 & 0 & 0 & 1 & 1 & 0 & 0 & 0 & 0 & 1 \\ 0 & 0 & 0 & 0 & 0 & 0 & 0 & 1 & 0 & 1 & 0 & 0 & 0 & 1 \\ 0 & 0 & 0 & 0 & 0 & 0 & 0 & 1 & 0 & 0 & 1 & 0 & 0 & 1 \\ 0 & 0 & 0 & 0 & 0 & 0 & 0 & 1 & 0 & 0 & 0 & 1 & 0 & 0 \\ 0 & 0 & 0 & 0 & 0 & 0 & 0 & 1 & 0 & 0 & 0 & 0 & 1 & 1 \\ 0 & 0 & 0 & 0 & 0 & 0 & 0 & 1 & 0 & 0 & 0 & 0 & 0 & 1 \end{bmatrix} \tag{8.3}$$

e) *Define the disturbance limits for each utility*
The disturbance limits for disturbances in utilities at site Stenungsund are listed below.

- **Steam**
  - Pressure in high-pressure steam net below 33 bar
  - Pressure in high-pressure steam net over 45 bar
  - Pressure in middle-pressure steam net below 12 bar

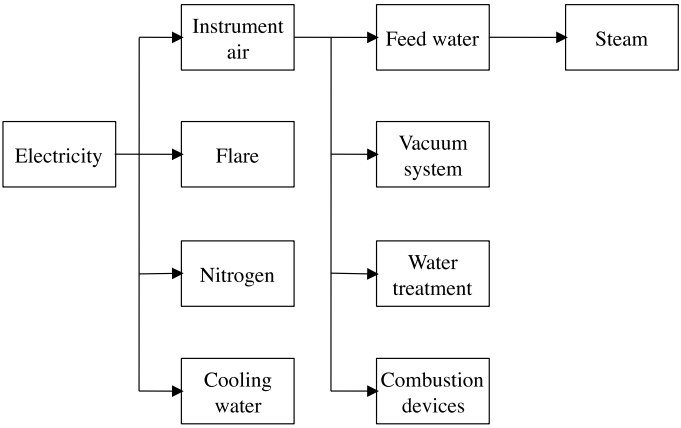

Figure 8.5 Utility dependence flowchart for site Stenungsund.

- **Cooling water**
  - Cooling water temperature higher than 27°C
  - Temperature of water cooled by cooling fans in area 1, 2 or 3 higher than 70°C
  - Temperature of water cooled by cooling fan in area 7 higher than 65°C
  - Loss of cooling water flow
- **Electricity**
  - Voltage below 99 % of normal voltage for 40 kV electricity
  - Voltage below 99 % of normal voltage for 130 kV electricity
  - Loss of low voltage electricity
  - Loss of electricity
- **Water treatment**
  - Amount of SUSP in outgoing water more than 4000 kg a year
  - Amount of DOC in outgoing water more than 4000 kg a year

- **Combustion of tail gas**
  - Flare flame goes out.
  - Failure of combustion device at area 7
  - Failure of combustion device at area 8
  - Failure of combustion device at area 9
- **Nitrogen**
  - Pressure in main nitrogen pipe less than 21 bar
- **Water**
  - Pressure in main feed water pipe less than 20 bar
- **Compressed air**
  - Zero pressure of instrument air
- **Vacuum system**
  - Loss of vacuum system in any area

f) *Get relevant measurement data*
The time period from August 1, 2007 to July 1, 2010 is considered. Data for all utility parameters that are considered is available for this time period. Measurement data is compared to the disturbance limits defined in step 1 e) to produce the utility operation matrix, U.

g) *List all planned stops during the time period*
There has been one planned stop during the time period, from September 15 to October 8, 2009. Data from this time period is removed from the utility operation matrix, U.

Step 2: Compute Utility and Area Availabilities

a) *Compute utility availabilities*
Since all needed measurements are available, availabilities for all utilities can be computed according to (7.1). Utility dependence according to (8.3) is taken into account. The results presented in Table 8.2 are obtained for the selected time-period. In the table, utilities are sorted according to availability, in descending order.

Table 8.2 Utility availabilities at site Stenungsund.

Utility	**Availability** (%)
Flare	100.00
Vacuum systems	100.00
Water treatment	100.00
Instrument air	99.98
Cooling fan area 7	99.88
Nitrogen	99.87
Electricity	99.28
Feed water	98.91
HP steam	98.55
Cooling fan area 1	96.82
Cooling fan area 2	96.82
Cooling fan area 3	96.82
MP steam	96.76
Combustion area 9	96.06
Combustion area 7	94.18
Cooling water	92.33

b) *Compute direct and total area availabilities*

The direct and total area availabilities are computed according to (7.3) and (7.5) respectively, using (8.1), (8.2), and the utility operation matrix. The resulting area availabilities are listed in Table 8.3.

Table 8.3 Availabilities of areas at site Stenungsund.

Area	Direct availability (%)	Total availability (%)
1	84.45	84.45
2	84.45	84.45
3	84.45	84.45
4	87.24	84.45
5	87.24	84.45
6	87.24	84.45
7	82.37	80.27
8	89.03	83.71
9	83.99	81.46
10	89.60	89.60

8.4 Step 3 and 4: On/Off without Buffer Tanks

Step 3: Estimate Revenue Loss due to Disturbances in Utilities

a) *Select site model*

The on/off production modeling approach without buffer tanks is used for modeling the site. Only downstream effects of disturbances are considered.

b) *Estimate flow to the market of each product*

The maximum production rates of each product at the site are available, but not the corresponding inflows to all areas. The inflows are estimated from the maximum production in the areas via a conversion factor, denoted $y_{i,j}$ for the conversion between product i and j. The conversion factors have been obtained from

personnel at the site. An estimation of the flows to the market becomes

$$q_1^m = \max(0, q_1 - q_4 y_{14} - q_5 y_{15} - q_6 y_{16}) \tag{8.4}$$
$$q_2^m = \max(0, q_2 - q_6 y_{26}) \tag{8.5}$$
$$q_3^m = \max(0, q_3 - q_7 y_{37}) \tag{8.6}$$
$$q_4^m = \max(0, q_4 - q_8 y_{48}) \tag{8.7}$$
$$q_5^m = \max(0, q_5 - q_9 y_{59}) \tag{8.8}$$
$$q_i^m = q_i, \quad i = 6,7,8,9,10 \tag{8.9}$$

where q_i is the maximum production rate of area i in the unit volume/time. The flows to market are stored in the array

$$q^m = \begin{bmatrix} q_1^m & q_2^m & q_3^m & q_4^m & q_5^m & q_6^m & q_7^m & q_8^m & q_9^m & q_{10}^m \end{bmatrix}^T$$

c) *Get contribution margins for each product*
Contribution margins for all products at the site are available and are stored in the array

$$p = \begin{bmatrix} p_1 & p_2 & p_3 & p_4 & p_5 & p_6 & p_7 & p_8 & p_9 & p_{10} \end{bmatrix}^T$$

where p_i is the contribution margin of area i in unit profit/volume.

d) *Estimate revenue loss for each product*
The direct and total revenue loss corresponding to each product is estimated using (7.7) and (7.8) respectively. In Table 8.4, the products are ordered according to the direct and total loss of revenue they cause, in descending order.

e) *Estimate revenue loss due to each utility*
The direct and total revenue loss that is caused by each utility is computed using (7.9) and (7.10) respectively. In Table 8.5, the utilities are ordered according to the direct and total revenue loss they cause, in descending order.

Table 8.4 Products ordered according to the revenue loss they cause.

Direct loss	Total loss
Product 9	Product 9
Product 1	Product 1
Product 6	Product 6
Product 7	Product 7
Product 8	Product 8
Product 10	Product 4
Product 4	Product 10
Product 3	Product 3
Product 2	Product 2
Product 5	Product 5

Step 4: Reduce Revenue Loss due to Future Disturbances in Utilities

From step 3 e), it can be concluded that the cooling water utility seems to have caused the largest revenue loss over the selected time period. With on/off modeling, we get no reactive disturbance management strategies that tell us how the product flow should be controlled at future disturbances in utilities. However, the method does give a hint on which utilities that it would be most profitable to increase the availabilities of. For example, to include redundancy in the cooling water system might increase the availability, and thus give a reduction of the revenue loss due to the cooling water utility. Even a small increase of the availability might give a large reduction of the total revenue loss that the utility causes at the site.

An interesting result that can be seen in step 3 d) in the case study is that the area with the lowest direct and total area availability is area 7, whereas the product that stands for the largest direct and total revenue loss is product 9, produced in area 9. Thus it can be seen that it cannot be concluded directly from the area availabilities which product that stands for the largest revenue loss.

Table 8.5 Utilities ordered according to the revenue loss they cause.

Direct loss	**Total loss**
Cooling water	Cooling water
MP steam	MP steam
Combustion device 9	Cooling fan 1
Combustion device 7	Feed water
Cooling fan 1	Combustion device 9
Electricity	Combustion device 7
HP steam	Electricity
Feed water	HP steam
Nitrogen	Cooling fan 2
Cooling fan 3	Cooling fan 3
Cooling fan 2	Nitrogen
Instrument air	Instrument air
Cooling fan 7	Cooling fan 7
Flare	Flare
Vacuum system	Vacuum system
Water treatment	Water treatment

8.5 Step 3 and 4: On/Off including Buffer Tanks

Step 3: Estimate Revenue Loss due to Disturbances in Utilities

3 a) *Select site model*
The on/off production modeling approach including buffer tanks is used for modeling the site. Only downstream effects of disturbances are considered. When using this approach, buffer tanks correspond to pure delays from when an area upstream of a buffer tank suffers a disturbance and becomes unavailable, until when areas downstream of the buffer tank have to stop producing.

3 b) *Estimate flow to the market of each product*
The maximum production rates of each product at the site are available. The estimates of the flows to the market are the same as for on/off production without buffer tanks, and are thus given by (8.4)-(8.9).

3 c) *Get contribution margins for each product*
Contribution margins for all products are available. The contribution margin for product i in profit/volume is denoted p_i.

3 d) *Estimate revenue loss for each product*
The direct revenue loss of each product is the same as for on/off production modeling without buffer tanks, and is thus given by (7.7). The estimate of the total revenue loss of each product might be smaller than for on/off production without buffer tanks, since the buffer tanks may be used to avoid shutdown of downstream areas due to downstream failures. If the buffer tanks for products 1-5 at site Stenungsund are utilized at disturbances in area 1-5, the loss of products 4-9 may be reduced. The buffer tank for product 1 has more than one downstream area, which requires a choice of how to control the product flow at a disturbance. Here, the choice has been made to prioritize downstream areas in order area 5, area 6, area 4, based on profitability measured as profit per time unit for the entire production lines downstream of the buffer tank. In Table 8.6, the products at site Stenungsund are ordered according to the direct and total revenue loss they cause, in descending order.

Table 8.6 Products ordered according to the revenue loss they cause.

Direct loss	Total loss
Product 9	Product 9
Product 1	Product 1
Product 6	Product 6
Product 7	Product 7
Product 8	Product 8
Product 10	Product 10
Product 4	Product 4
Product 3	Product 3
Product 2	Product 2
Product 5	Product 5

3 e) *Estimate revenue loss due to each utility*
The direct revenue loss is the same as for on/off production modeling without buffer tanks, and is thus given by (7.9). The estimate of the indirect loss due to each utility might be smaller than for on/off modeling without buffer tanks, since disturbances in utilities that affect an area upstream of a buffer tank, but not all downstream areas of the tank can be handled using the available volume of the buffer tank. At site Stenungsund, the utilities that cause such disturbances are middle pressure (MP) steam, the cooling fans in area 1-3 and feed water. As in step 3 d), downstream areas of area 1 are prioritized in order area 5, area 6, area 4. For disturbances in MP steam, the cooling fans in area 1-3 and feed water, the time t_i that the downstream area i can operate during a failure of the upstream area of time t_d is given by:

MP steam

$$t_8 = \max\left(0, \min\left(t_d, V_4/q_8^{in}\right)\right) \tag{8.10}$$

Cooling fan 1

$$t_5 = \max\left(0, \min\left(t_d, V_1/q_5^{in}\right)\right) \tag{8.11}$$

$$t_6 = \max\left(0, \min\left(t_d, \left(V_1 - t_d q_5^{in}\right)/q_6^{in1}\right)\right) \tag{8.12}$$

$$t_4 = \max\left(0, \min\left(t_d, \left(V_1 - t_d(q_5^{in} + q_6^{in1})\right)/q_4^{in}\right)\right) \tag{8.13}$$

Cooling fan 2

$$t_6 = \max\left(0, \min\left(t_d, V_2/q_6^{in2}\right)\right) \tag{8.14}$$

Cooling fan 3

$$t_7 = \max\left(0, \min\left(t_d, V_3/q_7^{in}\right)\right) \tag{8.15}$$

Feed water

$$t_{6,1} = \max\left(0, \min\left(t_d, V_1/q_6^{in1}\right)\right) \tag{8.16}$$

$$t_{6,2} = \max\left(0, \min\left(t_d, V_2/q_6^{in2}\right)\right) \tag{8.17}$$

$$t_7 = \max\left(0, \min\left(t_d, V_3/q_7^{in}\right)\right) \tag{8.18}$$

$$t_9 = \max\left(0, \min\left(t_d, V_5/q_9^{in}\right)\right) \tag{8.19}$$

where V_i is the buffer volume in the buffer tank for product i at the start of the failure, and q_j^{in} the demanded inflow for area j to be able to produce. For feed water failures that affect area 6, simultaneous failures on area 1 and 2 are taken into account to get t_6. The indirect revenue loss, j_u^{id}, due to utility u is computed as

$$j_u^{id} = \sum_{t_d} \sum_{i} (t_d - t_i) q_i^m p_i$$

for all areas i downstream of buffer tanks, and all disturbance durations t_d on that utility. t_i is the time area i can run during each disturbance, and is given by (8.10)-(8.19).

Summarizing both direct revenue losses and indirect losses at buffer tanks for each utility, we get an estimate of the total loss due to the utility. In Table 8.7, utilities are ordered according to the revenue loss they cause, starting with the utility that causes the greatest loss.

Table 8.7 Utilities ordered according to the revenue loss they cause.

Direct loss	Total loss
Cooling water	Cooling water
MP steam	MP steam
Combustion device 9	Cooling fan 1
Combustion device 7	Feed water
Cooling fan 1	Combustion device 9
Electricity	Combustion device 7
HP steam	Electricity
Feed water	HP steam
Nitrogen	Nitrogen
Cooling fan 3	Cooling fan 3
Cooling fan 2	Cooling fan 2
Instrument air	Instrument air
Cooling fan 7	Cooling fan 7
Flare	Flare
Vacuum system	Vacuum system
Water treatment	Water treatment

Step 4: Reduce Revenue Loss due to Future Disturbances in Utilities

Choice of Buffer Tank Levels The buffer tank levels that correspond to handling 90 % of all disturbances in utilities at site Stenungsund, based on disturbances during the selected time-period, are given in Figure 8.6. As a comparison, the average buffer tank levels over the considered time-period are shown in the figure. It can be seen that the average buffer tank levels over the selected time-period are well above the levels required to handle 90 % of all disturbances in utilities. However, the buffer tank levels are not chosen only to handle disturbances in utilities, but to handle all disturbances at the site and to provide inventory of products to be sold to the market. This must be taken into account to evaluate if the average buffer tank levels are appropriately

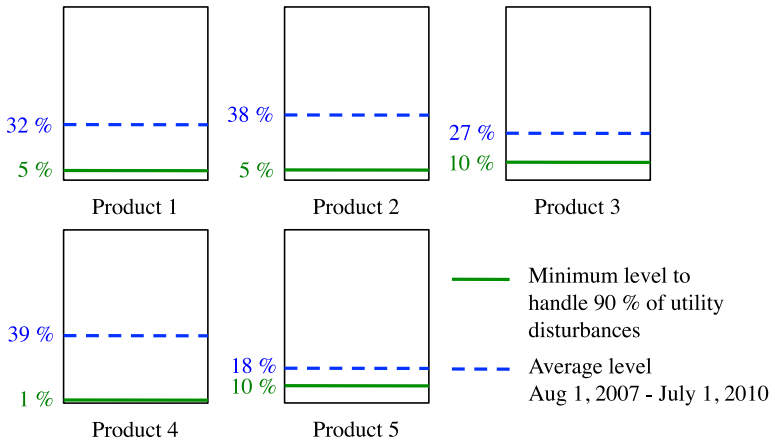

Figure 8.6 Buffer tank levels at site Stenungsund.

chosen. The constraints from disturbances in utilities give one piece that has to be taken into account when choosing desired buffer tank levels.

If upstream disturbances also are taken into account, disturbances that affect a downstream area of a buffer tank, but not all upstream areas, will impose high-level constraints on some buffer tanks.

Control of the Product Flow A guideline for how to control the product flow when a disturbance occurs is obtained from the simple on/off site model with buffer tanks, where the suggestion is to run the areas according to equations (8.10)-(8.19). Since the disturbance duration t is not known a priori, t is replaced by the estimated disturbance duration t_{est} in the equations. The estimate of the disturbance duration could be obtained from operators at the site, or the most probable disturbance duration for the utility could be used. Recompute the suggestion for product flow control if the estimation of the disturbance duration changes.

8.6 Comparison of Results

The direct revenue loss caused by disturbances in utilities is the same for on/off modeling with and without buffer tanks. In Table 8.8, the ordering of utilities according to the total revenue loss they cause is given for on/off modeling with and without buffer tanks. Because of the

Table 8.8 Utilities ordered according to the total revenue loss they cause.

On/off	On/off with buffer tanks
Cooling water	Cooling water
MP steam	MP Steam
Cooling fan 1	Cooling fan 1
Feed water	Feed water
Combustion device 9	Combustion device 9
Combustion device 7	Combustion device 7
Electricity	Electricity
HP steam	HP steam
Cooling fan 2	Nitrogen
Cooling fan 3	Cooling fan 3
Nitrogen	Cooling fan 2
Instrument air	Instrument air
Cooling fan 7	Cooling fan 7
Flare	Flare
Vacuum system	Vacuum system
Water treatment	Water treatment

reduction of the revenue losses caused by MP steam, cooling fans 1-3 and feed water, the ordering is changed when including buffer tanks in the site model. Table 8.9 shows how much the revenue losses caused by these utilities decrease when internal buffer tanks are utilized. In the table, the utilities are ordered according to the reduction of the revenue loss in money. Table 8.10 shows the reduction of the loss of each product when buffer tanks are included. The products are ordered according to the reduction of the revenue loss in money.

Table 8.9 Decrease of revenue loss for utilities when including buffer tanks.

Utility	**Decrease** (%)
Cooling fan 1	54
Cooling fan 2	86
Cooling fan 3	80
MP steam	7
Feed water	4

Table 8.10 Decrease of revenue loss for products when including buffer tanks.

Product	**Decrease** (%)
Product 9	14
Product 8	32
Product 7	10
Product 6	8
Product 4	7
Product 5	0

The on/off production modeling approach including buffer tanks should give more accurate estimates of the losses that are caused by utilities at a site than the on/off model without buffer tanks. However, areas are still modeled as on or off, and thus the site model does not adequately reflect the actual production. To catch more of the variability, the site should be modeled using a continuous production model. Continuous production modeling of a site is currently being investigated, and will also be applied to Perstorp's site at Stenungsund. Some initial findings are presented in Section 6.5.

8.7 Conclusions

According to both the on/off modeling approach without buffer tanks and the on/off modeling approach including buffer tanks, the cooling water utility is the utility that causes the greatest loss at site Stenungsund. Thus, if proactive disturbance management should be applied, it should be most profitable to try to improve the cooling water availability. For example, to include redundancy in the cooling water system or to use cooling fans for additional cooling in critical areas should reduce the revenue loss due to disturbances in utilities considerably. However, the cost of improvements for different utilities may vary and might also have to be considered.

The results from the study with on/off modeling including buffer tanks suggest that a volume of up to 10 % of each buffer tank at the site should be reserved as a buffer volume for utility disturbances. If this is done, approximately 90 % of all disturbances in the supply of utilities should be able to be handled without loss of revenue.

The study with on/off modeling including buffer tanks also gives suggestions of reactive disturbance management strategies. Given the estimated duration of the disturbance, the operators at the site can obtain estimates for if and when areas have to be shut down due to the disturbance.

9

UDM Toolbox

In this chapter, some ideas for toolboxes that simplify use of the UDM method are presented. Three tools are suggested, one for each production modeling approach in Section 2.6. Here they are denoted Tool 1-3, where Tool 1 concerns on/off production without buffer tanks, Tool 2 on/off production including buffer tanks, and Tool 3 continuous production modeling. Currently, a general tool that can be used at any site is only available for on/off production without buffer tanks (Tool 1).

9.1 Tool 1 – On/off without Buffer Tanks

A Matlab function for estimating the revenue losses due to utilities has been developed, that can be used for any site. The inputs to the function are the equipment hierarchy of the site, utility measurement data, the interdependence of utilities and the requirements of utilities in different areas, represented by matrices as described in Section 7.1. The function returns estimates of the revenue losses caused by each utility at the site, and estimates of the loss corresponding to each product due to utility disturbances. The estimates are obtained using on/off production modeling. In Matlab, the tool is run by

```
[U_av,Adir_av,Atot_av,Jdir_p,Jtot_p,Jdir_u,Jtot_u] = ...
                                = Tool_1(U,U_d,A_d,A_u,q_m,p)
```

using the notation from Chapter 7.

This is a tool that can be used for proactive disturbance management: The tool gives guidelines for on which utilities improvement ef-

forts would be most profitable. An advantage with this tool is that it gives quick results with very little modeling effort. A disadvantage is that it only gives relative results: ordering of utilities according to the revenue loss they cause.

9.2 Tool 2 – On/off including Buffer Tanks

For on/off modeling without buffer tanks, no general Matlab script has been developed yet, that can be used for any site. However, a function has been developed for the Stenungsund site at Perstorp, where losses due to each utility, and losses corresponding to each product are estimated.

This tool gives, like Tool 1, guidelines for where improvement efforts should be focused. It also provides useful information on the requirements on buffer tank levels in order to handle a certain percentage of all disturbances in utilities. In addition, it gives simple guidelines for if and when areas should be shut down due to a utility disturbance, given an estimate of the disturbance duration, i.e. a reactive disturbance management strategy. An advantage with this tool is that it requires little modeling effort, and simple both proactive and reactive disturbance management strategies are obtained. A disadvantage is that production areas are still modeled as on or off, which gives conservative results both for estimations of revenue losses and choices of buffer tank levels.

9.3 Tool 3 – Continuous Production

When continuous production modeling is used in the UDM method, more elaborate reactive disturbance management strategies may be obtained, that gives real-time advise to operators on how to control the product flow at the occurrence of a disturbance. However, developing a tool for this modeling approach will require a more advanced mathematical toolbox for modeling and optimization. Also, the modeling procedure will be much more demanding, since the effects of utility disturbances on the production in different areas at have to be investigated.

10

Conclusions and Future Work

10.1 Conclusions

A general method for reducing the revenue loss due to disturbances in utilities was presented, denoted the utility disturbance management (UDM) method. In the method, both direct effects on areas due to disturbances in utilities, and indirect effects on downstream areas because of the product flow at the site was investigated. The UDM method is easy to apply to any site by following the step-by-step instructions. A model of the site with respect to utilities is required to complete all steps of the method. In the thesis, some modeling approaches of different level of detail that may be used were described. For on/off production modeling with and without buffer tanks, the site-specific steps of the UDM method were described in detail.

The UDM method was applied to an industrial site at Perstorp. In this case study, on/off production modeling with and without buffer tanks was used. Application of the UDM method yielded ordering of the utilities at the Perstorp site according to an estimate of the loss of revenue they cause. Comparison between the results when using on/off modeling with and without buffer tanks also illustrated the influence of the buffer tanks at the site, by showing how much the loss in revenue caused by disturbances in utilities could be reduced by introducing

buffer tanks between the areas. Strategies for reducing the revenue loss due to disturbances in utilities were suggested for the Perstorp site.

10.2 Future Work

On/off production modeling has obvious limitations, since the studied industrial sites have continuous production. Continuous production modeling of a site is currently investigated, and will eventually be applied to the Perstorp site. To obtain the continuous production model, the effects of disturbances in utilities must be studied in detail, as well as the effects of the connections between areas at a site. When a continuous production model is available, some typical disturbance scenarios can be analyzed, resulting in disturbance management strategies that can be useful for operators at a site. The UDM method will also be applied to another industrial site with the current modeling approaches, to spot any adjustments that have to be made to make the method truly generic.

11

Bibliography

Bakhrankova, K. (2010): "Decision support system for continuous production." *Industrial Management & Data Systems*, **110:4**, pp. 591–610.

Bansal, M., A. Adhitya, R. Srinivasan, and I. A. Karimi (2005): "An online decision support framework for managing abnormal supply chain events." In *proceedings of the European Symposium on Computer Aided Process Engineering-15*, pp. 985–990.

Barroso, A. P., V. H. Machado, A. R. Barros, and V. C. Machado (2010): "Toward a resilient supply chain with supply disturbances." In *proceedings of the 2010 IEEE International Conference on Industrial Engineering and Engineering Management (IEEM), Macau*, pp. 245–249.

Bauer, M., J. W. Cox, M. H. Caveness, J. J. Downs, and N. F. Thornhill (2007): "Nearest neighbors methods for root cause analysis of plantwide disturbances." *Ind. Eng. Chem. Res*, **46**, pp. 5977–5984.

Brandl, D. (2002): "Business to manufacturing (B2M) collaboration between business and manufacturing using ISA-95." In *proceedings of the ISA/SEE conference, Nice, France*.

Brennan, D. (1998): *Process Industry Economics: An International Perspective*. Institution of Chemical Engineers.

Buckley, P. S. (1964): *Techniques of Process Control*. John Wiley & Sons, Inc.

Deuel, A. C. (1994): “The benefits of a manufacturing execution system for plantwide automation.” *ISA Transactions*, **33**, pp. 113–124.

Downs, J. J. and S. Skogestad (2011): “An industrial and academic perspective on plantwide control.” *Annual Reviews in Control*, **35:1**, pp. 99–110.

Downs, J. J. and E. F. Vogel (1993): “A plant-wide industrial process control problem.” *Computers & Chemical Engineering*, **17:3**, pp. 245–255.

Faanes, A. and S. Skogestad (2003): “Buffer tank design for acceptable control performance.” *Ind. Eng. Chem. Res.*, **42:10**, pp. 2198–2208.

Greenberg, H. R. (1991): *Risk Assessment and Risk Management for the Chemical Process Industry*. John Wiley & Sons, Inc.

Grossmann, I. E. (2005): “Enterprise-wide optimization: A new frontier in process systems engineering.” *AIChE Journal*, **51:7**, pp. 1846–1857.

Grossmann, I. E. and K. C. Furman (2009): “Challenges in enterprise-wide optimization for the process industries.” In *Optimization and Logistics Challenges in the Enterprise*, vol. 30 of *Springer Optimization and Its Applications*, pp. 3–59. Springer US.

Hinrichs, J., J. Rittscher, F. Laakmann, and B. Hellingrath (2005): “Disturbance management in large logistics networks.” In *proceedings of the International Conference on Industrial Logistics (ICIL), Montevideo, Uruguay*, pp. 141–152.

Hopp, W. J., N. Pati, and P. C. Jones (1989): “Optimal inventory control in a production flow system with failures.” *International Journal of Production Research*, **27:8**, pp. 1367–1384.

Hyde, K. F. (2000): “Recognising deductive processes in qualitative research.” *Qualitative Market Research: An International Journal*, **3:2**, pp. 82–89.

ISA-95.00.01 (2009): *Enterprise-Control System Integration, Part 1: Models and Terminology*. ISA.

ISA-95.00.03 (2005): *Enterprise-Control System Integration, Part 3: Models of Manufacturing Operations Management*. ISA.

ISO/WD-22400-2 (2011): *Manufacturing operations management - Key performance indicators - Part 2: Definitions and descriptions of KPIs*. ISO. (draft).

Iyer, R. R. and I. E. Grossmann (1998): "Synthesis and operational planning of utility systems for multiperiod operation." *Computers & Chemical Engineering*, **22:7-8**, pp. 979–993.

Lindholm, A., K. Forsman, and C. Johnsson (2010): "A general method for defining and structuring buffer management problems." In *proceedings of the American Control Conference, Baltimore, MD, USA*, pp. 4397–4402.

Lu, J. Z. (2003): "Challenging control problems and emerging technologies in enterprise optimization." *Control Engineering Practice*, **11:8**, pp. 847–858.

Luyben, M. L., B. D. Tyreus, and W. L. Luyben (1997): "Plantwide control design procedure." *AIChE Journal*, **43:12**, pp. 3161–3174.

Luyben, W. L., B. D. Tyreus, and M. L. Luyben (1999): *Plantwide process control*. McGraw-Hill, New York.

Maia, L. O. A., L. A. V. de Carvalho, and R. Y. Qassim (1995): "Synthesis of utility systems by simulated annealing." *Computers & Chemical Engineering*, **19:4**, pp. 481–488.

Maia, L. O. A. and R. Y. Qassim (1997): "Synthesis of utility systems with variable demands using simulated annealing." *Computers & Chemical Engineering*, **21:9**, pp. 947–950.

Monostori, L., E. Szelke, and B. Kádár (1998): "Management of changes and disturbances in manufacturing systems." *Annual Reviews in Control*, **No 22**, pp. 85–97.

Morris, W. T. (1967): "On the art of modeling." *Management Science*, **13:12**, pp. 707–717.

Newhart, D. D., K. L. Stott Jr., and F. J. Vasko (1993): "Consolidating product sizes to minimize inventory levels for a multi-stage production and distribution system." *The Journal of the Operational Research Society*, **44:7**, pp. 637–644.

Papoulias, S. A. and I. E. Grossmann (1983): "A structural optimization approach in process synthesis–ı : Utility systems." *Computers & Chemical Engineering*, **7:6**, pp. 695–706.

Perea-López, E., B. E. Ydstie, and I. E. Grossmann (2003): "A model predictive control strategy for supply chain optimization." *Computers & Chemical Engineering*, **27:8-9**, pp. 1201–1218.

Perstorp (2011): [online] `http://www.perstorp.com/`, June 2011.

Qin, S. (1998): "Control performance monitoring - a review and assessment." *Computers & Chemical Engineering*, **23**, pp. 173–186.

Rahmberg, R. (2006): *The good circles and the bad*. Perstorp, AM-Tryck & Reklam.

Ricker, N. L. and J. H. Lee (1995): "Nonlinear model predictive control of the tennessee eastman challenge process." *Computers & Chemical Engineering*, **19:9**, pp. 961–981.

Scholten, B. (2009): *MES Guide for Executives: Why and How to Select, Implement, and Maintain a Manufacturing Execution System*. International Society of Automation (ISA).

Shinskey, F. G. (2005): "Special rules for tuning level controllers (part-1)." [online] `http://www.controlglobal.com/articles/2005/404.html`, June 2010.

Silver, E. A., D. F. Pyke, and R. Peterson (1998): *Inventory Management and Production Planning and Scheduling*. Wiley, New York.

Skogestad, S. (2004): "Control structure design for complete chemical plants." *Computers & Chemical Engineering*, **28**, pp. 219–234.

Spens, K. M. and G. Kovàcs (2006): "A content analysis of research approaches in logistics research." *International Journal of Physical Distribution & Logistics Management*, **36:5**, pp. 374–390.

Thornhill, N. F. and A. Horch (2007): "Advances and new directions in plant-wide disturbance detection and diagnosis." *Control Engineering Practice*, **15:10**, pp. 1196–1206.

Thornhill, N. F., C. Xia, J. Howell, J. Cox, and M. Paulonis (2002): "Analysis of plant-wide disturbances through data-driven techniques and process understanding." In *proceedings of the 15th IFAC World Congress, Barcelona*.

Varma, V. A., G. V. Reklaitis, G. E. Blau, and J. F. Pekny (2007): "Enterprise-wide modeling & optimization–an overview of emerging research challenges and opportunities." *Computers & Chemical Engineering*, **31:5-6**, pp. 692–711.

Williams, J. H., A. Davies, and P. R. Drake (1994): *Condition-based maintenance and machine diagnostics*. Chapman & Hall.

Xia, Q. and M. Rao (1999): "Knowledge architecture and system design for intelligent operation support systems." *Expert Systems with Applications*, **17**, pp. 115–127.

Zheng, A., R. V. Mahajanam, and J. M. Douglas (1999): "Hierarchical procedure for plantwide control system synthesis." *AIChE Journal*, **45:6**, pp. 1255–1265.

Nomenclature

Symbols

$\mathbf{1}$	Column vector of ones
A_{av}^{dir}	Direct area availabilities
A_{av}^{tot}	Total area availabilities
A_d	Area dependence matrix
A_{dir}	Direct area operation matrix
A_{tot}	Total area operation matrix
A_u	Area-utility matrix
I	Identity matrix
J_p^{dir}	Direct revenue losses of products
J_p^{tot}	Total revenue losses of products
j_u^{dir}	Direct revenue loss caused by utility u
J_u^{dir}	Direct revenue losses caused by utilities
j_u^{id}	Indirect revenue loss caused by utility u
j_u^{tot}	Total revenue loss caused by utility u
J_u^{tot}	Total revenue losses caused by utilities
n_a	Number of areas
n_s	Number of samples
n_u	Number of utilities
p	Contribution margins for all products
p_i	Contribution margin for product i
q_i	Production in area i
q_i^{in}	Demanded inflow to area i
q^m	Flows to market of all products
q_i^m	Flow to market of product i
t_d	Disturbance duration
t_{est}	Estimated disturbance duration

t_i	Time area i can operate during a disturbance
t_s	Sampling interval
U	Utility operation matrix without utility dependence
U_{av}	Utility availabilities without utility dependence
U_{av}^{ud}	Utility availabilities with utility dependence
U_d	Utility dependence matrix
U_{ud}	Utility operation matrix with utility dependence
V	Current buffer tank volume
V_{tot}	Total buffer tank volume
y_{ij}	Conversion factor between product i and j

Acronyms

DOC	Dissolved organic carbon
HP	High pressure
ISA	International society of automation
ISO	International standard organization
KPI	Key performance indicator
MES	Manufacturing execution system
MP	Middle pressure
MPC	Model predictive control
MOM	Manufacturing operations management
SUSP	Suspended material
UDM	Utility disturbance management
WD	Working draft
WTU	Water treatment utility
WWC	Waste water clean
WWD	Waste water dirty
WWP	Waste water process

Department of Automatic Control
Lund University
Box 118
SE-221 00 Lund Sweden

Document name
LICENTIATE THESIS

Date of issue
October 2011

Document Number
ISRN LUTFD2/TFRT--3253--SE

Author(s)
Anna Lindholm

Supervisor
Charlotta Johnsson
Tore Hägglund

Sponsoring organisation
Swedish Foundation for Strategic Research (SSF)

Title and subtitle
Utility Disturbance Management in the Process Industry

Abstract

Use of utilities, such as steam and cooling water, is very common at industrial sites. Utilities are often shared between several production areas, and a disturbance in the supply of a utility is therefore likely to affect a large part of the production site, and cause great loss of revenue. In order to minimize the loss of revenue due to disturbances in utilities, the optimal supply of utilities to different areas has to be determined. It is not evident how utility resources should be divided, as both buffer tank levels, the connections between areas and profitability of different areas must be considered.

This thesis presents a general method for reducing the loss of revenue due to disturbances in utilities, the Utility Disturbance Management method (UDM). The method concerns identifying disturbances in utilities, estimating the loss of revenue due to such disturbances, and finding strategies for reducing the loss. A model of the production site is needed to complete all steps of the method. In this thesis, some modeling approaches are suggested, and on/off production modeling with and without buffer tanks is described in detail. The UDM method is applied to an industrial site at Perstorp using these two modeling approaches.

Key words
process control, plant-wide disturbances, utilities, availability, buffer tanks

Classification system and/or index terms (if any)

Supplementary bibliographical information

ISSN and key title
0280–5316

ISBN

Language
English

Number of pages
100

Recipient's notes

Security classification

The report may be ordered from the Department of Automatic Control or borrowed through:
University Library, Box 134, SE-221 00 Lund, Sweden
Fax +46 46 222 42 43 E-mail lub@lub.lu.se