LUND UNIVERSITY

Adaptive Stabilization

Mårtensson, Bengt

1986

Document Version:
Publisher's PDF, also known as Version of record

Link to publication

Citation for published version (APA):
Mårtensson, B. (1986). *Adaptive Stabilization*. [Doctoral Thesis (monograph), Department of Automatic Control]. Department of Automatic Control, Lund Institute of Technology (LTH).

Total number of authors:
1

General rights
Unless other specific re-use rights are stated the following general rights apply:
Copyright and moral rights for the publications made accessible in the public portal are retained by the authors and/or other copyright owners and it is a condition of accessing publications that users recognise and abide by the legal requirements associated with these rights.
• Users may download and print one copy of any publication from the public portal for the purpose of private study or research.
• You may not further distribute the material or use it for any profit-making activity or commercial gain
• You may freely distribute the URL identifying the publication in the public portal

Read more about Creative commons licenses: https://creativecommons.org/licenses/

Take down policy
If you believe that this document breaches copyright please contact us providing details, and we will remove access to the work immediately and investigate your claim.

LUND UNIVERSITY

PO Box 117
221 00 Lund
+46 46-222 00 00

Adaptive Stabilization

Bengt Mårtensson

Lund 1986

©Bengt Mårtensson

Printed in Sweden
Studentlitteratur
Lund 1986

Department of Automatic Control
Lund Institute of Technology
P.O. Box 118
S-221 00 Lund Sweden

Document name
Doctorial Dissertation

Date of issue
February 1986

Document Number
CODEN: LUTFD2/(TFRT-1028)/1-122/(1986)

Author(s)
Bengt Mårtensson

Supervisor
K. J. Åström

Sponsoring organisation

Title and subtitle
Adaptive Stabilization

Abstract

During the last few years there has been a very intense discussion on the applicability of *adaptive control* and on 'standard assumptions' made in the traditional theory. Some years ago, the question of *what is really the relevant information needed for successful adaptive control* was starting to receive some attention. The present work belongs to this tradition.

The thesis is organized as follows. A general—but brief—introduction to the field of adaptive control and different trends in it is given in Chapter 1. Chapter 2 contains general, formal definitions and statement of the problem. Several results that will be used as general building blocks are then presented. These include a viewpoint on dynamic feedback, a result on estimating the norm of the state, a theorem on time-varying singularly perturbed linear systems. The concept of switching function controller is introduced, and some properties stated. In Chapter 4 some 'meta-results' on adaptive stabilization, i.e. statements on adaptive stabilization, independent of particular algorithms are given. The main result is the complete characterization of necessary and sufficient a priori knowledge needed for adaptive stabilization, namely knowledge of the order of any stabilizing controller. Several other results are given. 'The Turing Machine of Universal Controllers' is then presented in Chapter 5. As the title indicates, this adaptive controller possessed the greatest stabilizing power a smooth, non-linear controller can have. The preceding works in the tradition that this thesis represents has all dealt with variations on the theme of high-gain stabilization. This theme is taken up in Chapter 6, where some new results are presented, especially for multivariable plants of high relative degree. Finally, we discuss if and how these results can be used. Suggestions for further work are given.

Key words
Adaptive Stabilization, Adaptive Control, Linear System Theory, Universal Controllers, High-gain Feedback

Classification system and/or index terms (if any)

Supplementary bibliographical information

ISSN and key title

ISBN

Language
English

Number of pages
122

Recipient's notes

Security classification

The report may be ordered from the Department of Automatic Control or borrowed through the University Library 2, Box 1010, S-221 03 Lund, Sweden, Telex: 33248 lubbis lund.

Contents

PREFACE vii

1. Adaptive Control

1.1 Adaptation, Learning, Self-organizing, Self-tuning 1
Learning Machines 2
Adaptive Controllers as Learning Machines 3
1.2 Approaches to Adaptive Control 4
Model Reference Adaptive Control, MRAC 4
Self-Tuning Regulators, STR 4
Gain Scheduling 5
Self Oscillating Adaptive Systems, SOAS 6
Dual Control 6
1.3 The Classical Assumptions of Adaptive Control 6
The 'Counterexamples' to Adaptive Control 7
1.4 The Necessity of the Assumptions—Universal Controllers 8
1.5 Multi-layer Control 9
1.6 Adaptive Control—A Viewpoint 10
1.7 Control Theory, Engineering, and Mathematics 11
On this Thesis 12

2. Problem Formulation

2.1 Introduction 13
2.2 Notations and Conventions Used 14
2.3 Definitions 16
Linear Adaptive Controllers 16
Convergence of Adaptive Control 17
Adaptive Control Problems 19
2.4 A Set Relation of A Priori Knowledge 19
The Different Nodes in the Diagram 21

3. Some General Tools

3.1 Introduction 23
3.2 A Viewpoint on Dynamic Feedback 24
3.3 Estimation of the Norm of the State 26
A Useful Corollary 27
3.4 A Result on Time-varying, Singularly Perturbed Systems 28
The Main Result 29
Some Remarks on the Theorem 32
On the use of the Theorem 34
Relay Controlled Systems 36
3.5 Switching Functions 38
How the Concept of Switching Functions Emerged 38
Definitions 40
The Main Result on Switching Functions 41
3.6 Conclusions 43

4. Meta Results on Adaptive Stabilization

4.1 Introduction 45
4.2 Necessary and Sufficient A Priori Knowledge 46
The Main Theorem 46
On the Minimal Order of a Stabilizing Controller 47
The Multivariable Nyquist Criterion 48
4.3 Adaptive Stabilization by Stability Indicators 50
The Basic Idea and Some Definitions 50
Known Bound on the McMillan Degree 52
No Bound on McMillan Degree Known 54
4.4 Continuous Versus Discontinuous Controllers 55
4.5 Different Parameter Updating Laws 57
Non-Minimum Phase Plants 58
4.6 Continuous Time Versus Discrete Time 59
A 'Metatheorem' on Control Theory 59
Sampling of Continuous Time Systems 60
Adaptive Stabilization by Sampled Control 61
4.7 Integrators in the Loop 62
Tracking with Zero Error Asymptotically 62
Extensions and Comments 62
4.8 Conclusions 62

5. The Turing Machine of Universal Controllers

5.1 Introduction 65
5.2 The 'Turing Machine' Controller 66
Description of the Controller 67
Heuristic Description of the Controller 68
Explicit Construction 68
Proofs 70
5.3 Modifications 72
Getting Continuity in the Scalar Case 73
Known Bound on the Gain of the Controller 74
5.4 Searching over the Dimension of the Controller 75
5.5 Conclusions 77

6. High-gain Based Stabilization

6.1 Introduction and Preliminaries 79
6.2 Unmixing the Spectrum 80
The Crystallographical Approach to Spectrum Unmixing 84
The Euler angles on $SO(n)$ 86
A Successful Construction 88
6.3 Relative Degree One, Minimum Phase Plants 90
6.4 Higher Relative Degree 91
The SISO problem 92
Stabilization of minimum phase SISO systems 94
Multivariable Extensions 95
6.5 An Example 98
6.6 Conclusions 99

7. Conclusions and Suggestions for Further Research

7.1 Introduction 101
7.2 Extensions and Discussion 102

REFERENCES 105
INDEX 109

Preface

The field of *Adaptive Control* is a vital subfield of Control Theory. During the last few years there has been a very intense discussion on the applicability of adaptive control, and on the 'standard assumptions' made in the traditional theory. New algorithms have been proposed, and old ones revised.

Some years ago, the question of *what is really the relevant information needed for successful adaptive control* begun to receive some attention. Different algorithms where published, pushing the limits of what has been achieved before. The prototype problem of stabilizing an unstable plant has been studied. This area has by some authors been called *universal controllers*. It is to this tradition the present work belongs.

Outline

Chapter 1 gives a general—but brief—introduction to the field of adaptive control and different trends in it. This serves as motivation for the subsequent work, and attempts to put the thesis in the proper context.

The problems addressed in the thesis are formally stated in Chapter 2. It is attempted to give general problem formulations and definitions, even if this generality is not necessarily needed for the sequel.

Several results which will be used as general building blocks, introducing many of the fundamental ideas in the thesis, are given in Chapter 3. These are: a viewpoint on dynamic feedback, a result on estimating the norm of the state, and a theorem on time-varying singularly perturbed linear systems. Finally the concept of switching function controller is introduced, and some properties stated.

Chapter 4 contains 'meta-results' on adaptive stabilization, i.e. statements on adaptive stabilization which are independent of particular algorithms. The main result is the complete characterization of necessary and sufficient a priori knowledge needed for adaptive stabilization, namely knowledge of the order of any stabilizing controller. Several other results are also given.

"The Turing Machine of Universal Controllers" is presented in Chapter 5. As the name suggests, this adaptive controller possesses the greatest stabilizing

power a smooth adaptive controller can have.

Earlier work on universal stabilizers have all dealt with variations of the theme of high-gain stabilization. This is taken up in Chapter 6, where some new results are presented, particularly for multivariable plants of high relative degree.

In the final chapter, possible impact of these results on the future of adaptive control is discussed. Suggestions for further work are given.

Intentions

No particular attempt has been made to present the results by using as simple mathematics as possible. Time has not permitted the inclusion of an appendix giving some introduction to some of the mathematical "standard facts" used in this thesis. The following text books are recommended as fairly elementary first introductions to the different areas: [Brickell-Clarke] or [Warner] on differentiable manifolds, [Smith] on real analysis, [Shapiro] on algebra, [Gantmacher] on matrix theory and linear algebra, [Simmons] on point set topology, [Levinson-Redheffer] or [Ahlfors] on complex analysis.

I have tried to avoid formula numbers of the type (4.16). In this thesis the tagged formulas are of two types: There are 'global' formulas, tagged by mnemonics such as (MIMOC). These are referenced throughout the thesis, and the tags appear in the index. There are also 'local' tagged formulas, tagged for example as (♡), that are referenced only locally, i.e. within the current page or so. Page references are also used to some extent.

The symbol ■ denotes the end of a proof, while □ signals end of a remark, definition, assumption, or example.

The emphasis in the thesis will be on continuous time systems. When analogous results are true for discrete time systems, in general these are stated more briefly, since the basic ideas in the proofs often are quite similar.

The mathematical conventions used, the symbols etc. are presented in Section 2.2.

⋆ ⋆ ⋆

A vast number of papers and books have been written on the subject of Adaptive Control. From the standpoint of being immediately useful, this work is probably one of the most useless among these. The results are to be considered mainly as existence proofs: to show that something is possible or impossible. It is on this level its possible importance lies.

The Production of This Thesis

This thesis has been computer type-set by myself using the type-setting program TEX, [Knuth]. Format and macros used have been written by myself, Leif Andersson, and to some extent borrowed from $\mathcal{A}\mathcal{M}\mathcal{S}$-TEX. References to theorems, lemmas, etc. and to pages are all handled by the program. The table of contents and the index are automatically generated. The computer used has been the Department's VAX 11/780, named BODE. Output device has been an Apple LaserWriter connected to the VAX, and communicating in the language POSTSCRIPT, [Adobe Systems]. The plots are generated by the program Simnon, [Åström 1985], converted into POSTSCRIPT-code, and then directly inserted into the print-file. The other figures are generated on a Macintosh using the program MacDraw. The POSTSCRIPT-code generated by MacDraw has then been extensively hand-modified, and inserted into the file. Additional programming has been done by myself. No pasting or gluing has been necessary in preparing the manuscript. Further details are given in the report [Mårtensson 1986].

Acknowledgements

This work has been carried out at the Department of Automatic Control in Lund, Sweden. The creative, friendly and highly stimulating atmosphere there has been a great pleasure. My colleagues at the Department, too many to mention, have had a highly stimulating influence on me and on this work.

The extra-ordinary access to laboratory resources, computing power, and high-quality software have made life both easier and funnier. It has been very stimulating to have complete power over type-setting and layout of the thesis, as described above. I have come to the conclusion that authors who do not type-set their own work really are missing something.

I am greatly indebted to my two supervisors: Profs. Karl Johan Åström, and Christopher I. Byrnes. K. J. Å. has 'guided' me for several years by now, arranged contacts, and making most things turn out. C. I. B., who I meet during my year at Harvard University, originally suggested the topic for the thesis. Both have been extraordinary sources of inspiration and wild ideas. Their support, enthusiasm, and inspiration has been very important for me.

I would also like to thank Prof. David Hill and Dr. Rolf Johansson for their constructive criticism on the manuscript. Discussions with Dr. Per Hagander has lead to improvements in Chapter 3. Mats Lilja, Dr. Björn Wittenmark, and Craig Elevitch have also helped me with valuable comments. M. L. has also given me a great hand in completing several "hacks" when my time was short during the last weeks of the work.

Leif Andersson has been a great resource and stimulance. He wrote the TEX-macros that formed the basis for the ones used, and he has been a great help

in preparing this thesis. The connection between the controller presented in Chapter 5 and a Turing machine was suggested by him.

I would also like to thank the Department and Lund University for the support I have got, and for giving my own work priority over teaching undergraduate courses and working on external projects etc., especially during the last year.

Lund, February 1986

Bengt Mårtensson

1

Adaptive Control

There are probably few fields within engineering in which there are so many different meanings, opinions, and feelings as in what is called "Adaptive Control". The term has been used since the 1950s. Over 1500 papers have been published. Adaptive controllers are commercially available from e.g. ASEA and Foxboro. Some authors claim that adaptive control cannot be used for anything, while others are extremely enthusiastic. There is very little agreement on what is *really* adaptive control, and what is not, and how the terms should be defined. This chapter is an attempt to increase the confusion.

We will give a very brief survey of the field of adaptive control. The goal is to give a perspective on the present work, rather than to summarize a gigantic field of engineering science. Therefore, comparatively few references will be given. For a fuller survey, the reader is referred to the survey paper [Åström 1983] and references given therein.

1.1 Adaptation, Learning, Self-organizing, Self-tuning

In everyday language *to adapt* means to change its behavior in order to cope with a changing environment. An adaptive controller thus change itself to obtain better performance of the plant it is controlling. This is sometimes, but most often not what we mean when we talk about "adaptive control". Instead, what most people seem to mean by "adaptive control" is a sort of *learning* controller, controlling a plant known only imprecisely, or changing in time in an unpredictable fashion. The controller "learns" how to behave in order to

achieve acceptable control performance. Terms like *learning control system* and *self-organizing control* have been proposed, but these have not gained popularity in the control community.

It might be meaningful to distinguish between what might be called *the adaptation problem*, to track unpredictable variations in the plant, and what can be called *the tuning problem*, i.e. to learn how to behave in order to control a fixed, unknown, plant satisfactory. In the sequel, we shall only deal with the second problem. One reason is that the problems often can be considered as fairly close. The latter problem is also easier to formulate cleanly. We also argue that time-varying systems are often not the natural way of describing particular real-world dynamical system.

Learning Machines

Inspired by the development of electronics and digital computers, there was a great interest in learning machines and learning systems in the fifties and sixties. Alan Turing's paper from 1950, [Turing 1950], discusses learning in man-built systems, and is still very readable. A class of learning machines, the *perceptrons*, was introduced by Rosenblatt, [Rosenblatt] and received a great deal of attention. The perceptron was originally proposed as a model of neuro dynamical phenomena and brain mechanisms. Learning is also sometimes claimed to take place in certain biological systems. For a discussion of these matters, see the classical works [Tsypkin] and [Bellman].

A branch of the very diverse field of *artificial intelligence*, to be distinguished from the more engineering oriented, is searching for the Holy Grail of our time: To create *the intelligent computer*, capable of e.g. passing the Turing test, introduced in the paper cited above. An interesting opposing point of view is presented in [Dreyfus], "What Computers Can't Do", where the main argument is that intelligent learning requires the possibility of exploring the environment without supervisor, i.e. a body.

We shall to some extent return to these topics at the end of the chapter, and also in the last one. However, this will not be from the philosophical standpoint, but rather the engineering standpoint of achieving more powerful controllers, and automating more complicated tasks.

In this chapter, we take the standpoint that an "adaptive controller" is a special sort of "learning machine". What shall be meant by this? We shall discuss this in very vague terms, where any term can be given 'any' interpretation. Consider the situation of a machine learning to perform a certain task. We will take the 'cybernetic' standpoint of viewing the learning machine M as a dynamical system with state space $\mathcal{X}$. A reasonable way of assigning a meaning to the concept of "successful learning" is to say that there is a subspace $\mathcal{Z} \subset \mathcal{X}$ such that the natural projection of the state $x \in \mathcal{X}$ on the quotient space $\mathcal{Q} = \mathcal{X}/\mathcal{Z}$ converges to a certain point in $\mathcal{Q}$. The subspace $\mathcal{Z}$ is then the component of the state space that M needs to accomplish its prescribed task

after learning. The quotient space $\mathcal{Q}$ represents the current state of knowledge, and we shall—in accordance with the adaptive control tradition—call this the parameter space. In this tradition, Z is, by a slight abuse of language, called *the state space.*

Adaptive Controllers as Learning Machines

We have motivated that the division of the "full" state space in a "state space" and a "parameter space" is inherent in the idea of learning machine. From now on, we leave the more general framework behind, and concentrate on control of plants described by differential or difference equations on differentiable manifolds. We shall discuss the concept of an adaptive controller in very informal terms, guided more by intuition and figures than hard mathematics.

In the framework of learning machines, an adaptively controlled process has to consist of two feedback loops. There is an inner loop, consisting of the plant, preceded by a parameter dependent precompensator. There is also an "adaptation loop", consisting of a learning mechanism, supervising the inner loop, updating its inner state (the "parameters"), and passing parameters to the precompensator. The outer loop can be considered as a non-linear 'meta-feedback'. This is depicted in Figure 1.1.

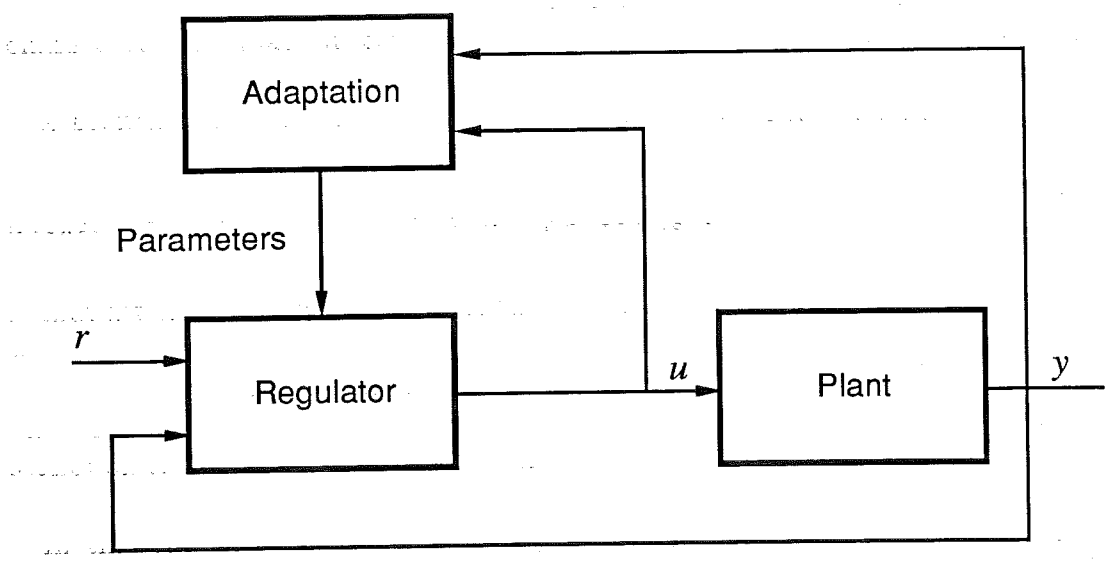

Figure 1.1. The General Adaptive Controller

By now, nothing have been said about linear versus non-linear systems. In fact, everything so far has been completely independent of this. However, there exists a well established engineering practice for constructive synthesis of linear controllers for linear, time-invariant plants, and it is probably not possible to reach the same status for any major class of non-linear systems. Therefore,

the plant is most commonly assumed to be linear, and the precompensator constructed as a linear time-invariant system for fixed values of the parameters. Assuming that the parameters really were fixed, the adaptive control problem would "only" be to find values of the parameters, such that the inner loop, with frozen parameters, exhibited satisfactory performance. But with frozen parameters no adaptation at all takes place! If parameter estimation algorithms and design algorithms are considered as given, this is the theoretical problem of adaptive control. Heuristicly, we may argue that the parameters are only moving "slowly" (as compared to the states), and thus we may hope that this "slow time-variation", then considering the inner loop as time-varying system, does not spoil anything. This is the concept of *slow adaptation.* Recently, some authors have tried to make this idea strict (or stricter) by so called *averaging techniques.* This is intuitively speaking a way of separating the 'fast' and the 'slow' time scales in a local coordinate system by forming local path-averages over the trajectories.

In the classical setting, the learning process can have one of two goals: Either we aim at getting the maximum information of the plant, a priori constrained to belong to a certain, parametrized set. This is called *parameter adaptive control.* The other approach is where we do not care about the plant per se, but instead consider the control performance, and eventually try to optimize this. This approach is called *performance adaptive control.* In the present work, the latter path is chosen.

1.2 Approaches to Adaptive Control

Some approaches to adaptive control, especially *model reference adaptive control* and *self tuning regulators*, are described in this section.

Model Reference Adaptive Control, MRAC

The *model reference adaptive controller* emerged from the tradition of single-input, single-output, continuous time linear systems without stochastic disturbances. The adaptive controller consists of a *model*, i.e. a linear, time-invariant 'nice' system, fed with the reference signal. The object of the control is to make the output of the plant close to the output of the model. The adjustment mechanism is driven by the difference between the outputs of the plant and the model. A block diagram is shown in Figure 1.2.

Self-Tuning Regulators, STR

The *self-tuning regulator* represents the second mainstream in adaptive control. It consists of a recursive on-line parameter estimator, and a controller design algorithm, which at every instant computes a controller, based on the current parameter estimate. In principle, any combination of on-line identification and

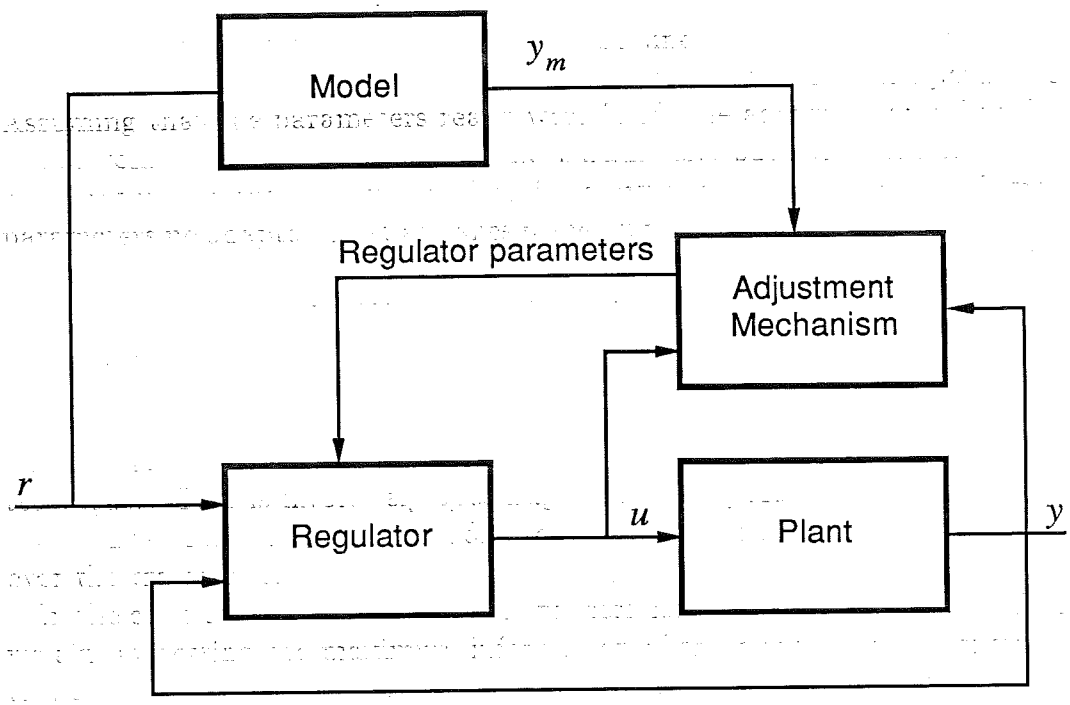

Figure 1.2. The Model Reference Adaptive Controller

controller design principle can be used. In contrast to the model reference adaptive controller, the self tuning regulator's home ground is the discrete time, stochastic environment. We also remark that the scheme can sometimes be rewritten so that the regulator parameters can be achieve directly, so called *direct self-tuning control.* Figure 1.3 shows the block diagram of the self-tuning regulator. Even though the model reference adaptive controller and the self tuning regulator steam from fairly different 'home-lands', it is clear from the block diagrams that the approaches are related. Some authors have tried to present a unified approach.

Gain Scheduling

Sometimes the concept of *gain scheduling* is referred to as adaptive control. This is a heuristic approach to control of non-linear systems or control by using reduced order models. The plant is considered as a parameter dependent linear plant. The 'parameters' reflect 'different operating conditions', and measurements are assumed to be available. The linear controller then is a continuous or discontinuous function of these parameters. The time-invariant design is motivated by 'slow parameter variation'. A rule of thumb is that "the parameters you schedule with respect to should be ten times as slow as the dynamics".

If the term "adaptive control" is interpreted to include some element of learning, as discussed above, this is clearly not adaptive control.

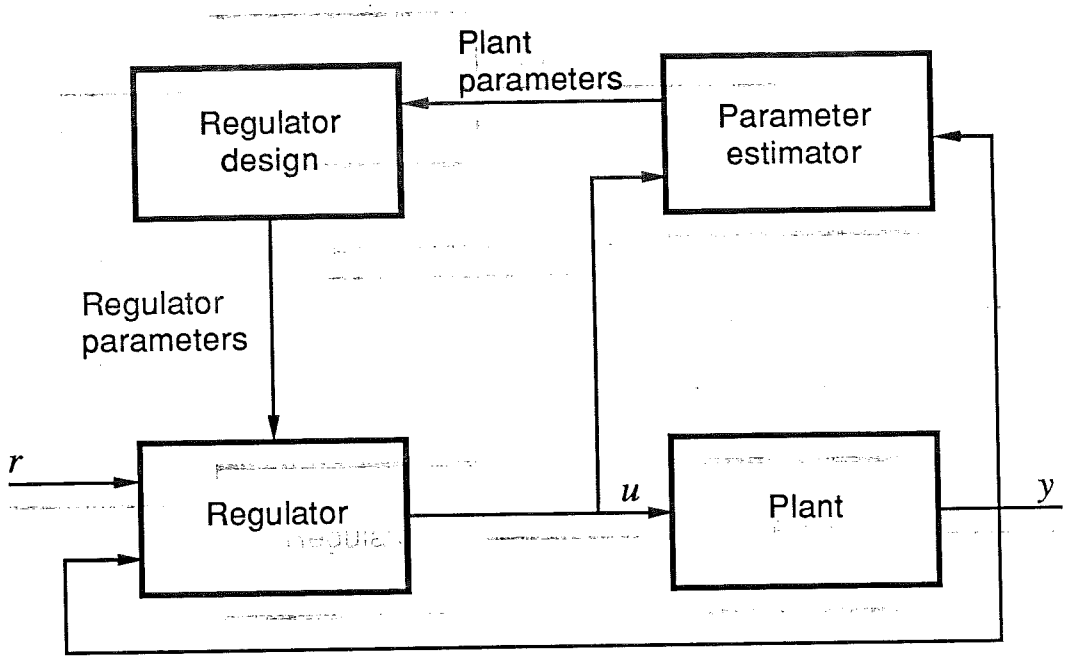

Figure 1.3. The Self Tuning Regulator

Self Oscillating Adaptive Systems, SOAS

An early approach to adaptive control was the so-called *self oscillating adaptive systems*. They consisted of an oscillating relay in a high-gain loop. These "adaptive controllers" have only historical interest.

Dual Control

Dual control is the stochastic optimal control approach to control of an unknown, parametrized plant. In the Bayesian tradition, we "are given" a loss-function, and initial distributions on the parameters in the system and its initial states. The object of the dual controller is to minimize the loss-function. Heuristically, this involves the tradeoff between low instantaneous loss, and introducing perturbations in order to get more knowledge of the plant in order to minimize the loss in the long run. The 'parameter space' of the controller is the conditioned probability distribution, which is an element in an—in general infinite dimensional—function space. Therefore, the computational requirements are prohibitive for all non-trivial plants.

1.3 The Classical Assumptions of Adaptive Control

In the end of the seventies and the beginning of the eighties, proof for convergence and stability of the model reference adaptive controller and the self-tuning regulators appeared, see references given in [Åström 1983]. These proofs all required some variant of the following assumptions:

(i) A bound n^* on the order of the transfer function $g(s) = n(s)/d(s)$ is known.

(ii) The relative degree $r = \deg d(s) - \deg(n)$ is known exactly.

(iii) The plant is minimum phase.

(iv) The sign of the 'instantaneous gain', i.e. the leading coefficient of $n(s)$, is known.

There have been different variations of this. Some algorithms have later been presented, which are claimed to handle non-minimum phase systems. Condition (ii) is sometimes replaced by the sharper condition that the plant is strictly positive real, i.e. its Nyquist curve resides entirely in the right half plane. In discrete time, usually an upper bound on the magnitude of the 'instantaneous gain' is also required. There is often the requirement of a "sufficiently exiting" input signal.

It has been argued that these four assumptions always are violated in "real life". In a sense, this is a meaningless statement, since for example there are no finite-dimensional, linear systems either. A more sensible question would be: Are these assumptions compatible with a—for the purpose of control engineering—reasonably accurate description of plants we would like to control? Discussion of these matters often has a tendency of leading to some sort of infinite regression. It can be argued that assumptions (ii) and (iv) deal with the infinite-frequency behavior of the plant; with the power series of a rational function around the point at infinity. But on the other hand, all experience shows us that plants of high relative degree are really hard to control, at least manually.

The 'Counterexamples' to Adaptive Control

In a PhD-thesis from 1982, [Rohrs], it was shown by simulation that certain common adaptive control schemes could be made unstable by e.g. unmodeled higher order dynamics. That is, when condition (i) was violated, which, it was argued, always is the case in real life. On a conference later that year, it was claimed that "the adaptive algorithms considered cannot be used for practical adaptive control", [Rohrs-Valavani-Athans-Stein]. This initiated a very intense, somewhat emotional, and sometimes confused discussion. To this author, it seems like there has been a disagreement on the rules of the game being played.

The questions raised by Rohrs et. al. has been answered in essentially two different ways. The first is very natural and fundamental: Since the basic question really is on the more engineering level of what to do when the conditions of an idealized, mathematical model are violated, there have been several suggestions which essentially "only" are a sound view of the use of mathematical engineering. In essence, if the excitation of the system is poor—poor in the sense of exciting the dynamics in the frequency range around the bandwidth of the closed loop system—then either turn off the adaptation, or introduce

perturbation signals. This "safety net" is easily implemented as an auxiliary, supervisory loop. It should be remarked that the commercially available adaptive controllers contain all sorts of "safety nets" of this sort. For example, in ASEA's Novatune much more software is devoted to "safety nets" than to the adaptive algorithm.

The second response is described in the following section.

1.4 The Necessity of the Assumptions—Universal Controllers

Another direction is the investigation of the four assumptions (i) – (iv). To what extent are they really necessary? Can we devise algorithms which do not require such assumptions? What is the largest set of plants that can be successfully controlled by an adaptive controller? Or equivalently, what do we have to know about the plant in order to control it? The present work belongs to this tradition. Therefore, we shall be slightly less brief in this section, and give more references.

In order to isolate the question, we study, at least in the first run, only the most fundamental property of a control system, namely stability. Controllers devised for this purpose are sometimes, in a terminology introduced by A. S. Morse, referred to as *universal controllers.* We shall adopt this term in the thesis. At least as the term has been used up until now, a universal controller lacks all practical interest, and its value is entirely on the theoretical level.

In the paper [Morse 1983] the following conjecture is raised: *Adaptive stabilization of the set of first order systems* $\{\dot{y} = y + bu\colon b \neq 0\}$ *by a smooth adaptive controller is not possible.* That is, adaptive stabilization is impossible if condition (iv) is violated. (The formulation given here is slightly more informal than the original, more technical one.) The conjecture was proven for the special case of the parameter updating law being a polynomial. It was shown in [Nussbaum] that the conjecture is also true for the parameter updating law being a rational function, but—more important—that there is a whole class of stabilizing controllers. One such controller is

$$u = k^2 \cos k\, y$$
$$\dot{k} = y^2$$

Note the cosine-factor, which accounts for switching of the sign in the frozen parameter controller. For a direct proof, see the survey paper [Morse 1984b]. In [Willems-Byrnes] Nussbaum's result was generalized to any single-input, single output, minimum phase plant of relative degree one, and later in [Byrnes-Willems] to square multivariable plants with invertible 'instantaneous gain'. The algorithm was however discontinuous and not given explicitly. A refinement was given in [Byrnes-Mårtensson-Willems]. [Morse 1985b] gives an algorithm stabilizing any single-input, single-output minimum phase plant of

relative degree not exceeding two. In conclusion, it has been demonstrated that neither assumption (i) nor (iv) is needed for adaptive stabilization.

Algorithms based on the combination of a traditional adaptive controller together with a sign-switching 'Nussbaum-function' have been presented in [Morse 1984a], and in [Mudgett-Morse 1985ab]. An observer-based algorithm is given in [Morse 1985a]. Adaptive stabilization of first order, single-input, single-output discrete time plants is addressed in [Mudgett-Morse 1985cd].

In [Mårtensson 1985a] an algorithm capable of stabilizing any multivariable plant, for which the order of a linear, time-invariant stabilizing controller is known, was presented. The paper [Mårtensson 1985b] contains the corresponding discrete time result. For continuous time systems, it was shown in [Byrnes 1985] that this a priori knowledge is also necessary for adaptive stabilization. Necessary and sufficient a priori information for adaptive stabilization has thus been characterized. The conditions (ii) and (iii) have been replaced by a weaker condition.

Stabilization of certain non-linear plants is addressed in the paper [Byrnes-Isidori 1984].

1.5 Multi-layer Control

Recently, to a large extent due to the rapidly increasing access to computing power, and partially inspired by the artificial intelligence field, there has been a growing interest in controllers operating in several different operating modes, and on several hierachical levels. We shall call this *multi-layer control.* This is not a standard term. A multi-layer controller consists of two different sets of components: controllers used for a certain, limited purpose; and hierachic, supervisory control. We give some examples of such 'limited controllers':

A very simple 'pre-adaptive' controller is the autotuner, [Åström-Hägglund]. This is a quick-and-dirty method for automatic tuning of simple controllers such as PID-controllers. It can be used for example for initialization of a process, provided it is stable. Commercially available adaptive controllers have good local convergence properties, but worse global performance. In emergency situations, and far away from normal operating point, it might be desirable to use a very simple, but extremely reliable controller. It is often desirable to include sequential logic. Etcetera, etcetera.

The supervisory loop builds up a data base of its 'experiences' from using a particular control strategy in a particular situation. It also incorporates heuristics, by knowing some well established rules of thumb for e.g. tuning of simple controllers. Since this resembles an expert system, the area is sometimes referred to under the slightly emotionally inclined terms of *expert control* and *intelligent controllers.* See [Åström-Anton] and [Årzén-Åström]. Also compare the work by G. Saridis, e.g. [Saridis].

We will return to these matters in the last chapter, were we also speculate somewhat on the future development, and possible practical use of results presented in this thesis.

Today's work in the field entitled "artificial intelligence" is almost completely experimental work in the laboratory. Heuristic programming etc. deals with less structured problems, where heuristics might be the only way out. When the program, or whatever it is called, is finished, by that very procedure more knowledge is gained, and the problem may be posed in a more structured fashion. However, the original approach might have been the only feasible way for the researcher to work. This situation is vaguely analogous to when a mathematician solves a problem using mathematical methods far out of the reach of non-mathematicians. When the problem is settled, often the solution can be rephrased in more elementary terms than originally used to solve the problem.

Heuristics is not a way to replace analysis, precise knowledge, and mathematics. On the contrary, we shall strive for replacing heuristics by solid knowledge and theoretically well established methods whenever possible. There also ought to be a mutually rewarding interplay between researchers within artificial intelligence, other engineers, and mathematicians.

1.6 Adaptive Control—A Viewpoint

Adaptive control is to some extent used in practice today. Sometimes it is used for what has been referenced to above as the tuning problem, but more often it is supposed to 'follow variations in the plant', e.g. around different operating points. These, in the terms of classical control engineering, correspond to different linearizations of a non-linear system, and therefore to "different systems". The adaptive controller is thus really used for controlling a non-linear plant using linear theory plus adaptivity. From a purist point of view, this is of course an abuse of the concept of adaptivity as a learning machine. However, in a practical situation it might possibly be the best solution achievable with existing, commercially available components.

There are well established analysis and design methods for single-input, single-output linear systems, and emerging for multivariable. The tools for dealing with non-linear systems in the classical control engineerers tool box essentially concern stability only. Such tools are e.g. the describing function method, the circle criteria, the passivity theorem, and the low-gain theorem. Questions concerning fundamental properties such as controllability and observability for non-linear systems, and global descriptions of non-linear systems with more general manifolds as their state spaces, have not been addressed until the beginning of the seventies. With one exception—the characterization of the non-linear systems that can be diffeomorphically mapped onto linear systems by coordinate transformations of the input space and the state space—there

have this far not been any more general constructive synthesis methods given for a large class of non-linear systems.

The general non-linear control problem is the following: Given a set of plants $\mathcal{G}$, find a (possibly non-linear) controller achieving satisfactory performance for each one of them. Adaptive control is one approach to the solution of this problem, in some sense based on the concept of parameter dependent linear control, and learning. This will be the standpoint taken in this thesis. Another approach to the problem is *robust control*, namely to design one fixed linear controller, capable of controlling each plant in the set $\mathcal{G}$. If this is possible, the price might be a very high order of the controller, as compared to the order necessary for controlling any single plant in $\mathcal{G}$.

1.7 Control Theory, Engineering, and Mathematics

The field of control theory is very diverse. It ranges from theoretical work on a high level of sophistication, to the very implementation of control systems. It is sometimes claimed that control theory can be applied in many fields outside engineering, such as economics, biology, and medicine. Modern control theory also combines methods of mathematics, statistics, and computer science in a creative brew. Mutual exchange of inspiration takes place, apart from the disciplines above, e.g. with economics, power system theory and electrical engineering on the whole, and many others. Control theory is therefore an interesting, vital, and rapidly developing branch of engineering science.

Mathematical engineering science, and in particular control theory as a sort of 'meta-theory of engineering', uses mathematics in order to describe certain aspects of reality, with the purpose of doing something constructive with impact on that very reality. In this sense, engineering science differs from the 'pure' natural science, whose goal is "just" to explain. This is the constructive element engineering and mathematics has in common: not only to explain, but to build up and construct something.

We are striving to build models not just for the fun of it, but to use the model for analysis, whose outcome will affect our decisions in the future. Therefore, we are always faced with the problem of having models "accurate enough", i.e. reflecting enough of the "important" aspects of the problem. The question of what is "accurate enough" can only, eventually, by settled by real-world experiments. On the mathematical side, we have theorems saying things like "P implies Q", where P and Q are mathematical statements. It can then be widely discussed to what extent this result can be used to say something about the real world. We might say that P represents something that can never be satisfied in the real world, but we might very well throw away in principle all of modern engineering in this way.

We can prove that the controller $u = -2y$ stabilizes the unstable system $\dot{y} = y + u$, but we can *never* prove that a certain physical controller achieves satisfactory performance when controlling a certain, physical plant, except by experiments.

On this Thesis

Questions as the ones discussed above will not be treated any further in this thesis. All of its scientific contents lives in a mathematical world. Theorems will be stated saying that if certain conditions are fulfilled for a mathematical object, then a certain conclusion holds. To falsify this, one has to find a flaw in the proof. The mathematical objects do not necessarily bear *any* reassemblence with anything in the real world, nor be a reasonable model of anything, at least not a priori. Sometimes we discuss the realism of the assumptions, and what might happen if they are violated, but then most often on a more informal level.

2

Problem Formulation

2.1 Introduction

In this chapter we will introduce a class of problems to which the remainer of the thesis will be devoted. As in all creative scientific work, we will raise more questions than we will be able to answer, at least in the present work.

Some notations that will be used in the sequel is collected in the next section. This is mostly standard.

In Section 2.3 we will formulate the notation of *linear adaptive controller*, and what kind of *stability* or *convergence* we are heading for. Although not used in the sequel, we also pose the problem of tracking with different kind of reference signals, together with the *regulator problem*, i.e. keeping the output of the plant close to zero in the presence of (deterministic or stochastic) disturbances. We also define what shall be meant by an *adaptive control problem.*

In this thesis, a certain amount of a priori knowledge of the plant will be considered as knowing that the plant belongs to a certain set of plants. The more a priori knowledge about the plant we have, the smaller the set will be. In Section 2.4 a set relation of a priori knowledge is introduced. Each node in the set diagram corresponds to an adaptive control problem.

2.2 Notations and Conventions Used

In this section we introduce some notation that is going to be used frequently in the sequel. It will mostly be standard material, but for clarity it is collected here anyhow. Some of the conventions used are also listed.

The symbols $\mathbb{N}$, $\mathbb{Z}$, $\mathbb{Q}$, $\mathbb{R}$, and $\mathbb{C}$ denote the natural numbers, the integers, the rational numbers, the real numbers, and the complex numbers respectively, equipped with their usual algebraic and topological properties. For $\alpha \in \mathbb{R}$, by $\mathbb{C}^\alpha$ we shall mean the subset of the complex numbers $\mathbb{C}$ defined by $\mathbb{C}^\alpha = \{s \in \mathbb{C} : \operatorname{Re} s < \alpha\}$. $\mathbb{C}^0$ will also be denoted by $\mathbb{C}^-$, while $\mathbb{C}^+$ will denote $\{s \in \mathbb{C} : \operatorname{Re} s > 0\}$. $\mathbb{R}^+$ and $\mathbb{R}^-$ are defined analogously. The positive integers are denoted by $\mathbb{Z}^+$.

When we say that a statement P_t is true for large values of the parameter t, we shall mean that there exists a t_0 such that P_t is true for all $t > t_0$. A statement P_x is said to be true for generic $x \in \mathbb{R}^n$ or $\mathbb{C}^n$ if the set of x such that P_x is false form a proper (possibly empty) algebraic or analytic variety.

Sometimes we write a set $\mathcal{A} = \{A_1, \ldots, A_n\}$, and then allow n to take on the value $\aleph_0$, the cardinal number of a countable set. In this case, $\mathcal{A}$ is simply the countable set $\{A_1, A_2, \ldots\}$.

When we say that a time-invariant linear system is stable, this shall always mean asymptotically stable. The same convention also applies to matrices and transfer functions. Similarilly, the terms "left half plane" and "right half plane" shall denote the open left, or right, half plane.

For k an integral domain (e.g. $\mathbb{Z}$, $\mathbb{Q}$, $\mathbb{R}$, or $\mathbb{C}$), k^n will as usual denote the k-module of ordered n-tuples of k. Also, $k[x]$ is the ring of polynomials in the indeterminate x and coefficients in k, while $k(x)$ denotes the corresponding field of rational functions. If $f(x) = n(x)/d(x) \in k(x)$, where $n(x), d(x) \in k[x]$, the relative degree of $f(x)$ will be defined as $\deg d(x) - \deg n(x)$. The rational function $f(x)$ will be called *proper* (*strictly proper*) if the relative degree is nonnegative (positive).

For $x \in \mathbb{R}$, by $\lfloor x \rfloor$ we shall mean the (lower) integer part of x, i.e. the largest integer smaller than or equal to x, while $\lceil x \rceil$ is the upper integer part of x, i.e. the smallest integer larger than or equal to x.

The symbol $o(x)$ denotes any quantity satisfying $\lim_{x\to\infty} o(x)/x = 0$.

The transpose of a matrix A is denoted by A^T. Its spectrum, i.e. its set of eigenvalues, will be denoted by $\operatorname{sp} A$. The spectral radius, denoted by $\varrho(A)$, is the largest magnitude of the eigenvalues. The maximum and minimum singular values of a matrix A are denoted by $\overline{\sigma}(A)$ and $\underline{\sigma}(A)$ respectively. That is,

$$\overline{\sigma}(A) = \sup_{\|x\|=1} \|Ax\|, \qquad \underline{\sigma}(A) = \inf_{\|x\|=1} \|Ax\|$$

where $\|\,.\,\|$ denotes the usual Euclidean norm on $\mathbb{R}^n$. We will use the same symbol for denoting a finite-dimensional linear mapping and its associated matrix. The image and kernel of a linear mapping A is denoted by $\operatorname{im} A$ and $\ker A$ respectively.

Sometimes we shall make statements about bounded norms without specifying what norm is used. In such cases, this is harmless since we are in general only concerned about qualitative statements, and on finite dimensional vector spaces all norms are equivalent.

The symbol ":=", sometimes reversed, denotes an assignment, i.e. the symbol on the left hand side is defined to be equal to the right hand side.

For k an integral domain, $\mathcal{GL}(n,k)$ is the group of non-singular $n\times n$-matrices with coefficients in k. $\mathcal{O}(n,k)$ is the group of orthogonal matrices (i.e. satisfying $OO^T = O^TO = I$), while $\mathcal{SO}(n,k)$ is the subgroup of $\mathcal{O}(n,k)$ having determinant 1. If k is $\mathbb{R}$ or $\mathbb{C}$, these also have the structure of Lie groups. When the coefficient ring is obvious, the second argument will be dropped.

$\mathbb{C}^* = \mathbb{C}\bigcup\{\infty\}$ denotes the one-point compactification of the complex numbers. The unit sphere in n-dimensional normed space $\mathcal{X}$ is denoted by $S^{n-1} := \{x \in \mathcal{X} : \|x\| = 1\}$. This is of course dependent of the particular norm chosen. The n-dimensional torus $\mathbb{T}^n$ is the n-fold product of circles $S^1 \cong \mathbb{R}/2\pi\mathbb{Z}$. We will write $\mathbb{T}$ instead of $\mathbb{T}^2$.

For $f(t)$ a measurable time-function (or more generally a tempered distribution), its Laplace transform is defined by

$$\hat{f}(s) = \{\mathcal{L}f\}(s) = \int_0^\infty e^{-st} f(t)\,dt$$

if the integral on the right hand side exists. Otherwise, in general (e.g. if f is a Bohl distribution) the Laplace transform has a meromorphic continuation, which we, by a slight abuse of language, also will call the Laplace transform.

The concept of a dynamical system is not defined in its full generality since it is fairly involved, and not needed for the sequel. Only linear systems living on finite-dimensional vector spaces are treated in this thesis. Such systems can be described as a linear mapping

$$\mathcal{S} : \mathcal{U} \times \mathcal{X} \longrightarrow \mathcal{Y}$$

where $\mathcal{U}$ and $\mathcal{Y}$ are suitable input- and output spaces (e.g. $L^2_{loc}(\mathbb{R}^m, \mathbb{R}^+)$ and $L^2_{loc}(\mathbb{R}^p, \mathbb{R}^+)$ respectively), and $\mathcal{X}$ is the state space (or, in this setting, rather the space of initial conditions), namely a finite dimensional Euclidean space.

2.3 Definitions

Some definitions of the different concepts used in the thesis are introduced in this section. This constitutes a foundation for the remaining work, and a way of looking at the problems. Only continuous time problems will be covered.

Throughout this work, the dynamic system to be controlled will be called *the plant*. Except for some discussional passages, this will always be just a mathematical object, with no link—at least not a priori—to anything in the real world. The terms *input* and *output* shall always be interpreted with respect to the plant.

When the plant is considered as time-varying, we shall avoid the Laplace-transform formalism, and instead consider the input-output description as a function in the differential operator $p := d/dt$.

All plants in this thesis are considered to be controllable and observable. Of course, all stabilizing results presented in this thesis can be restated for plants that are just stabilizable and detectable, but we shall not do so.

The concept of *linear adaptive controller*, and the distinction between *parameters* and *states*—a crucial concept in adaptive control—will be discussed next. We also define what kind of *convergence* we are heading for, and what shall be meant by an adaptive control problem.

Linear Adaptive Controllers

Adaptive control is one way of looking at the more general non-linear control problem. By a *linear adaptive controller* we shall mean a certain special case of a nonlinear controller. Assume that the plant G, its times $\mathcal{T}$, its input space $\mathcal{U}$, its output space $\mathcal{Y}$, and its space of reference signals $\mathcal{R}$ are a priori given. We might be dealing with systems described by stochastic differential equations, but this only corresponds to a fairly straightforward change of notation, although the interpretation might be drastically different.

Definition 2.1. Let l be a non-negative integer and $\mathcal{X}$ a vector bundle of rank l over the C^∞-manifold $\mathcal{M}$. (Recall that $\mathcal{X}$ is by definition locally trivial, i.e. locally isomorphic to the Cartesian product of an open set $\mathcal{O} \subset \mathcal{M}$ and $\mathbb{R}^l$.) We shall call the mapping

$$\mathcal{S} : \mathcal{Y} \times \mathcal{R} \times \mathcal{X} \longrightarrow \mathcal{U}$$

a *linear adaptive controller* with *state space* $\mathbb{R}^l$ and *parameter space* $\mathcal{M}$ if it is smooth in the sense of a control system, [Brockett], and for fixed $k \in \mathcal{M}$ the

mapping $S_k : \mathcal{Y} \times \mathcal{R} \times \mathbb{R}^l \longrightarrow \mathcal{U}$ is linear. That is, it can locally be written as

$$\begin{aligned} \dot{z} &= F(t,k)z + G(t,k)y \\ u &= H(t,k)z + K(t,k)y \\ \dot{k} &= f(y,r,t,z,k) \end{aligned}$$

where F, G, H, K, and f are locally defined C^∞-functions, or a corresponding stochastic differential equation. Here $x = (z^T, k^T)^T$ is a decomposition of the state of the controller corresponding to the local decomposition of $\mathcal{X}$ in $\mathbb{R}^l$ and $\mathcal{M}$. □

For a global, coordinate free description of a non-linear control system as a section of a certain pull-back bundle, see [Brockett].

With this definition, what makes a nonlinear controller into a linear adaptive controller is the (local) decomposition of the state space into a vector space times a manifold, together with linearity for fixed values of the parameters.

It is clear from Figures 1.2 and 1.3 that this definition covers the traditional approaches to adaptive control, namely model reference adaptive control and the self tuning regulator. Also compare Figure 1.1.

Convergence of Adaptive Control

We will next make precise what we mean by convergence of a certain adaptive controller, controlling a certain plant. This concept will cover both the original stabilizing problem, the tracking problem (to follow a certain, given reference signal r, sometimes called the servo problem), and the regulator problem (to keep the output y close to zero in the presence of disturbances).

With the usual controller structure, these two problems are structurally the same, and thus there is no reason to treat more than one (on the theoretical level of this thesis). Figure 2.1 illustrates the tracking problem. Here $e = r - y$, and the object of the control is to keep e close to zero, in some suitable sense.

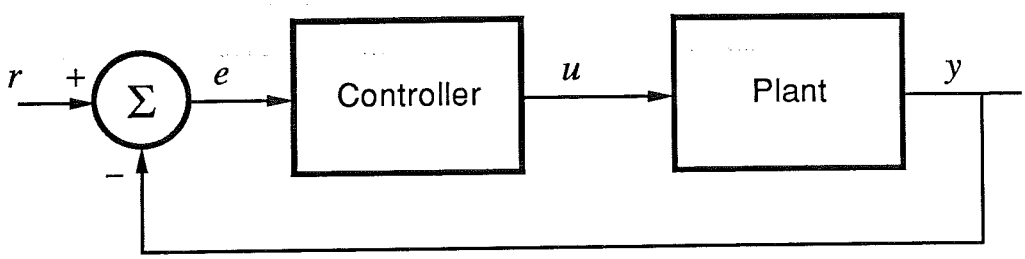

Figure 2.1. The Tracking Problem

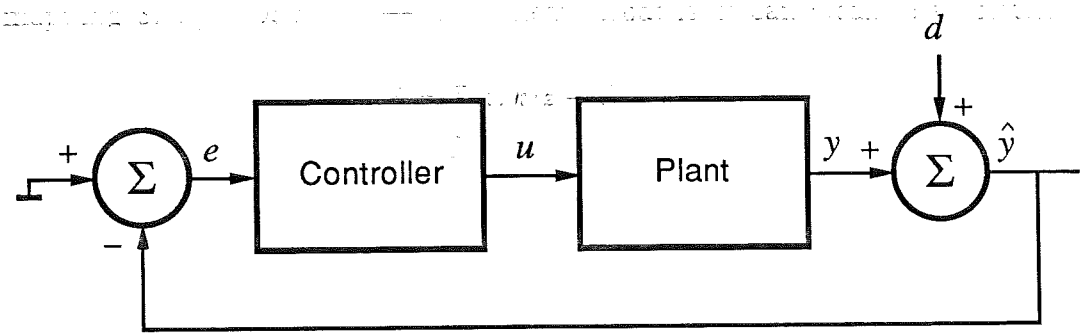

Figure 2.2. The Output Disturbance Regulator Problem

For the regulator problem, it is a simple consequence of linearity that all disturbances can be represented as equivalent output disturbances. The regulator problem for output disturbances is depicted in Figure 2.2. Note that the notation is slightly non-standard. The object of the control is to keep 'the disturbed output' $\hat{y} \approx 0$. It should be obvious to the reader that, on this level of abstraction, the problems are 'isomorphic', i.e. the same after only a change of notation and interpretation. In the sequel we will only consider the tracking problem.

When there is a reference signal $r \not\equiv 0$, it is not completely straightforward to give a meaning to the concept of convergent adaptive control. If the set of plants $\mathcal{G}$ is allowed to contain plants of arbitrary high McMillan degree, convergence e.g. in the sense of asymptotic (perfect) tracking is not possible. For the definitions to make sense, we require r to have some kind of stationarity. This can mean at least seven different things:

(i) $r = 0$

(ii) $r = r_0$

(iii) $\lim_{t\to\infty} r(t) = r_0 = \text{constant}$

(iv) $r(t)$ is periodic with period $T > 0$

(v) $r(t)$ approaches periodicity with period $T > 0$ as $t \to \infty$

(vi) $r(t)$ is a stationary stochastic process

(vii) $r(t)$ is a stochastic process, approaching stationarity as $t \to \infty$ in a suitable sense.

Definition 2.2. For r stationary in some of the senses above, we shall say that the linear adaptive controller $K \not\equiv 0$, controlling the plant G, whose state space is $\mathbb{R}^n$, converges, if, as $t \to \infty$, $\mathcal{M} \ni k$ converges to a finite value k_∞, while $z \in \mathbb{R}^l$, and $x \in \mathbb{R}^n$ approach stationarity in the same sense as r. □

Note that for the stabilization problem, case (i) above, this means that x and z approaches 0 as t goes to infinity. Also note that the definition makes sense also if $\mathcal{X}$ is a non-trivial vector bundle.

Adaptive Control Problems

Finally, this is what shall be meant by an *adaptive control problem.*

Definition 2.3. We shall call the following an *adaptive control problem*: Let $\mathcal{G}$ be a set of plants, and $r \in \mathcal{R}$ be an a priori given reference signal, stationary in one of the senses above. The adaptive control problem consists of finding a linear adaptive controller K, such that for any plant $G \in \mathcal{G}$, the controller K, controlling G, converges in the sense above. □

The 'size' of $\mathcal{G}$ can be considered as a measure of the uncertainty of the plant.

This thesis essentially deals with the stabilization problem, i.e. where $r \equiv 0$. However, extension to the tracking problem for a constant, non-zero reference signal $r = r_0$ is fairly easy, see Section 4.7.

Remark 1. It can be argued that the convergence concept is indeed a very weak one, especially from a practical point of view. This weak definition is an attempt to solve the problem of assigning *some* reasonable meaning to the concept of convergence, without restricting $\mathcal{G}$ to be e.g. finite dimensional, and without going into quantitative statement—which hardly can be compatible with the qualitative concept "convergence". □

2.4 A Set Relation of A Priori Knowledge

Once the control objective and the reference signal are given, there is a one-to-one correspondence between adaptive control problems and subsets of plants. The object of this thesis is, for a sensible set of plants $\mathcal{G}$, to find a feasible controller for all plants in $\mathcal{G}$, giving a—in some sense—satisfying performance. This means the stabilization problem or the tracking problem in any of the guises outlined.

From now on, we shall consider only strictly proper, time-invariant, linear plants described by finite dimensional differential equations, with vector spaces as their state space. That is, plants that can be written either on state space form as

$$\begin{aligned} \dot{x} &= Ax + Bu, \qquad x \in \mathbb{R}^n, \qquad u \in \mathbb{R}^m \\ y &= Cx, \qquad\quad\;\; y \in \mathbb{R}^p \end{aligned} \tag{MIMOC}$$

or, on input-output form

$$\hat{y}(s) = G(s)\hat{u}(s)$$

where $G(s) \in \mathbb{R}^{p\times m}(s)$ is a matrix whose entries are strictly proper rational functions in the complex variable s.

There is a corresponding notation for discrete time plants, but this is analogous, and therefore not given here. In this thesis essentially continuous time

plants are deal with, although we will state as many statements as possible also for discrete time plants. This will be further discussed in Chapter 4.

The object of this thesis is performance related adaptive control. The input-output description is therefore considered as the natural description of the plant. A state space representation is sometimes used, but this is to be considered as a trick for the analysis. It follows that all state space representations are to be considered as equally natural.

We shall take the standpoint of considering these different 'interesting' set of plants as a set relation. This will almost be a hierarchical relation. A set diagram is shown in Figure 2.3. An adaptive control problem now corresponds to a node in this diagram.

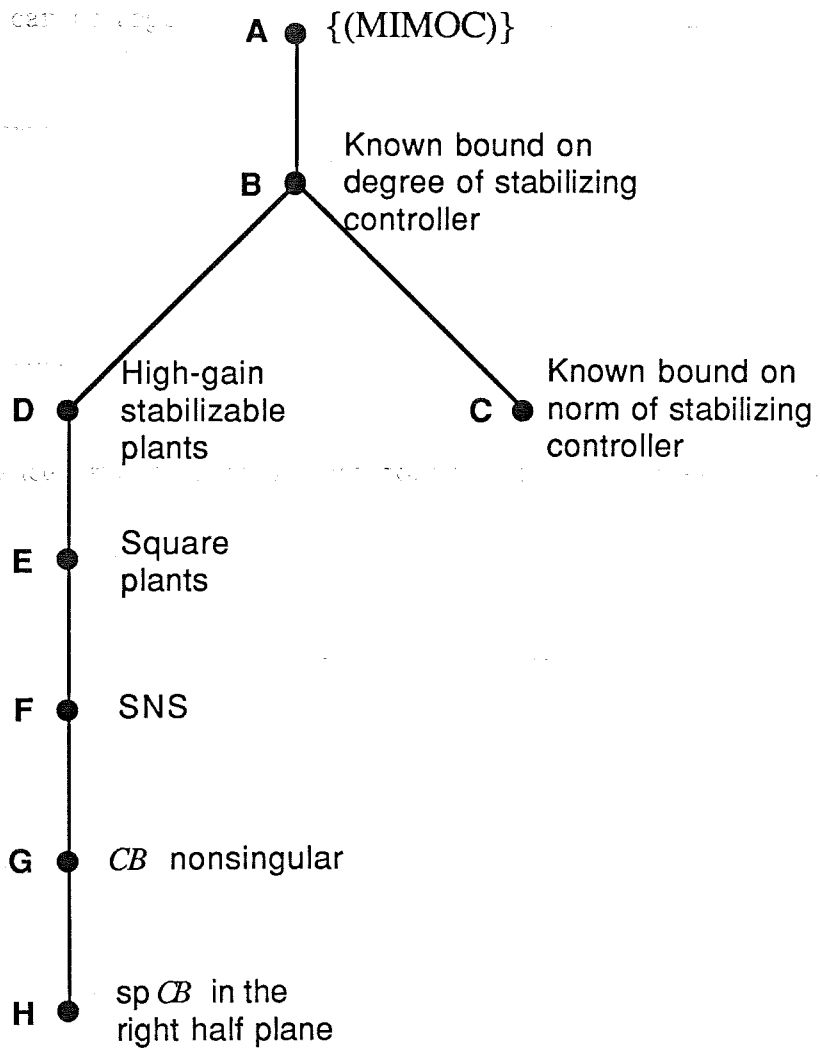

Figure 2.3. The Set Diagram of Adaptive Control Problems

The Different Nodes in the Diagram

The different nodes in the diagram, i.e. some adaptive control problems, will now be discussed. This will also be a sneak preview of the forthcoming chapters.

The number of (available) inputs and outputs of the plant are of course known. The upper node in the diagram, node A, corresponds to 'no information at all' about the plant, i.e. the set consisting of all plants of the type (MIMOC), having a certain value of m and p. As will follow from Theorem 4.1, there can be *no* smooth linear adaptive controller, stabilizing all plants in this set. However, in Section 5.4 it is shown how to stabilize any plant in this set by a suitable switching between controllers of different dimensions of their linear constituent.

The following node, B, consists of plants for which we know a non-negative integer l, such that for that for each plant, there exists a fixed linear regulator of order l stabilizing it. From the above mentioned theorem, this is the largest set of plants stabilizable by a smooth adaptive controller. A constructive algorithm will be given in Chapter 5. Another algorithm is given in Section 4.2.

Assuming knowledge of the degree of a stabilizing controller, the diagram splits into two branches. The left branch, node D, consists of 'high-gain stabilizable' plants, i.e. plans for which there exists stabilizing controllers of arbitrary high gain. This is very closely related to the minimum phase property. The right branch, node C, consists of plants satisfying "Assumption Bounded Required Gain", i.e. such that we know an α with the property that there is a stabilizing controller of norm not exceeding α. In Chapter 5 it is also shown how to take advantage of this additional a priori information.

Following the node of high-gain stabilizable plants is node E, consisting of square plants. Of course, this is not added a priori information in the same sense as the other lower nodes. In this thesis only square high-gain stabilizable plants will be treated. These are the only 'true' multivariable systems in the sense of being a bijective mapping between input and output spaces.

Then node F follows, the set of plants satisfying "Assumption SNS" which is a technical condition of simple null structure of certain functions of the Markov parameters $\{CA^{i-1}B\}_{i=1}^{\infty}$. This assumption will be introduced formally in Chapter 6. We also require knowledge of a bound on the "strong relative degree", a concept we will introduce in Chapter 6. That chapter is devoted to construction of stabilizing controllers for the set of plants under consideration, where an algorithm capable of stabilizing the whole set is explicitly given in Section 6.4.

Node G consists of system with "multivariable relative degree 1", i.e. satisfying $\det CB \neq 0$. This is the simplest multivariable generalization of Nussbaum's results. An algorithm for this set is given in Section 6.3.

Finally, node H is the set of plants for which $\operatorname{sp} CB \subset \mathbb{C}^+$. (It is a standard fact that this property—and also assumption SNS—are independent of the coordinates on the state space.) The property might be called 'multivariable relative degree 1 and positive instantaneous gain'. Such plants can be handled

by a stabilizing algorithm based on the idea of 'cranking up the gain'. This is solved in Section 3.4.

There are of course the intersections between the sets in the left hand branch and the right hand branch. It is fairly straight-forward to modify the given algorithms to take advantage of this added a priori knowledge. A template for this is the second subsection of Section 5.3.

3

Some General Tools

3.1 Introduction

In this chapter most of the tools for the subsequent work will be developed. Methods will be developed which hopefully will have some interest outside the new—and perhaps short-lived—field of 'universal stabilizers'.

In the next section we show that, in a catchy formulation, the dynamic feedback problem is the product of the problem of determining the order of the controller dynamics times the static feedback problem. Results on estimates of the norm of the state of the plant, expressed in the controller parameter, are developed in the following section. A corollary shows that, under a mild condition, it is enough to show that the controller parameter stays bounded in order to prove stability and convergence. Section 3.4 presents a theorem on 'fast' time-varying, singularly perturbed systems. This will be an alternative viewpoint on the non-linear system an adaptive regulator constitutes. It is used to prove a result on stability of an algorithm based on the idea of turning up the gain. Somewhat surprisingly, this result also applies to a problem arizing in relay control of single-input, single-output linear systems. The last section deals with the concept of switching function controllers. Some background is given, and a theorem on stabilization by switching function based adaptive controllers is proven.

Some of the material in this chapter has been published before. Earlier versions of Sections 3.2 and 3.3 can be found in [Mårtensson 1985ab]. The

core of Section 3.4 is a result by Byrnes and Mårtensson, published in [Byrnes-Isidori 1985]. An error in that proof is corrected here. The result on switching functions in the general setting presented is new. It has recently been brought to the authors knowledge that [Kabamba-Longman] contains a treatment of dynamic feedback similar to Section 3.2.

3.2 A Viewpoint on Dynamic Feedback

In this section it is shown that, from a certain point of view, dynamic feedback can conceptually be replaced by static feedback.

The idea is very simple: the plant is augmented by a box of integrators, each with its own input and output. Static feedback is then applied to the augmented plant, i.e. the plant together with the integrators. For the continuous time case, the situation is depicted in Figure 3.1.

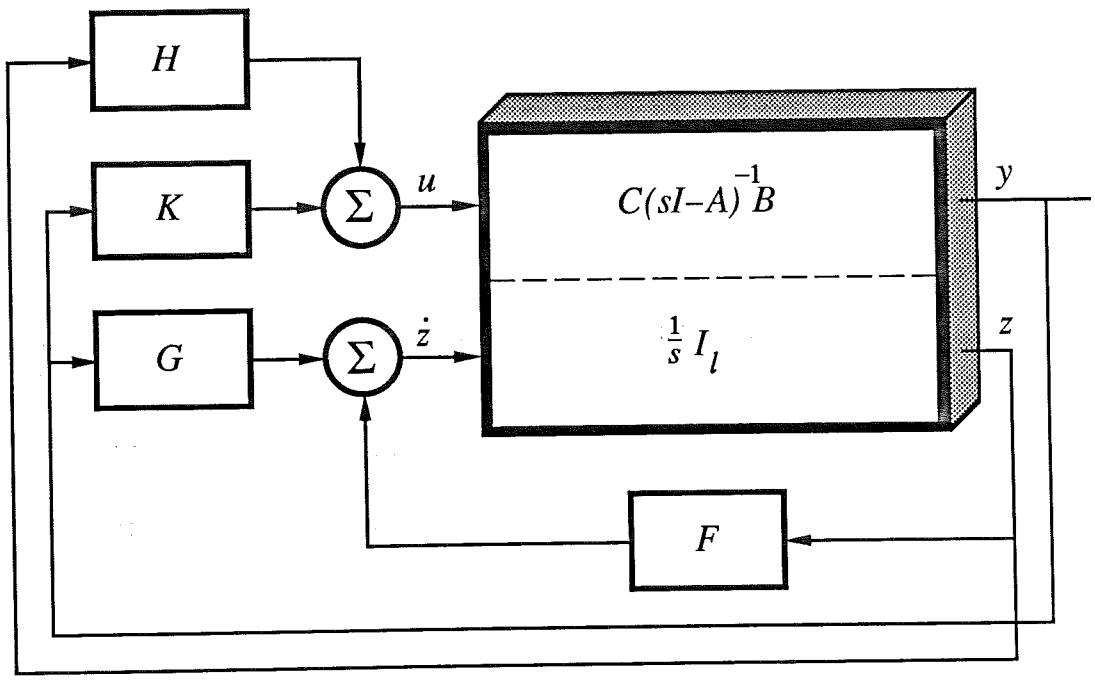

Figure 3.1. Dynamic feedback considered as static feedback

More formally: Consider the following dynamic feedback problem: Given the plant

$$\begin{aligned} \dot{x} &= Ax + Bu, \qquad x \in \mathbb{R}^n, \qquad u \in \mathbb{R}^m \\ y &= Cx, \qquad\quad\;\; y \in \mathbb{R}^p \end{aligned} \tag{MIMOC}$$

and the controller

$$\dot{z} = Fz + Gy, \qquad z \in \mathbb{R}^l$$
$$u = Hz + Ky$$

It is easy to see that this is equivalent to the static feedback problem

$$\begin{aligned} \dot{\tilde{x}} &= \tilde{A}\tilde{x} + \tilde{B}\tilde{u} \\ \tilde{y} &= \tilde{C}\tilde{x} \\ \tilde{u} &= \tilde{K}\tilde{y} \end{aligned} \qquad \text{(MIMOCA)}$$

where

$$\tilde{x} = \begin{pmatrix} x \\ z \end{pmatrix} \qquad \tilde{u} = \begin{pmatrix} u \\ \dot{z} \end{pmatrix} \qquad \tilde{y} = \begin{pmatrix} y \\ z \end{pmatrix}$$

and

$$\tilde{A} = \begin{pmatrix} A & 0 \\ 0 & 0 \end{pmatrix} \qquad \tilde{B} = \begin{pmatrix} B & 0 \\ 0 & I \end{pmatrix} \qquad \tilde{C} = \begin{pmatrix} C & 0 \\ 0 & I \end{pmatrix} \qquad \tilde{K} = \begin{pmatrix} K & H \\ G & F \end{pmatrix}$$

For the discrete time case: Let the plant be

$$\begin{aligned} x(t+1) &= Ax(t) + Bu(t), \qquad x \in \mathbb{R}^n, \qquad u \in \mathbb{R}^m \\ y(t) &= Cx(t), \qquad y \in \mathbb{R}^p \end{aligned} \qquad \text{(MIMOD)}$$

and the controller

$$\begin{aligned} z(t+1) &= Fz(t) + Gy(t), \qquad z \in \mathbb{R}^l \\ u(t) &= Hz(t) + Ky(t) \end{aligned}$$

This is equivalent to the static feedback problem

$$\begin{aligned} \tilde{x}(t+1) &= \tilde{A}\tilde{x}(t) + \tilde{B}\tilde{u}(t) \\ \tilde{y}(t) &= \tilde{C}\tilde{x}(t) \\ \tilde{u}(t) &= \tilde{K}\tilde{y}(t) \end{aligned} \qquad \text{(MIMODA)}$$

where $\tilde{x}, \tilde{y}, \tilde{B}, \tilde{C}$, and $\tilde{K}$ are as before, while

$$\tilde{A} = \begin{pmatrix} A & 0 \\ 0 & I \end{pmatrix}$$
$$\tilde{u}(t) = \begin{pmatrix} u(t) \\ z(t+1) \end{pmatrix}$$

Remark 1. This observation might seem very powerful at least at first sight, but note the highly non-generic nature of $\tilde{A}$, $\tilde{B}$, and $\tilde{C}$. This means e.g. that results on generic pole placement by static output feedback, see [Brockett-Byrnes], [Byrnes 1982], do not translate at all. □

3.3 Estimation of the Norm of the State

In this section a lemma is proven, which gives an estimate of the norm of the state x of (MIMOC) (or (MIMOD)), expressed in the L^2 (or ℓ^2) norm of y and u. The result will be used extensively in the sequel. The lemma has a simple corollary, which implies that, under mild conditions, to show that an adaptive algorithm converges and stabilizes the plant, it is enough to show that the controller stays bounded. First we give the continuous time version.

LEMMA 3.1 ("THE NORM OF THE STATE ESTIMATE LEMMA, CONTINUOUS TIME VERSION"). *Assume that the linear system* (MIMOC) *is observable. Then:*

(i) *For all $x(0)$, there are constants c_0 and c_1 such that*

$$\|x(t)\|^2 \le c_0 + c_1 \left(\int_0^t \|y(\tau)\|^2 \, d\tau + \int_0^t \|u(\tau)\|^2 \, d\tau \right)$$

for all $x(0)$, $u(\,.\,)$, and $t \ge 0$. Here c_0 does not depend on t or u; and c_1 does not depend on t, $u(\,.\,)$ or $x(0)$.

(ii) *For $T > 0$, c_1 can be taken so*

$$\|x(t)\|^2 \le c_1 \left(\int_{t-T}^t \|y(\tau)\|^2 \, d\tau + \int_{t-T}^t \|u(\tau)\|^2 \, d\tau \right)$$

for all t, $u(\,.\,)$, and $x(t-T)$.

There is also the analogous discrete time version:

LEMMA 3.2 ("THE NORM OF THE STATE ESTIMATE LEMMA, DISCRETE TIME VERSION"). *Assume that the linear system* (MIMOD) *is observable. Then:*

(i) *For all $x(0)$, there are constants c_0 and c_1 such that*

$$\|x(t)\|^2 \le c_0 + c_1 \left(\sum_{\tau=0}^t \|y(\tau)\|^2 + \sum_{\tau=0}^t \|u(\tau)\|^2 \right)$$

for all $x(0)$, $u(\,.\,)$, and $t \ge 0$. Here c_0 does not depend on t or u; and c_1 does not depend on t, $u(\,.\,)$ or $x(0)$.

(ii) *For $T \ge \nu$, the observability index of* (MIMOD), *c_1 can be taken so*

$$\|x(t)\|^2 \le c_1 \left(\sum_{\tau=t-T}^t \|y(\tau)\|^2 + \sum_{\tau=t-T}^t \|u(\tau)\|^2 \right)$$

for all t, $u(\,.\,)$, and $x(t-T)$.

Remark 1. In (ii) we can consider c_1 as a function of T. This function can clearly be taken continuous and decreasing. □

Remark 2. Note that, for t bounded from below, or, in the discrete time case, $t \geq \nu$, (i) follows trivially from (ii). Also note that the c_0-term is necessary if and only if we allow arbitrary small $t > 0$, or $t < \nu$, respectively. □

Remark 3. It is not possible to improve the result by deleting the integral of u. A simple counter-example can be constructed by letting (MIMOC) be an integrator, the initial state $x(0) = 0$, and the input $u(\tau) = \delta(\tau - (t - \varepsilon))$, for some small $\varepsilon > 0$. Choose coordinates in the state space so that $x = y$. Then clearly $x(t) = 1$, and $\int y^2 d\tau = \varepsilon$, so by letting $\varepsilon \to 0$, we arrive at a contradiction. A counterexample for the corresponding discrete time statement is even simpler, and is therefore omitted. The lemma is true without the u-dependent term if and only if $G(s)$ has a proper left-inverse. □

Proof. The proof for the continuous time case is given in detail. The proof for the discrete time case is then outlined. This will essentially be a 'character string replacement routine'. However, a full proof for the discrete time case is given in [Mårtensson 1985b].

In an obvious operator notation we have

$$x(t) = e^{At}x(0) + \int_0^t e^{A(t-\tau)}Bu(\tau)\,d\tau =: L_1^t x(0) + L_2^t u(\,.\,) \qquad (\smile)$$

$$y(\,.\,) = L_3 x(0) + L_4 u(\,.\,) \qquad (\frown)$$

where L_1^t, L_2^t, L_3, and L_4 are bounded linear operators between suitable Hilbert spaces. We first prove (ii). Let $T > 0$ be given. By using time invariance, it is enough to show (ii) for $t = T$. From observability, $(\frown)$ can be solved with respect to $x(0)$, i.e. $x(0)$ is the image of $y(\,.\,)$ and $u(\,.\,)$ under a continuous linear mapping. Inserted into $(\smile)$, this proves (ii).

By Remark 2, it only remains to show (i) for small t, say $t \leq 1$. For this, note that the operators $\mathcal{L}_1 = \{L_1^t : 0 \leq t \leq 1\}$ and $\mathcal{L}_2 = \{L_2^t : 0 \leq t \leq 1\}$ are uniformly bounded by, say, k_1 and k_2. From these observations, (i) follows (for $t \leq 1$) from $(\smile)$, since $\int_0^t \|u\|^2\,d\tau \leq \int_0^t \left(\|u\|^2 + \|y\|^2\right)\,d\tau$. For the continuous time case, the proof is finished.

To construct the proof for the discrete time version, change all integrals to the corresponding sums, and "$e^{A(t-\tau)}$" to "$A^{t-\tau}$". Also note that $x(t)$ can, by definition, be expressed in $y(\,.\,)$ and $u(\,.\,)$ if and only if $T \geq \nu$. This completes the proof. ■

A Useful Corollary

The lemma has the following immediate corollary, which will be used in the connection with adaptive stabilizers. We make the following definition:

Definition 3.3. A function $f : \mathbb{R}^p \times \mathbb{R}^m \times \mathbb{R} \times \mathbb{R} \longrightarrow \mathbb{R}$ will be called *L^2-compatible* if it is satisfies a Lipschitz-condition and there exists a constant $c > 0$ such that $f(y,u,k,t) \geq c(\|y\|^2 + \|u\|^2)$ for all k and all t. □

The name is motivated by the fact that for f being an L^2-compatible function, we can estimate the L^2-norm of (y,u) by the integral of f, as will be done in the proof of the following corollary.

COROLLARY 3.4. *Consider the plant* (MIMOC), *and let $u(.)$ be a continuous time-function. Let k satisfy*

$$\dot{k} = f(y,u,k,t), \quad k(0) = k_0$$

where f is an L^2-compatible function. Then, if k converges to a finite limit k_∞ as $t \to \infty$, it holds that $\|x(t)\| \to 0$ as $t \to \infty$.

Proof. Clearly

$$\int_0^\infty (\|y\|^2 + \|u\|^2)\, dt \leq \frac{1}{c} \int_0^\infty f(y,u,k,t)\, dt = \frac{1}{c}(k_\infty - k_0) < \infty$$

Thus, for any $T > 0$, the right hand side of (ii) in Lemma 3.1 approaches zero when t approaches infinity. The corollary follows. ■

Remark 4. Obviously, there is a discrete time version. We omit both formulation and proof, since we believe that this is trivial. □

Remark 5. In previous 'universal' stabilizing algorithms, see the references given in Chapter 1, the step of showing that $x(t) \to 0$ as $t \to \infty$ has involved a minimum phase argument. This is not required here. This aspect will be further discussed in the next section, and also in Chapter 4. □

3.4 A Result on Time-varying, Singularly Perturbed Systems

The main result in this section is a theorem on the stability of time-varying, singularly perturbed linear systems. It states that, under some technical conditions, if a singularly perturbed system is stable for large values of the parameters, then the system remains stable for *arbitrarily fast* variations in the time scales. In this sense, the result differs from all other results on stability of time varying system of which this author is aware of.

In this work, we are not interested in time varying systems per se, and we claim—somewhat ideologically—that it is a very common conceptual error to mistake a time-invariant non-linear system for a time-varying system of a different structure. Of course, this might be perfectly legitimate mathematically,

but most often, it is conceptually a non-appealing description of a real-world system. We will adopt this idea *as a mathematical trick*, namely to consider the non-linear system, i.e. the adaptive controller, as a time-varying linear system. With this approach, the time-varying singular perturbation theorem is used to prove a theorem on the stability of high-gain based adaptive stabilization, the problem being to turn up the gain high enough in a scalar fashion.

This field contains a lot of unsettled questions. In 1949, M. A. Aizerman formulated a conjecture which, slightly rephrased, stated that if, for some $\alpha > 0$, $\operatorname{sp} A(t) \subset \mathbb{C}^{-\alpha}$ for all t, then the time-varying system $\dot{x} = A(t)x$ was stable, [Aizerman]. Later it has been presented counter-examples showing that this conjecture is false. It is an interesting question to find some more general additional conditions, under which Aizerman's conjecture would be true.

The Main Result

We will now formulate and prove a theorem on time varying, singularly perturbed systems. Recall that an $n \times n$-matrix A has simple null-structure if $\operatorname{im} A \oplus \ker A = \mathbb{R}^n$.

THEOREM 3.5 ("THE TIME-VARYING SINGULAR PERTURBATION THEOREM"). *Consider the linear time-varying system*

$$\dot{x} = A(t)x = (A_0 + f(t)A_1)\,x, \qquad x \in \mathbb{R}^n \tag{TVSP}$$

where

(i) f is a positive, scalar, real-analytic, increasing function approaching infinity as $t \to \infty$.

(ii) For some $\alpha > 0$ it holds that $\operatorname{sp} A(t) \subset \mathbb{C}^{-\alpha}$ for all sufficiently large t.

(iii) The matrix A_1 has simple null structure.

Under these conditions, the unique solution of (TVSP) *will go to zero exponentially.*

Notice that it is only (iii) that imposes a hard constraint on the use of the theorem. This will be discussed further after the proof. It will be shown in Proposition 3.9 that system-theoretically, (iii) is equivalent to a multivariable relative-degree-one requirement.

The proof relies on the following lemma from [Willems-Byrnes].

LEMMA 3.6 (BYRNES-WILLEMS). *Consider the time-varying, multi-input, multi-output linear system*

$$\begin{aligned} \dot{x} &= Ax + Bu, \qquad x \in \mathbb{R}^n, \qquad u \in \mathbb{R}^m \\ y &= Cx \qquad\qquad\quad y \in \mathbb{R}^m \end{aligned} \tag{\$}$$

If (\$) *is stable, in the sense that it represents a bounded* L^2*-operator, there exist constants* k_1, k_2 *such that for all* $x(0) \in \mathbb{R}^n$, $T \in \mathbb{R}^+$, *and* $u(.) \in L^2([0,T], \mathbb{R}^m)$ *there holds*

$$\left| \int_0^T \langle u(t), y(t) \rangle \, dt \right| \leq k_1 \|x(0)\|^2 + k_2 \int_0^T \|u(t)\|^2 \, dt$$

where $\langle \, . \, , \, . \, \rangle$ *denotes an arbitrary inner product on* $\mathbb{R}^m$, $\|u(t)\|$ *the corresponding norm, and* $\|x(0)\|$ *any norm on* $\mathbb{R}^n$.

In [Willems-Byrnes] the lemma was formulated only for single-input, single-output, time invariant systems, but after only a change of notation, the same proof holds for the formulation given here.

Proof. With the same notation as in the proof of Lemma 3.1,

$$\langle y, u \rangle = \langle L_3 x(0), u \rangle + \langle L_4 u, u \rangle$$

where $\langle \, . \, , \, . \, \rangle$ denotes the inner product on L^2. By Cauchy-Schwarz' inequality, some elementary estimations, and since the involved operators by assumption are bounded,

$$|\langle y, u \rangle| \leq \|L_3\| \|x(0)\| \|u\| + \|L_4\| \|u\|^2 \leq \frac{1}{2} \|L_3\| \|x(0)\|^2 + \left(\frac{1}{2} \|L_3\| + \|L_4\| \right) \|u\|^2$$

This proves the lemma. ∎

We will next characterize the matrix $A(t)$ and its eigenvalues. Let $m = \operatorname{rank} A_1$. By assumption (iii) there is a $T \in \mathcal{GL}(n)$ such that

$$T^{-1} A_1 T = \begin{pmatrix} 0 & 0 \\ 0 & A_{11}^1 \end{pmatrix}$$

where A_{11}^1 is a non-singular $m \times m$-matrix. Put

$$T^{-1} A T =: \begin{pmatrix} A_{00} & A_{01} \\ A_{10} & A_{11}^0 + f A_{11}^1 \end{pmatrix}$$

In the following, the corresponding partitioning of the state vector is also used, i.e.

$$x = \begin{pmatrix} x^0 \\ x^1 \end{pmatrix}$$

The following lemma describes the asymptotic expansion of the eigenvalues of $A(t)$ as t approaches infinity.

LEMMA 3.7. *When t approaches infinity, the eigenvalues of $A(t)$ split into two disjoint groups: There are m unbounded eigenvalues, approaching infinity such that* $\operatorname{sp} \frac{1}{f} A(t)$ *converges to* $\operatorname{sp} A_1$, *while the remaining $n-m$ eigenvalues converge to* $\operatorname{sp} A_{00}$.

Proof. The first statement is obvious. The second follows immediately from the following, slightly more general lemma.

LEMMA 3.8. *Let $A(t)$ be a matrix of the form*

$$A(t) = \begin{pmatrix} A_{00}(t) & A_{01}(t) \\ A_{10}(t) & A_{11}(t) \end{pmatrix}$$

where $\lim_{t\to\infty} A_{00}(t) = \bar{A}$, $\underline{\sigma}(A_{11}(t)) \to \infty$ *as* $t \to \infty$, *and either* $A_{01}(t)$ *or* $A_{10}(t)$ *is bounded. Then the finite eigenvalues of* $A(t)$ *approach* $\operatorname{sp} \bar{A}$ *as* $t \to \infty$.

Proof. Assume that A_{10} is bounded. (Otherwise consider the matrix A^T instead.) To prove the lemma, we shall show that for any complex number $\lambda \notin \operatorname{sp} \bar{A}$ the matrix $\lambda I - A(t)$ is invertible for large t. It is no restriction to assume that $\lambda = 0$, since otherwise we might replace A by $A - \lambda I$. Let $v = \begin{pmatrix} v_0^T & v_1^T \end{pmatrix}^T \neq 0$ be given. It remains to prove that $A(t)v \neq 0$ for all sufficiently large t. If $v_1 \neq 0$ we are finished, since in this case $\|A(t)v\| \to \infty$ as $t \to \infty$. If $v_1 = 0$ then

$$A(t)v = \begin{pmatrix} A_{00}v_0 \\ A_{10}v_0 \end{pmatrix} \neq \begin{pmatrix} 0 \\ 0 \end{pmatrix}$$

for large t by the assumption that $\bar{A}$ was non-singular. This completes the proof. ∎

We are now ready to complete the proof of the theorem.

Proof of Theorem 3.5. By dividing both sides of (TVSP) with f we see that in the time-scale $\tau = \int^t f(s)\,ds$ a global Lipschitz-condition is satisfied. Therefore there is a unique, globally defined solution to (TVSP). Lemma 3.7 and assumption (ii) imply that the matrices A_{00} and A_{11}^1 both have their spectra in the left half plane. Let $Q = Q^T$ be the unique, positive definite solution to ${A_{11}^1}^T Q + Q A_{11}^1 = -I$. First we will prove that $\|x^1(t)\|^2$ goes to zero exponentially. For this consider

$$\frac{1}{2}\frac{d}{dt}\left\|x^1\right\|_Q^2 = \langle x^1, \dot{x}^1\rangle_Q = \left\langle x^1, A_{10}x^0\right\rangle_Q + \left\langle x^1, \left(A_{11}^0 + fA_{11}^1\right)x^1\right\rangle_Q \qquad (\surd)$$

We may consider $A_{10}x^0$ as the output of the time-invariant linear system $\mathcal{S}^0$, which has the system matrix A_{00}, i.e. a stable system. This is illustrated in

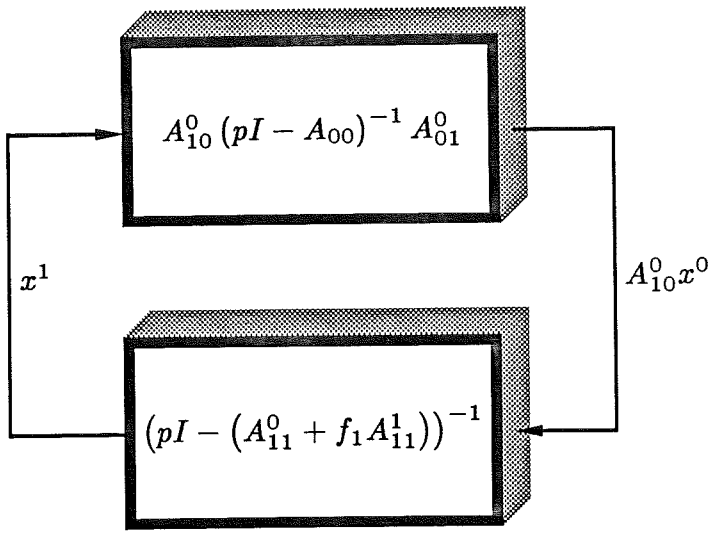

Figure 3.2. Decomposition of the system (TVSP)

Figure 3.2. By Lemma 3.6, there are constants k_1 and k_2 such that for all $T > 0$,

$$\int_0^T \langle x^1, A_{10}x^0 \rangle_Q \, dt \leq k_1 + k_2 \int_0^T \|x^1\|^2 \, dt$$

Integrating ($\surd$) from 0 to T, and using this estimatate we have

$$\frac{1}{2}\left(\|x^1(T)\|_Q^2 - \|x^1(0)\|_Q^2\right) \leq k_1 + \int_0^T \langle x^1, (k_2 I + A_{11}^0 + f A_{11}^1)x^1 \rangle_Q \, dt$$

By the construction, there is a T_0 such that $(k_2 I + A_{11}^0 + f A_{00}^1)^T Q + Q(k_2 I + A_{11}^0 + f A_{00}^1) = 2k_2 Q - fI + {A_{11}^0}^T Q + Q A_{11}^0 \leq -I$ for $t \geq T_0$. Therefore, there is a constant k_3 such that for all $T \geq T_0$ it holds that

$$\|x^1(T)\|_Q^2 \leq k_3 - 2\int_{T_0}^T \|x^1(t)\|_Q^2 \, dt$$

From Grönwall's lemma, [Desoer-Vidyasagar], it now follows that $\|x^1\|_Q^2$ goes to zero exponentially.

Since $\mathcal{S}^0$ is time-invariant and exponentially stable, also $\|x^0\|$ will go to zero exponentially. This completes the proof. ∎

Some Remarks on the Theorem

First a system-theoretic interpretation of requirement (iii) on simple null-structure is discussed. We have the following simple proposition.

PROPOSITION 3.9. *Let B and C be $n \times m$ and $m \times n$ matrices respectively, both of rank $m \leq n$. Then BC has simple null structure if and only if CB is non-singular.*

Proof. CB being non-singular is equivalent to $\operatorname{im} B \bigcap \ker C = \{0\}$. By counting dimensions, this is equivalent to $\operatorname{im} B \oplus \ker C = \mathbb{R}^n$. Since B is injective and C surjective it follows that $\operatorname{im} B = \operatorname{im} BC$ and $\ker C = \ker BC$. Hence CB is non-singular if and only if $\operatorname{im} BC \oplus \ker BC = \mathbb{R}^n$. Since the last statement by definition means that BC has a simple null structure, the proof is complete. ∎

Consider the plant (MIMOC), and assume $m = p$, and that CB is invertible. We put $A_0 := A$, $A_1 := BC$. Pick T as before. We have

$$T^{-1}AT = \begin{pmatrix} A_{00} & A_{01} \\ A_{10} & A_{11}^0 \end{pmatrix} \qquad T^{-1}BCT = \begin{pmatrix} 0 & 0 \\ 0 & A_{11}^1 \end{pmatrix}$$

It can be shown that the zeros of (MIMOC) are $\operatorname{sp} A_{00}$. Therefore, in this case the proposition contains a state space version of the root locus statement "*the finite endpoints of the root locus are the open loop zeros*".

Remark 1. The proposition also contains Tychonov's theorem on singularly perturbed systems, see [Kokotović], restricted to linear systems. □

Next, some further comments upon the extent to which the conditions (i), (ii), and (iii) are necessary for the theorem to be valid are given.

Remark 2. The condition $f \to \infty$ as $t \to \infty$ is not really used in the proof. The proof shows that there are constants k and T such that if $f(t) \geq k$ for $t \geq T$, then $\|x(t)\| \leq c_0 e^{-c_1 t}$ for $t \geq T$ and some $c_0, c_1 > 0$. □

Remark 3. Clearly we may allow f to be piece-wise real-analytic instead of real-analytic, provided that (TVSP) still has a unique solution in a suitable sense. □

The slightly unpleasant, 'technical' condition (iii), saying that A_1 is required to have simple null structure, can unfortunately not just be disposed. This will be showed by the following example.

Example 3.10. Consider the system

$$\dot{x} = \begin{pmatrix} -1 & f(t) \\ 0 & -1 \end{pmatrix} x, \qquad x(0) = \begin{pmatrix} x_1^0 \\ x_2^0 \end{pmatrix}$$

where f is a function satisfying (i). This equation has the solution

$$x(t) = \begin{pmatrix} e^{-t}x_1^0 + \int_0^t e^{-(t-s)} f(s)\, ds\, x_2^0 \\ e^{-t}\, x_2^0 \end{pmatrix}$$

Clearly x will not go to zero if $x_2^0 \neq 0$ and f grows faster than e^t. □

Also note that if the simple null-structure requirement is violated, then (TVSP) does not represent a singular perturbation decomposition of time scales.

Remark 4. The eigenvalue condition (ii) is necessary: The solution to the scalar equation $\dot{x} = f(t)x$ will have a finite, nonzero limit if and only if $x(0) \neq 0$ and $\int^{\infty} f(t)\,dt$ exists finite. □

On the use of the Theorem

In this thesis, we are not interested in time varying systems per se, but as an alternative viewpoint on the special class of nonlinear systems adaptive systems constitute.

The following theorem illustrates its use in a very clear fashion.

THEOREM 3.11. *Consider the linear, time invariant, multi-input, multi-output minimal plant* (MIMOC). *Assume that* $m = p$, *that* $\operatorname{sp} CB \subset \mathbb{C}^+$, *and that all its* $n - m$ *zeros are in the left half plane. Then, for all* $\alpha > 0$, $\beta \geq 0$, *the adaptive controller*

$$u = -ky$$
$$\dot{k} = \alpha\|y\|^2 + \beta\|u\|^2$$

will stabilize the system in the sense that

(i) $\|x(t)\|$ *will go to zero, and*

(ii) $k(t)$ *will converge to a finite limit* k_∞.

Proof. If (ii) does not hold, then Theorem 3.5 applies with $m = 1$, $A_0 = A$, $A_1 = -BC$, and $f(t) = -k(t)$, now considered as an abstract time function, defined up to a (possibly finite) time $T \leq \infty$. By root locus theory, the frozen parameter system will be stable for all sufficiently large k, so requirement (ii) of Theorem 3.5 is fulfilled. Moreover, Proposition 3.9 implise that A_1 has simple null-structure.

By Remark 2 it follows that there are constants $T_0 < T$, $c_0 > 0$, $c_1 > 0$ such that $\|x(t)\|^2 \leq c_0 e^{-c_1 t}$ for $t \in [T_0, T]$. Therefore, in this time interval, $\dot{k} = (\alpha + \beta k)\|y\|^2 \leq (\alpha + \beta k)\|C\|^2 c_0 e^{-c_1 t}$. Rearranging the terms, multiplying by an integrating factor,and integrating, it follows that k is bounded. This contradiction shows that (ii) holds—in particular, the solution to the differential equation is globally defined. If $\beta > 0$ then clearly $f(y, u, k, t) := \alpha\|y\|^2 + \beta\|u\|^2$ is L^2-compatible. For $\beta = 0$, note that since $\|y\|^2 + \|u\|^2 \leq (1 + k_\infty^2)\|y\|^2$, it holds that f, restricted to the linear subspace defined by $u(t) = -k(t)y(t)$, is L^2-compatible. Applying Corollary 3.4 (i) follows and the proof is compete. ■

Remark 5. The theorem differs from 'classical' adaptive control in two very interesting ways: First it shows that *'slow' adaptation is* not *needed for con-*

*vergent adaptive control**. The next example will illustrate this. Secondly, *no bound on the McMillan degree is required.* □

Remark 6. Another argument showing that (ii) implies (i), used in [Willems-Byrnes] and [Byrnes-Willems], is the following: First choose coordinates on the state space so that

$$C = \begin{pmatrix} 0 & I_m \end{pmatrix}; \qquad B = \begin{pmatrix} 0 \\ B' \end{pmatrix}$$

In the language of the proof of the Theorem 3.5, (ii) is exactly the statement that $x^1(.) = y(.) \in L^2$. Since $x^0(.)$ can be considered as the image of x^1 under a bounded affine operator on L^2, also $x^0(.)$, and thus $x(.)$ is in L^2. By (ii), also $A - k(t)BC$ is a bounded linear operator on L^2, so it follows that $\dot{x}(.) \in L^2$. Therefore, $\langle x, \dot{x} \rangle = \frac{d}{dt}\|x\|^2 \in L^2$, which means that $x(t) \to 0$ as $t \to \infty$. □

Example 3.12. Consider the plant (MIMOC), where

$$A = \begin{pmatrix} -1 & 2 & 3 \\ 2 & 2 & -3 \\ 1 & 3 & 2 \end{pmatrix} \quad B = \begin{pmatrix} 0 & 0 \\ 1 & 2 \\ -2 & 1 \end{pmatrix} \quad C = \begin{pmatrix} 0 & 1 & 0 \\ 0 & 0 & 1 \end{pmatrix}$$

This plant is unstable, with $\operatorname{sp} CB = \{1 \pm 2i\} \subset \mathbb{C}^+$, and its only zero located in -1, so the theorem applies. In Figure 3.4 we show a numerical simulation of the plant controlled by the controller in the theorem, with $\alpha = 1$ and $\beta = 0$. The parameter k (dashed line) and the three components of the state are shown. Figure 3.5 shows the same system for $\alpha = 1, 10, 100, 1000$. For easy comparison, the scales are selected equal in the four plots. The limiting value k_∞ turned out to be 4.68, 7.52, 17.05, and 47.56 respectively. Note that for large k, the state x_1 still decreases slowly. This is so because x_1 is exactly the mode corresponding to the zero in -1, where the single finite branch of the root locus ends. □

Remark 7. The example stems from the report [Mårtensson 1984b], which describes some numerical tools for analysis and simulation of multivariable linear systems by combining the 'non-linear differential equation language' Simnon, [Åström 1985], and [Åström-Wittenmark], with the 'matrix manipulation language' CTRL-C, [CTRL-C]. These were used in the preparation of the example above.

This path is intended to be much further developed in the forthcoming report [Holmberg, Lilja, Mårtensson], describing some more elaborate tools for

---

* It should be remarked that there are MRAC algorithms, e.g. described in [Parks], in which arbitrarily fast adaptation can take place.

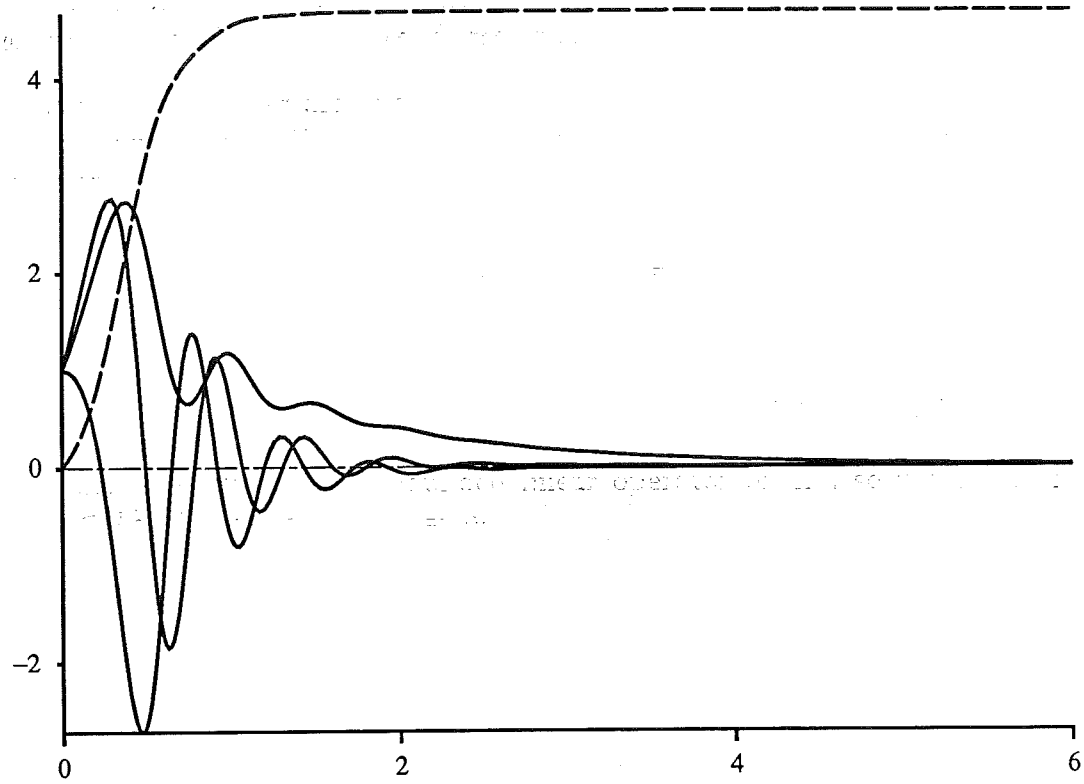

Figure 3.3. States and k for the system in Example 3.3 for $\alpha = 1$ and $\beta = 0$

investigating linear systems by combining the power of numerical methods in Simnon and CTRL-C, with symbolic manipulation in MACSYMA, and typesetting in TEX. □

Relay Controlled Systems

During the last few years, single-input, single-output plants controlled by a relay, i.e. with the feedback control law

$$u = -\operatorname{sign} y$$

have regained interest. This stems especially from application to *autotuning* of standard PID-controllers, which is a method, motivated by describing function theory, for approximate determination of the intersection of the Nyquist curve and the negative real axis by letting the system oscillate in a limit cycle. From this information, the PID-parameters are calculated using heuristic formulas, such as the Ziegler-Nichols' rules. See e.g. the references [Åström-Hägglund], [Ziegler-Nicols].

Somewhat surprising, we will use Theorem 3.5 to prove a result on the stability of the origin for a certain class of relay controlled plants. Together with well known results, this shows that there are plants which possess a locally, but not globally, stable limit cycle.

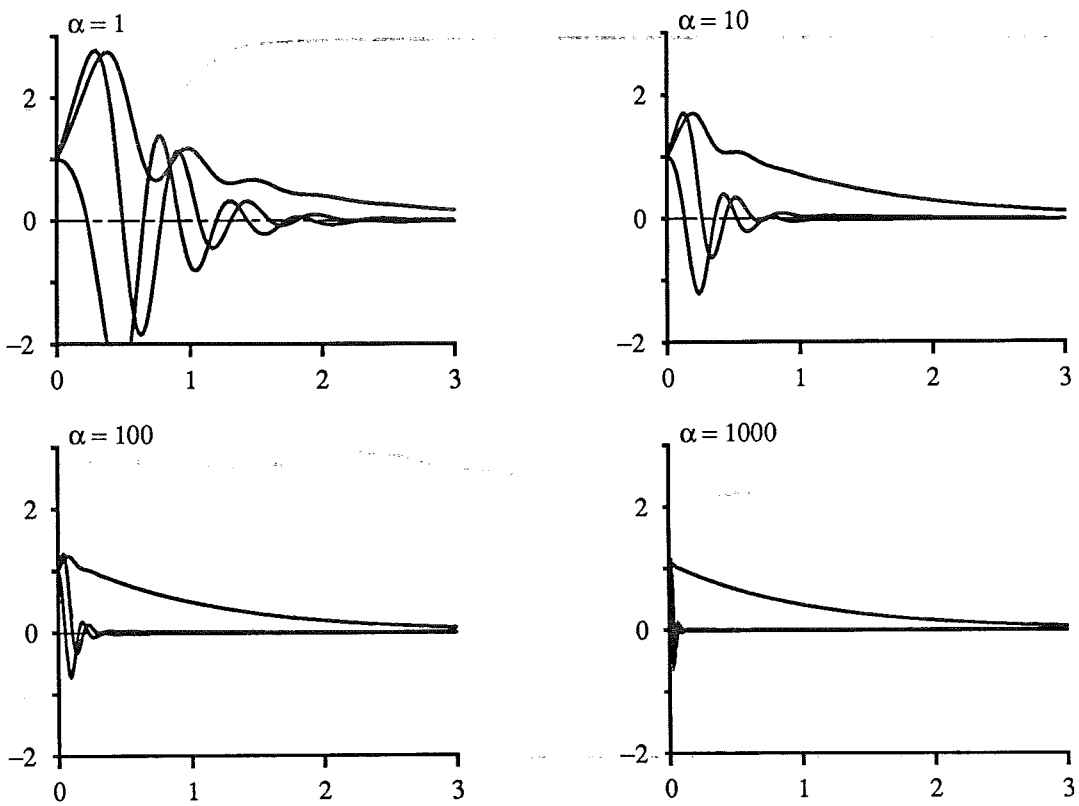

Figure 3.4. States of the same system for $\alpha = 1, 10, 100, 1000$

PROPOSITION 3.13. *Consider the minimal, time invariant, single-input, single-output linear plant*

$$\begin{aligned} \dot{x} &= Ax + bu, \qquad & x \in \mathbb{R}^n, \qquad & u \in \mathbb{R} \\ y &= cx & y \in \mathbb{R} & \end{aligned}$$

and assume that the instantaneous gain $cb > 0$, and that all zeros are in the left half plane. Then, with the control law $u = -\operatorname{sign} y$ the closed loop system will have the origin as an asymptotically stable equilibrium.

Proof. By putting

$$f(t) = \begin{cases} -\dfrac{\operatorname{sign} y}{y} & \text{for } y \neq 0 \\ 0 & \text{for } y = 0 \end{cases}$$

$$u = fy$$

it is clear how to consider the relay control as a time-varying linear feedback. Taking Remarks 2 and 3 on page 33 into account, we may apply Theorem 3.5. So there is a neighborhood $\mathcal{U} \subset \mathbb{R}^n$ such that if $x(t) \in \mathcal{U}$ for some t, then $x \to 0$ as $t \to \infty$. This proves the proposition. ∎

Remark 8. Note that the solution to the differential equation must be interpreted in a weak sense. This is natural since, from a classical standpoint, *no* solution exist for the differential equations describing some relay control systems. □

3.5 Switching Functions

In this section we will deal with the following problem: We want to adaptively stabilize an unknown plant G of type (MIMOC), for which we know that G belongs to a set $\mathcal{G}$. Here $\mathcal{G}$ is a set of plants for which there exists a finite or countable set of controllers $\mathcal{K}$, such that for any $G \in \mathcal{G}$, there is at least one controller $K \in \mathcal{K}$ such that the control law $u = Ky$ will stabilize G.

A heuristically appealing algorithm for stabilizing the unknown plant G would be to try each one of the K's for ε units of time, until we find one that stabilizes the system. Unfortunately, as will be shown in Chapter 4, this is possible if and only if we know a bound on the McMillan degree of the plants belonging to $\mathcal{G}$. Instead we try each one of the controllers for some time, according to some criterion, in a way that will hopefully converge, and thus will switch among the controllers only a finite number of times. A *switching function* is a criterion of this type.

First we will give a 'historical' overview of how this concept has been used. The next subsection contains definitions of the relevant concepts. The main result on stabilization by switching function controller is the content of the last subsection.

This section deals with continuous time plants. It is from these the concepts have emerged. We outline a discrete time version of the main result in a remark.

How the Concept of Switching Functions Emerged

The concept of switching function was first introduced in [Willems-Byrnes], where the set of plants $\mathcal{G}$ under consideration was single-input, single-output, minimum phase plants of relative degree one. If follows from Theorem 3.11 that for any such $G \in \mathcal{G}$, either the controller

$$\begin{aligned} u &= ky \\ \dot{k} &= y^2 \end{aligned} \tag{$\heartsuit$}$$

or the controller

$$\begin{aligned} u &= -ky \\ \dot{k} &= y^2 \end{aligned} \tag{$\diamondsuit$}$$

will stabilize G depending on the sign of the "instantaneous gain" $cb \neq 0$. As is well known, if we know sign cb, we would use ($\heartsuit$) if $cb < 0$, and ($\diamondsuit$) otherwise.

Byrnes and Willems showed that there is an algorithm stabilizing *all* systems in $\mathcal{G}$, based on switching between the two controllers ($\heartsuit$) and ($\diamondsuit$). We give the full formulation here.

THEOREM 3.14 [WILLEMS-BYRNES]. *Let $s(k) : \mathbb{R} \to \mathbb{R}$ be a function satisfying*

(i) s is bounded on compact sets,

(ii) s is sufficiently regular in order for the differential equation describing the closed loop system to have a unique solution, at least in a weak sense,

(iii) Using the notation

$$S(k) = \int_0^k s(\sigma)\sigma \, d\sigma$$

we have that $\overline{\lim}_{k\to\infty} \frac{1}{k}S(k) = \infty$, and $\underline{\lim}_{k\to\infty} \frac{1}{k}S(k) = -\infty$.

Then, for all $G \in \mathcal{G}$, with $\mathcal{G}$ as above, the controller

$$\begin{aligned} u &= s(k)ky \\ \dot{k} &= y^2 \end{aligned}$$

will stabilize G in the sense that $\lim_{t\to\infty} \|x\| = 0$, while $\lim_{t\to\infty} k = k_\infty < \infty$.

As an example, the switching law

$$s(k) = \begin{cases} 1 & (2n)^2 \le k < (2n+1)^2; \quad n \in \mathbb{N} \\ -1 & (2n+1)^2 \le k < (2n+2)^2; \quad n \in \mathbb{N} \end{cases}$$

was given, which clearly switches between ($\heartsuit$) and ($\diamondsuit$).

Remark 1. A function s satisfying requirements (ii) – (iii) is by some authors called a Nussbaum function, [Morse 1984b], after the important paper [Nussbaum], in which the problem above, restricted to systems of degree one, was solved for the first time. We will adopt this term here. □

Remark 2. There are two kinds of Nussbaum functions: bounded and unbounded. Actually, the recent contributions on related questions are divided into two disjoint sets: the ones using bounded Nussbaum functions, and the one using unbounded. For s being a bounded Nussbaum function, (iii) can in a intuitive language be rephrased as *s oscillates slower and slower.* This is reminiscent of the concept of 'slow adaptation'. For s unbounded, this is not so obvious. However, via a transformation of the time scale, we see that these two approaches are closely related for large k. □

In this thesis, the term "switching function" will denote a Nussbaum-like function taking on only a finite or countable number of values, used to discriminate between controllers in a finite or countable set.

In [Byrnes-Willems] a multivariable generalization was presented, namely to square, minimum phase plants with CB invertible. The algorithm consisted of switching between controllers of the type

$$\begin{aligned} u &= kK_i y \\ \dot{k} &= \|y\|^2 \end{aligned}$$

where, for one i, $\operatorname{sp} BK_iC \subset \mathbb{C}^+$. Their controller read

$$\begin{aligned} u &= kK_{s(k)} y \\ \dot{k} &= \|y\|^2 \end{aligned}$$

where $s(k) : \mathbb{R} \longrightarrow \mathbb{N}$ is a 'switching function', satisfying a particular requirement of slow change. We will return to this approach in Chapter 6.

In the remainder of this section, we introduce the pertinent concepts formally, and prove a result on switching function based adaptive stabilization. In contrast to previous work, this is not necessarily tied to high-gain stabilization.

Definitions

Some definitions will now be presented. We start with the concept of switching function.

Definition 3.15. Let $s(k)$ be a function of a real variable, and $\{\tau_i\}_{i=0}^{\infty}$ a sequence of increasing real numbers. For $r = 2, 3, \ldots, \aleph_0$, we shall say that $s(k)$ is a *switching function of rank r* with *associated switching points* $\{\tau_i\}$, if $s(k)$ is constant for $k \notin \{\tau_i\}$, and, for all $a \in \mathbb{R}$, $s(\{k \geq a\}) = \{1, \ldots, r\}$. Further, just as a notational convenience, we require a switching function to be left continuous. □

Remark 3. Note that it follows from the definition that infinity is the only limit point of the sequence $\{\tau_i\}$. □

By switching function controller we shall mean the following.

Definition 3.16. For $r = 2, 3, \ldots, \aleph_0$, let $\mathcal{K} = \{K_1, \ldots, K_r\}$ be a set of controllers, with $\operatorname{card} \mathcal{K} = r$. Let f be a Lipschitz-continuous function and $s(k)$ a switching law of rank r. A controller of the type

$$\begin{aligned} u &= K_{s(k)} y \\ \dot{k} &= f(y, u, k, t) \end{aligned} \tag{SFC}$$

will be called a *switching function controller.* □

Remark 4. Note that in general the control law $u = K_i y$ must be interpreted in an operator-theoretic way, not as a matrix multiplication. □

Remark 5. The way (SFC) is written requires all the controllers $K_1, \ldots, K_r$ to be simultaneously connected to the output of the plant, while the switching law chooses which controller's output to connect to the plants input, at least if the K_i's contain dynamics. For r large or infinite, this is clearly not a practical way of implementing a controller. However, if all the controllers have a (not necessarily minimal) realization on a state space of a certain dimension, then this difficulty can be circumvented by considering the augmented plant as in Section 3.2, and considering the controllers as static controllers. □

For further reference, we shall make clear what we mean by a set of regulators stabilizing a set of plants in some sense.

Definition 3.17. Let f an L^2-compatible function, $\mathcal{G}$ a set of plants of the type (MIMOC), all of which having the same number of inputs and outputs, and $\mathcal{K}$ a set of controllers of compatible dimensions. For $k_0 \in \mathbb{R}$, let k be the unique solution to $\dot{k} = f(y, u, k, t)$, $k(0) = k_0$. We shall say that $\mathcal{K}$ *is stabilizing for* $\mathcal{G}$ *with respect to* f (or *is* f*-stabilizing for* $\mathcal{G}$) if the following holds: For any plant $G \in \mathcal{G}$ there is a controller $K \in \mathcal{K}$ and constants c, T such that the control law $u = Ky$ will stabilize G in the sense that

$$\int_{t_0}^{\infty} f(y, u, k, t)\, dt \leq c\|x(t_0)\|^2$$

for all $x(0) \in \mathbb{R}^n$ and for all $k_0 \in \mathbb{R}, t_0 \geq T$. □

Remark 6. In particular, the left hand side stays finite, so it follows from Corollary 3.4 that $x(t) \to 0$ as $t \to \infty$. It also follows that the solution to the differential equation is indeed globally defined. □

Remark 7. By considering singleton sets in the definition, it is clear what we shall mean by the statement *the controller* K *stabilizes the plant* G *with respect to* f. □

The Main Result on Switching Functions

With the machinery developed so far, we can now easily prove the following results on switching function controllers. Note that, for s being some particular switching function, Theorem 3.14 follows immediately.

THEOREM 3.18. *Suppose that f is an L^2-compatible function, and that the set of controllers $\mathcal{K}$ is f-stabilizing for the set of plants $\mathcal{G}$. Then there is a sequence $\sigma = \{\tau_i\}$ such that for $s(k)$ any switching function of rank equal to* card $\mathcal{K}$, *with associated switching points $\{\tau_i\}$, the control law* (SFC) *will stabilize any plant $G \in \mathcal{G}$ in the sense that for all $x(0), k(0)$, it holds that*

$\|x(t)\| \to 0$ as $t \to \infty$, while k converges to a finite limit. Further, there is a 'universal' switching point sequence σ, independent of the individual set $\mathcal{G}$.

Proof. The steps in the proof are the following: To say that the theorem is false is to say that for all switching sequences, there is a switching function with the stated properties such that stabilization does not take place. It will be shown that, if stabilization does not take place, the sequence $\{\tau_i\}$ has to satisfy a certain requirement, depending on $\mathcal{G}$, namely ($\pounds$) below. A sequence σ is given, with the property that for all allowed $\mathcal{G}$, the requirement is violated. We conclude that with this very sequence stabilization takes place, which will establish the theorem.

From Corollary 3.4, and since k is increasing, it follows that in order to show stabilization it is enough to show that k is bounded. By the definition of switching function, this is equivalent to the statement that s, considered as a function of time, only switches a finite number of times. So we assume that this is not the case, and investigate the implications of this assumption.

Consider an arbitrary, but fixed, $G \in \mathcal{G}$. Say that controller K_i is f-stabilizing for G, and that the controller K_i is used with start at time t_0. That is, $k(t_0) = \tau_j$, where $s(\tau_j) = i$. By the assumptions, this will happen for arbitrarily large k and t. Therefore, with T as in Definition 3.17, we shall make the assumption that $t_0 \geq T$.

The assumption that s switches an infinite number of times implies that we will reach the next switching point τ_{j+1} after a finite time. But this is exactly the statement that

$$\int_{t_0}^{\infty} f(y,u,k,t)\,dt \geq \tau_{j+1} - \tau_j \qquad (¿)$$

where the left hand side, by assumption finite, is evaluated as if the controller K_i was used forever. We will show that the sequence $\{\tau_i\}$ can be taken in a way so that (¿) cannot be satisfied for j sufficiently large, which will prove the theorem.

By definition of f being L^2-compatible, there is a c, so that the left hand side of (¿) can be estimated as

$$\int_{t_0}^{\infty} f(y,u,k,t)\,dt \leq c\|x(t_0)\|^2$$

Using the same argument as in the proof of Corollary 3.4, it follows from Lemma 3.1, part(i), that for all $x(0)$, there exist constants c_0 and c_1 such that

$$\|x(t)\|^2 \leq c_0 + c_1 k(t)$$

for all t. Substituting $t = t_0$, $k = \tau_j$, and combining the last two estimates, we see that a necessary condition for (¿) to be satisfied, is that

$$\tau_{j+1} - \tau_j \leq cc_0 + cc_1\tau_j \qquad (\pounds)$$

But there are sequences $\{\tau_i\}$ such that, for any c, c_0, c_1, the statement $(\pounds)$ will be false for all sufficiently large j. This is the case e.g. for the sequence defined by

$$\tau_{j+1} = \tau_j^2, \qquad i = 2, 3, \ldots$$
$$\tau_1 = 2$$

Therefore, with a switching sequence like this chosen, the assumption of s to switch infinitely many times leads to a contradiction. Since G was arbitrary, the proof is complete. ■

Remark 8. In discrete time all concepts and definitions make sense, after some obvious changes. Since the theorem is based on Lemma 3.1, together with its corollary, both of which having a discrete time version, there is clearly a discrete time version of the theorem. □

3.6 Conclusions

In this long chapter we have built up most of the tools which will be used to harvest the results in the later chapters.

In Section 2 we showed that, once the order of the controller dynamics is determined, the dynamic feedback problem is a special case—however, somewhat nongeneric—of the static feedback problem. This leads to conceptual and notational simplifications in the sequel.

In Section 3 we proved a lemma that provides an estimate of the state of the plant, expressed in what will most likely be the parameter of an adaptive controller. The corollary showed that, under a mild condition, if controller stays bounded, then it stabilizes the plant.

A theorem on 'fast' time-varying singularly perturbed systems was presented in Section 4. This was used to prove a theorem, which under a condition reminiscent of relative degree one showed the stability on 'cranking up the gain'-type stabilizing algorithms.

The last section covered the concept of switching functions. Definitions and a theorem were given. The theorem can be used for example to partition the problem of stabilizing a high-gain stabilizable plant into two problems: to find an (a priori bounded) precompensator such that the precompensated system will be stable under the control law $u = ky$ for large k, and then turning up the gain. This problem will be further dealt with in Chapter 6.

But there are sequences $\{\tau_i\}$ such that, for any c, c_1, c_2, the statement [illegible] false for all sufficiently large [illegible] The [illegible] the case [illegible] sequence [illegible]

[illegible]

[illegible] cor[illegible]

[illegible]

In Section [illegible] provide a lemma that [illegible]

stays bounded [illegible]

[illegible]

4

Meta Results on Adaptive Stabilization

4.1 Introduction

The present chapter is devoted to results on adaptive stabilization independent of the particular algorithm chosen. The question "what can be achieved and what cannot be achieved by adaptive control" is addressed.

Adaptive control deals with control of plants which are known only imprecisely. It is obvious that whatever can be done adaptively can be done if we know the plant. A not-so obvious question is: Given the existence of a smooth adaptive controller of (linear) dimension l, stabilizing the plant G, is there a constant, linear, time-invariant controller of dimension l which also is stabilizing for G? This question is answered in the affirmative in a theorem by C. I. Byrnes. This result constitutes one half of Theorem 4.1, which gives the complete characterization of necessary and sufficient a priori information for adaptive stabilization, namely the order of any stabilizing controller for the set of plants under consideration. The second half is the construction of an adaptive controller which does the job, with nothing but this a priori information. A new proof is given in Section 4.2. The still unsettled question of the minimal order of a stabilizing controller is then discussed. The multivariable Nyquist criterion is proved and used.

The idea of adaptive stabilization by stability indicators is introduced in Section 4.3. Despite its simplicity, according to the author's knowledge, this idea has not occured in the literature before. We show that this idea works if and only if an a priori bound on the McMillan degree of the plant is known.

The following section discusses continuous versus discontinuous controllers. It is shown how to make any switching function controller continuous by interpolating away the discontinuities.

Section 4.5 discusses different functions f that govern the growth rate of the parameter k according to $\dot{k} = f(y, u, k, t)$. We demonstrate a case where the previous approach with $f = \|y\|^2$ is not satisfactory.

Section 4.6 treats similarities and differences of continuous time and discrete time control problems, with application to adaptive control. Sampling of plants is discussed. The section ends with a slightly disappointing negative result on adaptive stabilization of continuous time plants by a sampled controller with fixed sample rate.

In the last section it is shown that it is straightforward to solve a restricted version of the tracking problem by introducing integrators in the loop in classical engineering manner. Constant, nonzero reference values can thus be tracked with zero error asymptotically.

4.2 Necessary and Sufficient A Priori Knowledge

This section contains the complete characterization of the a priori knowledge needed to adaptively stabilize an unknown plant, namely the order of *any* fixed linear controller capable of stabilizing the plant. The necessity was proved by C. I. Byrnes and U. Helmke in [Byrnes 1985], while the sufficiency was proved in [Mårtensson 1985a]. A new proof of the sufficiency part is given, based on the results on switching functions of the previous chapter. The still unsettled question of the lowest degree of a (fixed) stabilizing controller for a given plant is discussed later.

The Main Theorem

The following theorem is the most general result on adaptive stabilization in this thesis.

THEOREM 4.1 (BYRNES-MÅRTENSSON). *Let $\mathcal{G}$ be a set of plants of the type* (MIMOC). *The necessary and sufficient a priori knowledge for adaptive stabilization, as defined in Chapter 2, is knowledge of an integer l such that for any plant $G \in \mathcal{G}$ there exists a fixed linear controller of order l stabilizing G.*

Proof of Necessity. See [Byrnes 1985]. ∎

The original proof of the sufficiency of this a priori information is given in Chapter 5. The result can also be obtained by the method of switching functions introduced in Section 3.5. This gives the following proof. Since explicit algorithms will be given in the following chapters, we give the proof in a non-constructive fashion.

Proof of Sufficiency. The proof is a fairly straightforward application of Theorem 3.18 on page 41. Consider a controller in the spirit of Section 3.2, namely as a constant $M \times P$-matrix, where $M := m + l$, and $P := p + l$. The set of controllers $\mathcal{K}$ is taken to be all such with rational coefficients, i.e. $\mathcal{K} := \mathbb{Q}^{M \times P}$. Let f be defined as $f(y, u, k, t) = \|y\|^2 + \|u\|^2$. This is an L^2-compatible function. A stabilizing controller places the closed loop poles in the open left half plane. The poles depend continuously of the parameters in the controller. Since $\mathcal{K}$ is dense in the space of all controllers of order l, i.e. $\mathbb{R}^{M \times P}$, $\mathcal{K}$ is thus f-stabilizing for $\mathcal{G}$. Theorem 3.18 establishes the existence of a switching function such that the corresponding switching function controller (SFC) stabilizes any plant in $\mathcal{G}$. This completes the proof. ∎

Remark 1. By some additional effort, an explicit algorithm based on the ideas in the proof can be constructed. □

Remark 2. The report [Mårtensson 1984a] gives a simple, discrete time controller based on similar ideas, together with an independent proof and a simulation. It is based on searching through a pseudo-random sequence on $\mathbb{R}$, and stabilizes all first order plants $x(t+1) = ax(t) + bu(t)$ for which $b \neq 0$. □

In Section 4.4, it will be shown that the controller can also be taken to be continuous by 'smoothing-out' the discontinuities. Another approach is presented in Chapter 5.

On the Minimal Order of a Stabilizing Controller

The previous subsection raises the question "What determines the minimal order of a stabilizing controller for a certain, known, plant"? This question is still unsettled. Some preliminary results are given in [Brockett-Byrnes], [Byrnes-Anderson 1983, 1984]. It should be noted that their results only apply to the generic plant. That is, given a particular plant, no conclusion can be inferred.

From [Brasch-Pearson], it follows that $n - \max(m, p)$ is always an upper limit. On the other hand, there are systems for which the null-controller $u \equiv 0$ stabilizes, namely the stable systems. Minimum phase, single-input, single-output plants of relative degree $r > 0$ can always be stabilized by a controller of order $r - 1$, as can easily be shown.

For the purpose of the present work, it would be desirable to know that it is harmless to over-estimate the order required. This is the content of the next proposition.

PROPOSITION 4.2. *Assume that there exists a proper controller $K(s)$ of order l_0 stabilizing the strictly proper plant $G(s)$. Then, for all $l \geq l_0$, there exists an open set of controllers $K'(s)$ of order l, stabilizing $G(s)$.*

"Open set of controllers" shall of course mean open with respect to the topology induced by, for some N, via the coefficients identifying the polynomial matrix $K(s)$ with a point in $\mathbb{R}^N$, equipped with the norm topology.

The proof relies on the multivariable Nyquist criterion. In contrast to the standard Nyquist criterion, originally given in [Nyquist], this has not yet found its way into widely spread textbooks. Also, since there does not seem to be an agreement of exactly what it shall mean, we formulate and prove the version used here. A similar treatment can be found in [Postlethwaite-MacFarlane]. A generalization to rectangular plants is given in [Brockett-Byrnes].

The Multivariable Nyquist Criterion

We first introduce some notation.

Notation. Let $p \in \mathbb{C}$, $f : \mathbb{C}^* \longrightarrow \mathbb{C}^*$ a meromorphic function, and Γ a positively oriented Jordan curve in $\mathbb{C}$. By $N(p, f, \Gamma)$ we shall denote the number of encirclements of p of the curve $f(\Gamma)$ while Γ is traversed in the positive direction. More precisely,

$$N(p, f, \Gamma) := \int_{f(\Gamma)} \frac{dw}{w-p} = \int_{\Gamma} \frac{f'(z)}{f(z)-p} dz$$

The curve Γ will in the sequel mean the Nyquist contour

$$\Gamma = \{i\omega\}_{\omega=-\infty}^{\infty} \bigcup \{Re^{i\theta}\}_{\theta=-\pi/2}^{\theta=\pi/2}$$

traversed in the counter-clockwise direction, and where $R > 0$ is large enough. □

Remark 3. Note that we are using the mathematical, rather than the engineering practice in orienting the Nyquist contour. This means that the Nyquist curve is traversed from higher to lower frequencies, which is annoying for an engineer. □

THEOREM 4.3 ("THE NYQUIST CRITERION FOR SQUARE MULTIVARIABLE PLANTS"). *Consider the square $m \times m$ plant $G(s)$, controlled by the control law $u = -ky$. Assume that $G(s)$ has no poles on the imaginary axis and exactly P poles in the open right half plane. Then the closed loop system is stable for all k such that the "Nyquist curve" $\det G(s)$ when s traverses the Nyquist contour Γ encircles $-1/k$ exactly $-P$ times. That is, if and only if*

$$N(-\frac{1}{k}, \det G(s), \Gamma) = -P$$

Proof. The closed loop poles are the zeros of the return-difference determinant $\det(I + kG(s))$. By the principle of the argument, the closed system is stable if and only if $N(0, \det(I + kG(s)), \Gamma) = -P$. But, at least formally, we can rewrite this expression as

$$\begin{aligned} N(0, \det(I + kG(s)), \Gamma) &= N\Big(0, \prod_i \lambda_i(I + kG(s)), \Gamma\Big) \\ &= \sum_i N(0, \lambda_i(I + kG(s)), \Gamma) = \sum_i N\left(-\frac{1}{k}, \lambda_i(G(s)), \Gamma\right) \\ &= N\Big(-\frac{1}{k}, \prod_i \lambda_i(G(s)), \Gamma\Big) = N\left(-\frac{1}{k}, \det(G(s)), \Gamma\right) \end{aligned}$$

where $\lambda_i(M)$ denotes the i-th eigenvalue of the matrix M. To complete the proof, it only remains to validate the steps above. Unfortunately, the quantity $N(0, \lambda_i(I + G(s)), \Gamma)$ does not make sense in general, not even disregarding the ordering of the i's. This is because the λ_i's are algebraic functions on an m-sheeted Riemann surface. If this Riemann surface has branch points on the imaginary axis, the winding number cannot be given a meaning. However, if the Riemann surface lacks branch points on the imaginary axis, the winding number does make sense, the computation is justified and the proof complete. The branch points are given by the discriminant of the numerator of $\det(I + kG(s))$, which is a polynomial in s and the coefficients of $G(s)$. A suitable, arbitrarily small perturbation of the coefficients in $G(s)$ will thus move the zeros of this polynomial away from the imaginary axis. The proof is complete. ∎

Remark 4. Note the explicit character of our version of the theorem, namely that it suffices to draw *one* curve, which answers the stability question *for all* k's, just like the standard scalar Nyquist criterion. □

We now return to the proof of the proposition.

Proof of Proposition 4.2. Break the loop at the output of the plant and consider the strictly proper, square 'plant' $G(s)K(s)$. Apply the multivariable Nyquist criterion to this 'plant'. With $k = 1$ it follows from the assumptions that the closed system is stable. Now put in front of the plant the 'controller'

$$\bar{K}_T(s) = \operatorname{diag}\left\{\frac{1}{(Ts+1)^{l_1}}, \ldots, \frac{1}{(Ts+1)^{l_m}}\right\}$$

where $T > 0$ and $\sum l_i = l - l_0$. Note that $\|\bar{K}_T(i\omega)\|_2 < 1$ for all $\omega \in \mathbb{R}$. By choosing T large enough, for every $C > 0$, $\min_{|s| \le C} \|\bar{K}_T(s)\|_2$ can be made arbitrarily close to 1. That is, $\bar{K}_T$ can have arbitrarily small effect on every part of the Nyquist curve that corresponds to a finite interval of the imaginary

axis. Since the plant is strictly proper, there is an ω_0 such that the part of the Nyquist curve corresponding to $\omega > \omega_0$ will stand arbitrarily large multiplicative perturbation downwards without rupturing stability. Thus, for T sufficiently large the winding number is unchanged, i.e.

$$N(-1, \det G(s)K(s)\bar{K}_T(s), \Gamma) = N(-1, \det G(s)K(s), \Gamma)$$

By the same arguments, the winding number is unchanged for sufficiently small perturbations of the coefficients of the controller $K(s)\bar{K}_T(s)$ This completes the proof. ■

The proof has an interesting corollary.

COROLLARY 4.4. *For any plant $G(s)$, and any prescribed 'high-frequency roll-off' r, there is a controller $K(s)$ stabilizing the plant and having 'high-frequency roll-off' r. This means that there are constants C and s_0 such that*

$$\|K(s)\| \leq C|s|^{-r}; \quad |s| \leq s_0$$

A fast high-frequency roll-off may be desired for practical reasons, to decrease the sensitivity to noise, or to avoid excitation of resonances or other higher order dynamics.

Remark 5. Another way of seeing this result is that if $G(s)$ is stabilizable, then the 'plant' $s^{-r}G(s)$ is of course also stabilizable. This latter approach however leads to higher degree in the controller. □

4.3 Adaptive Stabilization by Stability Indicators

The concept of adaptive stabilization by using stability indicators is introduced in this section. Despite its simplicity, this idea seems to be new. The main result will be that this is possible if and only if an a priori bound on the McMillan degree of the plant is known.

The Basic Idea and Some Definitions

A stability indicator is some criterion for determining if an unknown autonomous system is stable by investigating the output from the system. Assume that we have a finite or countable set of controllers $\mathcal{K}$, such that there is at least one controller $K \in \mathcal{K}$ stabilizing the plant G under consideration. We may for example use the controllers with rational coefficients. Then we try each on them for ε units of time, and use the stability indicator to tell when a stablizing controller is found. At this point we abort the 'adaptation' and stay

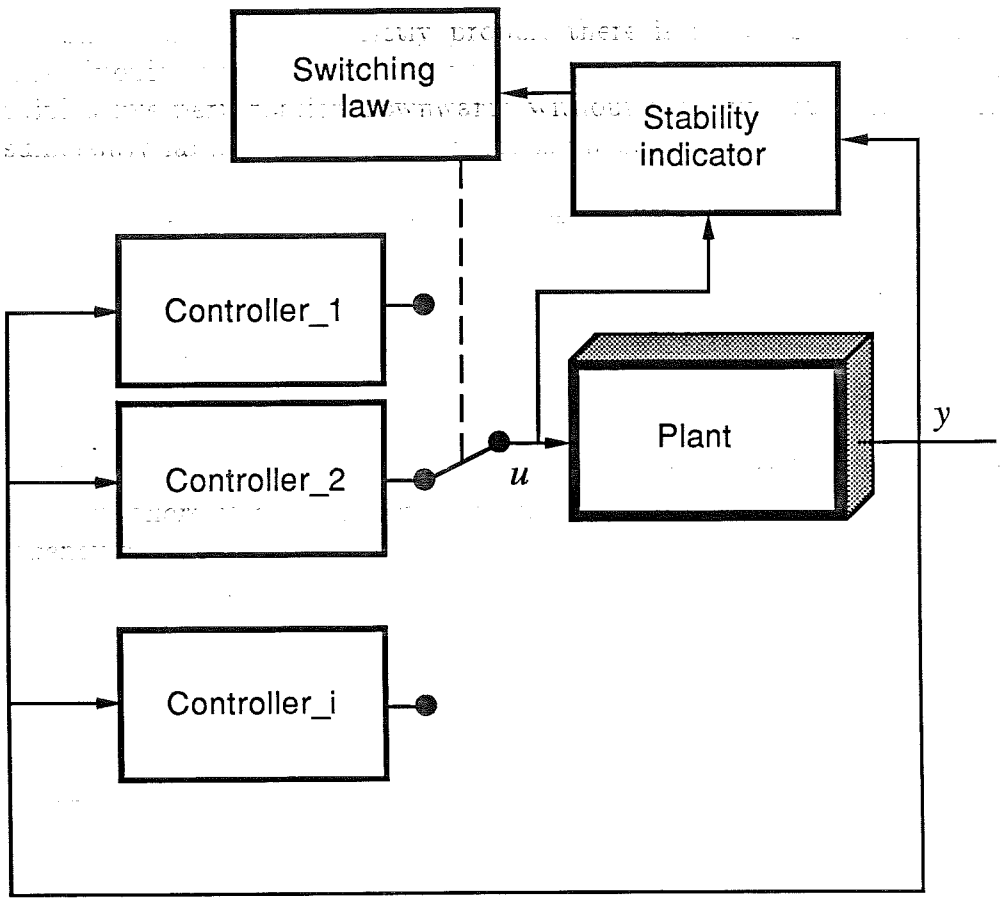

Figure 4.1. Adaptive Stabilization by Stability Indicator

with that controller forever. The plant has been adaptively stabilized. The setup is illustrated in Figure 4.1.

Before proceeding we give a very simple example where it is almost trivial to find a perfect stability indicator.

Example 4.5. Consider the set of autonomous first order systems, i.e.

$$\dot{y} = ay$$

The system is stable if and only if $a < 0$, which can be checked on y by forming $\dot{y}/y$. Thus the system is stable if and only if $\dot{y}/y < 0$. □

First some preliminary remarks:

(i) The multivariable problem is no harder than the scalar, since we are not considering any inputs. If one of the outputs indicates that the system is unstable, it is unstable.

(ii) One might naively suggest: "Just use the definition of a stable linear system, and check whether the output goes to zero or not". The problem is of course that this cannot be determined in a finite time.

(iii) It follows from the identity theorem for analytic functions, that if the output is known on a set of times containing a limit point, then the output and thus the generating differential equation is uniquely determined. However, this is on an abstract level only, and requires an infinite amount of information. It is thus not possible to implement it in e.g. a digital computer.

A more sensible question is whether there exists a stability indicator utilizing only finitely many measurements of the output. This will be made strict in the next definition. The modern standpoint of considering a measurement of a physical quantity not as a function, but as a continuous linear functional—i.e. a distribution—is adopted. A feasible stability indicator operates on finite segments of the output. For simplicity, it is assumed that this is the time interval $[0,1]$.

The following definition is an attempt to cover the intuitive concept of testing on some quantities on the output, and concluding "stability" if and only if these quantities have a certain property. Compare with the example given above. Because of comment (i), only the scalar problem is considered.

Definition 4.6. Let the output space $\mathcal{Y} = \mathcal{Y}[0,1]$ be considered as the linear space of (scalar) test functions $\mathcal{E} = \mathcal{C}^\infty(\mathbb{R})$, restricted to the interval $[0,1]$. By a *measurement* we shall mean a continuous linear functional on $\mathcal{Y}$, i.e. an element f in the dual space $\mathcal{Y}^*$, $f : \mathcal{Y} \longrightarrow \mathbb{R}$. A *stability indicator of order k* is a pair (f, Ω), where $f = (f_1, \ldots, f_k)^T$ is a collection of k measurements, and $\Omega \subset \mathbb{R}^k$ is an open subset, with the property that $f(y) \in \Omega$ if and only if y is the output of a stable plant. □

Remark 1. It does not imply any more generality to form continuous function of the measurements, and testing on these instead. □

The main result on adaptive stabilization by stability indicator is that this is possible if and only if the a priori knowledge of the plant includes a bound n^* on its McMillan degree. This will be shown in the following two subsections respectively.

Known Bound on the McMillan Degree

In contrast to the rest of this thesis, the discrete time case is treated first. The continuous time case will then be dealt with either by using sampled theory, i.e. considering only equidistant samples of the output. Slightly counter-intuitive, this will be possible without resorting to arbitrarily short sample intervals. The continuous time results will also be derivable by methods (algebraically) similar to the discrete time case.

The Discrete Time Case

In every textbook on identification of linear systems, e.g. [Ljung], formulas pertaining to our problem are given. We do not reproduce them here, but will

just give some comments. Note that the single-input, single-output identification problem is really more than we need, since we are, by the remark above, completely satisfied with autonomous systems with one output. Also, even if these formulas in general are given in a stochastic framework, they sure do work in this deterministic environment, and actually converge in a finite number of steps.

The Continuous Time Case

First the most reasonable method to be employed in a real-world situation will be discussed, namely by sampling the output of the continuous time system, i.e. picking out its values for equidistant times $t = h, 2h, \ldots$. Since only the output segment $\mathcal{Y} = \mathcal{Y}[0,1]$ is considered, this is a linear mapping

$$\sigma_h : \mathcal{Y}[0,1] \longrightarrow \mathbb{R}^n$$

where $n := \lfloor 1/h + 1 \rfloor$. $\mathcal{Y}$ and $\mathbb{R}^n$ are vector spaces; in particular, they are additive groups. By the homomorphism theorem, $\mathbb{R}^n \cong \mathcal{Y}/\ker\sigma_h$. This is to say that we can exactly reconstruct the continuous time plant modulo (additive) modes giving output in $\ker\sigma_h$. By definition, $\ker\sigma_h$ consists of exactly the functions which are zero at the sampling instances $\{kh\}_{k=-\infty}^{\infty}$. Since $y(t)$ is the solution of a linear, time-invariant differential equation with real coefficients, it is a linear combination of products of powers, (real) exponentials, and shifted sines. Only the sines can account for infinitely many zeros. Further, there can be at most $\lfloor n^*/2 \rfloor$ different sines. Therefore, the set $\{h : \bar{y}(kh) = 0, k \in \mathbb{Z} : \bar{y}$ is any mode of $y\}$ can have dimension at most $\lfloor n^*/2 \rfloor$ over $\mathbb{Q}$. So, by using $q := \lfloor n^*/2 \rfloor + 1$ different sample rates $h_1, \ldots, h_q$, where $\{h_1, \ldots, h_q\}$ are linearly independent over the rationals, the continuous time system can be identified from the samples. We have proved the following proposition.

PROPOSITION 4.7. *Let $\mathcal{G}$ be the set of all plants of the type* (MIMOC) *for which it holds that for a known number n^*, for all $G \in \mathcal{G}$ its McMillan degree is less that or equal to n^*. Furthermore, let $u \equiv 0$. Then, if the initial conditions are such that all dynamics is exited, by considering sampled output we can discriminate between any two plants G_1 and $G_2 \in \mathcal{G}$ by using data from at most $\lfloor n^*/2 \rfloor + 1$ different sample rates, provided that no two of these sample rates have a rational relationship with each other.*

Remark 2. Note that, in contrast to the usual sampling theorem, it is not necessary to let the sample period go to zero to trace arbitrarily fast dynamics. However, infinite precision in the measurements was assumed. □

Remark 3. A proof of the standard sampling theorem, [Shannon], is easily constructed along the same line, i.e. by considering the sampling as a homomorphism between vector spaces. It only remains to show that $\ker\sigma$ is trivial

if $\mathcal{Y}$ only contains functions whose Fourier transform has sufficiently small support. Say that the time-function f is sampled when $t \in \mathbb{Z}$, and that its Fourier transform $\hat{f}(\omega) = 0$, $|\omega| \geq \frac{\pi}{2}$. To say that $f \in \ker \sigma$ is, by definition, to say that for $k \in \mathbb{Z}$

$$0 = f(k) = \frac{1}{2\pi}\int_{-\infty}^{\infty} \hat{f}(\omega)e^{ik\omega}\,dt = \frac{1}{2\pi}\int_{-\pi/2}^{\pi/2} \hat{f}(\omega)e^{ik\omega}\,dt$$
$$=: \left\langle \hat{f}(\omega), e^{ik\omega} \right\rangle$$

where $\langle .,. \rangle$ is a scalar product in $L^2([-\pi/2, \pi/2])$. Since the set $\{e^{ik\omega}\}_{-\infty}^{\infty}$ forms a Hilbert basis for $L^2([-\pi/2, \pi/2])$, it follows that $\hat{f}(\omega) \equiv 0$, so $f(t) \equiv 0$, which proves the sampling theorem. □

It is also possible (at least in the totally disturbance free theory the present work lives in) to perform continuous time identification by considering the output in one point, together with sufficiently many derivatives in that point. This leads to computations similar to identification of discrete time systems.

No Bound on McMillan Degree Known

We now take up a main theme of this thesis, namely when no bound on the McMillan degree is known, or equivalently, when the set of plants $\mathcal{G}$ contains plants of arbitrarily high McMillan degree. The main result of this section is that any claimed stability indicator, as defined above, can mistake an unstable system for a stable. We have the following result.

THEOREM 4.8. *Let $\mathcal{G}$ be a set of plants, with no restriction on the McMillan degree or the location of the poles. Then there exists no stability indicator (f, Ω) for $\mathcal{G}$.*

For the proof we shall show how to fool a claimed stability indicator to mistake an unstable system for a stable by approximating a stable plant's output with an unstable plant. This will rely on the Stone-Weierstrass' approximation theorem, see e.g. [Simmons].

Proof. Let $y_0(t)$ be the output of a particular, stable system. This means that $p_0 := f(y(.)) \in \Omega$. Since Ω is open, there is an $\varepsilon > 0$ such that if $|p - p_0| < \varepsilon$, then $p \in \Omega$. The f_i's are distributions in $\mathcal{D}'$. It is a standard fact from distribution theory, see e.g. [Hörmander], that for $f \in \mathcal{D}'$, there are a constant C and an integer q, such that for all $\varphi \in \mathcal{D}$

$$|f(\varphi)| \leq C \sum_{i=0}^{q} \sup |\varphi^{(i)}(t)|$$

In our setting, this means that there are a constant $\eta > 0$ and an integer q, such that for all $y \in \mathcal{Y}$ satisfying

$$|y^{(i)}(t) - y_0^{(i)}(t)| < \eta; \qquad t \in [0,1], \qquad \text{for } i = 0, \ldots, q \qquad (@)$$

it holds that $|f(y) - f(y_0)| < \varepsilon$, and by above, $f(y) \in \Omega$. The last statement is by definition to say that y is considered to be the output of a stable system. To complete the proof we will show how to approximate any function $g \in \mathcal{C}^\infty([0,1])$ in the sense of (@) by the output of an unstable system. First we prove the following simple lemma:

LEMMA 4.9. *For $k \in \mathbb{N}$ let $\varphi, \psi \in \mathcal{C}^k([0,1])$, and assume that for some $\alpha > 0$, it holds that*

$$|\varphi^{(k)}(t) - \psi^{(k)}(t)| < \alpha, \qquad t \in [0,1]$$

Then

$$|\varphi^{(i)}(t) - \psi^{(i)}(t)| < \alpha \frac{t^{k-i}}{(k-i)!}, \qquad t \in [0,1]$$

for $i = 0, \ldots, k$.

Proof. Integrate and use the triangular inequality for integrals. ∎

By the lemma, it is enough to show (@) for $i = q$. For this, consider the set of 'outputs' $\mathcal{Y}'$ consisting of linear combinations of polynomials and exponentials of the type e^{kt}, with k non-negative integer. Every function in this set can be achieved as the output of a plant with poles only in the non-negative integers, i.e. an unstable plant. This set is in fact a subalgebra of the algebra $\mathcal{C}([0,1])$. Since it contains the constant function and separates points, by the Stone-Weierstrass' theorem its closure is the full $\mathcal{C}([0,1])$. Note that it is also closed under integration and differentiation. This shows (@) and completes the proof. ∎

For the discrete time case, the non-existence of a stability indicator is obvious.

Remark 4. If the measurements only consist of the values of the output and its derivatives in certain points, we can always fit an interpolation polynomial exactly to these measurements. So, for this case, the proof is trivial. □

4.4 Continuous Versus Discontinuous Controllers

The purpose of this section is to show that the set of discontinuous switching function controllers (SFC) is no more powerful than the set of smooth controllers. Smoothness has often been required of stabilizing controllers. We

show that every globally stabilizing switching function adaptive controller can be made continuous without weakening its stabilizing power. The basic idea is to smooth out the discontinuities by convolving with a sequence of C^∞-functions approaching a delta function. The following result holds.

THEOREM 4.10. *Let f be an L^2-compatible function, and let K be a switching function controller of the form (SFC), f-stabilizing the set of plants $\mathcal{G}$. Assume that K has a realization as*

$$\begin{aligned} \dot{z} &= F_{s(k)}z + G_{s(k)}y, \qquad z \in \mathbb{R}^l \\ u &= H_{s(k)}z + K_{s(k)}y \\ \dot{k} &= f(y,u,k,t) \end{aligned}$$

for some switching function s. We shall also use the corresponding input-output notation $u = K(p,k)y$. If the differences between consecutive switching points $\tau_{i+1} - \tau_i > \delta$ for some $\delta > 0$ and all $i \in \mathbb{Z}$, then there is another controller $\tilde{K}$, which also f-stabilizes $\mathcal{G}$, given as

$$\begin{aligned} \dot{z} &= \tilde{F}(k)z + \tilde{G}(k)y, \qquad z \in \mathbb{R}^l \\ u &= \tilde{H}(k)z + \tilde{K}(k)y \\ \dot{k} &= f(y,u,k,t) \end{aligned}$$

where $\tilde{F}(k)$, $\tilde{G}(k)$, $\tilde{H}(k)$, and $\tilde{K}(k)$ are C^∞-functions of k.

Proof. For any plant $G \in \mathcal{G}$ there exists infinitely many disjoint intervals $\{I_\nu\}$, whose lengths are bounded from below by δ, such that the controller $K(p,k)$ stabilizes G for fixed k in I_ν, for some ν.

Let φ be a C^∞-function with support contained in $[-1,1]$, satisfying

$$\int_{-\infty}^{\infty} \varphi(t)\,dt = 1$$

For $\varepsilon > 0$ denote $\varphi_\varepsilon(t) := \frac{1}{\varepsilon}\varphi\left(\frac{t}{\varepsilon}\right)$. Define $F_\varepsilon(k)$ by

$$F_\varepsilon(k) := (F * \varphi_\varepsilon)(k) = \int_{-\infty}^{\infty} F(k-t)\varphi_\varepsilon(t)\,dt$$

In the language of distribution theory, $\{\varphi_\varepsilon\}$ is a δ-generating sequence, and $\varphi_\varepsilon \to \delta$ as $\varepsilon \to 0$ in $\mathcal{E}'$. It holds that $F_\varepsilon \to F$ in $\mathcal{D}'$, and also point-wise (but of course not uniformly). If $[k-\varepsilon, k+\varepsilon]$ contains no discontinuity point of $F(k)$, then $F_\varepsilon(k) = F(k)$. For G, H, and K, the analogous notation is used, and of course the analogous results hold.

First assume that we know a number δ_0 so that $\delta \geq \delta_0$. By putting $\varepsilon := \delta_0/3$, the previous proof of Theorem 3.18 holds.

This is not possible if a bound from below on δ is not known, so we will instead patch pieces together, so that the patched function satisfies the requirements for arbitrarily small δ. There is a sequence $\{\kappa_i\}$ and an $\alpha > 0$ such that for $i = 1, 2, \ldots$, the function s is constant on $[\kappa_i - \alpha, \kappa_i + \alpha]$ and switches exactly once on $[\kappa_i, \kappa_{i+1}]$. Let $\{\varepsilon_i\}_{i=1}^{\infty}$ be a sequence satisfying $\lim_{i\to\infty} \varepsilon_i = 0$. Define $\tilde{F}(k)$ by

$$\tilde{F}(k) = F_{\varepsilon_i}(k), \qquad \kappa_i \leq k < \kappa_{i+1}$$

for $i = 1, \ldots$, and analogously for G, H, and K. For large k, these are well-defined, C^∞-functions for which the argument above applies. The proof is complete. ∎

Remark 1. The requirement that the distance between consecutive switching points is assumed to be bounded from below is just a fairly harmless technicality: From the proof of Theorem 3.18 it was obvious that the switching sequence should normally be taken to increase very rapidly, cf. the sequence on page 43. □

4.5 Different Parameter Updating Laws

The adaptive controllers in this thesis are all of the type

$$\begin{aligned} u(t) &= K(p,k)y(t) \\ \dot{k} &= f(y,u,k,t), \qquad k \in \mathbb{R} \end{aligned}$$

where $K(p,k)$ for fixed value of the parameter k is a linear time-invariant controller. Usually we have required f to be L^2-compatible. In this section we will discuss further on the choice of f.

In previous work on universal controllers, as described in the references in Chapter 1, the parameter updating law $\dot{k} = f(y,u,k,t) = \|y\|^2$ has been used. This is not an L^2-compatible function. In the present work, the favorite f is instead $f(y,u,k,t) = \|y\|^2 + \|u\|^2$, which is L^2-compatible. As was shown in Section 3.3, Corollary 3.4 is not true without the u-term (unless the plant G possesses a proper left inverse). That corollary plays a crucial part in many of the proofs in the thesis. The importance of the u-term is not just a technicality, as is shown by the next section.

Non-Minimum Phase Plants

We consider the adaptive stabilization of a set of single-input, single-output plants, all of which have a certain, known degree and relative degree. The set also contains non-minimum phase plants.

PROPOSITION 4.11. *Let n and r be given integers, satisfying $1 \leq r < n$. Also, let $\mathcal{G}$ be the set of single-input, single-output plants of degree n and relative degree r. For $l = 0, 1, \ldots$, there is no controller of the type*

$$y(t) = K(p,k)u(t)$$
$$\dot{k} = f(y)$$

where f is a continuous function, satisfying $f(0) = 0$, which is stabilizing for $\mathcal{G}$.

Remark 1. Note that, with the definitions in Chapter 2, the condition $f(0) = 0$ is required for convergence of the stabilization problem.

Proof. If $l < n - 1$ no time-invariant, linear controller exists, so by Theorem 4.1, there is nothing to prove. Therefore, assume that $l \geq n - 1$.

Assume that $(K(p,k), f)$ is a stabilizing controller of the requested type. We will show that this leads to a contradiction. For this, first it will be investigated what will happen when the controller successfully stabilizes a certain plant g_0. Then, dependent on the outcome of that stabilization, we demonstrate how another plant $g_1 \in \mathcal{G}$, together with initial conditions for g_1 and for the controller, can be selected so that the controller will fail.

It is shown in [Ghosh] that for all l, there are plants in $\mathcal{G}$ for which all stabilizing controllers of order l are unstable. Let g_0 be one of these. Select a particular initial condition for g_0. Since (K, f) by assumption stabilizes g_0, it follows that $\lim_{t\to\infty} k = k_\infty < \infty$. By the construction, $K(p, k_\infty)$ has an unstable pole $s_0 \in \mathbb{C}^+$. Either s_0 is real, or there is another unstable pole $s_1 = \overline{s_0}$. There is another plant $g_1 \in \mathcal{G}$ such that $g_1(s_0) = 0$. There is also an initial condition $x_0 \neq 0$ for g_1, such that $y(t) \equiv 0$ if $x(0) = x_0$, and $u(t)$ is either $e^{s_0 t}$, for the case of s_0 being real, or $e^{s_0 t} + e^{s_1 t} \in \mathbb{R}$ otherwise. Thus, there exists an initial condition $(k_0 = k_\infty, z_0, x_0)$ for the total system such that $y(t) \equiv 0$, $u(t) \to \infty$, and $k \equiv k_\infty$. So (K, f) does not stabilize g_1, which completes the proof. ∎

Remark 2. Note that it is required for the counter-example that we have dynamics in the compensator. If y is replaced by the augmented $\tilde{y}$ in the spirit of Chapter 3, the proof is not valid. Also, the non-minimum phase property was crucial. □

The results in Section 3.3 were formulated for u being an arbitrary time function. If u instead is a control signal generated by feedback, the requirement on f to be L^2-compatible can be relaxed. For example, in the static feedback case, eventually gotten by augmenting the plant, clearly the function $f = \left(1 + \|K\|^2\right) \|y\|^2$ will do.

4.6 Continuous Time Versus Discrete Time

The treatment of continuous time problems versus discrete time problems differs very much between different schools of control theory. Often, the emphasis is entirely on continuous time systems, especially in the more theoretically advanced linear system theory, and geometric non-linear system theory. The effects of implementing the proposed control algorithm in a digital computer with a non-zero sample rate is defered to 'implementation aspects'. In other traditions, e.g. in identification and some schools of adaptive control and stochastic control theory, essentially only discrete time systems are dealt with. Some authors try to treat the different problems in parallel.

In this work, we have taken the standpoint of considering continuous time system as the primary object of study. We try to state as many true statements as possible for discrete time systems, but for brevity, the exact formulation and proof is often left out, whenever it is conceptually analogous to a continuous time result. However, we believe that continuous and discrete time systems are, whether considered as mathematical objects or as descriptions of real-life entities, fundamentally different. The apparent similarities exist because of *algebraic similarities* in the analysis of the systems (MIMOC) and (MIMOD). These similarities do not reflect a deeper relationship.

A 'Metatheorem' on Control Theory

We formulate the following, slightly soft, 'Metatheorem on Control Theory'.

'METATHEOREM' 4.12. *To a theorem on continuous time systems there is an analogous theorem on discrete time systems (and vice versa), if and only if the theorem states an algebraic property, and has an algebraic proof.*

Since we have not defined the concepts 'algebraic property', and 'algebraic proof'—actually, contemporary mathematics does not have a generally accepted definition either—the 'Metatheorem' can be considered as either unprovable or obvious, depending on the readers philosophical standpoint. We shall not deal any further with these matters. However, we shall give some example of the 'Metatheorem'.

⋆ All results on pole-placement are equally valid for continuous and discrete time plants.

- ⋆ Root-locus statements carry over.
- ⋆ For strictly proper discrete time plants high-gain stabilization is impossible, since at least one branch of the root locus approaches infinity, and the stability region is bounded.
- ⋆ The high-gain concepts, such as almost (A, B)-invariant subspaces, make no sense in discrete time since the trajectories are disconnected.

Sampling of Continuous Time Systems

Another aspect in which continuous and discrete time systems behave fundamentally different, is in the meaning of the relative degree r. For continuous time systems, this is the number of vanishing derivatives of the step response at $t = 0$ (starting with the zero'th). For a discrete time system, this is instead the number of delays from the input to the output, or equivalently, the number of leading zeros in the step response.

Control of a continuous time plant with piecewise constant inputs of length $h > 0$, and observing the output of the plant only (immediately before) the change of the input gives rise to a discrete time plant. This we will, by a slight abuse of notation, call *sampling of the plant.* A controller of this type we will call a *sampled controller.* Denoting the continuous time transfer function by $G(s)$ and the discrete time transfer function by $H(z)$, sampling of the plant can mathematically be described as

$$H(z) = (1 - z^{-1})\mathcal{Z}\mathcal{L}^{-1}\frac{G(s)}{s}$$

where $\mathcal{Z}$ is the z-transform. See e.g. [Åström-Wittenmark]. From above, it is obvious that sampling of any continuous plant will give rise to a discrete time plant of relative degree one, irrespective of the relative degree r of the original plant (except possibly for isolated values of the sample rate). It was shown in [Åström-Hagander-Sternby] that for $r \geq 3$ the sampled plant always has zeros outside the unit disc for sufficiently small sample intervals h. This prohibits the common class of adaptive controllers based on cancellation of plant zeros to operate at fast sample frequencies. Further treatment is given in the references above and in [Mårtensson 1982].

The limitations imposed by this phenomena shall not be over-emphasized. When $h \to 0+$ the zeros converge, eventually outside the unit disc. That is, the plant exhibits a non-minimum phase behavior, which puts limitations on the achievable performance. But notice that this "performance" is measured in the time-scale of sample steps. By letting the sample interval approach zero, in real time these limitations also approach zero, at least theoretically.

Adaptive Stabilization by Sampled Control

We will next consider implementation of an adaptive controller, aimed at stabilization of a continuous time plant, on a digital computer. Unfortunately, the result is negative.

It is shown in introductory textbooks on sampled control that controllability and/or observability may be lost for isolated sample intervals. To assign a reasonable meaning to the problem above, we have to prohibit loss of controllability or observability for unstable modes.

Definition 4.13. Consider a sampled controller with sample interval h. We shall say that this controller stabilizes the plant G if

(i) Considered as a discrete time problem, the discrete time controller stabilizes the sampled plant.

(ii) No unstable modes or G are made uncontrollable or unobservable by sampling with sample interval h.

□

Only the single-input, single-output case will be discussed. The multivariable case only differs in notation. Since every subdeterminant of the controllability matrix is an analytic function in h, not identically zero, controllability is lost only for isolated sample intervals, and analogously for observability. Also, controllability and observability is preserved for the generic plant and sample interval. It follows from the results in [Bar-Ness, Langholz] that, for n the McMillan degree of the plant, the set of such sample intervals can have at most dimension $\lfloor n/2 \rfloor$ over $\mathbb{Q}$. By Section 4.3, the same statement also holds for observability, since this can be determined with zero input. Also, it is easy to construct an example that reaches this limit: Given $k := \lfloor n/2 \rfloor$ different positive sample rates $\{h_1, \ldots, h_k\}$, there is a plant of order n such that the sampling operation will make an unstable mode uncontrollable (or unobservable) for each $h = h_1, \ldots, h_k$. We summarize the results in the following proposition.

PROPOSITION 4.14. *Let $\mathcal{G}$ be the set of continuous time single-input, single-output plants of order $\leq n^*$. (We allow $n^* = \infty$.) Then, for a fixed value of the sample interval h, the generic plant $g \in \mathcal{G}$ is stabilizable. Further, there are plants in $\mathcal{G}$, not stabilizable under this sample interval. Let $k \geq \lfloor n^*/2 \rfloor$ and let $h_1, \ldots, h_k$ be any collection of non-negative real numbers linearly independent over $\mathbb{Q}$. Then, for any plants $g \in \mathcal{G}$ there is a sample interval $h_i \in \{h_1, \ldots, h_k\}$ such that g is stabilizable. No set of lower cardinality will suffice. In particular, no finite set will do if $n^* = \infty$.*

Remark 1. If a priori knowledge of the magnitude of the fastest unstable pole is known, the argument above does not hold, and adaptive stabilization is possible if the sample rate is fast enough. Every practitioner assures that this a priori knowledge is always present in practice. □

4.7 Integrators in the Loop

Several problems related to the tracking of different reference signals has been posed in Chapter 2. Unfortunately, we do not give many answers in this thesis. However, in this section it will be shown how to include integrators in the loop, thereby being able to track a constant reference signal with error approaching zero asymptotically.

Tracking with Zero Error Asymptotically

Every engineer knows that you cannot track a constant reference signal with zero error asymptotically without having integrators in the loop*. The analogous statement of course applies to multivariable plants. Conversely, with integrators in every loop, the asymptotic tracking error is zero, provided the closed loop system is stable. This shall mean that every fixed linear combination of rows or columns of the matrix $G(s)$ has a pole at the origin.

The construction for adaptively stabilizing a plant, with a constant reference signal $r(t) \equiv r_0$ is very simple: We just put the diagonal 'precompensator' $\bar{K} = s^{-1}I_m$ in front of the plant. For the sequel, consider the problem of adaptively stabilizing the 'plant' $G(s)\bar{K}(s)$ instead.

Extensions and Comments

Everyone with experience of practical control engineering knows that plants with high relative degree are very hard to control manually, but often fairly simple to control with simple controllers, such as standard PID-controllers. As is shown in this thesis, something similar is true about adaptive control. We need some extra dynamics in our controllers, that is all. By preceding the plant by integrators as in the construction above, the minimal order of a stabilizing controller might increase. A classical control engineer would say that we do this at the expense of a decrease of the phase by 90°, and thus need some extra phase advancing to stabilize the plant.

The same argument may be used to introduce multiple integrators in the loop, thus being able to track ramps of higher order. Also note that everything carries over to discrete time.

4.8 Conclusions

In this chapter several results on adaptive stabilization have been formulated, without going into particular algorithms. Necessary and sufficient a priori information for adaptive stabilization has been characterized. The problem of

---

* Quick and *dirty* proof: $y(\infty) = r(\infty) \Longleftrightarrow g(0)/(1+g(0)) = 1 \Longleftrightarrow g(0) = \infty$ ■

determining the minimal order of a stabilizing controller has been discussed. We have introduced the idea of adaptive stabilization by stability indicators, and showed that this is possible if and only if a bound on the McMillan degree is known. As a by-product, a proof of Shannon's sampling theorem was achieved. This proof is believed to be new. Then we showed that the set of continuous controllers is just as powerful as the set of switching function controllers. Different 'parameter-cranking' laws $\dot{k} = f(y, u, k, t)$ were discussed, and a reasonable adaptive control problem was given where the previously used updating law $\dot{k} = \|y\|^2$ was shown not to work. We discussed the similarities and the differences between continuous time and discrete time control theory problems. A 'metatheorem' was given. Sampling was discussed, and a negative result on stabilization by sampled, adaptive controllers was presented. The last section showed that it is straight-forward to augment the loop with integrators in the standard engineering way.

5

The Turing Machine of Universal Controllers

5.1 Introduction

This chapter is devoted to the construction of a universal controller, stabilizing any plant stabilizable by a fixed controller of the same dimension as the linear constituent of the adaptive controller. We will call this a *Turing Machine Controller* since it resembles a Turing machine in several important respects.

The Turing machine was suggested by Alan Turing in 1936, [Turing 1936], as a model of formalized computation. It is claimed that *what can be effectively computed can be computed by a Turing machine.* This claim is based on the following assumptions:

(i) It is no restriction to assume sequential computation, i.e. instead of paper/blackboard etc. we can use an infinite, one-dimensional tape.

(ii) It is no restriction to assume an alphabet consisting of only the symbols "0" and "1".

(iii) Any algorithm used for computing can be completely described in a finite number of words.

A Turing machine consists of a tape head moving along an infinite tape, capable of writing "0" and "1" on the tape, erasing, and moving back and

forth along the tape. Its behavior is governed by a control mechanism, which consists of a finite state machine.

Accepting (i) – (iii) above, it follows that the Turing machine has the highest computational power possible. Note the following properties, which motivates why we are making the analogy with the controller presented in this chapter and a Turing machine.

(i) A Turing machine is conceptually very simple, despite the fact that it has the greatest computational power a machine can have.

(ii) It is a very 'theoretical' contribution in the sense that no one would ever dream about constructing a practical computational tool according to these principles.

(iii) Its value is instead on the theoretical level, as an abstraction and a theoretical model, used to analyze questions of the type *what can be computed and what cannot be computed.* For example, note that there is no way to compute with real numbers, since these are uncountable.

(iv) There is no way of building a Turing machine in the real world. Assuming a fixed information density on the tape, it would require an infinite amount of material to realize the infinite tape.

All these concepts carry over to the adaptive stabilizing algorithm presented in this chapter. The algorithm is simple, and because of the negative part of Theorem 4.1, it has the greatest 'stabilizing power' a smooth adaptive controller can have. It is absolutely useless for every practical purpose, and should be considered as a form of existence proof. There is no way of realizing it in the real world, since both the plant and the controller are supposed to have *vector spaces* as their state spaces, not a bounded subset of a vector space (or some more general manifold). This is crucial in the proof.

In the next section, we construct the adaptive stabilizer with the claimed properties, and prove its convergence. The section is based on [Mårtensson 1985ab], which has been extensively rewritten and extended. Some easy modifications of the basic scheme are given in section 5.3. The following section shows how to search over the dimension of the linear constituent of the controller, when no regulator order is known a priori. The fairly cryptical comments on this subject in [Mårtensson 1985ab] have been totally rewritten.

5.2 The 'Turing Machine' Controller

In this section we will consider the problem of adaptively stabilizing the plant (MIMOC) or (MIMOD), given only the a priori information that an integer l is known, such that there exists a fixed linear time-invariant controller of order l that will stabilize the system. An explicit algorithm for this will be given.

Description of the Controller

As shown in Section 3.2, it suffices to consider adaptive control based on static feedback. A (fixed) controller is then nothing but a matrix in $\mathbb{R}^{M\times P}$, where M and P denotes the number of inputs and outputs to the augmented plant (MIMOCA) or (MIMODA). Since a (fixed) controller achieving internal stability to the closed loop system places all the eigenvalues in the open left-half plane, (or the open unit disc) and these depend continuously on the parameters of the controller, there is an open set in parameter space yielding a stable system. Equip $\mathbb{R}^{M\times P}$ with the norm

$$\|A\|^2 = \sum_{i,j}(A)_{ij}^2$$

Thus we identify $\mathbb{R}^{M\times P}$, as a normed space, with $\mathbb{R}^{MP}$, equipped with the Euclidean norm. For the sequel, we let $\|\,.\,\|$ denote the this vector norm, or the corresponding induced matrix norm. Partition $\mathbb{R}^{M\times P} = \mathbb{R}^+ \times S^{MP-1}$ in a natural way, namely by dividing out the norm of every non-zero matrix. S^{MP-1} is now the unit sphere in a normed space of controllers. Let the controller be

$$\tilde{u} = g(h(k))N(h(k))\tilde{y} \tag{1}$$

$$\dot{k} = \|\tilde{y}\|^2 + \|\tilde{u}\|^2 \tag{2C}$$

or

$$k(t+1) = k(t) + \|\tilde{y}\|^2 + \|\tilde{u}\|^2 \tag{2D}$$

where

$$N(h) \text{ is 'almost periodic' and dense on } S^{MP-1} \tag{3}$$

while h and g are continuous, scalar functions satisfying

$$h(k) \nearrow \infty, \qquad k \to \infty \tag{4}$$

$$\text{There exists an } a \text{ such that } \left|\frac{dg}{dh}\right| < a \tag{5}$$

$$g\big(\{\alpha\nu + (\beta,\gamma)\}_{\nu=n}^{\infty}\big) = \mathbb{R}^+ \quad \text{for } n \in \mathbb{Z}, \quad \alpha \neq 0, \quad \gamma > \beta \tag{6}$$

$$kg\big(h(k)\big)\frac{dh}{dk} \to 0, \qquad k \to \infty \tag{7}$$

These different requirements will be motivated in a moment. Recall that a function f of a real variable is called *(uniformly) almost periodic* if it is continuous and for all $\varepsilon > 0$ there is a $T > 0$ such that all intervals of length T contain a τ such that $\|f(t+\tau) - f(t)\| < \varepsilon$ for all $t \in \mathbb{R}$. Properties of almost periodic functions can be found in e.g. [Hale].

It will be shown that this controller actually does the job of stabilizing the plant. We formulate this in the main theorem of this chapter.

THEOREM 5.1. *Consider the minimal plant* (MIMOC) *or* (MIMOD). *Assume that l is chosen so that there exists a fixed linear stabilizing controller, and that the augmentation to the form* (MIMOCA) *or* (MIMODA) *has beed done. The controller (1) – (2), subject to (3) – (7), will then stabilize the system in the sense that*

$$\big(x(t), z(t), k(t)\big) \to (0, 0, k_\infty) \qquad \text{as } t \to \infty$$

where $k_\infty < \infty$.

Before giving the full proof, we will in more informal terms discuss the controller.

Heuristic Description of the Controller

Equation (1) decomposes the controller in a 'magnitude', g, and a 'direction', N. Since the plant might be tacky about the 'regulator direction', we let the curve $\{N(h)\}$ be dense, (3). We also want the total controller $g(h)N(h)$ to be dense in the controller space. This is ensured by the requirement (6), which informally can be formulated as *the image under g of any sequence of equidistant open intervals of the same length is all of* $\mathbb{R}^+$. This means that $\overline{\lim}_{h\to\infty} g = \infty$ and that, loosely speaking, g 'lacks all kind of periodicity'. Since $N(h)$ is almost periodic, $g(h)N(h)$ will therefore be dense. Because of the bound of the derivative of g, (5), $g(h)N(h)$ will have a bounded derivative. So, for all plants where the assumption of existence of a stabilizing controller of order l holds, there will be infinitely many open intervals of length bounded from below, on which the frozen parameter controller will yield a system with some prescribed margin of stability.

Note that k enters in the controller only in the form of $h(k)$, where h is a function that increases to infinity, (4), but fairly slowly, (7). See also the explicit example given below. This is to account for 'slow adaptation'.

The parameter updating law (2) differs from the previous used, in that it also uses the norm of $\tilde{u}$ instead of just the norm of y. This is so because we want to be able to estimate the norm of the state by k, by using Lemma 3.1, (or 3.2) so we have to use an L^2-compatible function for updating k. This has been discussed in Chapters 3 and 4.

Explicit Construction

One set of functions satisfying (4) – (7) is

$$h(k) = \sqrt{\log k}, \qquad k \geq 1$$
$$g(h) = \sqrt{h}\left(\sin\sqrt{h} + 1\right)$$

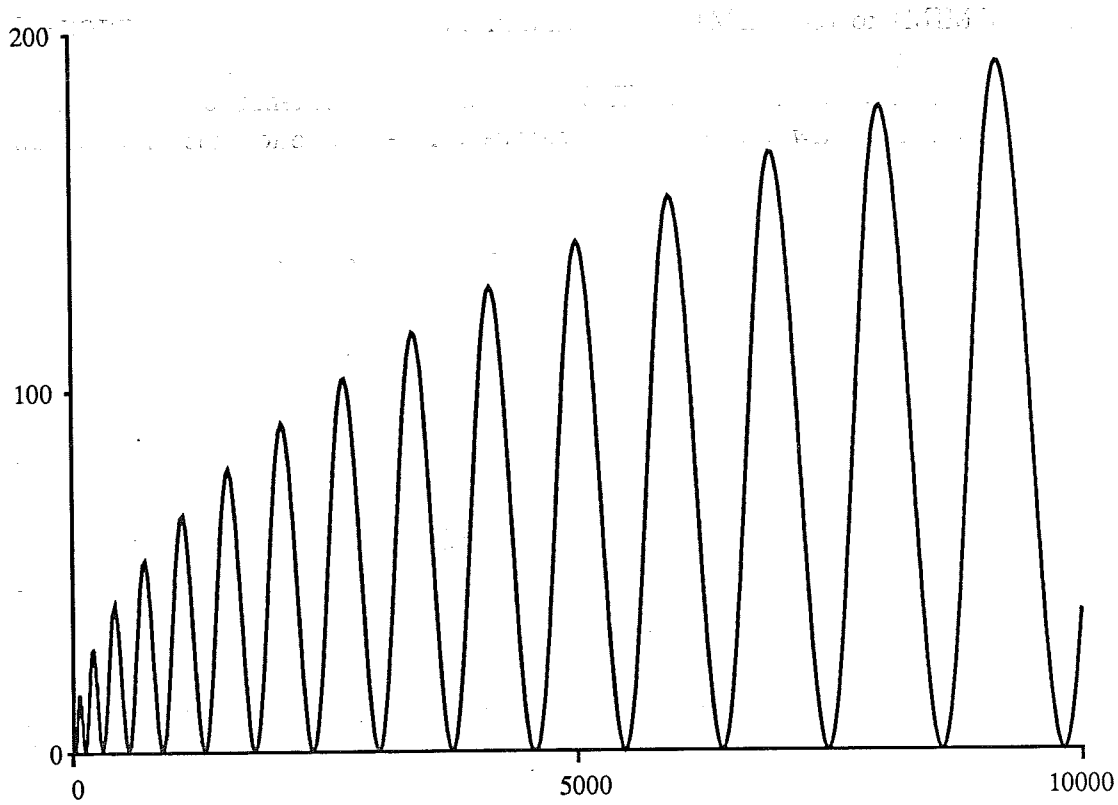

Figure 5.1. Graph of $g(h) = \sqrt{h}\left(\sin\sqrt{h} + 1\right)$

Remark 1. Note that h is an extremely slowly growing function—its inverse is e^{h^2}—which intuitively corresponds to the concept of 'slow adaptation'. It is also illuminating to look at the graph of g, shown in Figure 5.1. Note that it 'oscillates with a lower and lower frequency', thus being able to fulfill $\underline{\lim}_{h\to\infty} g = 0, \overline{\lim}_{h\to\infty} g = \infty$, while the derivative is bounded, and the 'anti-periodicity requirement (6) satisfied. The properties (5) and (6) are very plausible just from a look at the graph. □

For $MP > 1$, a curve $N(h)$ on S^{MP-1}, satisfying (3) can be realized e.g. by the following procedure: First we introduce coordinates on S^{MP-1}, with a variety of lower dimension removed. We use the spherical coordinates on S^{MP-1}:

$$\begin{aligned} x_1 &= \sin\theta_{MP-1}\ldots\sin\theta_2\sin\theta_1 \\ x_2 &= \sin\theta_{MP-1}\ldots\sin\theta_2\cos\theta_1 \\ &\ldots\ldots\ldots\ldots\ldots \\ &\ldots\ldots\ldots\ldots\ldots \\ x_{MP-1} &= \sin\theta_{MP-1}\cos\theta_{MP-2} \\ x_{MP} &= \cos\theta_{MP-1} \end{aligned} \qquad (\flat)$$

where

$$(\theta_1, \ldots, \theta_{MP-1}) \in (0, 2\pi) \times (0, \pi)^{MP-2} =: \Lambda^{MP-1}$$

This is a bijection from Λ^{MP-1} to a open, dense subset of S^{MP-1}. We will also consider ($\flat$) as defining a mapping from $\mathbb{R}^{MP-1}$ to S^{MP-1}. In order to satisfy (3) put

$$\theta_i = a_i h \qquad i = 1, \ldots, MP-1$$

where $\{a_1, \ldots, a_{MP-1}\}$ are linearly independent over the rational numbers. We claim that the curve $N(h)$ is analogous to the skew line on the torus, hence it is dense and almost periodic.

The skew line on the torus can be described as the mapping $f : \mathbb{R} \longrightarrow \mathbb{T}$ given by $f_a(t) = (t \bmod 2\pi, at \bmod 2\pi)$. It is well-known, see e.g. [Brickell-Clarke], that $\operatorname{im} f$ is a dense subset of $\mathbb{T}$ if (and only if) a is irrational. It is easily seen that f is almost periodic. The same arguments show that the higher-dimensional generalization $f : \mathbb{R} \longrightarrow \mathbb{T}^n$, given by $f_a(t) = (a_1 t \bmod 2\pi, \ldots, a_n t \bmod 2\pi)$ has the same properties if $a_1, \ldots, a_n$ is linearly independent over $\mathbb{Q}$.

Explicitly, by considering the θ_i's modulo 2π, ($\flat$) constitutes an 2^{MP-2}-fold covering from the torus $\mathbb{T}^{MP-1}$ to a dense subset of the sphere S^{MP-1}. This shows the claim.

For $M = P = 1$, this construction does not carry over, since $S^0 = \{-1, 1\}$ is not connected. Instead we may take $N(h)$ any periodic or almost periodic function taking on only the values ± 1, e.g. $N(h) = \operatorname{sign} \sin h$. With this approach, the controller will not be continuous, however. This will be commented upon in the next section.

Proofs

We will prove the theorem both for the continuous and discrete time case. The proofs will to a large extent be similar. Therefore, the discrete time proof will be given more sketchy. However, the latter proof can be found in full detail in [Mårtensson 1985b].

The main steps in the proof are the following: First, by Corollary 3.4, it suffices to show that k stays bounded. Lemma 3.1 yields an estimate of $\|\tilde{x}\|^2$, i.e. a measure for 'how much wrong does it go when it goes wrong'. According to the above, it happens infinitely often that the frozen parameter system will be stable. Finally, we show that (7) implies that the parameter k finally will get stuck in one such stable interval. For the discrete time case, it also has to be shown that the change in the controller per unit of time goes to zero, in order to eventually hit one such 'stable interval'.

Proof. We first give the proof for the continuous time version.

It is enough to show that k converges to a finite limit k_∞. For, if this is so, and since $f(y, u, k, t) := \|y\|^2 + \|u\|^2$ is an L^2-compatible function, it follows from Corollary 3.4 applied to the plant (MIMOCA), that $x(t)$ and $z(t) \to 0$, as $t \to \infty$. For the proof we may thus assume that $k \nearrow \infty$.

By (2C) and part (i) of Lemma 3.1, there exist constants c_0 and c_1 such that

$$\|\tilde{x}\|^2 \leq c_0 + c_1 k \tag{$\diamondsuit$}$$

Next we show that for all $a \in \mathbb{R}$ the set $\{g(h)N(h),\ h = h(k),\ k > a\}$ is a dense subset of the space of $M \times P$ matrices. For this, let $\varepsilon > 0$ and $M \in \mathbb{R}^{M \times P}$ be given. We shall find a h such that $\|g(h)N(h) - M\| < \varepsilon$. A short calculation shows that this will be the case if

$$\left\| N(h) - \frac{M}{\|M\|} \right\| < \frac{\varepsilon}{2\|M\|} \tag{$\heartsuit$}$$

$$|g(h) - \|M\|| < \frac{\varepsilon}{2} \tag{$\spadesuit$}$$

Since $N(h)$ is almost periodic, there is a sequence of equidistant intervals satisfying ($\heartsuit$). Thus, (6) together with (3) is exactly what is needed to ensure the existence on infinitely many simultaneous solutions to ($\heartsuit$) and ($\spadesuit$).

By assumption, there is a $g_0 N_0$ such that the control law $\tilde{u} = g_0 N_0 \tilde{y}$ stabilizes the plant. There is also a $Q = Q^T > 0$ such that $(\tilde{A} + g_0 \tilde{B} N_0 \tilde{C})^T Q + Q(\tilde{A} + g_0 \tilde{B} N_0 \tilde{C}) = -I$. By continuity, the left hand side will be less than $-\frac{1}{2}I$ for gN in some neighborhood of $g_0 N_0$. That is, $\frac{d}{dt} x^T Q x < -\frac{1}{2}\|x\|^2$ in this neighborhood. From (3) and (5) it follows that the controller matrix curve is traversed with a bounded velocity in the parameter h. We deduce that there exists infinitely many disjoint open intervals $I_\nu = (\alpha_\nu, \beta_\nu)$, $\nu = 1, 2, \ldots$; and a constant $\delta > 0$ such that $\beta_\nu - \alpha_\nu > \delta$ for $\nu = 1, 2, \ldots$; and the inequality $\left(\tilde{A} + g(h)\tilde{B}N(h)\tilde{C}\right)^T Q + Q\left(\tilde{A} + g(h)\tilde{B}N(h)\tilde{C}\right) < -\frac{1}{2}I$ holds for all h in these intervals. We may also assume that g is bounded from below on these intervals. For an unstable plant, this is unquestionably true, and for the slightly trivial case of 'stabilization of a stable system', the definition of $\{I_\nu\}$ can be suitably altered.

We now analyze what happens when $h \in I_\nu$ for some ν. Suppose that h enters I_ν when $t = t_0$. By above, $\tilde{x}^T Q \tilde{x}$ will then be a Lyapunov function, and $\|\tilde{x}(t)\| \leq c_0 e^{-c_1(t-t_0)} \|\tilde{x}(t_0)\|$ for some $c_0, c_1 > 0$ and $t \geq t_0$. This, together with (1), means that there exists a constant d such that

$$\int_{t_0}^{\infty} (\|\tilde{y}\|^2 + \|\tilde{u}\|^2)\,dt \leq \left(1 + \sup_{h \in I_\nu} g\right) \int_{t_0}^{\infty} \|\tilde{y}\|^2 dt \leq d\left(1 + \sup_{h \in I_\nu} g\right) \|\tilde{x}(t_0)\|^2$$

provided that h stays within I_ν, for some ν, for all $t \geq t_0$. In particular, the left hand side exists finite, and the theorem will be proved.

Finally we prove that h will get stuck in some I_ν: Let $I_{\nu'} = (h(t_0), h(t_0) + \delta)$

$\subset I_\nu$. While $h \in I_{\nu'}$ h can increase by at most

$$\sup_{h\in I_{\nu'}} \left(\frac{dh}{dk}\right) \int_{h\in I_{\nu'}} (\|\tilde{y}\|^2 + \|\tilde{u}\|^2)dt \leq d \sup_{h\in I_{\nu'}} \left(\frac{dh}{dk}\right) \left(1 + \sup_{h\in I_{\nu'}} g\right) \|\tilde{x}(t_0)\|^2$$
$$\leq d \sup_{h\in I_{\nu'}} \left\{ \left(\frac{dh}{dk}\right) (1 + g + a\delta)\,(c_0 + c_1 k) \right\}$$

where the last quantity uses the notation in (5) and ($\diamond$). Since g is bounded from below on $\{I_\nu\}$, it follows from (7) that all terms of the rightmost part approaches 0 as k approaches infinity. We conclude that for k sufficiently large, the left hand side is less than δ. Thus there is a ν such that h will never leave I_ν. This proves the theorem for the continuous time case.

In the proof of the discrete time version, the first two paragraphs are entirely similar. In the third, the quantity $(\tilde{A}+g_0\tilde{B}N_0\tilde{C})^TQ+Q(\tilde{A}+g_0\tilde{B}N_0\tilde{C})$, associated with the quadratic form $\frac{d}{dt}x^TQx$, should be replaced by $(\tilde{A}+g_0\tilde{B}N_0\tilde{C})^TQ$ $(\tilde{A}+g_0\tilde{B}N_0\tilde{C})-Q$, indicating $x(t+1)^TQx(t+1)-x(t)^TQx(t)$.

To be able to come up with the same conclusion, we have to show that $h(t+1)-h(t) \to 0$ as $t \to \infty$, in order to surely hit I_ν for ν large. We have

$$h(t+1) - h(t) \leq \sup_{k\in[k(t),k(t+1)]} \left(\frac{dh}{dk}\right) \left(\|\tilde{y}\|^2 + \|\tilde{u}\|^2\right)$$
$$\leq \sup \left(\frac{dh}{dk}\right) \left(1 + \sup_{[h(k(t)),h(k(t+1))]} g\right) \|\tilde{y}\|^2$$
$$\leq \sup \left(\frac{dh}{dk}\right) d\,(1 + \sup g)\,\|\tilde{x}\|^2$$

for some constant d. By the same kind of estimations as before, this tends to zero as k goes to infinity. Hence, there is a ν_0 such that $\{h(k(t)),\, t \in \mathbb{N}\}$ will intersect the lowest half of I_ν for $\nu > \nu_0$. The rest of the proof is exactly the same, except for a replacement of δ with $\delta/2$. The proof is finished. ∎

5.3 Modifications

In this section we will discuss some modifications of the basic algorithm presented in the previous section.

Getting Continuity in the Scalar Case

For the single-input, single-output, static feedback case, the construction in the previous section does not yield a continuous controller. We will show how to repair this cosmetic flaw in the following proposition. It shows that we can replace the discontinuous $N(h)$ by a continuous function $\hat{N}(h)$, approximating $N(h)$ better and better when h grows. Both the proposition and the proof hold equally well for both the continuous- and discrete time case. The argument will be similar to the one used in Section 4.4.

PROPOSITION 5.2. *Suppose that $N : \mathbb{R} \longrightarrow \{-1, 1\}$ is a periodic function, and that the triple (g, h, N) satisfies (3) - (7). Then there is a C^∞-function $\hat{N} : \mathbb{R} \longrightarrow [-1, 1]$, such that*

$$\frac{1}{b-a}\int_a^b \left|\hat{N}(h) - N(h)\right| dh \to 0 \quad \text{as } \min(a,b) \to \infty$$

and the controller corresponding to $(g, h, \hat{N})$ will stabilize all single-input, single-output plants stabilizable by static feedback.

Proof. Let φ be a non-negative C^∞-function with support contained in $[-1, 1]$, satisfying $\int_{-\infty}^{\infty} \varphi(t)\, dt = 1$. For $\varepsilon > 0$ denote $\varphi_\varepsilon(t) := \frac{1}{\varepsilon}\varphi(\frac{t}{\varepsilon})$. Define $N_\varepsilon(h)$ by

$$N_\varepsilon(h) := (N * \varphi_\varepsilon)(h) = \int_{-\infty}^{\infty} N(h-t)\varphi_\varepsilon(t)\, dt$$

In the language of distribution theory, $\{\varphi_\varepsilon\}$ is a δ-generating sequence, and $\varphi_\varepsilon \to \delta$ as $\varepsilon \to 0$ in $\mathcal{E}'$. It holds that $N_\varepsilon \to N$ in $\mathcal{D}'$, and also point-wise. Since $\varphi \geq 0$, $-1 \leq N_\varepsilon(h) \leq 1$, which is the only point where this requirement is needed. If $h \in [h-\varepsilon, h+\varepsilon]$, and this interval contains no discontinuity point of $N(h)$, then $\hat{N}(h) = N(h)$.

First assume that we know a bound from below δ_0 on the δ occuring in the proof. By putting $\varepsilon := \delta_0/3$, the previous proof holds with δ replaced by $\delta/3$.

This is not possible in the general case, so we will instead patch pieces together, so that the patched function will satisfy the requirements for arbitrarily small δ. Let h_0 and $\alpha > 0$ be real numbers such that $N(h)$ is constant for $h \in [h_0 - \alpha, h_0 + \alpha]$, and let $\{\varepsilon_i\}_{i=1}^{\infty}$ be a sequence satisfying $\varepsilon_i > 0$, and $\lim_{i\to\infty} \varepsilon_i = 0$. Denote the period of $N(h)$ by H, and define $\hat{N}(h)$ by

$$\hat{N}(h) = N_{\varepsilon_i}(h), \qquad iH + h_0 \leq h < (i+1)H + h_0$$

for $i = 1, 2, \ldots$ When h is sufficiently large, this is a well-defined C^∞-function for which the argument above applies. The proof is complete. ∎

Known Bound on the Gain of the Controller

It is easy to modify the controller (1) – (2) in order to prohibit high-gain control laws. More precisely, we state the following assumption.

Assumption "Bounded Required Gain". Consider the plant (MIMOCA) (or (MIMODA)). Assume that we know a $\kappa \geq 0$ such that there exists a linear, time-invariant stabilizing controller of norm less than κ. That is, in the language of Section 3.2, $\|\tilde{K}\| \leq \kappa$, for some $\tilde{K}$ yielding stability to the closed loop system. □

The modification consists of changing the gain-function g to something that will reach, but never exceed κ. More precisely, change (6) to

$$g\big(\{\alpha\nu + (\beta,\gamma)\}_{\nu=n}^{\infty}\big) = [0,\kappa] \quad \text{for } n \in \mathbb{Z}, \quad \alpha \neq 0, \quad \gamma > \beta \tag{6'}$$

A set of functions satisfying the requirements (4), (5), (6′), and (7) is

$$h(k) = \sqrt{\log k}$$
$$g(h) = \kappa\left(\sin\sqrt{h} + 1\right)$$

That is, h and N can be taken as before, and g is just slightly modified so that it cannot exceed κ. We state the result as a theorem.

THEOREM 5.3. *Consider the minimal plant* (MIMOC) *or* (MIMOD). *Suppose that "Assumption Bounded Required Gain" holds for a given κ. Assume that l is chosen so that there exists a fixed stabilizing controller, and that the augmentation to the form* (MIMOCA) *or* (MIMODA) *has beed done. The controller (1) – (2), subject to (3) – (5), (6′), and (7), will then stabilize the system in the sense that*

$$\big(x(t), z(t), k(t)\big) \to (0, 0, k_\infty) \qquad \text{as } t \to \infty$$

where $k_\infty < \infty$. Furthermore, the norm of the controller $\|\tilde{K}\| \leq \kappa$ for all t.

Proof. The last statement is obvious. For the rest, the old proof holds without change. ■

Remark 1. It was shown in Chapter 4 that the u-term might be crucial, especially for non-minimum phase plants. As in the proof of Corollary 3.4, the same proof will be valid for f any L^2-compatible function. One such candidate, lacking the explicit u-dependence, is $\dot{k} = f(\tilde{y}, \tilde{u}, k, t) = \big(1 + g(h(k))\big)\tilde{y}$. This also carries over to discrete time, with obvious modifications. □

5.4 Searching over the Dimension of the Controller

In this section we will solve the problem of how to stabilize a plant when not even the order of a stabilizing controller is known. It is tempting to try to tie in the results on switching functions in Section 3.5. Unfortunately, this is not possible, since the 'Turing Maching Controller' is not f-stabilizing even for large t.

The section will deal exclusively with continuous time plants. However, every result and every detail in the proofs translates to the discrete time case. We do not mention this explicitly.

Let the number of plant inputs and outputs, m and p respectively, be fixed and consider the set $\mathcal{G}$ consisting of all minimal plants of the type (MIMOC). We have the decomposition of $\mathcal{G}$ into a countable union of increasing subsets,

$$\mathcal{G} = \bigcup_{l=0}^{\infty} \mathcal{G}_l \qquad \mathcal{G}_l \subset \mathcal{G}_{l+1}$$

where $\mathcal{G}_l$ is the set of all plants stabilizable by a regulator of order l. The inclusion relation follows from Proposition 4.2.

By section 5.2, for all l there is *one* adaptive controller, which we will denote by K_l, stabilizing *any* plant in $\mathcal{G}_l$. Out of these, a switching function controller can be built, thus stabilizing *any plant* $G \in \mathcal{G}$.

Notation. For $l = 0, 1, \ldots$, consider the augmentation of (MIMOC) to the form (MIMOCA). We shall use superscript l to denote a quantity belonging to a particular augmentation, e.g. $\tilde{x}^l$. □

We have the following theorem.

THEOREM 5.4. *For fixed m and p, and for $l = 0, 1, \ldots$, let (g, h, N^l) satisfy the requirements of Theorem 5.1. Then there is a switching function s of rank $\aleph_0$ such that the switching function controller*

$$\begin{aligned} l &= s(h(k)) \\ \tilde{u}^l &= g(h(k)) N^l \tilde{y}^l \\ \dot{k} &= \|\tilde{y}^l\|^2 + \|\tilde{u}^l\|^2 \end{aligned}$$

where we zero the controller states at every instant the switching function switches controller, i.e.

$$z|_{h=\tau_i} := 0, \qquad i = 1, 2, \ldots$$

will stabilize any plant $G \in \mathcal{G}$. This means that, as $t \to \infty$, $\|x(t)\| \to 0$, while the state of the linear constituent of the controller approaches 0, and k stays bounded.

The following refinement of Lemma 3.1 will be needed:

LEMMA 5.5. *Assume that the linear system* (MIMOC) *is observable. For* $l = 0, 1, \ldots$, *consider the augmentation to the form* (MIMOCA). *Then, for all* $x(0)$, *there are constants* c_0 *and* c_1 *such that*

$$\|\tilde{x}^l(t)\|^2 \leq c_0 + c_1 \left(\int_0^t \|\tilde{y}^l(\tau)\|^2 \, d\tau + \int_0^t \|\tilde{u}^l(\tau)\|^2 \, d\tau \right)$$

for $l = 0, 1, \ldots$, *and all* $\tilde{x}^l(0)$, $u^l(\,.\,)$, $t \geq 0$. *Here* c_0 *does not depend on* t, $\tilde{u}^l$, *or* l; *and* c_1 *does not depend on* t, $\tilde{u}^l$, $\tilde{x}^l(0)$ *or* l.

Proof. For fixed l, this is exactly Lemma 3.1, so it only remains to show that c_0 and c_1 can be taken uniformly in l. In the notation used in the proof, but with superscript l added, clearly

$$\left(L_1^T\right)^l = e^{\tilde{A}^l T} = \begin{pmatrix} e^{AT} & 0 \\ 0 & I_l \end{pmatrix}$$

so we have that for $l = 0, 1, \ldots$, $\|L_1^{Tl}\| \leq \|L_1^{T0}\| + 1$ and $\|L_2^{Tl}\| \leq \|L_2^{T0}\| + 1$. Also, for the Gramian M that occurs, we have the estimate

$$\sup_{\|\tilde{x}^l(0)\|=1} \frac{1}{\tilde{x}^l(0)^T \tilde{M}_T^l \tilde{x}^l(0)} = \frac{1}{\min\left(\underline{\sigma}\left(M_T\right), 1\right)}$$

From these arguments, it follows that all estimates in the proof can be taken uniformly in l. ∎

Now there is not very much left to complete the proof:

Proof of the Theorem. Let s be a switching function of rank $\aleph_0$ such that for all $l \in \mathbb{N}$ it holds that

$$g\left(\{\alpha\nu + (\beta, \gamma)\}_{\nu=n}^{\infty} \bigcap \{h : s(h) = l\}\right) = \mathbb{R}^+ \quad \text{for } n \in \mathbb{Z}, \quad \alpha \neq 0, \quad \gamma > \beta \tag{6''}$$

while the sequence of switching points $\{\tau_i\}$ satisfies $\tau_{i+1} - \tau_i \to \infty$ as $t \to \infty$. By the previous lemma, all details of the old proof will now hold. ∎

Remark 1. We might for example take g as before, $g(h) = \sqrt{h}\left(\sin\sqrt{h} + 1\right)$, and let s switch at every local maximum of g. □

Remark 2. The extra condition (6″) is necessary, at least in some weaker form, and it does not follow from the requirement on the switching points. For example, with g as in the previous remark, for $0 < a < b$ and $l_0 > 0$, a switching function s can be constructed satisfying all the other requirements, but never letting $g(h)$ take on values in the interval (a, b) for h such that $s(h) \geq l_0$. This corrects a minor error in [Mårtensson 1985ab]. □

5.5 Conclusions

This chapter is an extended and revised version of the papers [Mårtensson 1985ab]. We have explicitly presented an adaptive controller, capable of stabilizing any plant which is stabilizable with a time-invariant, linear controller of the same structure as the linear constituent of the adaptive controller. Its theoretical raison d'etre was discussed, thereby motivating the title of the chapter. We discussed the different requirements at length. Modifications were covered, including the continuity in the scalar case and the utilization of the extra a priori information of a known bound on the required gain. We showed how to search over the controller structures when not even the order of a stabilizing controller is known.

6

High-gain Based Stabilization

6.1 Introduction and Preliminaries

The concept of 'universal stabilizing controllers' was originally intimately tied to high-gain stabilization. This refers to algorithms that increase the gain of the controller towards infinity. This has later been augmented with concepts such as Nussbaum functions and switching functions. It was first shown in [Mårtensson 1985ab] that high-gain stabilizability is not required in these schemes. In this chapter we return to high-gain based algorithms. Only square, continuous time plants will be considered. This has been discussed in Chapters 2 and 4.

In Chapter 3 we built two powerful tools, Theorem 3.5, page 29, on time-varying singularly perturbed systems, and Theorem 3.18, page 41, on switching function based controllers. These will be the building blocks for the main results on adaptive stabilization in this chapter.

From high-gain stabilization of single-input, single-output plants we know that two crucial concept are the relative degree and the sign of the instantaneous gain. Later in this chapter, multivariable generalizations of these concepts will be defined. Until then, we shall say that the square, strictly proper transfer function $G(s)$ has *multivariable relative degree one* if $\det CB \neq 0$. If it

also holds that $\operatorname{sp} CB \subset \mathbb{C}^+$, then $G(s)$ is said to have *positive instantaneous gain.* These properties are independent of the choice of coordinates on the state space, as is well known. Since CB is the leading coefficient of the power series expansion of $G(s)$ around the point ∞, this is a natural multivariable generalization of the scalar concepts.

Loosely speaking, the basic idea of the present chapter is as follows. First consider a set of plants all having 'positive instantaneous gain'. We find a one-parameter family of controllers, such that for any plant in the set, all controllers with sufficiently high, frozen, value of the parameter k will stabilize it. It remains to show that stability is maintained when the parameter is an increasing function of time. This was demonstrated in a simple case in Theorem 3.11, which gave an algorithm stabilizing all square minimum phase plants with $\operatorname{sp} CB \subset \mathbb{C}^+$.

If the set of plants contains plants which do not have 'positive instantaneous gain', we will resort to a switching function strategy as in Theorem 3.18. We give a finite set of 'precompensators', such that for any plant, there is one 'precompensator' with the property that the 'precompensated plant' has 'positive instantaneous gain'.

In Section 6.2 we solve the purely mathematical problem of finding a finite set of matrices $\mathcal{A}$ such that for any non-singular matrix M, there is at least one $A \in \mathcal{A}$ such that $\operatorname{sp} AM \in \mathbb{C}^+$. One such set will be given explicitly. Section 6.3 combines this with Theorem 3.18, yielding an algorithm capable of stabilizing any square minimum phase plant with CB invertible. This is generalized to higher relative degree in Section 6.4, where a bound on the relative degree is assumed to be known. Unfortunately, we have to put an unpleasant technical condition on certain functions of the Markov parameters. The section concludes with the main theorem of this chapter, summing up almost everything in the chapter.

The problem of Section 6.3 was originally solved in a non-constructive way in [Byrnes-Willems]. The conjecture there is our Proposition 6.2. This, together with the first subsection of Section 6.2, has been published in [Byrnes-Mårtensson-Willems]. Except for [Morse 1985b], which demonstrated an algorithm stabilizing any single-input, single-output minimum phase plant of relative degree one *or* two, no high-gain based algorithm capable of stabilizing plants with only a bound on the relative degree has been published. The solutions to all problems in Section 6.4 are believed to be new.

6.2 Unmixing the Spectrum

In this section we consider the purely mathematical problem of, for an arbitrary positive integer n, finding a set $\mathcal{A} \subset \mathcal{GL}(n) = \mathcal{GL}(n, \mathbb{R})$ such that for any $M \in \mathcal{GL}(n)$, there is an $A \in \mathcal{A}$ such that $\operatorname{sp} AM = \operatorname{sp} MA \subset \mathbb{C}^+$. Such an $\mathcal{A}$ is said to have *the unmixing property*, or to be an *unmixing set.* We are interested

in finding unmixing sets with cardinal number as small as possible. Note that M really has to be nonsingular, since for all $n \times n$-matrices A, AM has at least as many zero eigenvalues as M.

It is a trivial point to note that unmixing sets do exist, for instance $\mathcal{GL}(n)$. It is also trivial that there is countable such, e.g. $\mathcal{GL}(n, \mathbb{Q})$, nonsingular matrices with rational coefficients. First consider the following simple example.

Example 6.1. It is illuminating to solve the unmixing problem for $\mathcal{SO}(2)$. (We leave the unmixing problem for $\mathcal{SO}(1)$ to the reader.) $\mathcal{SO}(2)$ is diffeomorphic to the circle S^1, and for any $g \in \mathcal{SO}(2)$ we can write

$$g(\alpha) = \begin{pmatrix} \cos\alpha & -\sin\alpha \\ \sin\alpha & \cos\alpha \end{pmatrix}$$

for some α. The matrix $g(\alpha)$ corresponds to the rotation the angle α in counter-clock-wise direction. Lemma 6.3, (iii) states that $\operatorname{sp} g(\alpha) \in \mathbb{C}^+$ if and only in $|\alpha| < \pi/2$. Since $g(\alpha_1)g(\alpha_2) = g(\alpha_1 + \alpha_2)$ it follows that we can solve the problem with three matrices—e.g. $\{g(0) = I, g(2\pi/3), g(4\pi/3)\}$—but not with less than three. □

The next result will be that $\mathcal{A}$ can actually be taken finite for all n. Later in this section, an explicit construction will be given, based on the Euler angles on $\mathcal{SO}(n)$. Regardless of this, we shall give an independent proof of the proposition, since on the way we will arrive at many results to be used in the sequel.

PROPOSITION 6.2. *For $n \in \{1, 2, \dots\}$ there exists a number N and a finite set $\mathcal{A} = \{A_1, A_2, \dots, A_N\}$ such that for any $M \in \mathcal{GL}(n)$, $\operatorname{sp} A_j M \subset \mathbb{C}^+$ for at least one $j \in \{1, 2, \dots, N\}$.*

In this section let $\|\,.\,\|$ denote the Euclidean norm on $\mathbb{R}^n$ or the matrix norm induced by the Euclidean norm on $\mathbb{R}^n$, i.e.

$$\|A\| = \max_{x \in S^{n-1}} \|Ax\|_2$$

The proof of the proposition will rest on three lemmas. The first is a further characterization of unitary matrices with its spectrum in the right half plane. The lemma can be said to contain the Routh-Hurwitz' inequalities for unitary matrices.

LEMMA 6.3. *Let Q be a unitary matrix. The following three properties are then equivalent:*

(i) $\operatorname{sp} Q \subset \mathbb{C}^+$

(ii) $\|Q - I\| < \sqrt{2}$

(iii) $Q + Q^* > 0$

Remark 1. Note that, by a well-known result, [Gantmacher, p. 306], (iii) is equivalent with the requirement that all 'north-west' subdeterminants of $Q+Q^*$ are positive. □

For the proof we use another lemma.

LEMMA 6.4. *Let N be a normal matrix. Then for all $\mu \in \mathbb{C}$*

$$\|N - \mu I\| = \max_{i=1,\dots,n} |\lambda_i(N) - \mu|$$

Proof. There is a unitary matrix U such that $U^*NU = D = \operatorname{diag}\{\lambda_1(N), \dots, \lambda_n(N)\}$. Therefore,

$$\|N - \mu I\| = \max_{x \in S^{n-1}} \|(N - \mu I)x\| = \max_{x \in S^{n-1}} \|(N - \mu I)Ux\|$$
$$= \max_{x \in S^{n-1}} \|U^*(N - \mu I)Ux\| = \max_{x \in S^{n-1}} \|(D - \mu I)x\| = \max_{i=1,\dots,n} |\lambda_i(N) - \mu|$$

since U is unitary. This proves the lemma. ■

Proof of Lemma 6.3. Since a unitary matrix is normal and its eigenvalues lie on the unit circle, Lemma 6.4 yields the equivalence of (i) and (ii). Since (ii) $\iff \|(Q - I)x\| < \sqrt{2}$ for all $x \in S^{n-1} \iff x^*(Q^* - I)(Q - I)x < 2$ for all $x \in S^{n-1} \iff x^*(Q + Q^*)x > 0$ for all $x \in S^{n-1} \iff Q + Q^* > 0 \iff$ (iii); the equivalence between (ii) and (iii) is established, and the proof complete. ■

An important tool for the sequel, in particular for the proof of Proposition 6.2, will be the polar decomposition of a square matrix. Even though this is well-known, it is given here just for the sake of completeness.

PROPOSITION 6.5 (POLAR DECOMPOSITION OF SQUARE MATRICES). *For all $M \in \mathbb{R}^{n \times n}$ there are positive semidefinite symmetric matrices P and P' and orthogonal matrices O and O' such that*

$$M = OP = P'O'$$

Furthermore, $P = \sqrt{M^TM}$ and $P' = \sqrt{MM^T}$. In particular, they are uniquely determined. If $\det M \neq 0$ also O and O' are unique.

Proof. See [Gantmacher]. ■

The next lemma, together with the previous proposition, shows that to prove the Proposition 6.2, it is enough to consider $M \in \mathcal{O}(n)$, and also that $\mathcal{A}$ can be taken as a subset of $\mathcal{O}(n)$.

LEMMA 6.6. *Let P be a symmetric, positive definite matrix, and $O \in \mathcal{O}(n)$ an orthogonal matrix with* $\operatorname{sp} O \subset \mathbb{C}^+$. *Then* $\operatorname{sp} OP = \operatorname{sp} PO \subset \mathbb{C}^+$.

Remark 2. It follows that such O in fact belongs to $\mathcal{SO}(n)$. □

Remark 3. This result is fascinating because there are very few general results on eigenvalues of products. □

Remark 4. The converse of Lemma 6.6 is false: If M is a matrix with its eigenvalues in the right half plane, and $M = OP = P'O'$ are its polar decompositions, it is in general not true that O or O' have their eigenvalues in the right half plane. Numerical counter-examples have been found. □

There are two ways of presenting the following proof, one algebraic, based on existence of solutions to linear matrix equations, which might be more mathematically elegant, and one guided by the theory for stability of linear differential equations. Needless to say, it was along the latter lines the proof originally was found. We follow that path here.

Proof. The conclusion is equivalent to the stability of the autonomous linear system

$$\dot{x} = -POx \tag{$\natural$}$$

Put $Q := P^{-1}$. We claim that $x^T Qx$ is a Lyapunov function for ($\natural$), which will prove the lemma. It follows from the formula for the inverse matrix that Q is symmetric. From the assumptions and the spectral theorem, Q is positive definite. Thus, for $x \neq 0$,

$$\frac{d}{dt} x^T Qx = -x^T \left(O^T PQ + QPO\right) x = -x^T \left(O^T + O\right) x < 0$$

where the last inequality used Lemma 6.3. The claim and the lemma follows. ■

Proof of Proposition 6.2. First we solve the unmixing problem for $\mathcal{O}(n)$, which is a compact (Lie-) group. For every matrix $Q \in \mathcal{O}(n)$ there is a matrix $O \in \mathcal{O}(n)$—e.g. $O = Q^T$—such that $\operatorname{sp} QO \subset \mathbb{C}^+$. For fixed O, this property also holds in an open neighborhood $U_O \ni Q$. The union of all such neighborhoods

$$\bigcup_{O \in \mathcal{O}(n)} U_O = \mathcal{O}(n)$$

That is, we have an open cover of $\mathcal{O}(n)$. From the compactness of $\mathcal{O}(n)$ it follows that the open cover has a finite sub-cover, which is the same as to say that there exists a finite set $\mathcal{A} := \{O_1, \ldots, O_N\}$, solving the unmixing problem for $\mathcal{O}(n)$.

From the polar decomposition, Proposition 6.5, and Lemma 6.6 it follows that $\mathcal{A}$ also solves the unmixing problem for $\mathcal{GL}(n)$. ■

By Lemma 6.6 it is enough to solve the unmixing problem for $\mathcal{O}(n)$. Furthermore, note that $\mathcal{O}(n)$ consists of two arc-wise connected components, denoted by $\mathcal{SO}(n)$ and $J\mathcal{SO}(n)$, where $J = \mathrm{diag}\{1, \ldots, 1, -1\}$. So, the unmixing problem splits into two, and if $\mathcal{A}$ solves the problem for $\mathcal{SO}(n)$, then $\mathcal{A} \bigcup J\mathcal{A}$ will solve the problem for $\mathcal{O}(n)$. In the sequel only the unmixing problem for $\mathcal{SO}(n)$ will be considered.

The Crystallographical Approach to Spectrum Unmixing

It is conceptually appealing to find an unmixing set that also has the structure of a group. The following simple proposition on unmixing groups holds.

PROPOSITION 6.7. *A necessary condition for a group $\mathcal{G} \subset \mathcal{SO}(n)$ to have the unmixing property is that the natural representation on $\mathbb{R}^n$ is irreducible. That is, $\mathcal{G}$ must leave no proper subspace invariant.*

Proof. Assume that $\mathcal{G}$ leaves the proper subspace $\mathcal{X}$ invariant. Then, since $\mathcal{SO}(n)$ acts transitively on S^{n-1} there is a matrix $\tilde{g} \in \mathcal{SO}(n)$ and a vector $x \in S^{n-1} \bigcap \mathcal{X}^{\perp}$ such that $\tilde{g}x \in \mathcal{X}$. Hence, for all $g \in \mathcal{G}$, by the Pythagorean theorem

$$\|g\tilde{g} - I\| \geq \|g\tilde{g}x - x\| = \sqrt{\|g\tilde{g}x\|^2 + \|x\|^2} = \sqrt{2}$$

violating condition (i) of Lemma 6.3. ∎

A crystallographic group is a group of rigid motions of n-space leaving a crystal structure, i.e. a lattice, invariant. With respect to a lattice basis, it is easily seen that the linear constituent of such a motion is represented by a matrix with integer entries and determinant 1. These are a natural choice for finding unmixing groups.

Another natural choice for candidates for unmixing groups, especially after the results in the previous subsection, is the orthogonal matrices with integer coefficients. Unfortunately, this does not work for large n.

$\mathcal{O}(n, \mathbb{Z})$ is the subgroup of $\mathcal{O}(n)$ generated by the permutation matrices and the signature matrices. The order of $\mathcal{O}(n, \mathbb{Z})$ is clearly $2^n n!$. We will show that, for n large enough, these matrices do not suffice. More precisely, we have the following proposition.

PROPOSITION 6.8. *For n large enough, there is a matrix $A \in \mathbb{R}^{n \times n}$ such that* sp $QA \not\subset \mathbb{C}^+$ *for all $Q \in \mathcal{O}(n, \mathbb{Z})$.*

Proof. Put

$$A = \begin{pmatrix} \frac{1}{\sqrt{n}} & -a_{n-1} & -a_{n-2} & -a_{n-3} & \cdots & -a_1 \\ \frac{1}{\sqrt{n}} & b_{n-1} & 0 & 0 & \cdots & 0 \\ \frac{1}{\sqrt{n}} & -a_{n-1} & b_{n-2} & 0 & \cdots & 0 \\ \frac{1}{\sqrt{n}} & -a_{n-1} & -a_{n-2} & b_{n-3} & \cdots & 0 \\ \vdots & \vdots & \vdots & \vdots & & \vdots \\ \frac{1}{\sqrt{n}} & -a_{n-1} & -a_{n-2} & -a_{n-3} & \cdots & b_1 \end{pmatrix}$$

where $a_i = 1/\sqrt{i^2+i}$ and $b_i = i/\sqrt{i^2+i}$. For the convenience of the reader, we show A for $n = 10$.

$$A = \begin{pmatrix} 0.316 & -0.105 & -0.118 & -0.134 & -0.154 & -0.183 & -0.224 & -0.289 & -0.408 & -0.707 \\ 0.316 & 0.949 & 0 & 0 & 0 & 0 & 0 & 0 & 0 & 0 \\ 0.316 & -0.105 & 0.943 & 0 & 0 & 0 & 0 & 0 & 0 & 0 \\ 0.316 & -0.105 & -0.118 & 0.935 & 0 & 0 & 0 & 0 & 0 & 0 \\ 0.316 & -0.105 & -0.118 & -0.134 & 0.926 & 0 & 0 & 0 & 0 & 0 \\ 0.316 & -0.105 & -0.118 & -0.134 & -0.154 & 0.913 & 0 & 0 & 0 & 0 \\ 0.316 & -0.105 & -0.118 & -0.134 & -0.154 & -0.183 & 0.894 & 0 & 0 & 0 \\ 0.316 & -0.105 & -0.118 & -0.134 & -0.154 & -0.183 & -0.224 & 0.866 & 0 & 0 \\ 0.316 & -0.105 & -0.118 & -0.134 & -0.154 & -0.183 & -0.224 & -0.289 & 0.817 & 0 \\ 0.316 & -0.105 & -0.118 & -0.134 & -0.154 & -0.183 & -0.224 & -0.289 & -0.408 & 0.707 \end{pmatrix}$$

It is a straightforward check to verify that $A \in \mathcal{O}(n)$. (Actually, $A \in \mathcal{SO}(n)$, but this will not be used.) From numerical computations, it is seen that A has its eigenvalues in the right half plane for $n \leq 23$. For $n \geq 24$ there is a pair of complex conjugated eigenvalues in the left half plane. The calculations were carried out for n up to 168, and showed that the real part of the leftmost eigenvalues decreased with increasing n. E.g. for $n = 24$ the leftmost eigenvalues are $-0.0035 \pm 1.0000i$, and for $n = 100$ they are $-0.2344 \pm 0.9721i$. The calculations were done with the matrix manipulation program CTRL-C, [CTRL-C], which uses double precision arithmetics. No significant change was observed when the computations were performed in single precision arithmetics.

Next it will be shown that every nontrivial permutation of the rows, together with changes of sign, will generate a non-positive subdeterminant of $QA + (QA)^*$, of order either 1 or 2, thus violating condition (iii) of Lemma 6.3.

By inspecting A, we see that in order to avoid zeros in the main diagonal (which really is a zero subdeterminant of order 1), row i, for $i \geq 2$, can only be moved upwards, and row 1 will be moved down in every nontrivial permutation.

Say that row i is moved to row 1. Since the (1,1)-element should be positive, row i must not change sign. Now consider S, the subdeterminant of order 2, formed by the elements $(1,1)$, $(1,i)$, $(i,1)$, and (i,i) of $QA + (QA)^*$. By a trivial computation,

$$S = \frac{4}{\sqrt{n}} a_{n-i+1} - \left(b_{n-i+1} - \frac{1}{\sqrt{n}}\right)^2$$

Since $b_j \geq 1/\sqrt{2}$ for all j, S is negative for n sufficiently large. More precisely, since $a_j \leq 1/\sqrt{2}$, we arrive at the estimation

$$S \leq -\frac{1}{2} + \frac{3\sqrt{2}}{\sqrt{n}} - \frac{1}{n}$$

so $S < 0$ for $n \geq 68$. This ends the proof. ∎

Remark 5. Strictly speaking, the proposition has been shown only for n between 68 and 168. □

The Euler angles on $SO(n)$

The remainder of this section will be devoted to the explicit construction of a finite set $\mathcal{A} \subset O(n)$ with the unmixing property. In Example 6.1 the unmixing problem was solved for $n = 2$. This result is generalized to arbitrary n. The construction will rely on the Euler angles on $SO(n)$. Since these do not seem to be very well known for $n > 3$, we give the result in full. Because of the close relationship with group theory, the matrices will in this subsection be denoted by lower-case letters.

Notation. Let $g_k(\alpha)$ denote the matrix corresponding to counter-clock-wise rotation the angle α in the (x_{k+1}, x_k)-plane. Explicitly,

$$g_k(\alpha) = \text{block diag}\left\{\underbrace{1,\ldots,1}_{k-1}, \begin{pmatrix} \cos\alpha & -\sin\alpha \\ \sin\alpha & \cos\alpha \end{pmatrix}, 1, \ldots, 1\right\}$$

THEOREM 6.9 (THE EULER ANGLES ON $SO(n)$). *Any element $g \in SO(n)$ can be written in the form*

$$g = g^{n-1} \cdots g^1$$

where

$$g^k = g_1(\theta_1^k) \cdots g_k(\theta_k^k)$$

for some θ_j^k, $k = 1, \ldots, n-1$, $j = 1, \ldots, k$ *satisfying*

$$0 \le \theta_1^k < 2\pi$$
$$0 \le \theta_j^k < \pi \qquad j \ne 1$$

These are unique, except when $\theta_k^k = 0$ *or* π *for some* $k = 2, \ldots, n-1$.

Proof. See [Vilenkin, pp. 438–439]. ■

Definition 6.10. By the *Euler angles* of g we shall mean the numbers θ_j^k, $k = 1, \ldots, n-1$, $j = 1, \ldots, k$. We also write $\theta = (\theta_1, \ldots, \theta_N)^T = (\theta_1^1, \ldots, \theta_{n-1}^{n-1})^T$, where $N = n(n-1)/2$. The corresponding matrix will sometimes be written as $g(\theta)$. □

Remark 6. In the language of differentiable manifolds, the inverse of the mapping the Euler angles constitutes is a C^ω-coordinate chart from the manifold $SO(n)$, with a variety of lower dimension removed, to an open subset of $\mathbb{R}^{n(n-1)/2}$. □

In the sequel the following estimate will be used.

LEMMA 6.11. *Let* $g_1, \ldots, g_m$ *be* $n \times n$*-matrices and suppose that for* $i = 1, \ldots, m$ *and some* α *it holds that* $\|g_i - I\| < \alpha$. *Then*

$$\|g_1 \cdots g_m - I\| < (\alpha + 1)^m - 1$$

Proof. We show the lemma by induction over m. For $m = 1$ there is nothing to prove. Assuming the lemma for $m - 1$, we have

$$\begin{aligned}\|g_1 \cdots g_m - I\| &= \|(g_1 \cdots g_{m-1} - I)(g_m - I) + (g_1 \cdots g_{m-1} - I) + (g_m - I)\| \\ &< \left((\alpha+1)^{m-1} - 1\right)\alpha + (\alpha+1)^{m-1} - 1 + \alpha = (\alpha+1)^m - 1\end{aligned}$$

which is the induction step. ■

Of course, in the light of Lemma 6.3, we are interested of getting the right hand side equal to the 'magic number' $\sqrt{2}$. Introduce the following notation.

Notation. Let the $SO(n)$-matrices with their eigenvalues in the right half plane be denoted by Ω, i.e.

$$\Omega = \{g \in SO(n) : \operatorname{sp} g \subset \mathbb{C}^+\}$$

Put

$$N := \dim SO(n) = \frac{n(n-1)}{2}$$

Denote the solution of $(\alpha+1)^N - 1 = \sqrt{2}$ by β. Explicitly,

$$\beta = \sqrt[N]{1+\sqrt{2}} - 1$$

Also, denote

$$\varphi := \arccos\left(1 - \frac{\beta^2}{2}\right)$$

Finally, we let $M = \lceil \pi/\varphi \rceil$. □

The following simple lemma reveals the meaning of φ.

LEMMA 6.12. *If $|\theta_j^k| < \varphi$ for $k = 1, \ldots, n-1$, $j = 1, \ldots, k$, then $g(\theta) \in \Omega$.*

Proof. By a simple computation, $\|g_j(\theta_j^k) - I\| = \sqrt{2 - 2\cos\theta_j^k} < \sqrt{2 - 2\cos\varphi} = \beta$. The lemma now follows from Lemma 6.11. ■

A Successful Construction

We are now ready for the main result. It can informally be described as: Put a lattice with side-length π/M on $\mathbb{R}^N$. Then the image of the lattice points under the mapping given by the Euler angels has the unmixing property. Furthermore, it is a group.

THEOREM 6.13. *Let*

$$\mathcal{A} = \left\{ g(\theta) : \theta_j^k = n_j^k \frac{\pi}{M}, \qquad n_j^k \in \mathbb{Z}, \quad k = 1, \ldots, n-1; \quad j = 1, \ldots, k; \right\}$$

Then

(i) For $n \geq 3$ it holds that $\mathcal{A} \subset \mathcal{SO}(n)$ is a subgroup of order less than $2^{n-1}M^N$.

(ii) For all $g(\theta) \in \mathcal{SO}(n)$ there is at least one $g(\bar{\theta}) \in \mathcal{A}$ such that $g(\bar{\theta})g(\theta) \in \Omega$.

By the theorem together with Lemma 6.6, the group $\mathcal{A} \bigcup J\mathcal{A}$, where $J = \mathrm{diag}\{1, 1, \ldots, 1, -1\}$, solves the unmixing problem for $\mathcal{GL}(n)$.

Remark 7. For $n = 2$ instead equality holds in (i), i.e. $\mathrm{card}\,\mathcal{A} = 4$. □

Remark 8. Note that for $g(\theta) \in \mathcal{A}$, we have $g(\theta)^T = g(\theta)^{-1} = g(-\theta) \in \mathcal{A}$. Especially, $\mathcal{A} = \mathcal{A}^T$. □

Proof. We first prove (i). The order of $\mathcal{A}$ follows from Theorem 6.9. Note that "less than" follows from the non-uniqueness. To show that $\mathcal{A}$ is a subgroup it only remains to show that for $g(\theta_1), g(\theta_2) \in \mathcal{A}$, it holds that $g(\theta_1)g(\theta_2) = g(\theta_3) \in \mathcal{A}$. All elements of $g(\theta_1)g(\theta_2)$ are polynomials in $\sin\theta_j^k$ and $\cos\theta_j^k$, where $\theta_j^k = n_j^k\pi/M$. By using the standard trigonometric formulas, this can be rewritten to the corresponding element of $g(\theta_j^k)$. Hence θ has the form indicated in the theorem, and it follows that $\mathcal{A}$ is a subgroup.

For the proof of (ii), note that for any $g = g(\theta) \in \mathcal{SO}(n)$ there is a matrix $g(\bar{\theta}) \in \mathcal{A}$ such that $|\theta_j^k - \bar{\theta}_j^k| < \varphi$ for $k = 1, \ldots, n-1$, and $j = 1, \ldots, k$. By (i), $g(\bar{\theta})^{-1} = g(\bar{\theta})^T \in \mathcal{A}$. We claim that $g(\bar{\theta})^T g(\theta) \in \Omega$, which will complete the proof. For $j = 0, \ldots, N$, define $\tilde{\theta}_{(j)} = \left(\theta_1, \ldots, \theta_{j-1}, \bar{\theta}_j, \ldots, \bar{\theta}_N\right)^T$. We have

$$\|g(\bar{\theta})^T g(\theta) - I\| = \left\| \prod_{l=1}^{N} g\left(\tilde{\theta}_{(l-1)}\right)^T g\left(\tilde{\theta}_{(l)}\right) - I \right\|$$

The components of $\tilde{\theta}_{(l)}$ and $\tilde{\theta}_{(l-1)}$ coincide, except for the l'th position. Therefore, for j, k corresponding to l,

$$\begin{aligned}\left\| g\left(\tilde{\theta}_{(l-1)}\right)^T g\left(\tilde{\theta}_{(l)}\right) - I \right\| &= \|\hat{g}^T g_j(\bar{\theta}_j^k - \theta_j^k)\hat{g} - I\| = \|g_j(\bar{\theta}_j^k - \theta_j^k) - I\| \\ &= \sqrt{2 - 2\cos\left(\bar{\theta}_j^k - \theta_j^k\right)} < \sqrt{2 - 2\cos\varphi} = \beta\end{aligned}$$

for some orthogonal matrix $\hat{g}$. So the claim, and thus (ii), now follows from Lemma 6.12 and Lemma 6.3. ∎

Remark 9. Note that to claim that $\mathcal{O}(n, \mathbb{Z})$ is unmixing is exactly the same as to say that the theorem holds with $M = 2$. □

No particular attempt has been made to find the smallest possible set (or group) with the unmixing property. We will make a few comments on this.

Remark 10. For $n = 2$, the theorem gives a 4-element group, to be compared with the minimal unmixing set, which has cardinality 3. For $n = 3$, we get $M = 10$, i.e. a group of order slightly less than $2^2 10^3 = 4000$. This is clearly much higher than is needed. Numerical 'experiments' on randomly generated matrices have indicated that the group of rotations of the 3-dimensional cube is unmixing. This group have an irreducible representation on $\mathcal{SO}(3)$ as the matrix group $\mathcal{G} \subset \mathcal{SO}(3, \mathbb{Z})$ generated by the matrices

$$a = \begin{pmatrix} -1 & 0 & 0 \\ 0 & -1 & 0 \\ 0 & 0 & 1 \end{pmatrix} \qquad b = \begin{pmatrix} -1 & 0 & 0 \\ 0 & 1 & 0 \\ 0 & 0 & -1 \end{pmatrix} \qquad c = \begin{pmatrix} 0 & 0 & 1 \\ 1 & 0 & 0 \\ 0 & 1 & 0 \end{pmatrix}$$

The order of $\mathcal{G}$ is 12. It is the only irreducible representation of the rotational component of any crystallographical group in 3 dimensions, [Brown-Bülow-Neubüser-Wondratschek-Zassenhaus].

Remark 11. For large n we have

$$M = \frac{\pi N}{\log\left(1+\sqrt{2}\right)} + o(N)$$

Thus, for large n,

$$\operatorname{card} \mathcal{A} \approx 2^{n-1} \left(\frac{\pi n(n-1)}{2\log\left(1+\sqrt{2}\right)} \right)^{n(n-1)/2}$$

This grows faster than any exponential. □

Remark 12. A lower bound for card $\mathcal{A}$ can be achieved in the following way. Since $SO(n)$ is a compact (Lie-) group, it has an invariant measure, the *Haar-measure*, [Warner], which we will denote by dg. With

$$\mu = \int_\Omega dg$$

there can be no unmixing set $\mathcal{A}$ of cardinality less than $1/\mu$. There is an explicit description of the Haar-measure expressed in the Euler angles, [Vilenkin],

$$dg = A_n \prod_{k=1}^{n-1} \prod_{j=1}^{k} \sin^{j-1} \theta_j^k \, d\theta_j^k$$

where

$$A_n = \prod_{k=1}^{n} \frac{\Gamma(k/2)}{2\pi^{k/2}}$$

Here Γ denotes the Γ-function, described e.g. in [Ahlfors]. This integral can, at least in principle, be evaluated at least numerically. □

6.3 Relative Degree One, Minimum Phase Plants

This section will address the problem of stabilizing the minimum-phase, square plant (MIMOC), assuming that CB is invertible. The algorithm will be based on the switching function controller idea. Recall that switching functions and related concepts were introduced in Section 3.5. Essentially all the work has been done in Chapter 3 and in the previous section. We formulate the algorithm as a theorem.

THEOREM 6.14. *For $m = 1, 2, \ldots$, there is an integer M, a finite set $\mathcal{Q} = \{Q_1, \ldots, Q_M\} \subset \mathcal{O}(m)$, and a sequence of switching points $\{\tau_i\}$ such that for any switching function $s(k)$ of rank M with associated switching points $\{\tau_i\}$, the switching function controller*

$$y = -kQ_{s(k)}y$$
$$\dot{k} = \|y\|^2 + \|u\|^2$$

will stabilize any $m \times m$-plant of the type (MIMOC) *satisfying*

(i) $\det C(sI - A)^{-1}B = 0$ *implies that* $s \in \mathbb{C}^-$,

(ii) $\det CB \neq 0$

Furthermore, one such $\mathcal{Q}$ was given explicitly in Theorem 6.13, and on page 43 a sequence $\{\tau_i\}$ was given.

Proof. Since CB is non-singular, there is a change of basis on the state space of (MIMOC), expressed by the matrix $T \in \mathcal{GL}(n)$ such that

$$T^{-1}B = \begin{pmatrix} 0 \\ B' \end{pmatrix} \qquad CT = \begin{pmatrix} 0 & I \end{pmatrix}$$

where B' is non-singular. By Proposition 6.2, or alternatively, Theorem 6.13, there is a finite unmixing set $\mathcal{Q} \subset \mathcal{O}(n)$. Say that i is such that $\operatorname{sp} Q_i B' \in \mathbb{C}^+$. Then it follows from Theorem 3.11 on page 34 that the controller

$$u = -kQ_i y$$
$$\dot{k} = \|y\|^2 + \|u\|^2$$

is f-stabilizing for large t, where $f(y, u, k, t) := \|y\|^2 + \|u\|^2$. Furthermore, f is L^2-compatible, so the theorem follows from Theorem 3.18 on page 41. ∎

Remark 1. In Theorem 4.10 it was shown how to modify the controller to interpolate between the Q_i's, thus yielding a C^∞-controller. □

6.4 Higher Relative Degree

This section is devoted to the solution of the problem of adaptively stabilizing square, minimum phase plants of type (MIMOC), for which a bound on the relative degree is known, and which satisfies a certain condition on simple null-structure of the Markov parameters.

We will precede by solving harder and harder problems, instead of formulating the *Big Theorem* at the start of the section, and devoting the sequel to its proof.

First we solve the problem of adaptively stabilizing a single-input, single-output minimum phase plant, with positive instantaneous gain, and a bound on the relative degree known. For this, a one-parameter linear controller is given. We solve the 'frozen parameter singular perturbation problem', i.e. we show that our proposed controller, with sufficiently large frozen parameter, will stabilize any plant in the set of plants under consideration. Then the switching function machinery developed in Section 3.5 is invoked to turn up the gain step-wise. This is later generalized to the square multi-input, multi-output case, where the 'instantaneous gain' is positive—a concept we define. Finally, the results of Section 6.2 on unmixing the spectrum is tied in to solve the full problem.

The SISO problem

Recall that a polynomial $p(s) \in \mathbb{R}[x]$ is called a *Hurwitz-polynomial* if $p(s) \neq 0$ for $\operatorname{Re} s \geq 0$. Consider the set of plants

$$\mathcal{G} = \Big\{ g(s) \in \mathbb{R}(x) : g(s) = \frac{n(s)}{d(s)}; \quad n, d \in \mathbb{R}[x]; \quad \deg d - \deg n \leq r^*; \\ n \text{ is Hurwitz; and the highest non-zero coefficient of } n \text{ is positive} \Big\}$$

For l a non-negative integer, introduce the one-parameter family of l'th order controllers

$$c(s,k) = k^{\alpha} \frac{h(s)}{r(s,k)}$$

where

$$r(s,k) = (s + k^{2^l}) \ldots (s + k^4)(s + k^2)$$

$$\alpha = \sum_{j=1}^{l} 2^j + 1 = 2^{l+1} - 1$$

and $h(s)$ is an arbitrary monic Hurwitz polynomial of degree l. For $l = 0$, $c(s,k)$ reduces to k.

PROPOSITION 6.15. *If $l \geq r^* - 1$, then for any plant in $\mathcal{G}$ there is a k_0 such that the closed loop system $g(s)/(1 + c(s,k)g(s))$ is stable for all $k \geq k_0$.*

Since we will make heavy use of this result in the sequel, we reformulate it in a more mathematical setting. It is easy to see that the latter formulation implies the former.

Notation. By writing $x \sim k^\gamma$ we shall mean that the quantity x is asymptotically proportional to k^γ as $k \to \infty$, i.e.

$$\lim_{k\to\infty} \frac{x}{k^\gamma} \neq 0, \infty$$

In particular, the limit exists. □

PROPOSITION 6.16. *Let α, $r(s,k)$, and $h(s)$ be as above, and $\mu \in \mathbb{C}^+$. Suppose that $n(s)$, $d(s) \in \mathbb{R}[x]$ are such that $n(s)$ is Hurwitz, $\deg d(s) = n$, the highest non-zero coefficients of d and n have the same sign, and that $1 \leq \deg d(s) - \deg n(s) = r \leq l+1$. Then the polynomial*

$$p_k(s) := r(s,k)d(s) + \mu k^\alpha h(s)n(s)$$

will have its zeros in the left half plane for all sufficiently large k. More precisely, denoting the zeros by $s_1, \ldots, s_{n+l}$, it holds that $s_1 \sim k^{2^l}, \ldots, s_{r-1} \sim k^{2^{l-r+2}}, s_r \sim k^{1+2+\cdots+2^{l-r+1}}$, while $s_{r+1}, \ldots, s_{n+l}$ will converge to the zeros of $h(s)n(s)$.

Remark 1. Note that s_r is slower than the rest of the unbounded zeros. □

Proof. Assume without restriction that $d(s)$ is monic. Since $\alpha > \sum 2^j$ it follows that the second term of $p_k(s)$ will dominate over the first on every bounded subset of $\mathbb{C}$. The claim on the finite zeros now follow e.g. from Rouché's theorem, see [Ahlfors]. For the infinite zeros, the claim follows from a consideration of the different powers of k in the coefficients of $s^{n+l-1}, \ldots, s^{n+l-r}$ in $p_k(s)$. The argument goes as follows: Put $p_k(s) =: s^{n+l} + a_1(k)s^{n+l-1} + \cdots + a_{n+l}(k)$. Also define $\sigma_1, \ldots, \sigma_{n+l}$ by $\sigma_i = k^{2^i}$ for $i = 1, \ldots, l$, while $\sigma_{l+1}, \ldots, \sigma_{n+l}$ are defined to be the negative of the zeros of $d(s)$, in some ordering. If $r > 1$ then

$$a_1 = -\sum_{j=1}^{n+l} s_j = \sum_{j=1}^{n+l} \sigma_j \sim \sum_{j=1}^{l} k^{2^j} \sim k^{2^l}$$

Thus there is at least one zero $\sim k^{2^l}$, and no 'faster' zero. Also, if $r > 2$,

$$a_2 = \sum_{i\neq j} s_i s_j = \sum_{i\neq j} \sigma_i \sigma_j \sim \sum_{i\neq j} k^{2^i} k^{2^j} \sim k^{2^l + 2^{l-1}}$$

Since the finite zeros converge to points in the open left half plane, no zero $s_i \sim k^\gamma$ for negative γ. So there is exactly one zero $s_1 \sim k^{2^l}$, and this is negative. Also, there is at least one zero $\sim k^{2^{l-1}}$. Applying the same argument a total number of $r-1$ times, we conclude that $s_2, \ldots, s_{r-2}$ behave as claimed,

and at least one zero $\sim k^{2^{l-r+2}}$. We also have that $a_r \sim s_1 \dots s_r \sim k^\alpha = k^{2^l+2^{l-1}+\dots+1}$. Since $2^{l-r+2} > 2^{l-r+1} + \dots + 1$, it follows that s_{r-1} is negative, and is the only zero $\sim k^{2^{l-r+2}}$. Furthermore, since there are exactly r infinite branches,

$$s_r \sim \frac{s_1 \dots s_r}{s_1 \dots s_{r-1}} \sim \frac{a_r}{a_{r-1}} \sim \frac{k^\alpha}{k^{2^l} \dots k^{2^{l-r+2}}} = k^{1+2+\dots+2^{l-r+1}}$$

Since $a_1, \dots, a_{r-1} > 0$, $\arg a_r$ approaches $\arg \mu$, it holds that $\arg s_r$ approaches $\arg -\mu$, so $s_r \in \mathbb{C}^-$ for large k. This completes the proof. ∎

Remark 2. The problem was originally solved with *Newton-Puiseux diagram*, which is a graphical method for determining the asymptotic behavior of the zeros of a polynomial in two complex variables, see [Postlethwaite-MacFarlane] or [Newton]. □

Remark 3. The purpose behind the unorthodox choice of the polynomial $r(s,k)$ is to separate all closed loop poles in different powers of k, thereby making it harmless to over-estimate the relative degree of the plant. A more naive approach, inspired e.g. by [Zames-Bensoussan], is the following: Let

$$c(s,k) = k\frac{h(s)}{(Ts+1)^l}$$

where $T \to 0$ as $k \to \infty$, in some sense fast compared to k. This approach does not work in general if we over-estimate the relative degree of $g(s)$, i.e. if $l > r-1$. Say that $l = r$. Then the infinite branches are asymptotically determined by

$$(Ts+1)^l + k = 0$$

i.e.

$$s_i = \frac{-1 + \varepsilon_i \sqrt[l]{-k}}{T} + o(\sqrt[l]{k})$$

where $\varepsilon_1, \dots, \varepsilon_l$ are the primitive l-th roots of unity. For $l \geq 3$, some s_i must have a positive real part. □

Stabilization of minimum phase SISO systems

Next it is shown how to tie this result to previous results to stabilize minimum phase single-input, single-output plants, with a bound on the relative degree. Since later the result will be generalized to a more general multivariable setting, we here make the assumption that the instantaneous gain is positive. Recall that a switching function of rank $\aleph_0$ is a surjective function $s : \mathbb{R}^n \longrightarrow \mathbb{Z}^+$. This, and related concepts has been defined on page 40. We have the following result:

PROPOSITION 6.17. *Let $\mathcal{G}$ and $c(s,k)$ be as defined on page 92, and assume that $l \geq r^* - 1$. Then, for s a switching function of rank $\aleph_0$ and $\{\tau_i\}$ a suitable switching point sequence, the controller*

$$u(t) = -c(p, s(k))y(t)$$
$$\dot{k} = y^2 + u^2$$

will stabilize any plant $g \in \mathcal{G}$ in the usual sense, i.e. $(x, z, k) \to (0, 0, k_\infty)$ as $t \to \infty$, where x and z denote the state in a realization of g and c respectively, and $k_\infty < \infty$.

Proof. It is easily seen that this controller is on the form (SFC) and that $f := y^2 + u^2$ is L^2-compatible, so the result is an immediate consequence of Theorem 3.18, together with Remark 5 on page 41. ∎

Remark 4. The requirement on s to be a switching function of rank $\aleph_0$ is more than is needed. The same proof will be valid if s is just required to take on arbitrarily large values. □

Remark 5. A result like Theorem 3.11 on page 34, where the parameter in the controller is allowed to increase continuously, would definitively be more satisfying. Further discussion, and some motivation of the difficulties, are given in Section 7.2. □

Multivariable Extensions

In order to give multivariable extensions of the previous result, some new terminology is introduced.

Definition 6.18. Consider the multivariable linear plant (MIMOC) with $m = p$. Put

$$G(s) = C(sI - A)^{-1}B = \sum_{i=1}^{\infty} CA^{i-1}Bs^{-i} =: \sum_{i=1}^{\infty} M_i s^{-i}$$

The sums are convergent if $|s| > \varrho(A)$. We shall say that $G(s)$ has *weak relative degree* $\underline{r}$ if $M_1 = \cdots = M_{\underline{r}-1} = 0$, $M_{\underline{r}} \neq 0$, and *strong relative degree* $\overline{r}$ if $\det M_1, \ldots, \det M_{\overline{r}-1} = 0$, while $\det M_{\overline{r}} \neq 0$. Note that $\underline{r} \leq \overline{r}$.

If there is a $s_0 \in \mathbb{R}^+$ such that for some $\alpha > 0$ it holds that $\arg \lambda_i G(s) \in [-\frac{\pi}{2} + \alpha, \frac{\pi}{2} - \alpha]$ for $i = 1, \ldots, m$ and all real $s \geq s_0$ we will call $G(s)$ a plant with *positive instantaneous gain.*

We shall say that (MIMOC) satisfies *Assumption Simple Null Structure (SNS)* if for $i = 1, \ldots, \overline{r}$ the matrices $\sum_1^i M_i s^{-i}$ have simple null structure, except possibly for isolated s. □

Note that these definitions agree with the usual single-input, single-output concepts, and also with the preliminary definitions given in Section 6.1. Also observe that (MIMOC) will, by the initial value theorem for the Laplace transform, have positive instantaneous gain if and only if the impulse response matrix $H(t) := \mathcal{L}^{-1}G(s)$ has its eigenvalues in a fixed, closed sector in the right half plane for sufficiently small $t > 0$. This property accounts for the name.

For l a non-negative integer, we introduce the most natural multivariable generalization of the controller $c(s,k)$, namely

$$C(s,k) = c(s,k)I_m$$

The following result holds.

PROPOSITION 6.19. *If $l \geq r^* - 1$, then for any G in the set*

$$\mathcal{G} = \Big\{ G(s) \in \mathbb{R}^{m\times m}(x) : \bar{r} \leq r^*; \det G(s) \neq 0 \text{ for } \operatorname{Re} s \geq 0;$$
$$G(s) \text{ has positive instantaneous gain;}$$
$$G(s) \text{ satisfies assumption SNS} \Big\}$$

for sufficiently large, fixed k, the control law $u = -C(p,k)y$ will stabilize G.

Proof. The poles of the closed loop system are given as the zeros of $\det(I + c(s,k)G(s))$. These are by definition the s for which $-1/c(s,k)$ is an eigenvalue of $G(s)$.

By a standard argument based on e.g. Rouché's theorem, the finite endpoints of the root locus as $k \to \infty$ are exactly the zeros of $\det c(s,k)G(s)$, which by assumption resides in the left half plane.

Let $d(s)$ be the monic least common multiple of the denominators of the elements in $G(s)$, i.e. the characteristic polynomial of the plant. Since the eigenvalues λ_i of $G(s)$ are the zeros of the polynomial $q(s,\lambda) := \det(\lambda d(s)I - d(s)G(s))$ and $G(s)$ is strictly proper, the eigenvalues have an asymptotic expansion, see e.g. [Brockett-Byrnes],

$$\lambda_i = \mu_i s^{-p_i/q_i} + o(s^{-p_i/q_i}), \qquad p_i, q_i \in \mathbb{Z}^+, \qquad i = 1,\ldots,m$$

when $\mathbb{R} \ni s \to \infty$. By assumption SNS, the quantities p_i/q_i are all integers, [Byrnes-Stevens]. Since $G(s)$ is assumed to have positive instantaneous gain, it follows that $\mu_i \in \mathbb{C}^+$. It is easy to see that $\underline{r} \leq p_i/q_i \leq \bar{r}$ for $i = 1,\ldots,n$. The infinite branches of the root locus are therefore given as the unbounded zeros of

$$-\frac{1}{c(s,k)} = -\frac{r(s,k)}{k^\alpha h(s)} = \lambda_i = \mu_i s^{-p_i/q_i} + o(s^{-p_i/q_i})$$

for $i = 1,\ldots,m$. By Proposition 6.16, these are in the the left half plane for k sufficiently large. This completes the proof. ∎

Remark 6. Other treatments of high-gain root locus can be found in e.g. [Brockett-Byrnes] and [Sastry-Desoer]. It can be shown that the simple null-structure requirement in the latter paper is equivalent to ours. An analysis of the behavior of the root locus in the absence of this condition is found in [Byrnes-Stevens]. □

For the full result it only remains to bring in the results on switching functions and unmixing of the spectrum. Unfortunately, since the weak and strong relative degrees might differ, this is not entirely straightforward, but requires some extra steps. This is taken care of in the following lemma.

LEMMA 6.20. *Consider the set of plants*

$$\mathcal{G} = \{G(s) \in \mathbb{R}^{m\times m}(x) : \bar{r} \leq r^*; \det G(s) \neq 0 \text{ for } \operatorname{Re} s \geq 0\}$$

Let $\mathcal{Q} \subset \mathcal{O}(m)$ be any unmixing set. Then for any $G(s) \in \mathcal{G}$, there is a $Q \in \mathcal{Q}$ such that $QG(s)$ has positive instantaneous gain.

Proof. Use the polar decomposition of $G(s)$, i.e. $G(s) = O(s)P(s)$. We claim that $O(s)$ converges as $\mathbb{R} \ni s \to \infty$. By Lemma 6.6 this will complete the proof, since if $Q \in \mathcal{O}(n)$ is such that $\operatorname{sp} QO(\infty) \subset \mathbb{C}^+$, then $\operatorname{sp} QG(s) \subset \mathbb{C}^+$ for large $s \in \mathbb{R}$. Since $G(s)$ is non-singular for large s, by Proposition 6.5 $O = O(s)$ can be written as $O = G(s)\left(G(s)^T G(s)\right)^{-1/2}$. Every element of $O(s)$ is therefore a meromorphic function in s. Since it is bounded at infinity, it follows from a familiar argument using the Cauchy estimate, [Ahlfors], that every element is a rational function of s. Therefore $O(s)$ converges as $s \to \infty$, completing the proof. ■

Summing up, we have the following result, containing almost all results of this chapter:

THEOREM 6.21. *Let $\mathcal{G}$ and $c(s,k)$ be as above, and $l \geq r^* - 1$. Then there is an integer M, a finite set $\mathcal{Q} = \{Q_1, \ldots, Q_M\} \subset \mathcal{O}(m)$, and a sequence of switching points $\{\tau_i\}$ such that for any switching function $s(k)$ of rank $\aleph_0$ with associated switching points $\{\tau_i\}$, the switching function controller*

$$\begin{aligned} u &= -c(p, s(k))Q_{s(k) \bmod M}y \\ \dot{k} &= \|y\|^2 + \|u\|^2 \end{aligned}$$

will stabilize any plant $G \in \mathcal{G}$. Furthermore, one such $\mathcal{Q}$ was given explicitly on page 88, and page 43 gave a sequence $\{\tau_i\}$.

Proof. Analogous to Proposition 6.17. ■

6.5 An Example

In the laboratory at the Department of Automatic Control in Lund there is a process called the *ball and beam*. This consists on an electrical motor whose shaft is connected to an approximately one meter long beam. There is a slot in the beam in which a steel ball is rolling. With the use of a resistance wire, a measurement of the position of the ball is available. Also the angle of the beam is available as output. The input is the current to the motor.

A standard simple linearized model for the transfer function an electric motor from current to position of the shaft is $b/s(s+a)$, where $a > 0$. The dynamics from the angle of the beam to the position of the ball is, for small angles, clearly a double integrator. Thus, the transfer function from current to position of the ball is given by

$$g(s) = \frac{b}{s^3(s+a)}$$

where we consider a and b as unknown. Theorem 6.18 gives e.g. the controller

$$\begin{aligned} c(p,k) &= \sigma(s(k))s(k)^{15}\frac{(p+1)^3}{(p+s(k)^8)(p+s(k)^4)(p+s(k)^2)} \\ \dot{k} &= y^2 + u^2 \end{aligned}$$

where $s : \mathbb{R}^+ \longrightarrow \mathbb{Z}^+$ is a suitable switching function, and $\sigma : \mathbb{Z}^+ \longrightarrow \{-1,1\}$ a sign-switching function. This will stabilize $g(s)$ for all a and $b \neq 0$. When trying to simulate this process in Simnon, severe numerical problems occured, because of the size of the coefficients, and since the system turned out to be extremely stiff, i.e. to have a very large difference in the time scale of the different states. Instead, the controller

$$\begin{aligned} c(p,k) &= \sigma(k)s(k)^7\frac{(p+1)^3}{(p+s(k)^2)^3} \\ (\sigma, s) &= \begin{cases} (1,1) & k < 2 \\ (-1,1) & 2 \leq k < 4 \\ (1,2) & 4 \leq k < 16 \\ (-1,2) & 16 \leq k < 256 \\ (1,3) & 256 \leq k < 65536 \\ \dots \end{cases} \\ \dot{k} &= y^2 \end{aligned}$$

was simulated. It can easily be shown in the same way as before that this controller is stabilizing for single-input, single-output minimum phase plants of relative degree four. A simulation where $a = b = 1$ is shown in Figure 6.1. The upper diagram shows the logarithms of $|y|$ (dashed line) and $|u|$ (solid line). (Actually, for practical reasons $\log(|y|+1)$ and $\log(|u|+1)$ is shown

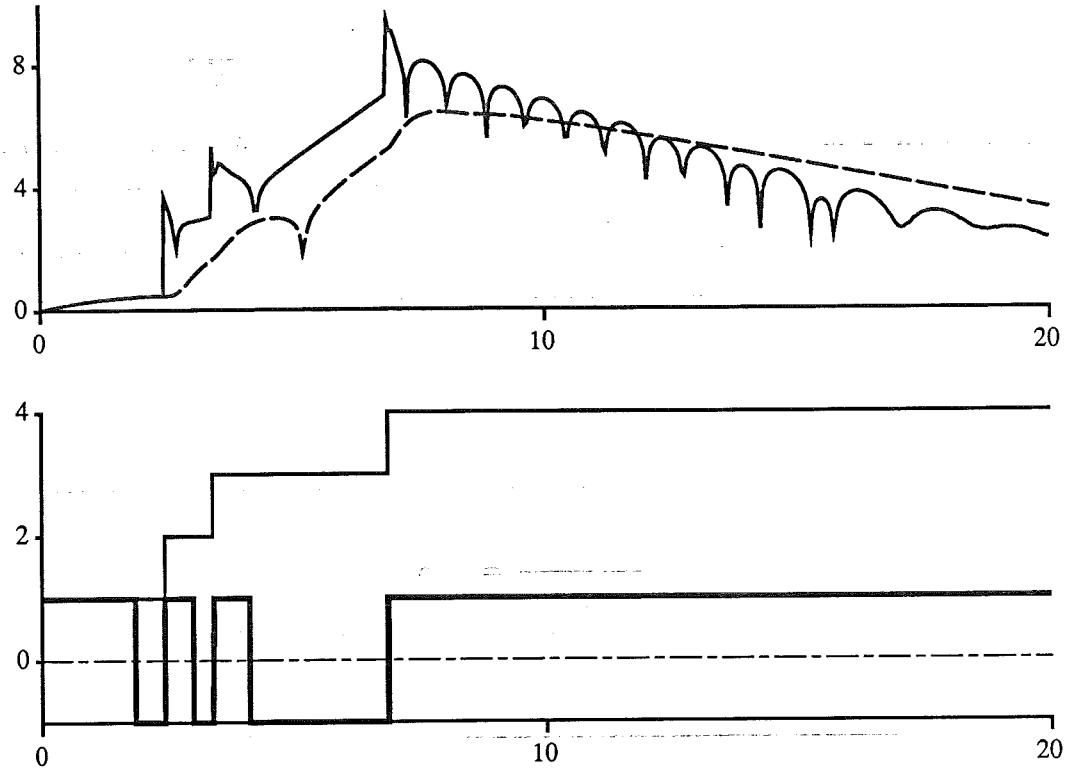

Figure 6.1. Simulation of adaptive stabilization of the ball and beam process.

instead.) The lower diagram shows s and $\sigma(s)$. Note the wild, but fairly short excursions of u when s switches.

6.6 Conclusions

This chapter has been closer to the tradition that gave rise to the original 'universal controllers'—namely high-gain stabilization—than the rest of the thesis.

Section 6.2 solved the purely mathematical "unmixing problem" in a constructive way. The main tool in the construction was the Euler angles. In Section 6.3 the solution was used to construct an algorithm for stabilizing multivariable, relative degree one, minimum phase plants. The second main constituent in this algorithm was the switching function machinery developed in Chapter 3. The algorithms were extended to plants of higher relative degree in Section 6.4. Multivariable generalizations of the single-input, single-output concepts of relative degree and positive instantaneous gain were given. A one-parameter family of controllers was presented. This family is capable of stabilizing any minimum phase plant with positive instantaneous gain and a bound on the (strong) relative degree known, for all sufficiently large values of the parameter. In the multivariable case, a certain condition on simple null structure was also required of the plant. By invoking switching functions and unmixing sets, this gave rise to an adaptive algorithm.

7

Conclusions and Suggestions for Further Research

7.1 Introduction

What is the future of adaptive control? Will the results in this thesis have some impact on future practical algorithms? Or will the concept of adaptive control vanish out in the mist, replaced by a unified theory of non-linear control? Is there a use for todays adaptive algorithms?

These questions will not be answered here. Instead, we will in a slightly more humble way discuss extensions of the results presented in the thesis, and possible impact on future algorithms, especially in combination with other control strategies in the context of multi-layer control.

Let us start the discussion with a brief resumé of the thesis. On several different levels of precision, we have discussed what to mean by an adaptive controller. Some mathematical tools where given in Chapter 3. More general 'meta'-results were given in Chapter 4, especially the complete characterization of necessary and sufficient a priori knowledge for adaptive stabilization. The

'Turing Machine of Universal Controllers', i.e. an adaptive controller with the greatest stabilizing power possible, was presented in Chapter 5. The problem was specialized to high-gain stabilizable plants in Chapter 6.

7.2 Extensions and Discussion

A beauty spot in Chapter 6 is that for the case of positive instantaneous gain, we could not devise an algorithm which was increasing the gain in the controller in a continuous way. Of course, by the regularizing machinery in Chapter 4, this flaw can to some extent be repaired, but it would have been desirable to use a version of Theorem 3.5 to increase the gain continuously. However, there are some problems associated with this. First, since $k(t)$ and the differential operator p do not commute, the trajectories will depend on the realization chosen for the controller. Secondly, it can be shown that the scheme of Section 6.4 does not fit in the framework of Theorem 3.5. A requirement would thus be to have a generalization of that theorem to an arbitrary number of time-scales. In fact, the author have a proof under fairly restrictive assumptions. It is believed that the requirement of simple null structure is crucial, compare Example 3.10. Unfortunately, it can be shown that among plants with (strong) relative degree greater that one, for all realizations of the controller in Section 6.5, there are plants such that the simple null-structure requirement will be violated. A possible remedy would be to consider controllers of higher relative degree, together with non-minimal realizations.

We conjecture that the requirement of simple null-structure in Section 6.4 will be shown superfluous with a more elaborate proof, at least as long as the gain is increased stepwise in a switching function manner.

The most easily suggested extension of the results in this thesis is to the case of continuous exitation, i.e. the tracking and disturbance problems. This was discussed in Chapter 2. The problem is to ensure that the parameter is not going off to infinity despite the continuous exitation.

An interesting idea is to use optimal stochastic control theory in order to optimally choose between different controllers in a switching function controller manner. In the deterministic case, only the discrete time problem makes sense because of the identity theorem for analytic functions. Actually, this formulation is a generalization of the N-armed bandit problem in stochastic control, see [Kelly].

The problem can of course also be linked with the more total, optimal, stochastic framework of dual control, see Chapter 1.

Another highly interesting path is the extension to stabilization of non-linear plants, pioneered in [Byrnes-Isidori 1984].

All 'universal controllers' presented in this thesis have had a one-dimensional parameter space, where the parameter increases monotonically. The need for

taking on a multitude of different 'directions' is ensured by letting that parameter parametrize a 'sufficiently dense' curve in the parameter space of the linear constituent of the controller. In this respect, they differ form the traditional adaptive controllers, which have a higher-dimensional parameter space, thus being able to converge in a more straight-forward fashion. These can often be interpreted as local gradient algorithms, and hence have most often good local performance, but behave worse globally.

It is the belief of this author that a sensible, practical algorithm probably should be based on searching in a parameter space of larger dimension than one. Also, all control problems more composite than the isolated stabilization problems require the parameters to have a possibility to decrease, in contrast to e.g. $\dot{k} = \|y\|^2 + \|u\|^2$.

In practice, some form of a priori knowledge of the time-scale of the unstable modes, and of the magnitude of the "gain" is always present. This has not been taken into account in this work.

In the content of *multi-layer control*, see Chapter 1, algorithms related to ours might possibly be used. One idea would be to use some form of 'universal stabilizer' to first of all get a grip of the process, and to get it under control, and then feed a more elaborate algorithm, aimed at local steady-state operation, with sensible starting values.

Practical experiments can be performed on the basis of this thesis. The ball and beam process in our laboratory at the Department of Automatic Control in Lund was described in Section 6.5. It is the belief of the author that an adaptive controller of this process can be implemented on a dedicated high-performance personal computer.

⋆ ⋆ ⋆

By the results of this thesis and its predecessors, listed in Chapter 1, it has been made plausible that there should exist reasonable adaptive control algorithms, which do not require the four assumptions (i) – (iv) described on page 7. No algorithm in this thesis is claimed to be practically usable. It would be a most exiting topic for the future to find practical algorithms.

References

ADOBE SYSTEMS INCORPORATED (1985): *PostScript Language Reference Manual*, Addison-Wesley, Reading, Massachusetts.

AHLFORS, L. V. (1979): *Complex Analysis*, McGraw-Hill, New York.

AIZERMAN, M. A. (1949): "On a Problem Concerning the Stability in the Large of Dynamical Systems", *Uspekhi Mat. Nauk* **4**, 187–188.

ÅRZÉN, K. E. (1986): "Expert Systems for Process Control", *Proceedings of 1st. Int. Conf. on Applications of Artificial Intelligence in Engineering Practice, April 1986, Southampton, U.K.* (to appear).

ÅSTRÖM, K. J. (1983): "Theory and Applications of Adaptive Control—A Survey", *Automatica* **19** no. 5, 471–486.

——— (1985): "A Simnon Tutorial", Report CODEN: LUTFD2/(TFRT-3176)/1–87/(1985), Dept. of Automatic Control, Lund Institute of Technology, Lund, Sweden.

ÅSTRÖM, K. J., J. ANTON and K-E ÅRZÉN (1986): "Expert Control", *Automatica* (to appear).

ÅSTRÖM, K. J., P. HAGANDER and J. STERNBY (1984): "Zeros of Sampled Systems", *Automatica* **20** no. 1, 31–38.

ÅSTRÖM, K. J. and B. WITTENMARK (1984): *Computer Controlled Systems—Theory and Design*, Prentice-Hall Inc., Englewood Cliffs, New Jersey.

BAR-NESS, Y. and G. LANGHOLZ (1985): "Preservation of Controllability Under Sampling", *International Journal of Control* **22** no. 1, 39–47.

BELLMAN, R. (1961): *Adaptive Control Processes: A Guided Tour*, Princeton University Press, Princeton, New Jersey.

BRASCH, F. M. and J. B. PEARSON (1970): "Pole Placement Using Dynamic Compensators", *IEEE Transactions on Automatic Control* **AC-15** no. 1, 34–43.

BRICKELL, F. and R. S. CLARK (1970): *Differentiable Manifolds*, Van Nostrand Reinhold, London.

BROCKETT, R. W. (1983): "Asymptotic Stability and Feedback Stabililzation", in BROCKETT, R. W., R. S. MILLMAN, and H. J. SUSSMANN, (Eds.): *Differential Geometric Control Theory*, Birkhäuser, Boston.

BROCKETT, R. W. and C. I. BYRNES (1981): "Multivariable Nyquist Criteria, Root Loci, and Pole Placement: A Geometric Viewpoint", *IEEE Transactions on Automatic Control* **AC-26** no. 1, 271–284.

BROWN, H., R. BÜLOW, J. NEUBÜSER, H. WONDRATSCHEK and H. ZASSENHAUS (1978): *Crystallographic Groups of Four-Dimensional Space*, Wiley-Interscience, New York.

BYRNES, C. I. (1983): "Control Theory, Inverse Spectral Problems, and Real Algebraic Geometry", in BROCKETT, R. W., R. S. MILLMAN, and H. J. SUSSMANN, (Eds.): *Differential Geometric Control Theory*, Birkhäuser, Boston.

——— (1985): "Necessary Conditions In Adaptive Control", in BYRNES, C. I. and A. LINDQUIST (Eds.): *Proc. 7th International Symposium on the Mathematical Theory of Network and Systems*, North Holland, Amsterdam.

BYRNES, C. I. and B. D. O. ANDERSON (1983): "On the Stabilizability of Multivariable Systems by Minimum Order Compensation", *Proceedings of the 22nd IEEE Conference on Decision & Control*, San Antonio, TX, pp. 1358–1362.

——— (1984): "Output Feedback and Generic Stabilizability", *SIAM Journal of Control and Optimization* **22** 3, 362–380.

BYRNES, C. I. and A. ISIDORI (1984): "A Frequency Domain Philosophy for Nonlinear Systems, with Applications to Stabilization and to Adaptive Control", *Proceedings of the 23rd IEEE Conference on Decision & Control*, Las Vegas, NV, pp. 1569–1573.

——— (1985): "Asymptotic Expansions, Root-Loci and the Global Stability of Nonlinear Feedback Systems", in FLIESS, M. and M. HAZEWINKEL (Eds.): *Algebraic and Geometric Methods in Nonlinear Control.*

BYRNES, C. I., B. MÅRTENSSON, and J. C. WILLEMS (1985): "Crystallographic Algorithms for Adaptive Stabilization", in BYRNES, C. I. and A. LINDQUIST (Eds.): *Proc. 7th International Symposium on the Mathematical Theory of Network and Systems*, North Holland, Amsterdam.

BYRNES, C. I. and P. K. STEVENS (1982): "The McMillan and Newton Polygons of a Feedback System and the Construction of Root Loci", *Int. J. Control* **35** no. 1, 29–53.

BYRNES, C. I. and J. C. WILLEMS (1984): "Adaptive Stabilization of Multivariable Linear Systems", *Proceedings of the 23rd IEEE Conference on Decision & Control*, Las Vegas, NV, pp. 1574–1577.

CTRL-C (1983): *CTRL-C User's Guide.*, Systems Control Technology, Inc. Palo Alto, California, USA.

DREYFUS, H. L. (1979): *What Computers Can't Do—The Limits of Artificial Intelligence*, Harper & Row, New York.

GANTMACHER, F. R. (1977): *The Theory of Matrices, Vol I–II*, Chelsea Publishing Company, New York, N. Y.

GHOSH, B. K., "Simultaneous Partial Pole Placement—A New Approach to Multimode System Design", *IEEE Transactions on Automatic Control.* Submitted.

HALE, J. K. (1969): *Ordinary Differential Equations*, Wiley-Interscience, New York, London, Sydney, Toronto.

HOLMBERG, U., M. LILJA and B. MÅRTENSSON (1986): "High-Level Computer Tools for Linear System Analysis", Dept. of Automatic Control, Lund Institute of Technology, Lund, Sweden. In preparation.

HÖRMANDER, L. (1983): *The Analysis of Linear Partial Differential Operators 1*, Springer-Verlag, Berlin, Heidelberg.

KABAMBA, P. T. and R. W. LONGMAN (1980): "Exact Pole Assignment Using Direct or Dynamic Output Feedback", *Proc. 3rd VPI SU/AIAA Symp. Dynamics Contr. Large Flexible Spacecraft*, Blacksburg, VA.

KELLY, F. P. (1981): "Multi-Armed Bandits with Discount Factor Near One: The Bernoulli Case", *The Annals of Statistics* **9** 5, 987–1001.

KNUTH, D. E. (1984): *The TEXbook*, Addison-Wesley Publishing Company, Reading, Massachusets.

KOKOTOVIĆ, P. (1984): "Applications of Singular Perturbation Techniques to Control Problems", *SIAM Review* **26** 4, 501–551.

LEVINSON, N. and R. M. REDHEFFER (1970): *Complex Variables*, Holden-Day, Oakland, California.

LJUNG, L. (1985): "System Identification—Theory for the user, Part I–III", Linköping Institute of Technology, Linköping.

MÅRTENSSON, B. (1982): "Zeros of Sampled Systems", Report CODEN: LUTFD2/(TFRT-5266)/1–022/(1982), Dept. of Automatic Control, Lund Institute of Technology, Lund, Sweden.

——— (1984a): "Pascal Systems in Simnon", Report CODEN: LUTFD2/(TFRT-7278)/1–14/(1984), Dept. of Automatic Control, Lund Institute of Technology, Lund, Sweden.

——— (1984b): "Multivariable Linear Systems in Simnon", Report CODEN: LUTFD2/(TFRT-7281)/1–22/(1984), Dept. of Automatic Control, Lund Institute of Technology, Lund, Sweden.

——— (1985a): "The Order of Any Stabilizing Regulator is Sufficient A Priori Information for Adaptive Stabilization", *Systems & Control Letters* **6** no. 2, 87–91.

——— (1985b): "Adaptive Stabilization of General Multivariable, Continuous or Discrete Time Linear Systems", in BYRNES, C. I. and A. LINDQUIST (Eds.): *Proc. 7th International Symposium on the Mathematical Theory of Network and Systems*, North Holland, Amsterdam.

——— (1986): "Experiences with Computerized Document Preparation Tools", Dept. of Automatic Control, Lund Institute of Technology, Lund, Sweden. In preparation.

MORSE, A. S. (1983): "Recent Problems in Parameter Adaptive Control", in LANDAU, I. D. (Ed.): *Outils et Modeles Mathematiques pour l'Automatique, l'Analyse de Systemes et le Traitement du Signal, Editions du CNRS* **3**, 733–740.

——— (1984a): "An Adaptive Control for Globally Stabilizing Linear Systems with Unknown High-Frequency Gains", *Proc. INRIA Conf. on Analysis and Optimization of Systems, Lecture Notes in Control and Information Sciences* 62, 58–68, Springer-Verlag, Berlin.

——— (1984b): "New Directions in Parameter Adaptive Control", *Proceedings of the 23rd IEEE Conference on Decision & Control*, Las Vegas, NV, pp. 1566–1568.

——— (1985a): "A $(4n+1)$-Dimensional Observer-Based Algorithm for the Model Reference Adaptive Control of Any Strictly Proper Minimum-Phase System with Dimension not exceeding n and Relative Degree not Exceeding 2", in BYRNES, C. I. and A. LINDQUIST (Eds.): *Proc. 7th International Symposium on the Mathematical Theory of Network and Systems*, North Holland, Amsterdam.

——— (1985b): "A Three-Dimensional Universal Controller for the Adaptive Stabilization of Any Strictly Proper, Minimum Phase System with Relative Degree Not Exceeding Two", *IEEE Transactions on Automatic Control* **AC-30** no. 12, 1188–1191.

MUDGETT, D. R. and A. S. MORSE (1984): "Adaptive Stabilization of Linear Systems with Unknown High-Frequency Gains", *Proceedings of the 23rd IEEE Conference on Decision & Control*, Las Vegas, NV, pp. 666–668.

——— (1985a): "Adaptive Stabilization of Linear Systems with Unknown High-Frequency Gains", *IEEE Transactions on Automatic Control* **AC-30** no. 6, 549–554.

——— (1985b): "A Smooth Algorithm for Adaptive Stabilization of a Discrete Linear System with an Unknown High-Frequency Gain", *Proceedings of the 1985 American Control Conference*, Boston, MA, pp. 77–80.

——— (1985c): "Adaptive Stabilization of a Discrete Linear System with an Unknown High-Frequency Gain", *IEEE Transactions on Automatic Control* **AC-30** no. 8, 798–802.

NEWTON, I. (1680): *Geometria Analytica.*

NUSSBAUM, R. D (1983): "Some Remarks on a Conjecture in Parameter Adaptive Control", *Systems & Control Letters* **3** no. 5, 243–246.

NYQUIST, H. (1932): "Regeneration Theory", *Bell System Technical Journal* **11**, 126–147.

PARKS, P. C. (1966): "Liapunov Redesign of Model Reference Adaptive Control Systems", *IEEE Transactions on Automatic Control* **AC-11** no. 3, 362–367.

POSTLETHWAITE, I. and A. G. J. MACFARLANE (1979): *A Complex Variable Approach to the Analysis of Linear Multivariable Feedback Systems, Lecture Notes in Control and Information Sciences* 12, Springer-Verlag, New York.

ROHRS, C. (1982): "Adaptive Control in the Presence of Unmodeled Dynamics", Ph.D. Thesis , Dept. of Elec. Eng. and Computer Sciences, M. I .T., Cambridge, MA.

ROHRS, C., L. VALAVANI, M. ATHANS, and G. STEIN (1982): "Robustness of Adaptive Control Algorithms in the Precence of Unmodeled Dynamics", *Proceedings of the 21st IEEE Conference on Decision & Control*, Orlando, FL, pp. 3–11.

ROSENBLATT, F. (1961): *Principles of Neurodynamics, Perceptrons and the Theory of Brain Mechanisms*, Spartan Books, Washington D. C.

SHAPIRO, L. (1975): *Introduction to Abstact Algebra*, McGraw-Hill, New York.

SARIDIS, G. N. (1983): "Intelligent Robotic Control", *IEEE Transactions on Automatic Control* **AC-28** no. 5, 547–557.

SASTRY, S. S. and C. A. DESOER (1983): "Asymptotic Unbounded Root Loci —Formulas and Computation", *IEEE Transactions on Automatic Control* **AC-28** no. 5, 557–568.

SHANNON, C. E. (1949): "Communications in the Presence of Noise", *Proc. IRE* **37**, 10–21.

SIMMONS, G. F. (1963): *Introduction to Topology and Modern Analysis.*, McGraw-Hill Kogakusha, Ltd, Tokyo.

SMITH, K. T. (1983): *Primer of Modern Analysis*, Springer-Verlag, New York.

TSYPKIN, YA. Z. (1973): *Foundations of the Theory of Learning Systems*, Academic Press Inc., New York.

TURING, A. M. (1936): "On Computable Numbers, with an Application to the Entscheidungsproblem", *Proc. London Mathematical Society* **2** no. 42, 230–265 and no. 43 544–546.

TURING, A. M. (1950): "Computing Machinery and Intelligence", *Mind* **LIX** no 236.

VILENKIN, N. JA. (1968): *Special Functions and the Theory of Group Representations*, American Mathematical Society, Providence, Rhode Island.

WARNER, F. W. (1983): *Foundations of Differentiable Manifolds and Lie Groups, Graduate Text in Mathematics* 94, Springer-Verlag, New York.

WILLEMS, J. C. and C. I. BYRNES (1984): "Global Adaptive Stabilization in the Absence of Information on the Sign of the High Frequency Gain", *Proc. INRIA Conf. on Analysis and Optimization of Systems, Lecture Notes in Control and Information Sciences* 62, 49–57, Springer-Verlag, Berlin.

ZAMES, G. and D. BENSOUSSAN, "Multivariable feedback, Sensitivity, and Decentralized Control", *IEEE Transactions on Automatic Control* **AC-28** no. 11, 1030–1035.

ZIEGLER, J. G. and N. B. NICHOLS (1943): "Optimum Settings for Automatic Controllers", *Trans. ASME* **65**, 433–444.

Index

A

adaptation problem, 2
adaptive control, 1–12
—classical assumptions of, 7
—convergence of, 17, 18
—counterexamples to, 7
—model reference, 4, 17
—nec. and suff. conditions for, 9
—parameter, 4
adaptive controller, 2
—as learning machine, 3
—as non-linear controller, 16
—parameter space of, 3, 16
—state space of, 3, 16
—problems as set relation, 19
—safety net for, 8
—supervisory loop for, 8
Aizerman, M. A., 29
Aizerman's conjecture, 29
$\aleph_0$, 14
almost (A, B)-invariant subspaces, 60
almost periodic functions, 67
$\mathcal{A}\mathcal{M}\mathcal{S}$-TEX, iv
Anderson, B. D. O., 47
Andersson, L., iv
anti-periodicity requirement, 69
Anton, J., 9
Apple, iv
artificial intelligence, 2, 9, 10
Årzén, K.-E., 9
ASEA, 1, 8
associated switching points, 40
Assumption Bounded Required Gain, 21, 74
Assumption Simple Null Structure, SNS 21, 95
Åström, K. J., iv, 1, 9, 36, 60
Athans, M., 7
augmented plant, 24, 41, 58, 67, 75
autotuning, 9, 36
averaging techniques, 4

B

ball and beam, 98, 103
Bar-Ness, Y., 61
Bellman, R., 2
Bensoussan, D., 94
Bohl distribution, 15
Bounded Required Gain, 74
Brasch, F. M., 47
Brockett, R. W., 16, 17, 25, 47, 48, 97
Byrnes, C. I., iv, 8, 24, 25, 35, 45, 46, 47, 48, 80, 97, 102

C

$\mathbb{C}$, 14
$\mathbb{C}^+$, 14, 15
$\mathbb{C}^\alpha$, 14
$\mathcal{C}^\infty$-manifold, 16
Cauchy estimate, 97
Cauchy-Schwartz inequality, 30
circle S^1, 81
compactness, 83
computer, intelligent, 2
controllability, preservation under sampling, 61
control theory, 11
crystallographical groups, 84
CTRL-C, 35, 85

D

$\mathcal{D}'$, 54
δ-generating sequence, 73
dense curve on the unit sphere, 70
dense curves, 67
dense subset, 71
describing function method, 36
Desoer, C. A., 97
distributions, 52, 73
Dreyfus. H. L., 2
dual control, 6, 102
dynamic feedback, 24

E

$\mathcal{E}$, 52
eigenvalue of a product, 83
eigenvalues, asymptotic expansion of, 31
Elevitch, C., iv

Euler angles, 86
excitation, poor, 7
expert control, 9, 103
expert systems, 9

F

Fourier transform, 54
Foxboro, 1
function lacking all periodicity, 68

G

Γ-function, 90
gain scheduling, 5
generic property, 14
Ghosh, B. K., 58
$\mathcal{GL}(n)$, 15, 81
$\mathcal{GL}(n,k)$, 15
Grail, Holy, 2
group of rotations on the cube, 89
Grönwall's lemma, 32

H

Haar-measure on $\mathcal{SO}(n)$, 90
Hagander, P., iv, 60
Hägglund, T., 9, 36
Harvard University, iv
Helmke, U., 46
heuristics, 9, 10
high-frequency roll-off, 50
high-gain stabilization, 60
Hilbert basis, 54
Hill, D., iv
Holmberg, U., 35
Holy Grail, 2
homomorphism theorem, 53
Hurwitz polynomials, 92

I

im A, 15
image of linear mapping, 15
instantaneous gain, 7, 8, 38, 95
integrators in the loop, 62
intelligent computer, 2
intelligent control, 9
inverse matrix formula, 83
irreducible group-representations, 84
Isidori, A., 9, 24, 102

J

Johansson, R., iv

K

Kabamba, P. T., 24
ker A, 15
kernel of linear mapping, 15
Knuth, D. E., iv
$k(x)$, 14
$k[x]$, 14
k^n, 14

L

Langholz, G., 61
Laplace transform, 15
LaserWriter, iv
learning controller, 1
learning control system, 2
learning machine, 2
Lilja, M., iv, 35
linear adaptive controller, 16
linear controllers, synthesis of, 3
linear operators on Hilbert spaces, 27
linear plant, parameter dependent, 5
Ljung, L, 52
Longman, R. W., 24
Lyapunov functions, 83
L^2, 28, 30, 35, 54
L^2-compatible functions, 28, 57, 59, 68, 74

M

MacDraw, iv
MacFarlane, A. G. J., 48, 94
Macintosh, iv
MACSYMA, 36
Mårtensson, B., iv, 8, 9, 23, 35, 46, 47, 60, 66, 79, 80
mathematical engineering, 7, 11
mathematical model, idealized, 7
mathematical models, 11
measurement, 52
(MIMOC), 19, 25
(MIMOCA), 25
(MIMOD), 25
(MIMODA), 25
minimum phase plants, 7
model, 4
model reference adaptive control, 4
Morse, A. S., 8, 9, 39, 80
Morse, conjecture of, 8
MRAC, 4, 35
Mudgett, D. R., 9
multi-layer control, 9, 103

N

$\mathbb{N}$, 14
N-armed bandit problem, 102
Newton, I., 94
Newton-Puiseux diagrams, 94
Nicols, N. B., 36
non-linear control system, 16
non-linear plants, control of, 5
non-linear systems, 10, 102
non-linear systems, linearization of, 10
non-minimum phase plants, 58
normal matrices, 82
normed space of controllers, 67
norm of the state estimate lemma, 26, 75
Novatune, 8
Nussbaum-function, 9, 39

Nussbaum, R. D., 8, 39
Nyquist criterion, 48
Nyquist, H., 48

O

observability, 27
observability, preservation under sampling, 61
$\mathcal{O}(n)$, 15, 81
$\mathcal{O}(n,k)$, 15
$\mathcal{O}(n,\mathbb{Z})$, 84

P

parameter adaptive control, 4
parameter estimator, recursive, 4
parameter space, 16
Parks, P. C., 35
partitioning of controller space, 67
Pearson, J. B., 47
perceptrons, 2
performance adaptive control, 4
permutation matrices, 84
PID-controllers, 9, 36, 62
polar decomposition of a matrix, 82
positive instantaneous gain, 80, 95
Postlethwaite, I., 48, 94
POSTSCRIPT, iv
probability distribution, conditioned, 6
proper rational functions, 14
Pythagorean theorem, 84

Q

$\mathbb{Q}$, 14

R

$\mathbb{R}$, 14
$\varrho(A)$, 14
"real life", 7
reduced order models, 5
reference signal, 18, 62
regulator problem, 17, 18
relative degree, 7, 8, 9, 14
—multivariable, 21
—one, 79
—strong, 95
—weak, 95
relay control, 6, 36
relay oscillations, 36
Riemann surface, 49
robust control, 11
Rohrs, C., 7
root-locus, 60
root locus, state space version, 33
Rosenblatt, F., 2
Rouché's theorem, 93, 96
Routh-Hurwitz' inequalities for unitary matrices, 81

S

sampled controller, 60
sampling, 53
sampling of plants, 60
sampling theorem, Shannon's, 53
Saridis, G. N., 9
Sastry, S. S., 97
searching control, 75
searching over the dimension, 75
self-organizing control, 2
self oscillating adaptive system, 6
self-tuning regulator, 4, 17
—direct, 5
servo problem, 17
set of controllers f-stabilizing a set of plants, 41
set of controllers stabilizing a set of plants, 41
(SFC), 40
Shannon, C. E., 53
$\overline{\sigma}(A)$, 14
$\underline{\sigma}(A)$, 14
signature matrices, 84
Simnon, iv, 35, 98
simple null-structure, 29, 33, 95
singular perturbation, 28, 33
singular values, 14
skew line on the torus, 70
slow adaptation, 34, 39, 68
—concept of, 4
slow parameter variation, 5
slow time-variation, 4
smooth linear adaptive controller, 16
SNS, 95
SOAS, 6
$\mathcal{SO}(n)$, 15, 81, 84
$\mathcal{SO}(n,k)$, 15
$\mathcal{SO}(2)$, 81
sp A, 14
spectral theorem, 83
spherical coordinates, 69
square plants, 21
stability indicator, 52
state space, 16
Stein, G., 7
Sternby, J., 60
Stevens, P. K., 97
Stone-Weierstrass' theorem, 55
STR, 4
strictly positive real plants, 7
strictly proper rational functions, 14
strong relative degree, 95
successful learning, meaning of, 2
supervisory control, 9
switching function, 38, 75, 90, 94, 97
—controller, 40, 90, 97
—of rank r, 40
switching points, 40

symbolic manipulation, 36
S^{n-1}, 15

T

$\mathbb{T}$, 15
$\mathbb{T}^n$, 15
test functions, 52
TEX, iv, 36
time-varying systems, 28
torus, 15, 70
tracking problem, 17, 18, 62
Tsypkin, Ya. Z., 2
tuning problem, 2
Turing, A. M., 2, 65
Turing machine, 65
Turing Machine controller, 65, 66
Turing test, 2
(TVSP), 29
Tychonov's theorem, 33
type-setting, iv

U

unitary matrices, 81
unit sphere, 15, 67
universal controllers, 8
unmixing property, 80

V

Valavani, L., 7
VAX 11/780, iv
vector bundle, 16

W

weak relative degree, 95
Willems, J. C., 8, 35, 80
Wittenmark, B., iv, 60

Z

$\mathbb{Z}$, 14
$\mathbb{Z}^+$, 14
Zames, G., 94
Ziegler, J.G., 36
Ziegler-Nichols' rules, 36

Bengt Mårtensson

Adaptive Stabilization

Adaptive Stabilization

Bengt Mårtensson

Department of Automatic Control, Lund Institute of Technology

CODEN: LUTFD2/(TFRT-1028)/1-118/(1986)