LUND UNIVERSITY

Self-Tuning Control of the Dissolved Oxygen Concentration in an Activated Sludge System

Rundqwist, Lars

1986

Document Version:
Publisher's PDF, also known as Version of record

Link to publication

Citation for published version (APA):
Rundqwist, L. (1986). *Self-Tuning Control of the Dissolved Oxygen Concentration in an Activated Sludge System*. [Licentiate Thesis, Department of Automatic Control]. Department of Automatic Control, Lund Institute of Technology (LTH).

Total number of authors:
1

General rights
Unless other specific re-use rights are stated the following general rights apply:
Copyright and moral rights for the publications made accessible in the public portal are retained by the authors and/or other copyright owners and it is a condition of accessing publications that users recognise and abide by the legal requirements associated with these rights.
• Users may download and print one copy of any publication from the public portal for the purpose of private study or research.
• You may not further distribute the material or use it for any profit-making activity or commercial gain
• You may freely distribute the URL identifying the publication in the public portal

Read more about Creative commons licenses: https://creativecommons.org/licenses/

Take down policy
If you believe that this document breaches copyright please contact us providing details, and we will remove access to the work immediately and investigate your claim.

LUND UNIVERSITY

PO Box 117
221 00 Lund
+46 46-222 00 00

CODEN: LUTFD2/(TFRT-3180)/1-71/(1986)

Self-tuning Control of the Dissolved Oxygen Concentration in an Activated Sludge System

Lars Rundqwist

Department of Automatic Control
Lund Institute of Technology
April 1986

Department of Automatic Control
Lund Institute of Technology
P.O. Box 118
S-221 00 Lund Sweden

Document name
Thesis for the degree of Teknisk Licentiat

Date of issue
April 1986

Document Number
CODEN:LUTFD2/(TFRT-3180)/1-71/(1986)

Author(s)
Lars Rundqwist

Supervisor
Gustaf Olsson

Sponsoring organisation
The Swedish Board for Technical Development (STU)

Title and subtitle
Self-tuning control of the Dissolved Oxygen Concentration in an Activated Sludge System

Abstract

Self-tuning control of the dissolved oxygen concentration has been implemented in a full scale activated sludge aerator. The accuracy of the process model has been used to get reasonable limits for selecting the sampling period. The adaptation of the controller parameters made it possible to get precise control of the DO concentration. During a test period the standard deviation of the DO concentration was 0.15 mg/l, including periods with saturated air flow. Without any saturations, the standard deviation was 0.02 mg/l, which is roughly a factor 10 less than earlier results on DO control. Further, there are no indications of increasing air demand due to the control system. Instead the air flow demand in a controlled aerator is lower than in a manually controlled aerator, which is in accordance with earlier DO control implementations.

The implemented air production control system, containing pressure control and minimization, implies that decreasing air flow demand will give economical benefits due to decreasing energy demand. The control system starts and stops blowers with automatic priority rotation.

Key words

Classification system and/or index terms (if any)

Supplementary bibliographical information

ISSN and key title

ISBN

Language
English

Number of pages
71

Recipient's notes

Security classification

The report may be ordered from the Department of Automatic Control or borrowed through the University Library 2, Box 1010, S-221 03 Lund, Sweden, Telex: 33248 lubbis lund.

Content

1. Introduction	5
2. Aeration control in the activated sludge process	11
3. Dissolved oxygen control	18
4. Pressure control	38
5. Nonlinear couplings in the control system	51
6. Summary	62
References	65
Appendix	67

1. Introduction

An activated sludge plant for wastewater treatment generally consists of three steps of purification: mechanical, which removes solid material from the influent liquid; biological, which uses bacteria in an aerobic process for degradation of biodegradable material; and finally chemical treatment for removal of e.g. phosphorous compounds. The chemical precipitation may occur both before, simultaneously or after the aeration.

This thesis deals with aeration control in the biological process. A control system using a self-tuning controller, has been implemented and tested at the Käppala Sewage Works, Lidingö, Sweden.

This chapter provides a short process description and a motivation for control. There is also a comparison with some other control schemes reported in the literature.

1.1 General process description

The goal of the aeration process in the activated sludge system is degradation of biological waste into carbon dioxide and water. This is performed by a mixed culture of bacteria, the activated sludge. In some plants the bacteria also degrade nitrogeneous substrates into nitrogen.

An activated sludge system is shown schematically in Fig. 1.1. The influent liquid is fed into an aeration tank, where it is oxygenated e.g. by an air flow through diffusors, and the substrates are used by bacteria in their metabolism. In the clarifier the sludge settles to the bottom of the tank. A small fraction is removed as waste, and the remainder is recycled to the aeration tank. The effluent from the clarifier then contains a reduced amount of biological material.

The effectiveness of the process is dependent on the dominating type of bacteria in the system. If the wrong type of bacteria dominates, the floc forming properties of the sludge is poor and the sludge will not settle in the clarifier.

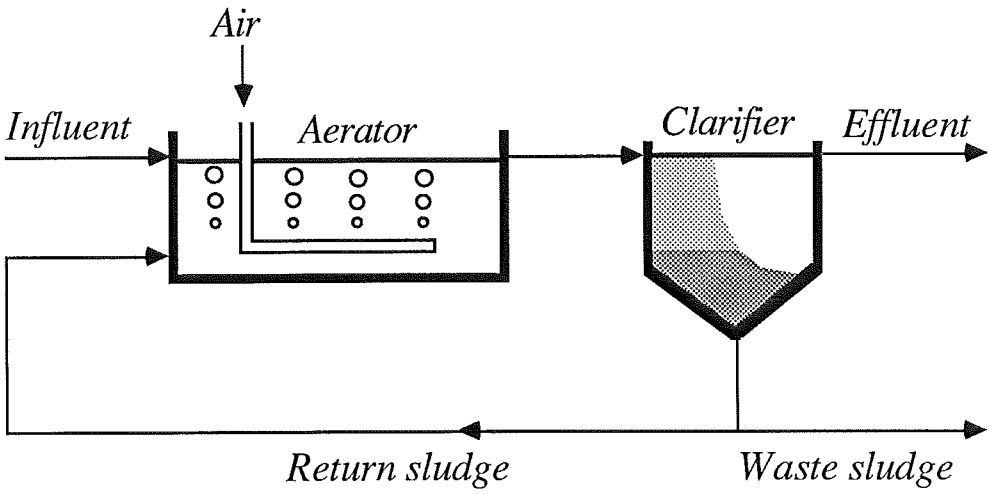

Figure 1.1 An activated sludge system.

Thus viable bacteria and substrates are wasted in the effluent liquid and the plant may violate pollution requirements.

The activated sludge process dynamics is affected by several factors, e.g. hydraulics. The flow through the aeration tank affects process time constants, for example. If the flow is changed drastically this will upset the clarifier causing poor settling of the sludge and an increased effluent suspended solids. The process is also affected by the recycling of the sludge and by the distribution of the influent liquid to the aerator. The respiration of the bacteria is affected by e.g. dissolved oxygen and substrate concentrations, pH, temperature and toxic spillage. A more detailed description of the process can be found in standard textbooks such as Grady and Lim (1980) and Metcalf & Eddy (1972).

1.2 Motivation for control

The control problems in wastewater treatment plants are different from those in chemical processes, since in the latter case the staff has full control of the influent raw material. In wastewater treatment plants control of the influent flow rate is practically impossible. The hydraulic buffering capacity is also limited, but some equalization of the flow rate can be achieved with special tanks or the sewer system.

Diurnal, weekly and seasonal variations in influent flow rate and substrate concentrations cause great variations in dissolved oxygen concentration in the aerator. These variations also influence the sludge settleability. In the worst case the sludge rises, thus creating a process failure. Control of aeration causes more stable conditions in the activated sludge system, resulting in better settleability of the sludge. A more elaborate account of general wastewater treatment control problems can be found in Olsson (1977).

Wastewater treatment plants are also subject to increasing load. This is another case where control might be beneficial, as plant capacity could increase. In one plant, Wells (1979) demonstrates that an aerator with DO control only requires one clarifier, while a manually operated aerator requires two clarifiers to obtain the same effluent properties.

Wells (1979) also demonstrates the effectiveness of automatic dissolved oxygen (DO) concentration control as compared with manual. Due to the large time constant and the unpredictable load variations, the operator often adjusts the air flow in the wrong direction. This causes large variations in DO concentration.

In plants with oxygenation by air flow, DO control typically reduces the air consumption by some 20 %, simply by supplying air only when needed (see Flanagan et al (1977) and Wells (1979)). Less air consumed implies less energy consumed, but there is still a potential for further energy saving by producing the air at lowest possible pressure (see Chapter 4).

One main objective with the implemented control system is evaluation of the process characteristics under closed loop self-tuning control. The results can be more economical operation, better sludge settleability, decreased chemical dosage requirement, etc. If on the other hand the manual control works well it may be difficult to verify an improved effluent water quality under automatic control. Still harder to prove are improvements from using self-tuning control instead of PID control, unless the process has a significant deadtime.

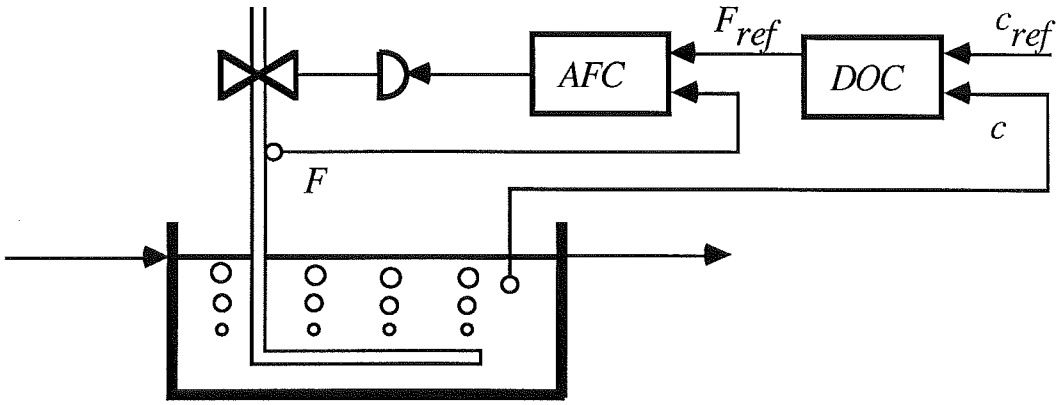

Figure 1.2 Dissolved oxygen control using an air flow rate controller.

1.3 Aeration control

Aeration control usually means DO control in connection with air flow control, which has been reported elsewhere, in e.g Wells (1979), Flanagan et al (1977), Olsson and Hansson (1976) and Tyler (1985). The control strategies reported contain an air flow rate control loop where the setpoint is computed by a DO control loop. The DO controller uses feedback from a DO probe located in the tail end of the aerator (see Fig. 1.2).

Another aeration control scheme is air-to-flow-rate control, where the air flow rate is ratio controlled to the influent wastewater flow rate. This is a feedforward scheme without feedback from the DO concentration in the aerator.

The present work will use the same control structure in Fig. 1.2. The DO controller is a self-tuning regulator, while the air flow controller is a PID controller. In this work none of the return sludge flow rate, waste sludge flow rate, step feed or air flow distribution along the aerator will be controlled. As these control variables are manually operated, they will slowly change the process dynamics and the self-tuning controller adapts its parameters.

1.4 Summary

In the present work self-tuning control of the dissolved oxygen concentration in a full scale activated sludge aerator has been implemented. The accuracy of the process model has been used to get reasonable limits for selecting the sampling period. The adaptation of the controller parameters made it possible to get precise control of the DO concentration. During a test period the standard deviation of the DO concentration was 0.15 mg/l, including periods with saturated air flow. Without any saturations, the standard deviation was 0.02 mg/l, which is roughly a factor 10 less than earlier results on DO control, see e.g. Wells (1979). Further, there are no indications of increasing air demand due to the control system. Instead the air flow demand in a controlled aerator is lower than in a manually controlled aerator, which is in accordance with earlier DO control implementations.

The implemented air production control system, containing pressure control and minimization, implies that decreasing air flow demand will give economical benefits due to decreasing energy demand. The control system starts and stops blowers with automatic priority rotation.

Olsson et al (1985) briefly summarizes the water quality results from a period with self-tuning control at Käppala Sewage Works. Rundqwist (1985) analyses the self-tuning algorithm and proposes a number of anti reset windup precautions for self-tuning controllers.

1.5 Thesis outline

In Chapter 2 there is a summary of different activated sludge configurations, a description of the Käppala plant and the actual control strategies. In Chapter 3 a survey of the dynamics and the importance of the dissolved oxygen concentration in the activated sludge system is presented. Further the DO control is implemented. In Chapter 4 the pressure control is implemented, and in Chapter 5 the nonlinear couplings in the control system are described. Conclusions are summarized in Chapter 6 and references are given. Detailed facts and longer mathematical derivations are presented in an Appendix.

1.6 Acknowledgements

First I would like to thank my supervisor, Gustaf Olsson, who proposed this work and has assisted me with his deep process knowledge. Prof. Karl Johan Åström is acknowledged for valuable discussions. Parallel to the my research, the Käppala Sewage Works made investments in new control equipment. Without these investments the implementation had not been possible. The personnel also gave valuable support during the practical implementation. Asea AB is acknowledged for their assistance in the use of Novatune. Craig Elevitch and Ulf Holmberg have given constructive criticism on the manuscript and Britt-Marie Carlsson has excellently prepared the figures. The work has been supported in part by the Swedish Board for Technical Development (STU, contract 82-3352), which is hereby acknowledged.

2. Aeration control in the activated sludge process

A brief survey of different types of activated sludge processes is presented. Some different aeration mechanisms and control variables are mentioned. A description of the Käppala plant and its control structure then follows.

2.1 Different types of activated sludge configurations

The general structure of an activated sludge system was shown in Figure 1.1. The biological reactor hydraulics may range anywhere from complete mix reactors to tube reactors. The complete mix reactors are equipped with an agitation mechanism to give the desired homogeneous concentration. The tube reactors are long and narrow, and sometimes divided into several subreactors in series. Subreactors may be separately aerated. In this type of reactor the substrate and dissolved oxygen (DO) concentrations vary along the length of the aerator (see Olsson and Andrews (1978)).

The aeration systems are roughly divided into two types, surface aeration and diffused aeration (see standard text, e.g. Metcalf & Eddy (1972)). Surface aeration uses e.g. propellers at surface level to enhance the oxygenation from the atmosphere. Diffused aeration uses either air or pure oxygen, which is supplied through diffusors along the bottom of the aerator. The diffusors give either fine or coarse bubbles. When pure oxygen is used, the aerator is covered. Air is supplied from blowers. The control variable is gas flow rate, which is governed by e.g. a control valve or blower speed.

Process measurements

When controlling the activated sludge process several process variables can be measured, e.g. the DO concentration, BOD_5 (5 day biochemical oxygen demand), TOC (total organic carbon), TOD (total oxygen demand), COD (chemical oxygen demand), SS_{eff} (suspended solids in settler effluent) and MLSS (mixed liquor suspended solids in the aeration tank). The time lag in the BOD_5 measurement is unacceptable for control purposes. The TOC, TOD and COD measurements give no

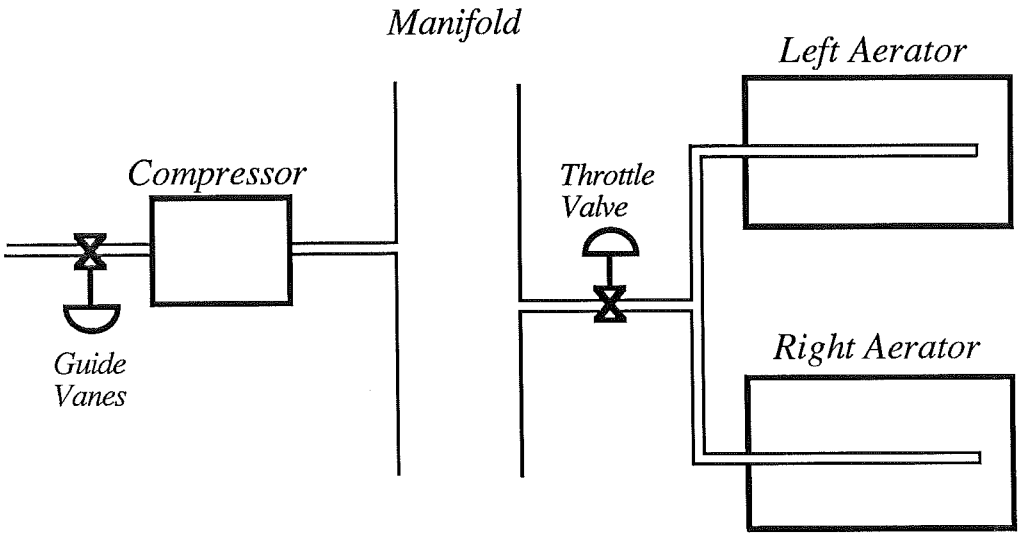

Figure 2.1 Aeration configuration at Käppala. Five compressors and six aerators are connected to the manifold.

information on whether the substrates are biodegradable.

Some of the possible process variables, e.g. BOD_5, are batch measurements, while others, e.g. DO concentration, use on-line probes, which are preferable for automation purposes. Though unsuitable for control, some of the measurements listed above are used when checking the effluent water quality.

Several factors make DO concentration measurements interesting. Reliable DO-probes for on-line measurements are commercially available. The DO concentration has a large impact on the biological conditions and on plant economy.

2.2 The Käppala plant

The Käppala plant serves about 500,000 people in the northern suburbs of Stockholm, Sweden. The dry weather flow rate is normally 1.5-2.5 m^3/s. The plant is divided into six lines (streams). In each line there is a primary clarifier, two aerators in parallel and a secondary clarifier. The aerators have the following dimensions, length 100 m, width 5 m and depth 6 m, making each aerator volume 3000 m^3. The influent liquid and the recycled sludge is shared between the aerator halves and their effluent is led to the common clarifier. The

influent liquid is step fed by manual adjustments into the aerator halves.

The liquid is oxygenated by a fine bubble diffused air system. The air flow rate is controlled by a throttle valve and the distribution is tapered along the aerator halves. The distribution between and along the two aerator halves cannot be automatically adjusted (see Fig. 2.1). The total air flow rate is measured by a differential pressure over a constriction (venturimeter). The measurement is linearized and fed back to an air flow controller. The dissolved oxygen (DO) concentrations in each aerator half are measured by a DO-probe located about 20 m from the tail end (see Fig 1.2).

An aerator divided into two parallel halves is not a typical process design. Since there is only one control input, the throttle valve, only one of the DO concentrations or their average value is controllable. Here only one of the aerator halves is controlled, the other will remain in open loop.

All six aerators receive air from the same manifold. The air is supplied by five centrifugal compressors in parallel, each giving 180 m^3/min at power consumption 220 kW when the discharge pressure is 1.65 bar and the suction pressure is 1.0 bar. Three of those are equipped with guide vanes allowing 15 % air flow rate reduction. The compressors have independent surge protection, which is activated at a too high pressure ratio. Further, they can be switched on and off remotely.

2.3 Overview of the aeration control at Käppala

The different control loops will be briefly described. Further, performance specifications and control system integrity will be discussed.

The DO concentration control loop is shown in Figure 2.2, where the major disturbances are indicated. The DO reference value, c_{ref}, is set by the operator. The throttle valve position, φ, is the primary control variable. The motivation for using selftuning control will be given in 3.4. The air flow through the throttle valve depends on both the header pressure and the valve position. This motivates the local air flow controller.

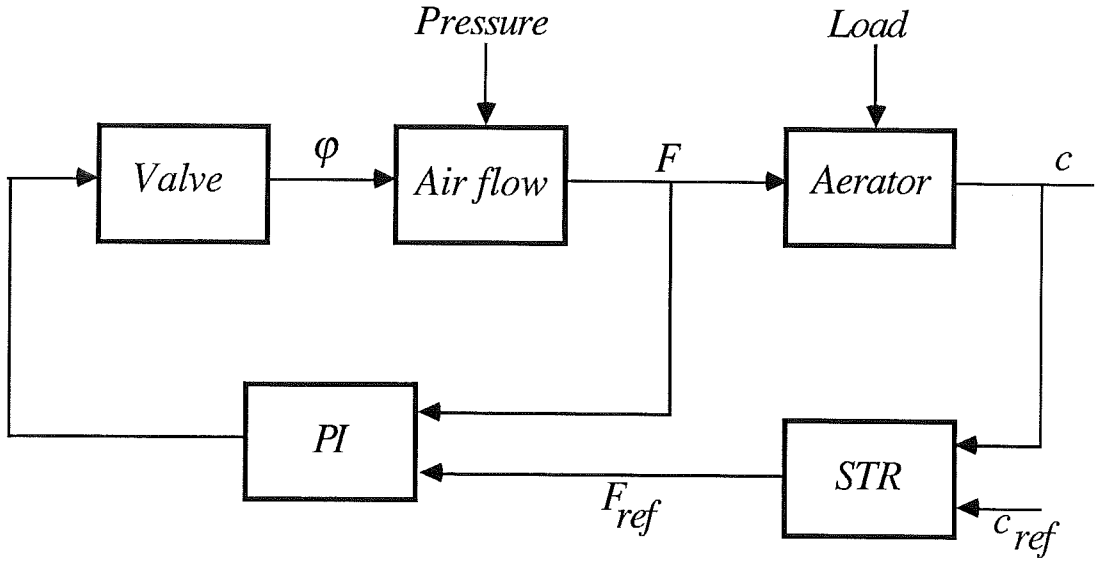

Figure 2.2 Block diagram of the DO concentration control loop.

The whole pressure control scheme includes both adjustment of guide vane positions, θ,and switching the blowers on and off. The guide vane positions are controlled by local controllers. Their setpoints, θ_{ref}, are given by the pressure controller. The pressure setpoint, p_{ref}, is computed by another loop, the pressure minimization loop. The goal of this loop is to maintain the most opened throttle valve close to 100 % open. For a constant number of blowers the pressure control loop is almost identical to the DO control loop (see Figure 2.3).

The control structure is illustrated in Figure 2.4. The control loops have different timescales (time constants) ranging from about 1 s (pressure loop) to 5 - 10 s (air flow rate loop) and 15 min (DO loop). Thus the multivariable control system is decoupled into single loops with weak interaction. Details on the air production control are given in Chapters 4 and 5.

The pressure controller, the switching program, the DO controllers and the pressure minimization loop are all implemented in an Asea Novatune. The guide vane and throttle valve controllers are Philips PCS-S2 with two 220 V AC stepping outputs each. The outputs are connected to the actuator motor, and either increase or decrease the actuator positions respectively. The controller approximates a PID controller. A similar controller is analysed in Åström (1981). For stability reasons, the controller needs a deadzone on the control error.

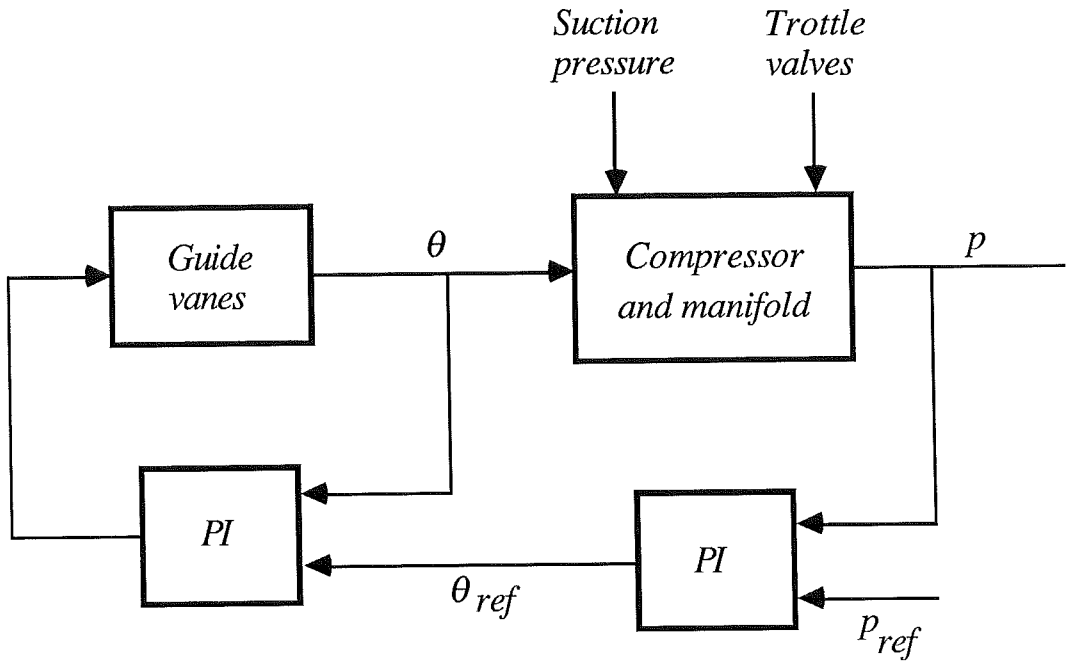

Figure 2.3 Block diagram of the pressure control loop.

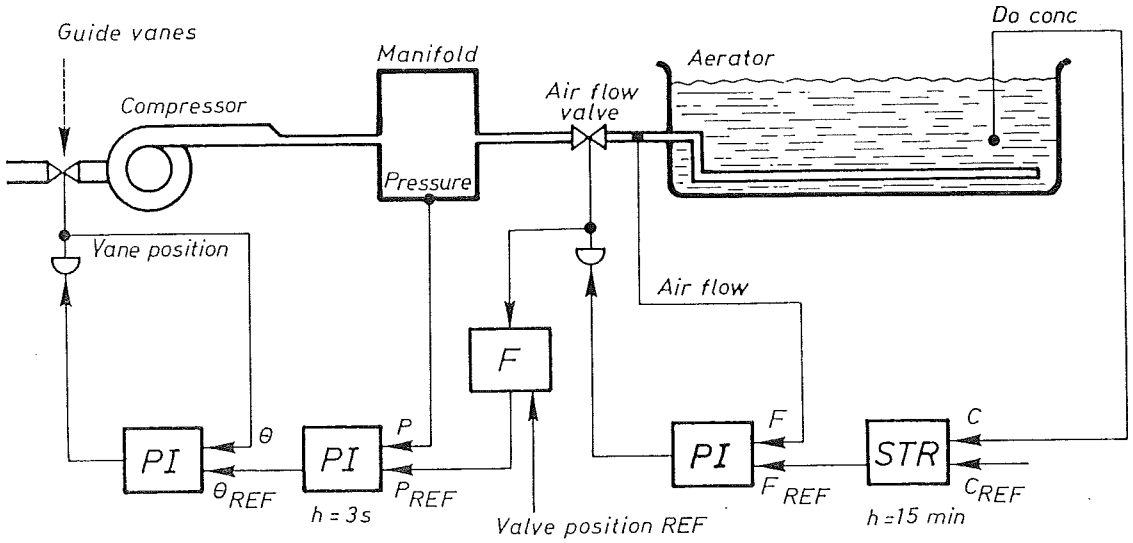

Figure 2.4 The control structure at Käppala.

Both guide vane controllers and air flow rate controllers are switched between manual and automatic operation by the operator. Controllers in closed loop can use either internal or external setpoints. In the latter case the setpoints are provided by the Novatune.

Performance specifications

The control loops shall attenuate the disturbances acting on the plant without excitation of high frequency dynamics. If the guide vanes or throttle valves are operated too quickly, air shock waves may propagate in the header, affecting the other control loops. This is prevented by limiting the bandwidths of the pressure and air flow rate loops. If the pressure loop is an order of magnitude faster than the air flow loops, it will easily compensate for an air flow change into one aerator. Then the other air flow loops will hardly be affected. The pressure minimization loop adjusts the pressure set point based on the throttle valve positions. To avoid upsetting pressure and air flow loops, it must work in a slower time scale than the air flow rate loops.

The DO concentration loop is not intended to increase the bandwidth of the DO dynamics. The main goal is attenuating the load disturbance acting on the aerator and give unit stationary gain in the closed loop. This requires integral action.

Since most of the control loops are cascaded, the outer loop using a digital controller and the inner loop using a standard local PID controller, the inner loops must be tuned to give a "good" response to input step changes. One method might be to give all inner loops a monotone step response. Since the local controllers have stepping outputs this is not always possible. In many cases they will instead give non-monotone step responses.

Although decoupling of the control system is is relatively easy to obtain, it may behave poorly under certain circumstances of control. This is demonstrated in the following Example.

> Example: Assume that several aerators have operational air flow rate control, but the header pressure is unregulated. If the air flow rate setpoint of one aerator is increased, the controller will open up the throttle valve and use a larger portion of the available air flow, thus reducing the header pressure and the flow into the other aerators. Their air flow rate controllers will cause their throttle valves to open up, further increasing the header pressure drop. Conversely a reduced flow into one aerator can produce a pressure rise which might activate the surge protection mechanisms of one or more blowers. □

During manual operation of the plant, the assumptions in the Example are fulfilled, but the air flow rate setpoints are not changed by the operator without supervision of the pressure.

For the control loops implemented in the Novatune, it is however crucial that pressure control is operating. If not, the other loops must be switched off. Pressure control requires operational guide vane controllers. DO control requires operational air flow rate controllers and pressure control. The pressure minimization loop requires both pressure and air flow control, but the air flow rate setpoints may be either internal or external. The DO loop works well without the pressure minimization loop, as long as the pressure is sufficiently high to produce the required air flow.

3. Dissolved oxygen control

In this chapter the dissolved oxygen (DO) control will be discussed. In Sections 3.1 - 3.4 the motives for control are given, and in Section 3.5 the control implementation is demonstrated and evaluated. Water quality results are summarized in Olsson et al (1985). The air production control is assumed to be available and will later be presented in Chapters 4 and 5.

3.1 The importance of DO concentration as a process variable

The purpose of the activated sludge process is the degradation of biological waste into carbon dioxide and water in an aerobic process. The biochemical reactions involved demand oxygen, which is why an air supply is crucial for maintaining aerobic conditions in the reactor.

The concentration of dissolved oxygen effects the process in several ways. First, the oxygen level determines which type of bacteria will dominate in the reactor. At low levels filamentous bacteria will dominate, at higher levels zoogleal bacteria take over. The type of bacteria affects the flocculation and settling properties of the sludge. Second, the metabolism of the bacteria is independent of the DO concentration above a certain limit. Lower concentrations limit the metabolism, while high oxygen supply requires unnecessary energy.

The air flow is often used for agitation of the liquid. To give sufficient agitation there is usually a minimum air flow specified for each plant. Thus the DO concentration must be kept at a low but sufficient level, meeting the demands of metabolism and agitation. Interesting enough, little is known about how long term constant DO concentration affects the floccing properties of the sludge.

3.2 Dissolved Oxygen Dynamics

In the past decade much effort has been used in developing dynamic models for activated sludge systems. The earlier steady-state models proved inaccurate for control purposes, but were to some extent sufficient for plant design. An overview of dynamic models is presented in e.g. Dold et al (1980), Stenstrom and Andrews (1979) or Olsson and Andrews (1978). The models incorporate DO, substrate and organism dynamics as well as hydraulics and other transport phenomena. In this section both a point model and a partial differential equation for the DO dynamics will be presented. Stationary solutions to the partial differential equation will be considered. Finally DO probe location and neglected dynamics will be discussed.

The DO dynamics of a complete mix model (well stirred tank) is described by

$$\frac{dc}{dt} = \frac{Q}{V}\left[c_{in} - (1 + r)c\right] + k_L a\left[c_s - c\right] - R \qquad (3.2.1)$$

where c is the dissolved oxygen concentration, c_{in} the influent oxygen concentration, Q the influent flow rate, V the aerator volume, r the return sludge flow coefficient, c_s the oxygen saturation concentration, $k_L a$ the oxygen transfer rate and R the respiration rate or consumption of oxygen.

The saturation value of oxygen concentration, c_s, is a function of oxygen partial pressure in the surrounding atmosphere, temperature, salinity and concentration of surfactants in the liquid. The oxygen transfer rate coefficient, $k_L a$, is a function of aerator type and geometry, air flow rate, etc. It depends approximately on the air flow F rate as

$$k_L a = a_1 \cdot F + a_2 \qquad (3.2.2)$$

Respiration is a function of dissolved oxygen, substrate and organism concentrations. The respiration is limited by small DO concentrations, and is often modelled as a Monod expression

$$R = \frac{c}{k + c} \cdot R_1 \qquad (3.2.3)$$

where $k > 0$ and R_1 are independent of c. For larger DO concentrations the oxygen transfer dominates the dynamics of the DO concentration.

A more general hydraulic description of the aerator is the dispersed plug flow model (see Olsson and Andrews (1978)), described by the partial differential equation

$$\frac{\partial c}{\partial t} = E \frac{\partial^2 c}{\partial z^2} - v \frac{\partial c}{\partial z} + k_L a \left[c_s - c\right] - R \qquad (3.2.4)$$

where z, $0 \leq z \leq 1$, is a dimensionless spatial coordinate along the length of the aerator, $c = c(z,t)$, $R = R(z,t)$, $k_L a = k_L a(z,t)$, v the stream velocity and E the dispersion coefficient. Similar equations hold for substrate and organism concentrations, etc. Notice that transversal dispersion is neglected in (3.2.4). Setting $E = 0$ corresponds to a plug flow model and the complete mix model is obtained when $E \rightarrow \infty$ and where $(\partial c/\partial z)$, $(\partial R/\partial z)$ and $(\partial k_L a/\partial z) \rightarrow 0$, simultaneously. The dispersed plug flow model is often approximated by several complete mix models in series.

The flow conditions may vary in the aerator, e.g. high dispersion close to the inlet and almost plug flow at the outlet. The oxygen transfer rate $k_L a$ is affected by the air distribution along the aerator. The respiration decreases towards the outlet since the substrate concentration decreases.

The steady-state solution of (3.2.4) and the similar equations for substrate and organism concentrations, have been computed by Olsson and Andrews (1978) for some cases with constant uniform air flow distribution and $E = 0$, with either different inlet substrate concentrations and constant influent flow rate or different influent flow rates and constant inlet substrate concentration. The steady-state solutions of (3.2.4) for these cases are shown in Fig. 3.1. The position of maximum slope and its value indicates the load conditions and the degree of completion of the biochemical reactions (see Olsson and Andrews (1978)). Using non-uniform air flow distribution, the DO profile will have a different shape.

In the first half of the aerator, the DO concentration profile is not very sensitive to variations in aerator load. In the later half however, the shape of the DO profile varies markedly with aerator load; therefore DO probes are usually located in this part of the aerator.

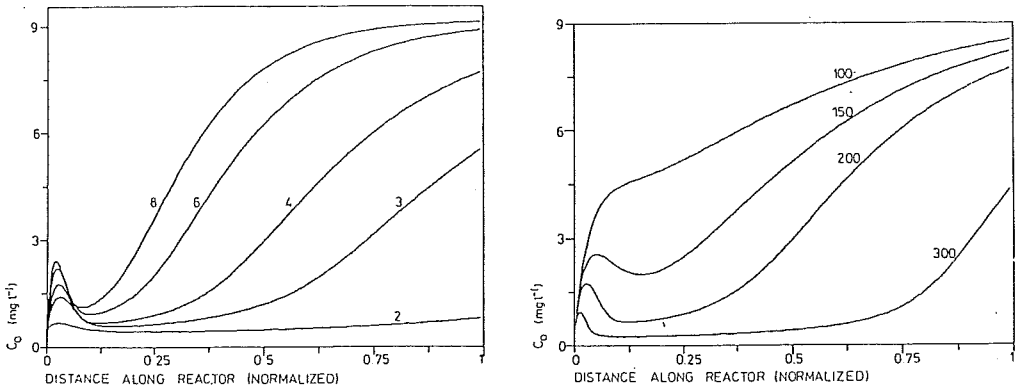

Figure 3.1 DO profiles in a plug flow aerator with uniform air flow distribution. To the left different retention times (in hours) with influent substrate concentration 200 mg/l. To the right different influent substrate concentrations (in mg/l) with retention time 4 h. From Olsson and Andrews (1978) with permission.

Before deciding the DO probe location, the dynamic DO response from air flow changes must be considered. If the DO probe is located in a region with aeration, then the dynamics is first order (see (3.2.1) or Appendix). Note however that this model assumes immediate transversal dispersion. It does not take several phenomena into account, such as the air flow dynamics, the local stirring due to the air bubbles and the transportation delay of the liquid from the diffusor to the DO probe. This extra dynamics, which is dominated by stirring and transportation, gives a small response during the first minutes after an air flow rate change. Thus a reasonable model is a time delay of a few minutes followed by a first order response.

If the DO probe is located in a region without diffusors, then the response in DO concentration from air flow rate changes is further delayed, since the liquid must be transported along the length of the aerator as well as transversally. If the dispersion E is negligible, the extra delay can be estimated as $\Delta z/v$, where Δz is the relative distance between the diffusors and the probe location, and v is the stream velocity in (3.2.4), Such time delays can be in the order of 10 minutes.

Thus, irrespective of the DO probe location, the response in DO concentration from air flow rate can be described approximately by a first order model and a time delay. To get as short delay as possible, the DO probe must be located in a region with aeration. The delay must be considered when implementing a control system. Relying on the first order model only, may give poor performance.

The main disturbances to the activated sludge process are changes in influent flow rate and substrate concentrations. Both disturbances affect the respiration rate. Since oxygen transfer is the dominating part of the DO dynamics, the influence from changes in the influent flow rate on the process time constant is negligible. The change in respiration rate is not observable until after a certain transportation delay from the inlet of the aerator to the DO probe. Meanwhile the DO profile along the reactor changes.

At the Käppala plant air flow changes settle within 10 - 30 s. The DO concentration has a settling time in the range of 30 - 50 minutes. During the first 5 minutes a DO concentration step response does not look to be first order. For larger time horizons a first order model with a time constant of about 15 minutes is an adequate description of the DO dynamics.

3.3 Earlier dissolved oxygen control strategies

The traditional ways of controlling the DO concentration are manual control, analog PID control and, during the past decade, digital PID control. These strategies generally use an air flow rate control loop.

Manual DO control is not at all trivial. The slow and partly random load changes combined with a slow process dynamics, makes it difficult for a human operator to predict the future DO concentration. Further, the air flow rate is normally adjusted only some 2-4 times every day, giving wide fluctuations in DO concentration and excessive aeration. It is often observed that manual air flow rate adjustments are made in the wrong direction (see Wells (1979)).

Process dead-time and measurement noise may make automatic control difficult. In some plants both air flow dynamics and probe location create large dead-times. Wells (1979) reports a 10 minute dead-time at Fairfield California Regional WWTP. Further, some DO probes give a special type of noise, called pop-corn noise (see Wells (1979)), induced by air bubbles in the aerator. This is normally not observed at Käppala, but if the DO probe membrane ruptures, the noise level increases.

Consequently, an analog PI controller, where the control output is setpoint for the air flow rate loop, may be difficult to use. To handle pop-corn noise, the controller gain must be low. The DO signal can also be filtered before it is used in the controller. Irrespective of noise problems, a full scale process demands a reset time in the order of 15 minutes. This is difficult to achieve using analog electronic components.

Digital PID control with dead-time compensation has been used by e.g. Wells (1979) and Olsson and Hansson (1976). This can be used in any time-scale in a digital computer. In Wells (1979), pop-corn noise was first filtered by a first order analog filter with time constant 12 s, and after sampling it was filtered by a first order digital filter with time constant 30 s. Then a reset time of 800 s, and a 10 minute dead-time compensation was used in the control algorithm. A DO standard deviation of 0.3 mg/l in closed loop is reported. Olsson and Hansson (1976) designed their controller based on identification experiments at the Käppala plant.

Flanagan et al (1977) also uses feedforward with dead-time compensation from measurements of the respiration rate in the influent liquid. Another feedforward signal, used by some authors, is the influent flow rate, but this requires sufficient correlation between the flow rate and influent substrate concentration. This is however not always the case.

Wells (1979) and Flanagan et al (1977) both report energy savings of about 20 % from DO control, and Holmström (1979), reports 10-40 % in a survey article on Swedish WWT plants. The savings obtained depend on how well the manual control worked. Flanagan et al (1977) use constant header pressure, and Wells (1979) uses no pressure control at all. Instead Wells (1979) only reports the air flow demand savings, stating how much energy would be saved if pressure control was used. Tyler (1985) uses variable header pressure, but gives no indication of the energy savings magnitude. The impact of variable pressure will be analysed Section in 4.4.

3.4 Motives for self-tuning DO control

The time-varying discrete time process model, is the strongest reason for using a self-tuning controller. Further, a self-tuning controller offers possibilities for feedforward and dead-time compensation, where the sensitivity to model errors are removed by the adatation. Furthermore, the long process time constant and the random load disturbances make manual tuning difficult and tedious. Self-tuning controllers are discussed extensively in Åström (1983). First discrete time DO models are presented and discussed. Earlier work on self-tuning DO control will be discussed. The applicability of self-tuning PID regulators for DO control is also considered.

A difference equation for the DO concentration is derived in the Appendix. First (3.2.4) is spatially discretized mode, and then the air flow and respiration rates are assumed constant during a sampling interval [t, t+h]. Then the DO concentration at time t+h is given by

$$c(t+h) = a(F,h)\cdot c(t) + b(F,h)\cdot F(t) - r(F,h)\cdot R(t) \qquad (3.4.1)$$

where a, b and r are nonlinear functions of the air flow rate F, the sampling interval h and other coefficients of the continuous time model (see Appendix). Several factors in the process are affected by temperature and pH, such as the respiration rate and the oxygen saturation concentration. Thus (3.4.1) is both time-varying and nonlinear.

From (3.4.1) the pulse transfer function $H(q^{-1})$ from air flow rate to DO concentration can be obtained, where

$$H(q^{-1}) = \frac{b\, q^{-1}}{1 - a\, q^{-1}} \qquad (3.4.2)$$

the coefficients vary too fast, the transfer function does however not make sense. The first order models (3.4.1-2) are valid only for long sampling intervals, since the transversal transportation delay has been neglected (see 3.2). At Käppala, sampling intervals less than 8 - 10 minutes must be regarded as inadequate, if the first order model is used.

The possibility of using feedforward and dead-time compensation, is useful in plants which have higher order DO dynamics, e.g second or third order, where the initial response is relatively small. This may be due to an unideal DO probe location, according to the discussion in Section 3.2. In such cases the simplest process modell is a delayed first order transfer function. By using a carefully selected feedforward signal, the load variations can be compensated for earlier, and the standard deviation of the DO concentration can be further reduced.

Feedforward from the respiration rate in influent liquid (RRML) and the influent flow rate has already been used by some authors. Other possible signals are the total organic carbon (TOC) and pH in the influent stream.

A number of papers on self-tuning control of the dissolved oxygen concentration have been published. Most of these contain only simulation studies. Goodwin et al (1982) uses a simple nonlinear process model and a data vector with nonlinear components to take the process nonlinearities into account. Convergence is proven for the algorithm. Quite a few assumptions of uniformity in the aerator are assumed. Some of these are not consistent with the real process, such as the assumption of constant respiration rate, in spite of varying influent flow rate. Integral action is obtained by estimating the respiration rate as a parameter (a bias in the difference equation). Since the respiration is never constant in real plants, and should not be in their model either, they would need e.g. a variable forgetting factor to handle respiration variations properly. A variable forgetting factor is however not consistent with convergence. Thus their algorithm cannot be directly applied to the real process.

Yust and Howell (1986) has reported self-tuning DO control of a pilot plant aerator. Self-tuning algorithms using nonlinear data vectors have been proposed by several authors, e.g. Dochain and Bastin (1984), considering bacterial growth systems, Svoronos et al (1981), considering bilinear systems, Agarwal and Seborg (1985) and Isermann and Kofahl (1985).

The drawback with standard PID controllers, is that the control law has constant coefficients. The controller must be tuned for the worst case, which of course is unknown. Thus the performance must be checked several times to make sure process variations can be handled. Today, however, PID controllers can be automatically tuned. One such controller is the Autotuner, invented by Åström and Hägglund (1984), and commercially available from SATT Control Instruments.

The Autotuner requires a (push-button) tune command. Consequently it requires a simple but still manual intervention when the process dynamics has changed too much. It then initiates a small oscillation in the process, which is used to compute new PID parameters.

Another automatically tuned PID controller is the Foxboro Exact controller (see Foxboro (1984)). The Exact controller supervises the process input and output, and when natural disturbances excite the dynamics, new parameters are computed. The Exact controller does not initiate any oscillations or other disturbances and it does not require manual intervention in order to retune the parameters.

At the start of this work, no self-tuning PID controllers were commercially available, but they would probably not be the best choice today either. Despite their tuning facility, they are still digital PID controllers, approximating the earlier analog controllers by using a short sampling interval, and then the process cannot be regarded as first order. Consequently, a PID controller is not appropriate for handling the approximate dead-time in the DO response.

A pure discrete time approach, e.g a self-tuning controller using a long sampling interval, is a better choice. A superior method of achieving integral action will be used. Further, the parameter variations are not too fast to be handled by the adaptation, using a linear data vector. Thus a nonlinear data vector has not been regarded necessary in this work.

3.5 Implementation of self-tuning DO concentration control

The control structure implemented has been discussed in Section 2.3, and shown in Figure 2.2. Since the time scale for the air flow rate loop is much shorter than for the DO dynamics, the air flow dynamics can be neglected when analyzing and implementing the DO control. Due to varying header pressure, DO control requires operational air flow rate control. General information on the Asea Novatune self-tuning controller is given in the Appendix (see also Asea Novatune documents (1984)) and self-tuning control is treated in Åström (1983).

First two adaptive control laws will be given, one with and the other without integral action. Then it will be demonstrated that the control law without integral action is inappropriate for a process with load disturbance. The integrating control law will however be satisfactory, and the convergence of the parameters will be discussed. Finally the implementation is presented and evaluated.

Since the discrete time transfer function (3.4.2) from the air flow rate to the DO concentration does not include any time delay, the closed loop transfer function can be chosen as

$$H_m(q^{-1}) = \frac{(1 - p)\, q^{-1}}{1 - p\, q^{-1}} \tag{3.5.1}$$

where p is the closed loop pole, and H_m has unit stationary gain. For a first order process without time delay the controller polynomials $\hat{R}$ and $\hat{S}$ in the Novatune self-tuning controller, should both be of degree zero (see Appendix). Thus the control law without integral action is

$$\hat{r}_0 u(t) = - \hat{s}_0 y(t) + (1-p)\, u_c(t) \tag{3.5.2}$$

and the control law with integral action is

$$\hat{r}_0 \Delta u(t) = - \hat{s}_0 \Delta y(t) + (1-p)\, \left[u_c(t) - y(t)\right] \tag{3.5.3}$$

where $\Delta = (1 - q^{-1})$, u is the control signal (air flow rate setpoint), y the process output (DO concentration) and u_c the (DO) setpoint. $\hat{r}_0$ and $\hat{s}_0$ are the estimated parameters. In case the parameters are constant, they are denoted r_0 and s_0 respectively. If $\hat{r}_0 = b$, in both cases, and $\hat{s}_0 = a - p$ for (3.5.2), or $\hat{s}_0 = a$ for (3.5.3), the desired closed loop is obtained for both control laws. If $p = 0$, the controllers may converge to minimum variance control laws.

This method of introducing integral action in self-tuning controllers, i.e. (3.5.3) or more generally (A.19), has been analysed by Tuffs and Clarke (1985) in the white noise case, and by Rundqwist (1985) for coloured noise. The special way of handling the feedback signal y(t), i.e. both taking differences $\Delta y(t)$ and computing the control error $u_c - y$, guarantees that the integral action will not be lost for finite values of $\hat{s}_0$, and the loop will always have unit stationary gain.

Equation (3.5.3) is also a PI control law, where the setpoint is fed only to the integrator. The corresponding PI parameters are

$$K = \frac{\hat{s}_0}{\hat{r}_0} \qquad T_i = \frac{h \cdot \hat{s}_0}{1 - p}$$

where h is the sampling interval.

Analysis of the self-tuning control laws

A first order process model with (varying) load disturbance is presented. It is demonstrated that (3.5.2) is a poor control law for this process, while (3.5.3) may converge to a minimum variance control law. General results are stated in Rundqwist (1985), while this section will only treat the first order case.

The process model (3.4.1) can be written

$$(1 - a\,q^{-1})y(t) = b\,q^{-1}u(t) + v(t) \qquad (3.5.4)$$

where y(t) is the process output, u(t) the control signal and v(t) is a load disturbance (in this case the respiration). The load disturbance is modelled as

$$v(t) = \frac{C(q^{-1})}{1 - q^{-1}}\,e(t) = \frac{1 - c\,q^{-1}}{1 - q^{-1}}\,e(t) \qquad (3.5.5)$$

where e(t) is zero mean white noise with variance σ^2. Thus the load v(t) is modelled as integrated noise, which is a non-stationary stochastic process.

If a non-integrating constant control law, i.e. (3.5.2) using constant parameters r_0 and s_0, is attempted on the process (3.5.4-5), then the closed loop has infinite variance. This structure is unable to cancel the integrator in (3.5.5), unless the controller gain s_0/r_0 is infinite, and then the closed loop is unstable. The stability limit is $s_0/r_0 < (1+a)/b$.

In the adaptive case, with forgetting factor $\lambda < 1$, the controller gain $\hat{s}_0/\hat{r}_0$ repeatedly increases above the time-invariant stability limit (1+a)/b. When the gain is larger than this limit, the signals start growing and good adaptation is obtained. Then the gain decreases below the limit, but soon it starts growing again (see Fig. 3.2). The growing gain is due to the fact that infinite gain is required to

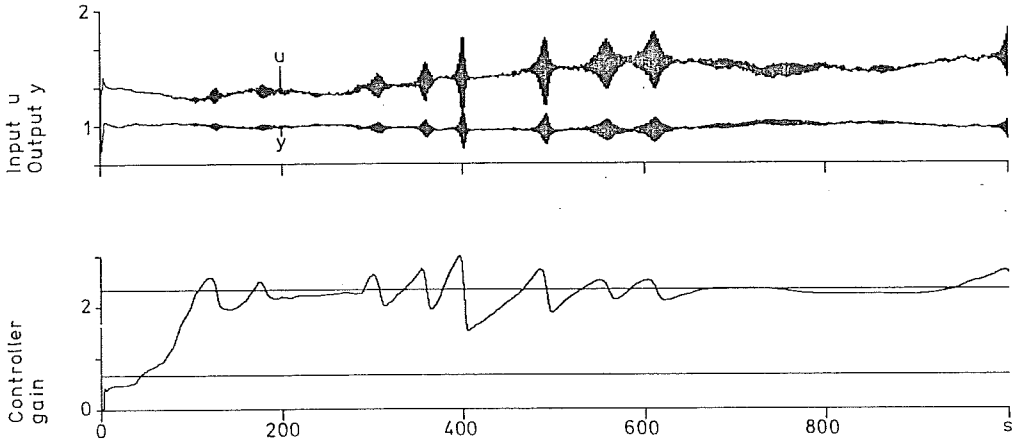

Figure 3.2 Simulation of the process (3.5.4-5) and the control law (3.5.2) with forgetting factor λ = 0.998. The parameters are a = 0.4, b = 0.6 and p = 0. The controller gain, $\hat{s}_0/\hat{r}_0$, the nominal gain, 2/3, and the time-invariant stability limit, 7/3/, are shown in the lower part.

required to attenuate the load disturbance in stationarity. Note however that this particular solution to the non-linear system is stable in the sense that all signals are bounded, but the performance is considered poor.

Using the integrating control law (3.5.3) the closed loop will be stable, and the integrator in the load disturbance is cancelled. In Rundqwist (1985) it is shown that for a process with a load disturbance modelled by (3.5.4-5) then the integrating controller (3.5.3) may converge to the minimum variance controller if p = 0 and the forgetting factor λ = 1, where

$$\hat{r}_0 = \alpha\, b \qquad \hat{s}_0 = \alpha\, a \qquad \alpha = \frac{1}{C(1)} = \frac{1}{1 - c} \tag{3.5.6}$$

Thus $\hat{r}_0$ and $\hat{s}_0$ will approach b and a respectively, only if the disturbance is integrated white noise. If the disturbance is integrated coloured noise, the parameters will be biased, but nevertheless, minimum variance control is obtained. The convergence rate depends on c. It is slower for c > 0, and faster for c < 0, which has been verified by simulations.

The convergence results above are only valid if the forgetting factor λ = 1. If λ < 1 the adaptation gain $P(t)\varphi(t)$ in (A.24-25) does not decrease to zero. Thus neither the controller parameters nor the covariance matrix P will converge to constant values. A conjecture is that the parameters converge to stochastic variables,

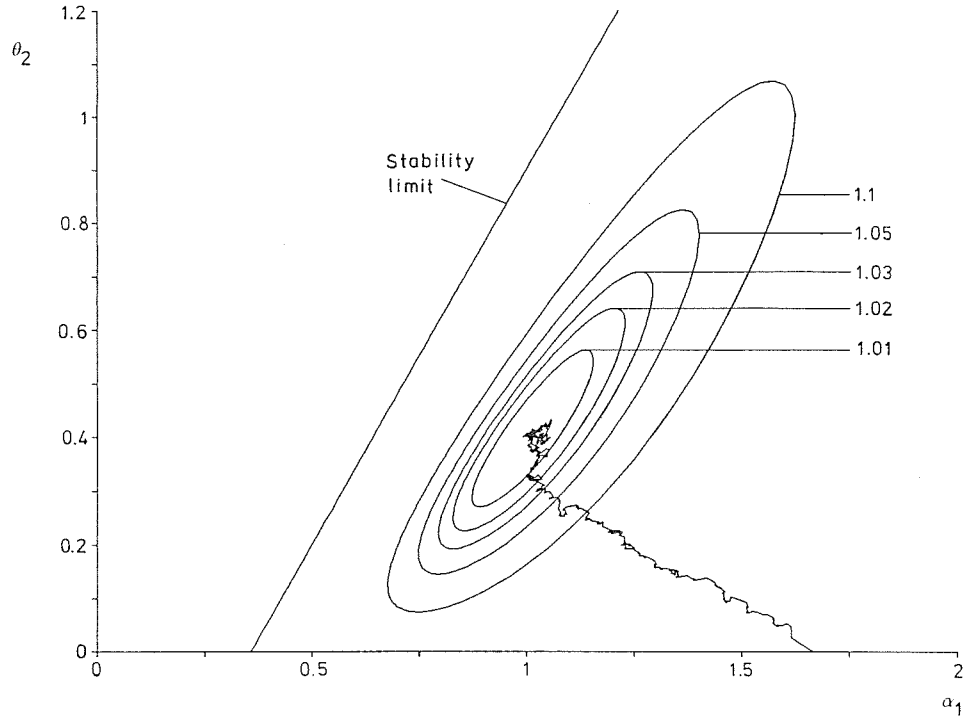

Figure 3.3 Contour plot for the relative closed loop variance V/σ^2 of process (3.5.4-5) and the control law (3.5.3) using a = 0.4, b = 0.6, c = p = 0 and $\sigma^2 = 10^{-4}$. $\alpha_1 = r_0/b$ and $\theta_2 = s_0$. The parameter estimates from Fig. 3.4 are also plotted.

whose expectations are the minimum variance solution, and with reasonably low variances.

For constant parameters the output variance of the process (3.5.4-5), with C = 1, and the control law (3.5.3), is given by

$$V = \frac{\alpha_1^2\left[\theta_2 - a\alpha_1 - \alpha_1\right]\sigma^2}{\left[\theta_2 - a\alpha_1 + \alpha_1\right]\left[2\theta_2 - 2a\alpha_1 - 2\alpha_1 + 1\right]} \qquad (3.5.7)$$

where $\alpha_1 = r_0/b$ and $\theta_2 = s_0$. In Fig. 3.3 a contour plot of the realitive variance V/σ^2 is shown, using a = 0.4, b = 0.6 and $\sigma^2 = 1$. The minimum is very flat. Calculations show that if the parameters deviate ± 5 % from their correct values, the variance increases less than 1.5 %. If they deviate ± 10 %, the variance increases less than 6 %. This increase in variance will hardly be noticed in the output. The simulation in Fig. 3.4, using $\sigma^2 = 10^{-4}$, verifies this conclusion.

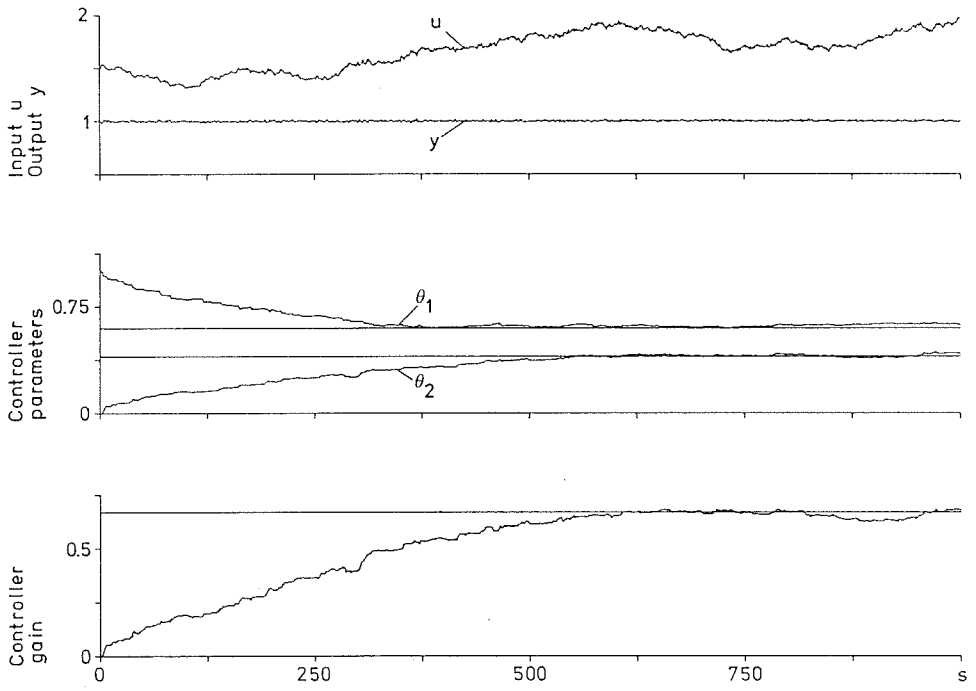

Figure 3.4 Simulations of the process (3.5.4-5) and the control law (3.5.3), using forgetting factor λ = 0.998 and the parameters specified in Fig 3.3.

When comparing the performance of the two control laws (3.5.2) and (3.5.3) it may be argued that due to the load disturbance, the process (3.5.4-5) really is second order. Thus a control law (A.17) with $\deg(\hat{R}) = \deg(\hat{S}) = 1$ would do the job. In the white noise case, the desired closed loop is obtained if $\hat{r}_0 = -\hat{r}_1 = b$, $\hat{s}_0 = a-p$ and $\hat{s}_1 = a$. The differences are that (3.5.3) only requires 2 parameters, not 4, and that (3.5.3) always has unit stationary gain, irrespective of the parameter values, provided the closed loop is stable.

Implementation of self-tuning DO control at Käppala

There are several implementation aspects to consider, such as signal scaling, selection of sampling interval and alias problems. The resulting long sampling interval, 15 minutes, requires special start-up precations in order to ensure both bumpless and faster transitions to automatic mode. The DO signals can change rapidly during certain conditions. Such rapid changes must not influence the the air production system in any severe manner.

At Käppala the air flows are in the range of 45 - 160 m^3/min and DO concentrations in the range of 0 - 10 mg/l. The control signal is internally rescaled into the range 0.55 - 1.6, i.e. approximately in the same range as the DO signal. For stability reasons, (see Egardt (1980)), the scaling must be chosen such that $\beta_0 > b/2$, where β_0 is the initial value of $\hat{r}_0$ in (3.5.3) and b is the numerator coefficient in (3.4.2). In the Novatune self-tuning controller, β_0 is always 1, and therefore improper scaling may give an unstable loop. It is of course possible to use an internal representation in the same range for all signals.

From the discussion in Section 3.4 it is clear that in order to use the control law (3.5.3), based on a first order process model, (3.4.2), the sampling interval must be fairly large. In the first approach at Käppala, the sampling interval was 10 minutes and the closed loop pole placed in the origin, i.e. p = 0. This implies a solution time of 10 minutes, which corresponds to a closed loop bandwidth at higher than desired frequencies, which resulted in an oscillating control signal and process output in our tests at Käppala. The periods of the oscillations are mostly 35 - 50 minutes, but sometimes shorter or longer periods dominate.

The sampling interval was subsequently changed to 12 minutes, and later 15 minutes was tried. Finally the pole was chosen as 0.4, i.e. p = 0.4 in (3.5.3), and then the oscillations seemed to have dissappeared from the process. This sampling interval and closed loop pole location correspond to a solution time of 50 minutes, i.e. a considerable reduction in bandwidth. This solution time is the same magnitude as the open loop response time. If a minimum variance control law is desired, i.e. p = 0 in (3.5.3), the sampling interval must be further increased.

To ensure bumpless transitions from manual to automatic DO control the self-tuning controller updates setpoint, feedback signal and external control signal (air flow rate controller setpoint) at every sampling instant in manual mode. When the air flow rate controller is switched to 'Automatic and External' mode, setpoints are taken from the Novatune. To ensure bumpless transfer, this setpoint must however be updated with a shorter sampling interval than 15 minutes. One solution is illustrated in Figure 3.5. In manual mode the external control signal is fed directly to the DA-converter, using a sufficiently short sampling interval, but is still sampled by the self-tuning controller. When the air flow rate controller is switched to 'Automatic and External' mode, the by-passed signal is held constant, by switching switch 1 to the upper position. At the first sampling instant for the self-tuning controller, it is still held in manual mode to ensure updating of the

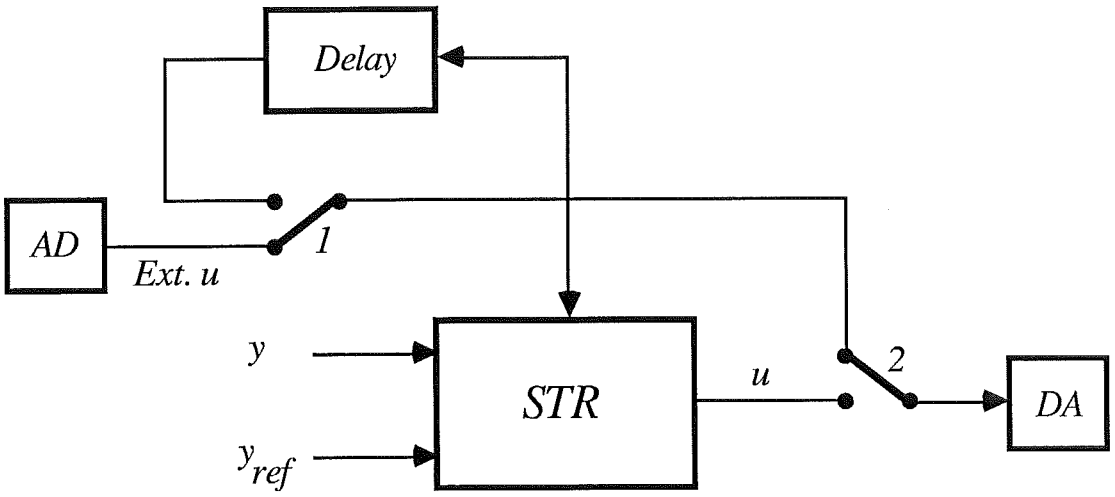

Figure 3.5 Block diagram describing mode transitions. The switch positions indicate manual mode. The Delay and the AD and DA converters have short sampling intervals while the selftuner has a longer sampling interval.

external control signal. Then switch 2 is switched to the lower position and the loop is closed. The transition to manual mode is immediate.

Further, the self-tuning controller is scheduled by a real-time clock. Unless precautions are taken, the first control signal may not be computed until after 30 minutes, i.e. 2 sampling intervals after the air flow rate controller is switched to 'Automatic and External' mode. It is however possible to make the self-tuner use one sampling interval in open loop and an integer multiple k of this sampling interval in closed loop. Using the short sampling interval, the algorithm checks the operating mode. If the mode is manual, signals are updated, and if the mode is automatic, a counter is updated and tested. Every k:th sampling instant the control algorithm is executed. Because of this difference in sampling interval, however, inappropriate data is collected by the self-tuner in manual mode. To avoid problems, no the adaptation should take place in automatic mode until data has been collected using a correct sampling interval.

To solve the problem of fast and bumpless transfer to automatic mode at Käppala, the external control signal is updated once per second by the AD converter. The open loop sampling interval for the self-tuning controller is 1 minute, and the closed loop sampling interval is 15 minutes. Thus the loop is closed within 1 - 2

minutes, and the external setpoint to the air flow rate controller, from the DA converter, is updated once per second in manual mode.

Fast changes in the DO concentration can give disasterous results if not handled properly. Normal load changes to the activated sludge process give slow changes in the DO concentration. Fast changes indicate some type of malfunction, e.g calibration or cleaning of the DO probe, or toxic input to the plant. So far no precautions against fast changes in DO concentration has been included in the control system. Possible solutions are discussed below.

When the DO probe is lifted out of the liquid, e.g. for cleaning or calibration, its output signal first becomes maximum. Thus it is easy to detect this event with a simple test. During cleaning or calibration, the output may change all over the measurement range. It is consequently difficult to make a robust test, indicating that 'normal' measurements are received again. A proper action is perhaps to freeze the control output until some manual action has been taken.

If the plant receives toxic compounds, the DO concentration may increase or decrease quickly. If the toxic compounds kill or hibernate the bacteria, the DO concentration increases, and if the compounds are highly oxidizing they consume almost all the available oxygen. Such DO concentration changes can be larger than 2 mg/l during 10 minutes in either direction. Normally the changes in air flow rate setpoints are rather uncorrelated, but when toxic compounds arrive, all 6 aerators almost simultaneously demand a large change in air flow. To avoid upsetting the air production system, changes in the air flow rate setpoints must be kept small for a while. Then the DO controllers will slowly catch up the air flow demand and restore the DO concentration to the setpoint. When the control error is sufficiently small the restrictions are not necessary.

When sampling continuous time signals, it is often necessary to reject high frequency components by analog filters (see Åström and Wittenmark (1984)). Else aliasing of high frequencies may take place. However, except for 10 ms RC-filters on the inputs of the AD-converters, no anti-aliasing precautions have been taken. These filters are obviously insufficient for such a low sampling frequency as $1/15\ \text{min}^{-1}$. The signals have been checked by means of an oscilloscope and no hum of significant level was found. Further, the signals received are current loops 0 - 20 mA, which are converted to 0 - 10 V DC by a 500 Ω resistance parallel to the AD-converter input. Such loops are insensitive to disturbances due

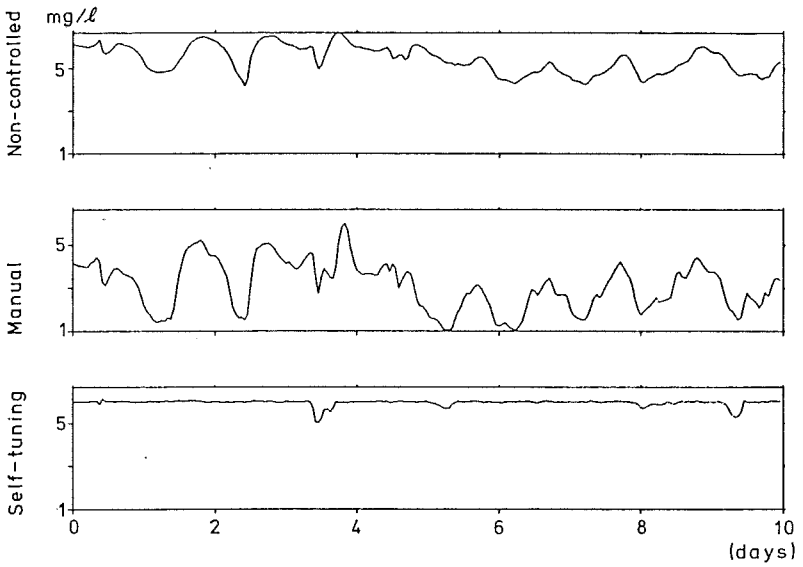

Figure 3.6 DO concentrations in the aerators L1, L2 and L3 during the test period Jan 19-28, 1984.

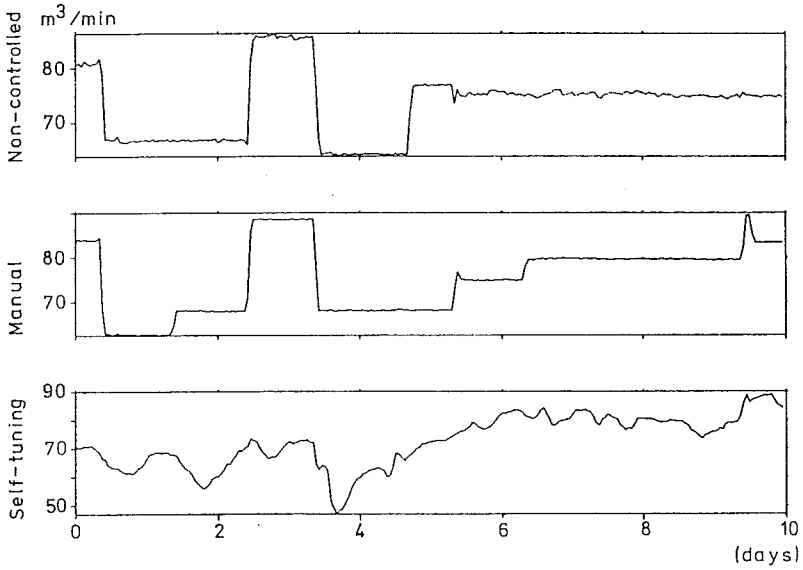

Figure 3.7 Air flow rates to the aerators L1, L2 and L3 during the test period Jan 19-28, 1984.

to the low input impedance. The situation is different if voltage signals are used, since then the input impedance is about 1 MΩ, and small induced currents give a high voltage at the AD-converter input.

Evaluation of self-tuning DO control

The performance will be evaluated from a purely control point of view. Energy savings will be discussed in Chapter 4.

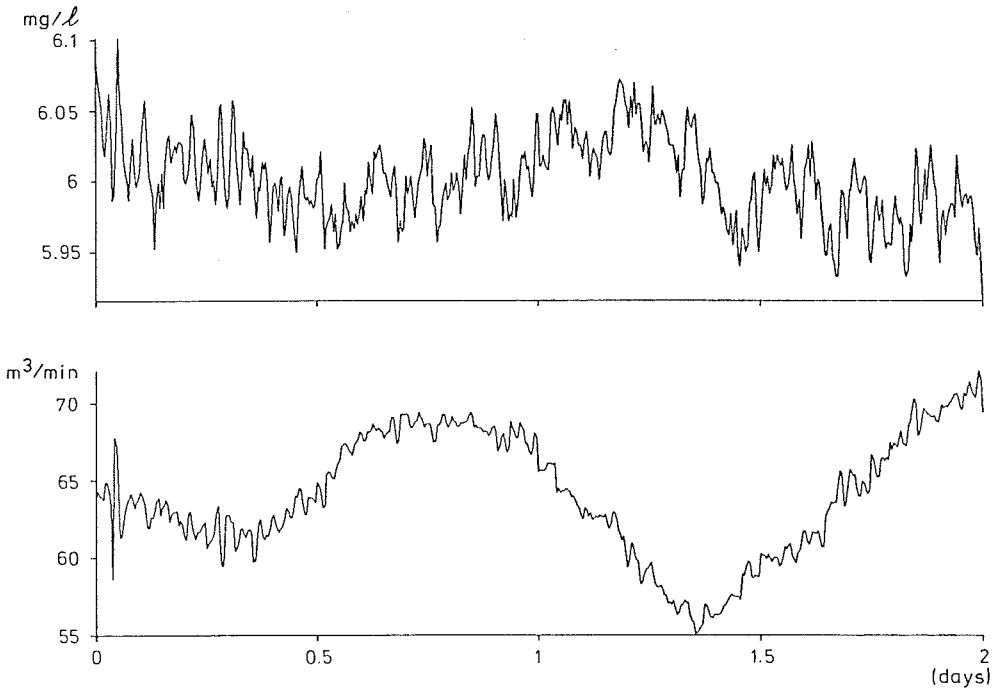

Figure 3.8 DO and air flow rate during self-tuning control with sampling interval 15 minutes and pole location 0.4.

During January and February 1984, the water quality was monitored during self-tuning DO control, using the sampling interval 15 minutes and the closed loop pole 0.4. In Figures 3.6-7 the air flow rates and the DO concentrations from three aerators during a ten day test period in January 1984 are shown. The variables are logged every 6 minutes, making 2400 data points for each signal. The first aerator (L1) was unregulated, the second aerator (L2) was controlled manually according to normal operating practice, and the third aerator (L3) was controlled automatically by the Novatune. The differences in DO concentration variations are significant. In the table below the average values and standard deviations of the air flow rates and DO concentrations are shown:

Aerator	Air flow rate (m^3/min)	DO conc. (mg/l)
L1	73.2±6.0	5.4±0.6
L2	75.2±7.8	3.1±1.1
L3	72.7±9.0	5.95±0.15

The results show that self-tuning control reduces the variations in DO concentration. The standard deviation 0.15 mg/l is also only half the value obtained by e.g. Wells (1979) using a digital PID controller.

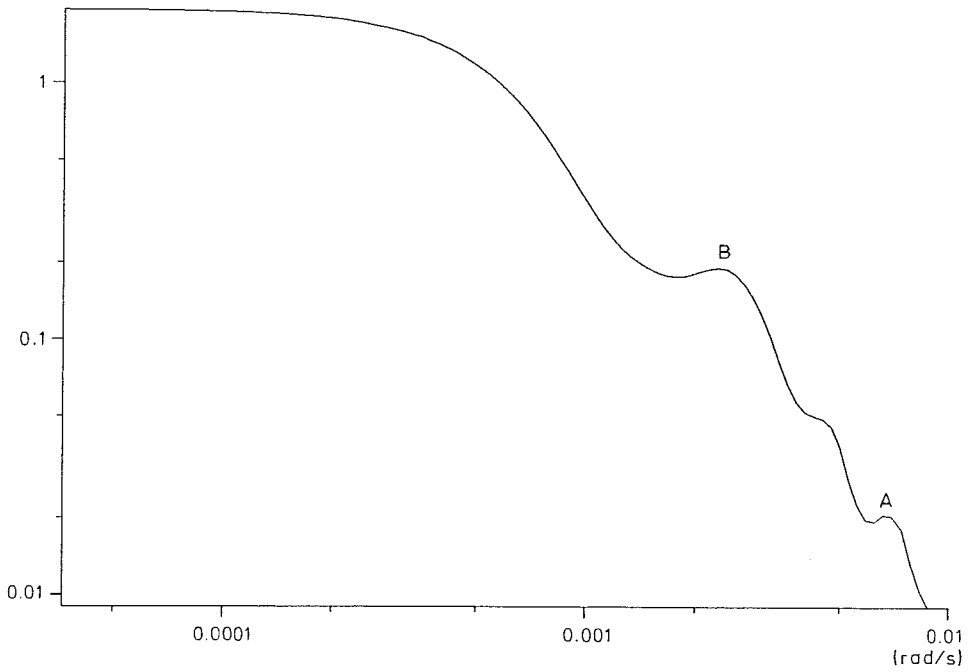

Figure 3.9 Power spectrum of the DO concentration in Fig 3.8.

Though the three experiments in the aerators are not identical, it is clear that the air is used more effectively in the controlled aerator than in the two other aerators. Thus control reduces the average air flow demand, and energy consumption, compared to a manually controlled aerator with equal DO concentration average.

A close look at the DO concentration for the controlled aerator in Fig. 3.6, reveals that the air flow rate is occasionally constrained resulting in larger deviations from the setpoint. These deviations are included in the standard deviation 0.15 mg/l. In fig 3.8 DO and air flow rate during an unconstrained period is shown. The mean value is 6.00 mg/l (the set point) and the standard deviation is 0.02 mg/l, which is clearly lower than earlier results on DO concentration control (see Wells (1979)).

A periodic component seems to be present in Fig. 3.8. Therefore the power spectrum of the DO concentration is computed (see Fig. 3.9). The sampling interval of the signals in Fig. 3.8 is 6 minutes. The high frequency peak (A) in Fig 3.9 is located approximately at the controller sampling frequency, i.e. a period of 15 minutes, and the lower frequency peak (B) corresponds to a 45 minutes period. This periodic component is however not always present in the DO signal.

4. Pressure control

The dissolved oxygen (DO) concentration control was treated in Chapter 3, assuming that air production control is available. The pressure control problem will be approached in a different manner than the DO, since the modelling does not play a significant role.

A short introduction on the process dynamics and characteristics is given in Section 4.1, and the control philosophy is discussed in Section 4.2. The implementation is discussed in Section 4.3 and the effects on energy consumption are evaluated in Section 4.4. A summary is given in Section 4.5.

4.1 Process dynamics

The air supply system is briefly described in Sections 2.2 and 2.3. It consists of a number of compressors with guide vanes and a pipe system connecting the different compressors and aerators via a common manifold. The pipes to the aerators have throttle valves to allow flow control.

The pipe system is large, the pipe length after the throttle valve is about 100 m, i.e. the aerator length, and the distances between the throttle valves are about 20 m. The distances between the blowers are between 5 m and 30 m. These distances can be compared with the speed of sound, some 360 m/s, and the air velocity, 20 - 30 m/s.

Modelling this system is a complicated task. It would require a dynamic compressor model and a dynamic gas flow model. Examples of gas flow models can be found in Iserman (1984) and in Fasol and Jörgl (1980). These models are lumped partial differential equations and thus of high order.

Since the low frequency part of the pressure dynamics has a simple step response, pressure control is fairly straightforward. The response time is in the order of seconds. Thus a PID controller which adjusts the compressor guide vanes to compensate for changes in demand and inlet conditions will perform

well.

The pressure is affected by the throttle valves, i.e. the air flow control system for each aerator. If the controllers are tuned for a high bandwidth, they may give severe coupling problems between the aerators. The distances between the aerators and the time required to change the flow pattern in the pipes are not negligible. If more moderate requirements are given to the air flow rate controllers, the flow pattern may remain quasi-stationary, which will give negligible interactions between the aerators.

The discussion so far has only considered the linear behaviour, while the nonlinearities are the main problems. The compressors have a limited control capacity. Each guide vane compressor can reduce its flow by 15 %. Thus 7 compressors are necessary to give a control capacity larger than the capacity of one single compressor. The plant has only 5 compressors, 3 of these have guide vanes. The normal demand is 2-3 compressors. Consequently there will be step changes in the air production when blowers are switched on and off (see also Chapter 5).

4.2 Control philosophy

The air production system will not have any influence on the activated sludge process properties, as long as the pressure is sufficiently high to give each aerator the desired quantity of air. On the other hand, the air production system has a great impact on plant economy. Blowing air through water costs a lot of energy (and money), and the cost increases with pressure.

To decouple the air flow rate loops, the header pressure must be controlled. If the pressure is sufficiently high, all air flow rate loops get the desired quantity of air. The pressure controller must cope with varying process gain, since either 1, 2 or 3 guide vane blowers operate.

The power consumed by a blower during adiabatic (reversible) compression is proportional to the flow and almost proportional to the cubic root of the pressure ratio over the blower (see Section 4.4). Thus a flow reduction will reduce the power consumption more than a pressure reduction. Fortunately, as was demonstrated in Chapter 3, DO control reduces the average air flow demand

to each aerator, compared to manual control, and thus unnecessary aeration is prevented. This gives the major part of the energy savings.

The flow rate F through a valve is given by

$$F = u \cdot k_v \cdot \sqrt{p - p_0} \qquad (4.2.1)$$

where u is the fractional opening, k_v a valve constant and $p - p_0$ the header pressure. Thus the flow F is a function of both valve opening and header pressure. To further reduce the power consumption for constant air flow rate F, the blower outlet pressure should be minimized and the throttle valve openings maximized. Each throttle valve position is fed back. The most opened valve should be about 90 % open. If the valve has a smaller opening, the controller should reduce the pressure. The air flow rate control loop then will open the throttle valve to maintain the desired air flow rate. This continues until the valve is 90 % open. Ideally, the most opened valve should be 100 % open, since this would give the minimum loss. However, the valve would have no control authority in the positive direction. The final choice of valve reference opening is a compromise between energy savings and control authority. This control strategy can be found in Shinskey (1978).

Thus three control loops are necessary. First, the air flow rate control loop, which mainly is part of the DO loop, adjusting the throttle valves to maintain the desired air flow rate. Second, the pressure reference value loop, which measures the throttle valve positions, selects the maximum value and adjusts the pressure reference value. Third, the pressure control loop, which adjusts the compressor guide vanes, to keep the header pressure close to the reference value.

Finally one program is necessary for switching compressors on and off. Since there are step changes in the air production, a compressor cannot be switched on or off immediately, when the guide vanes hit a limit. Several nonlinear coupling phenomena will occur at saturation conditions. The details will be discussed in Chapter 5.

4.3 Implementation of pressure control

This section discribes the implementation of pressure control and pressure minimization according to the discussion in Section 4.2. The purpose of this system is providing desired air flow rates to the aerators, while not exceeding a certain pressure limit in the manifold.

The pressure and the air flow rates are affected by both the blower guide vanes and the throttle valves. Despite its multivariable character, the system is usually controlled with single loop controllers, where the pressure is fed back to the guide vanes and the air flow rates to the throttle valves (see Figure 2.4).

Air flow rate control

The air flow rate is controlled by a PID regulator, manipulating the throttle valve to the aerator (see Figures 1.2 and 2.2). The air flow rate is measured via the differential pressure over a constriction. The loop is tuned to give a settling time 10 - 30 seconds. Generally inner loops should avoid integral action. However, the selftuner, providing air flow rate setpoints, has a long sampling period and the air flow will reach the setpoint long before next sampling instant.

The air flow rate loops interact when their setpoints are changed. If a moderate bandwidth is chosen, the couplings will be negligible. The maximum air flow to each aerator is 160 Nm^3/min. During normal operation the minimum allowable air flow is 45 Nm^3/min. Lower air flows may cause clogged diffusors due to too little agitation of the liquid. Normal air flows are in the range of 50 - 120 Nm^3/min. The measurement is a 0 - 10 VDC signal, where 0 VDC is 0 Nm^3/min and 10 VDC is 160 Nm^3/min.

Pressure control

The PI pressure controller, implemented in incremental form in the Asea Novatune, computes the guide vane setpoints. Thus

$$\Delta u = K \cdot \left[\Delta e + \frac{h}{T} e \right] \qquad (4.3.1)$$

where K is the gain, T the reset time, h the sampling interval, e the control error and $\Delta = 1 - q^{-1}$. The guide vanes are positioned by local PID controllers, which have a built-in deadzone. To prevent actuator wearing due to the integral action in the pressure controller, a deadzone of 0.001 Bar is included. The quantization

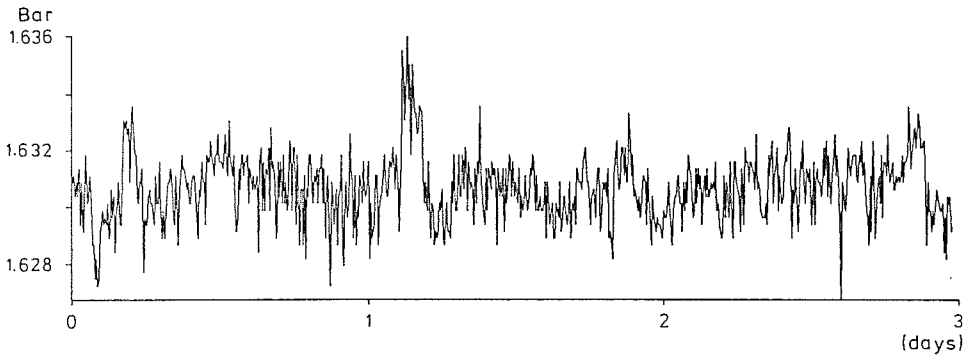

Figure 4.1 Pressure recording from 3 days with constant reference value. Quantization of the signal is clearly visible. The pressure deviation at 1.2 days is probably due to saturation or a short disconnection of the loop.

error in the AD converter corresponds to 25 % of the deadzone.

Normal operating pressures are 1.59 - 1.65 Bar (0.159 - 0.165 MPa), i.e. approximately 0.6 Bar (0.06 MPa) overpressure. Occasionally slightly higher pressures are used. The sampling interval of the PI controller is 3 seconds.

The pressure controller must cope with varying process gain, since either 1, 2 or 3 guide vane compressors may operate. It is tuned for a settling time of about 5 seconds. The controller gain depends on the signal scaling, the integral time is 3 seconds. The pressure reference value is either constant or supplied by the pressure minimization.

In Fig. 4.1 a pressure recording from 3 days with constant reference value is shown. The mean value is 1.6307 Bar and the standard deviation is 0.0018 Bar. Deviations less than 0.005 Bar from the set point are acceptable, while oscillatons with larger amplitude must be avoided.

The pressure measurement is a 0 - 10 V DC signal, where 0 V DC is 0 Bar overpressure and 10 V DC is 1.0 Bar overpressure. Thus only 10 % of the measurement range is used during operation. Sofar this disadvantage has not been serious.

The guide vane position is also a 0 - 10 V DC signal, where 0 V DC is minimum position and 10 V DC maximum position. The minimum position is chosen to ensure a reasonable surge protection.

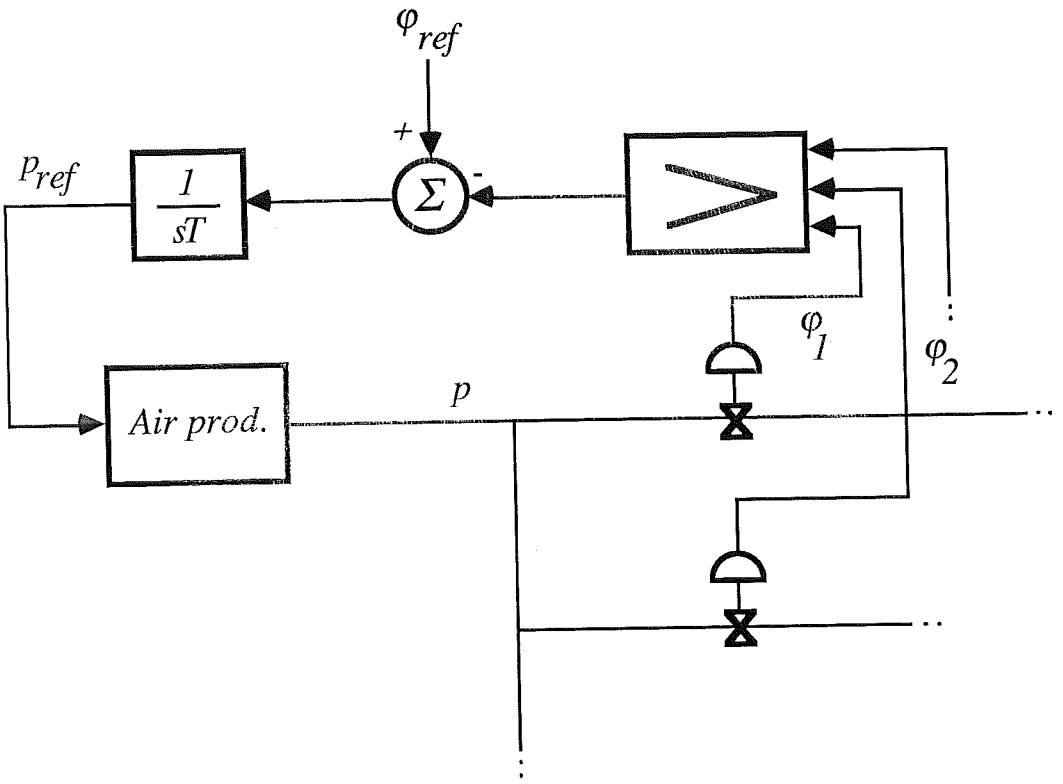

Figure 4.2 The pressure minimization loop, corresponding to block F in Figure 2.4.

Pressure minimization

The main idea in the pressure minimization is to maintain the most opened valve as open as possible, say 90 %. The pressure reference value is given by an integral control law

$$p_{ref} = \frac{1}{sT}\left[\varphi_{ref} - \max_i(\varphi_i)\right] \approx \frac{h}{\Delta T}\left[\varphi_{ref} - \max_i(\varphi\ )\right] \qquad (4.3.2)$$

where $\Delta = 1 - q^{-1}$, φ_i is the i:th throttle valve position and φ_{ref} is the desired position (see Fig. 4.2). The maximum is only computed for the aerators with closed loop air flow rate control. If $\varphi_{max} < \varphi_{ref}$ then p_{ref} decreases, which will cause the air flow controller to increase φ_{max}, and vice versa. p_{ref} is constrained to the interval 1.58 - 1.65 Bar. This structure has earlier been used by Shinskey (1978) to reduce energy dissipation in process control, and by Tyler (1985) in a DO control system. Tyler (1985), however, used a PI controller instead of a pure integral controller.

The settling time of the pressure reference value is recommended to be 5 - 10 times longer than other settling times in the air production system. Since the air flow rate loops have the longer settling time, 10 - 30 seconds, the pressure minimization must not settle much faster than 4 - 5 minutes. Then a reasonable sampling interval is 1 minute.

Since this loop aim at controlling a throttle valve position, it may be necessary to introduce a deadzone on $\max(\varphi_i)$ for the same reasons as in the pressure control. The throttle valve position is a 0 - 10 V DC signal, where 0 V DC is minimum position and 10 V DC maximum position.

The pressure minimization has not yet been implemented at Käppala. It is however a known strategy, and the benefits of using it will now be analysed.

4.4 Energy consumption

This section analyses the flow resistance and the compressor energy consumption. Intuitively it is clear that less power is needed to produce a given air flow, if the throttle valves are opened and the header pressure lowered. This statement will be verified. The compressor power analysis does however not consider reductions or changes in compressor or motor efficiency, only the power applied to the gas is computed.

Logged data from the Käppala plant and a flow resistance model will be used to compute the minimum required pressure. Then the energy consumption will be determined for for computed and logged pressure. This will illustrate possible energy savings by using a lower pressure, guided by the most-opened valve.

Flow resistance

A simple model relating header pressure p and air flow rate F to an aerator will be derived. The header pressure must exceed the static head, else the flow is zero. The dynamic head is assumed proportional to flow squared. Thus the model is

$$p = p_0 + k \cdot F^2 \qquad (4.4.1)$$

where p is (logged) header pressure, p_0 the static head, F the logged volumetric

air flow rate and k a flow resistance coeficient. This model will now be motivated.

The air flow passes long pipes, orifices, and porous media in the diffusor on its way to the aeration tank. For gas flows the Reynold's number is defined as $\varrho \cdot c \cdot D/\mu$, where ϱ is gas density, c gas velocity, D pipe diameter and μ gas viscosity (kinematic viscosity). For air ϱ = 1.3 kg/m^3 and μ = $20 \cdot 10^{-6}$ kg/ms. At Käppala typical air velocities are 20-30 m/s and many pipes has a 0.35 m diameter. This gives a Reynold's number $\approx 5 \cdot 10^5$, which is far more than 2000. Consequently the flow is turbulent and Hagen-Poiseuille's law for laminary flow does not apply.

For incompressible turbulent flow in a long pipe the pressure drop is approximately $\Delta p = a \cdot F \cdot |F|^{3/4}$, where F is the flow rate. For high values of Reynold's number, such as 10^6, the power of F is closer to 2 than 1.75. Incompressible flow through an orifice (e.g. a control valve) has pressure drop $\Delta p = k \cdot F \cdot |F|$, where k depends on the valve opening. A careful analysis could even consider the diffusors at the bottom of the aerator, in which the pressure drop, according to d'Arcy's law, is linear in flow, (see Wellstead (1979)). Due to the high Reynold's number it is reasonable to assume that the pressure drop is proportional to flow squared. The linear pressure drop in the diffusors is neglected.

The static head p_0 is essentially determined by the diffusor depth. The air flow is delivered into the aerators at an approximate depth of 6 m, but due to the large amount of air bubbles in the liquid, the average density is less than 1000 kg/m^3. It is also realistic to assume that the average density depends on the air flow, i.e. the amount of air bubbles in the liquid. The average density influences the static header pressure, since the distance between the diffusors and the surface is constant. Anyhow, the static head is assumed constant, and is empirically chosen as 1.568 Bar.

Pressure minimization

The minimum pressure for a given air flow rate will now be estimated. Due to varying throttle valve position, k is a varying coefficient in (4.4.1). For each sample, k is estimated by

$$k = \frac{p - p_0}{F^2} \qquad (4.4.2)$$

and the minimum value of k, k_{min}, is used for estimation of the minimum necessary pressure p_{min}, where

$$p_{min} = p_0 + k_{min} \cdot F^2 \qquad (4.4.3)$$

To avoid sensitivity of the choice of p_0, p is given a lower limit 1.61 Bar in the estimations of k_{min}.

The data available is logged during 4 months, with sampling interval 6 minutes, and consists of the volumetric air flow rates into three aerators (L1, L2 and L3) and the header pressure. A one month recording is shown in Fig. 4.3. The minimum value of k during the 4 months is estimated for each aerator separately, and the corresponding minimum pressures are computed. This is illustrated for aerator L2 in Fig. 4.4. Using the most-opened valve strategy, the aerator requiring the highest header pressure will dominate. Therefore the maximum (at each sample during the 4 months) of the 3 minimum pressures is also computed, and can be compared with the logged pressure in Fig. 4.5.

Compressor power consumption

The compressor power consumption will now be derived. The power P applied to a mass flow M of an ideal gas compressed from inlet pressure p_1 to outlet pressure p_2 is entirely converted into a temperature rise, giving

$$P = M \cdot C_p \cdot (T_2 - T_1) = M \cdot C_p \cdot T_1 \left[\frac{T_2}{T_1} - 1 \right] \qquad (4.4.4)$$

where T_1 and T_2 are inlet and outlet absolute temperatures and C_p is the heat capacitivity. During adiabatic (reversible) compression

$$\left[\frac{p_2}{p_1} \right]^{\Phi} = \frac{T_2}{T_1} \qquad (4.4.5)$$

where $\Phi = (\kappa-1)/\kappa$ and $\kappa = C_p/C_v$, but in practical situations the compression is polytropic, i.e.

$$\left[\frac{p_2}{p_1} \right]^{\Phi/\eta} = \frac{T_2}{T_1} \qquad (4.4.6)$$

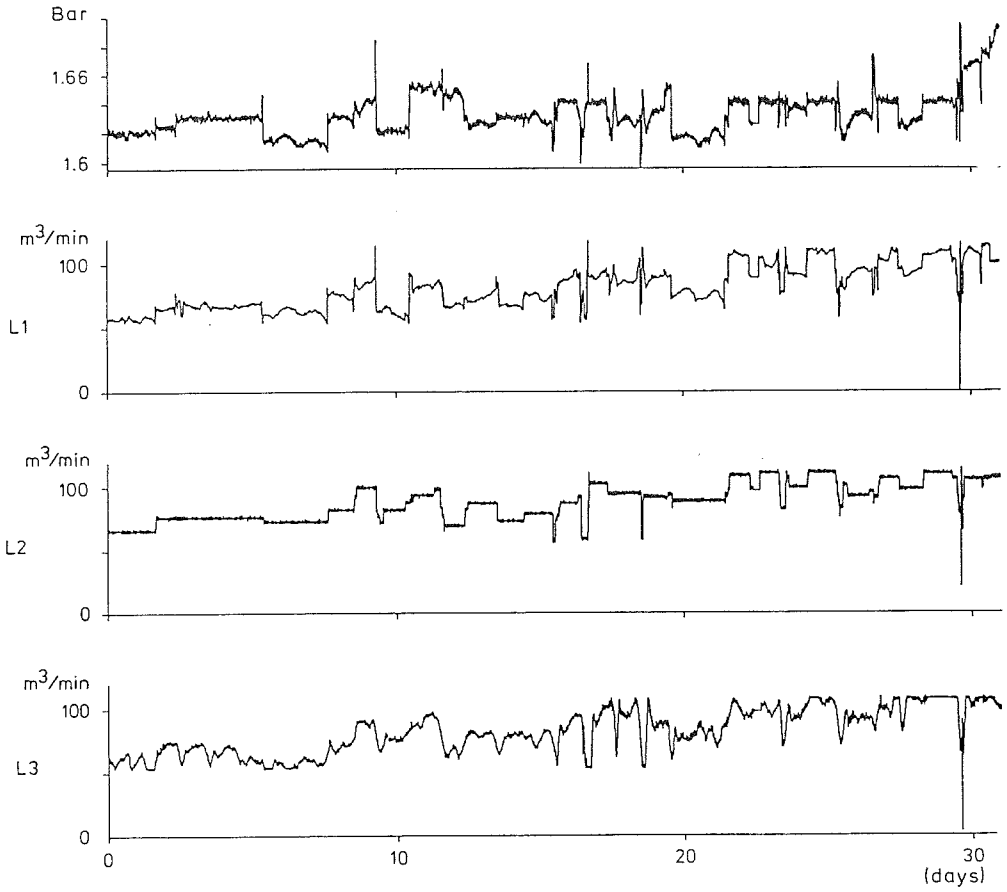

Figure 4.3 Header pressure and volumetric air flow rates into the three aerators during one month.

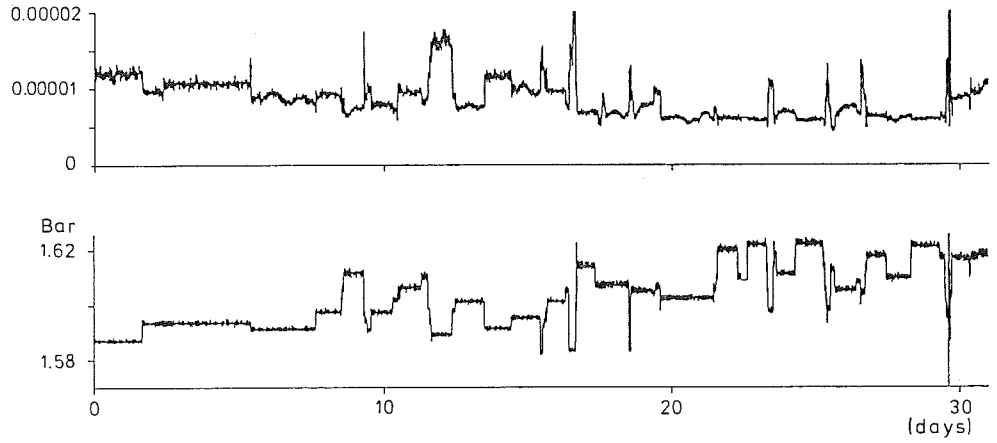

Figure 4.4 Estimation of the coefficient minimum k_{min} and the minimum pressure for aerator L2. The minimum value of k is $4.38 \cdot 10^{-6}$.

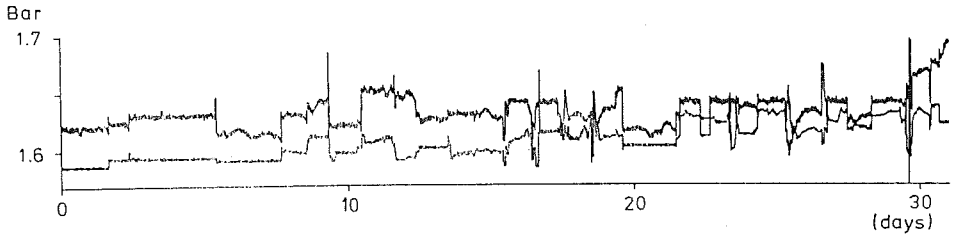

Figure 4.5 Maximum of the 3 minimum pressures (lower) and logged pressure (upper).

where the polytropic efficiency $\eta < 1$. Compressors typically have η in the range of 0.75-0.80, independent of the gas and the pressure ratio p_2/p_1. If the compressor has guide vanes or an inlet control valve, the efficiency depends on the actuator position, but this variation is neglected in the analysis.

For an ideal gas

$$p \cdot F = \frac{M \cdot R \cdot T}{w}$$

where M is mass flow rate, F volumetric flow rate, p absolute pressure, R the universal gas constant, T absolute temperature and w the molecular weight of the gas. Thus

$$M \cdot T_1 = p_1 \cdot F \cdot \frac{w}{R} \qquad (4.4.7)$$

where F is the logged volumetric air flow rate at inlet conditions. Thus the compressor power is given by

$$P = C_p \cdot p_1 \cdot F \cdot \frac{w}{R} \cdot \left[\left[\frac{p_2}{p_1} \right]^{\Phi/\eta} - 1 \right]. \qquad (4.4.8)$$

The energy consumption

The inlet pressure p_1 is assumed to be 1 Bar constantly, outlet pressure p_2 is logged or computed. R = 8.314 kJ/kmol·K, and for air C_p = 1 kJ/kg·K, w = 29 kg/kmol and Φ = 0.286. The polytropic efficiency η is assumed to be 0.8.

Month	Aerator	Energy consumption using Logged pressure	Minimum pressure	Maxmin pressure	
1	L1	67.1	64.6	64.8	MWh
			3.7	3.4	% savings
1	L2	73.0	70.2	70.5	MWh
			3.9	3.4	% savings
1	L3	67.9	64.9	65.6	MWh
			4.4	3.4	% savings
2	L1	61.8	56.7	56.9	MWh
			8.3	7.9	% savings
2	L2	69.7	63.9	64.4	MWh
			8.2	7.6	% savings
2	L3	63.1	57.5	58.3	MWh
			8.8	7.6	% savings
3	L1	59.7	54.4	54.4	MWh
			8.9	8.9	% savings
3	L2	60.5	54.7	55.1	MWh
			9.5	8.9	% savings
3	L3	57.2	51.5	52.1	MWh
			9.9	8.9	% savings
4	L1	60.1	52.9	53.5	MWh
			11.9	10.9	% savings
4	L2	71.7	63.6	63.9	MWh
			11.2	10.9	% savings
4	L3	69.5	61.8	62.0	MWh
			11.1	10.9	% savings

Table 1. Energy consumption for three aerators with logged and two computed pressures, and the percentage savings for the minimum and maximum of minium pressures compared to logged pressure.

Thus the power at each sampling instant is given by (4.4.8) and then the energy consumption E is given by

$$E = \sum P \cdot \Delta t \qquad (4.4.9)$$

where Δt = 6 minutes, i.e. the sampling interval of recorded data.

For each aerator and monthly period, the energy consumption expressed in MWh, using logged pressure, estimated minimum pressure and maximum of the minimum pressures, are computed. The result is listed in Table 1.

The first month gives realistic estimates of possible energy savings in the range 3-4 % by using the most-opened valve principle. During the last three months the aeration equipment was in a poor condition probably due to clogged diffusors, which required a higher header pressure. In such a case, 7-10 % energy could be saved by repairing, cleaning or replacement of the equipment, provided that the most-opened valve principle is used afterwards but not during the troublesome period.

4.5 Summary

The pressure and air flow rate controls have worked well at Käppala. The system was given mild performance specifications, thus they could be fulfilled using single loop controllers. No cross-coupling phenomena were observed.

Actuator wearing is crucial. Excessive actuator movements can be avoided by either a deadzone or a long sampling interval. The guide vane and air flow rate controllers have built-in deadzones, and fast loops affecting these controllers also require deadzones. Thus a deadzone is necessary in the pressure loop. It will probably also be demanded in the pressure minimization loop.

However, the deadzone is not necessary in the DO loops, which have long sampling intervals. The steady state errors in the air flow rates give negligible disturbances compared to the load disturbances. Thus the main disturbances to the air flow rate controllers are changes in header pressure due to other air flow loops or changes in pressure reference value.

The control system will give considerable energy savings. DO control typically gives 20 % energy savings due to more efficient use of the supplied air. This is however dependent on the previous quality of the manually operated activated sludge system and on the choice of DO setpoint. The pressure minimization will then at Käppala give an additional 3 - 4 % energy savings.

5. Nonlinear couplings in the control system

This chapter deals with constraints (saturations) in the plant and the nonlinear couplings in the control system that are necessary to handle them. Switching blowers on and off is also treated since this is a result of a lasting saturation in the air production.

5.1 Saturations and operational constraints in the plant

This section discusses restrictions in plant operation. Some of the restrictions are operational limits that must not be violated. These include considerations of security against major failures in the plant, e.g. surging blowers. Others restrictions, such as saturations in a control signal, cannot be violated.

The two main saturations of the control system are the upper and lower limits of the guide vanes and the throttle valves. They imply saturations in the air production and the air flow to each aerator. The valves and the guide vanes also have a limited rate of change.

There are several operational limits on air production, e.g. a maximum pressure. Above a certain limit, approximately 1.68 Bar, the surge protection mechanism of the compressors will open a recirculation valve and the compressor is then automatically switched off after a short while. This decreases both air production and manifold pressure, but in an unsatisfactory manner.

The demands on proper tuning of the air flow rate loops is in reality a demand on limiting the rate of change of the air flow rates. The throttle valve and guide vane actuator motors have a limited speed, but still this limit may give too fast changes in the air flow rates. If the air flow rate controllers are given a too high bandwidth, coupling may appear (see Section 4.1). Thus one way of avoiding interaction between the air flow rate loops and the pressure loop is using actuators with a sufficiently low speed, but still fast enough to fulfill the other specifications.

5.2 Handling the saturations

In this section some methods to handle the control variable restrictions are discussed.

The operational limits are quite easy to handle. The air flow rate setpoint, i.e. the control output from the selftuning controller, is limited to 55 - 160 m^3/min and the maximum setpoint change per sampling interval is 20 m^3/min.

One method of avoiding too large simultaneous air flow rate setpoint changes is letting the 6 different DO loops be scheduled to sample at separate sampling instants. Using a 15 minute sampling interval for each loop, each can be scheduled at 2.5 minutes distance from the preceeding. Then all air flow rates, but possibly not the pressure setpoint, will have settled before next air flow rate setpoint is changed.

If the pressure exceeds an upper limit, 1.68 Bar, the blower control program will switch off one blower (see Section 5.3), which is more favourable than using the surge protection mechanism. In the first case the blower can be restarted later, but in the latter case the blower may require manual intervention before a restart. As another precaution, blower start-up is disabled if the pressure is higher than 1.62 Bar. At too low pressures nothing dangerous can happen, and if the plant and the control system function properly, extra blowers will be switched on until the plant is in a normal state.

The limitations for the guide vanes and the throttle valves, are more difficult to handle, because these saturations affect cascaded control loops. The throttle valves affect the self-tuning DO controller, while guide vane saturations influence both the DO and the pressure minimization loops.

Throttle valve saturation

The self-tuning controllers are cascaded with air flow rate controllers (see Figures 1.2 and 2.2). When their actuators, i.e. the throttle valves, saturate, this information must be forwarded to the selftuner, since the air flow rate setpoint is not necessarily saturated. Due to the pressure minimization loop the throttle valves will operate close to upper saturation. Windup will not appear in the air flow rate controllers. Some solutions for the problem are proposed in Rundqwist (1985).

If no precautions are taken at upper saturation, the air flow setpoint will grow, until it saturates at the maximum setpoint. Later, when the saturation is not active, it will decrease again. The controller continues to adapt its parameters until the control signal reaches the upper limit. During this phase the process output decreases. This results in estimating a very small or even negative process gain. After the saturation, control may be poor due to high controller gain (see Fig. 5.1). It is also demonstrated by a simulation in Example 4 in Rundqwist (1985). Three of the methods from Rundqwist (1985) will now be presented.

Method 1 Two logical signals indicating upper and lower throttle valve saturation respectively are used. At upper saturation, the positive rate limit of the selftuner is set to zero. Then the control signal (the air flow setpoint) can only remain constant or decrease. At lower saturation, a similar action is taken. This method was used during the test period at Käppala 1983-1984 (see Fig 5.2). Details on the zeroed rate limit are given in Example 5 in Rundqwist (1985). From this example it is seen why feedback from the throttle valve is so important in the case of a cascaded selftuning controller. Without the valve feedback the parameter estimation may diverge at saturation in the inner loop. A cascaded PI controller would not exhibit this wild behaviour. □

Method 2 Example 8 in Rundqwist (1985), uses the valve position φ, $0 \leq \varphi \leq 1$, to estimate the possible air flow increase. Then the positive rate limit dh of the self-tuning controller output is

$$dh = K \cdot (1 - \varphi) \tag{5.2.1}$$

The negative rate limit is treated similarily. □

Method 3 If the air flow rate F is measured, it can be used to give an estimate of the actual upper limit hi of the controller, given by

$$hi = \min(F + dh,\ 160) \tag{5.2.2}$$

where dh is given by (5.2.1). This method gives a smoother anti-windup solution than the two previous methods. During saturation the upper limit tracks the real control signal F, rather than remains constant at the value F_{ref} from the first saturated sampling instant. The method is

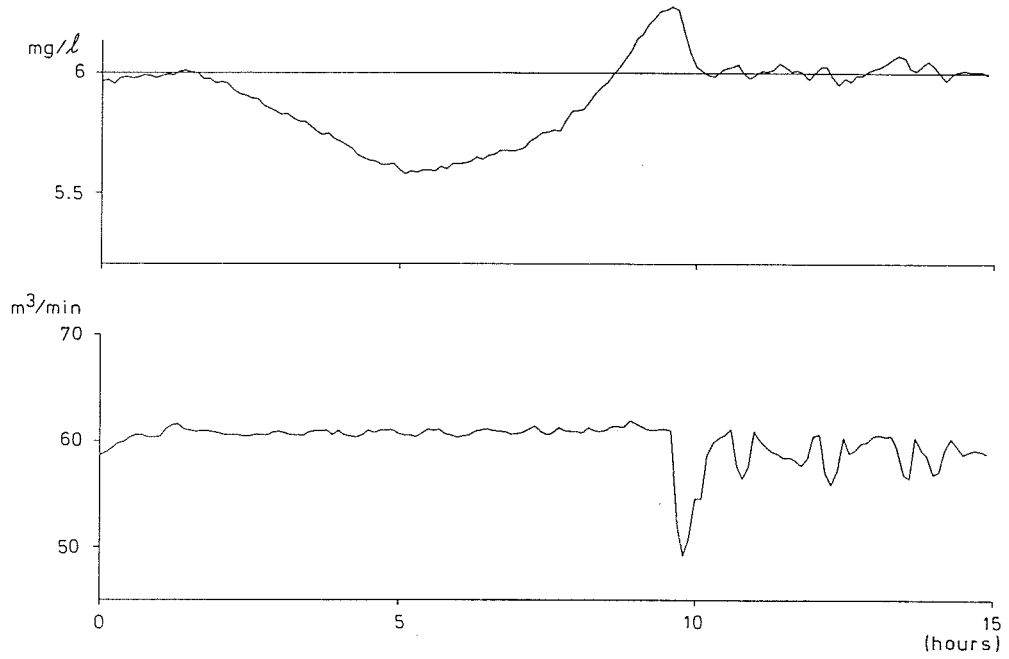

Figure 5.1 DO concentration (upper curve) and air flow rate (lower curve) during reset windup due to failing throttle valve saturation indication. The air flow remains constant despite a decreasing DO concentration, while the air flow rate setpoint (not shown) increases to the upper limit. The saturation results in an overshoot in DO and a too high controller gain, giving a noisy output after the saturation has disappeared. No extra blower could be started automatically.

described in Example 9 in Rundqwist (1985). □

In the final implementation at Käppala, one of the two latter methods will be used.

Guide vane saturation

As mentioned earlier, guide vane saturations influence the other control loops. Fortunately, the pressure loop computes the guide vane setpoints, thus the anti-windup in the PI pressure controller is just a matter of using correct upper and lower limits. When the guide vanes saturate the manifold pressure is instead controlled by the throttle valves. Closing throttle valves may increase the pressure unless the guide vanes can compensate by closing. Opening throttle valves can similarly create a pressure drop. The restrictions on the pressure minimization and the DO loops have the purpose of at least avoiding an undesired pressure rise in the manifold.

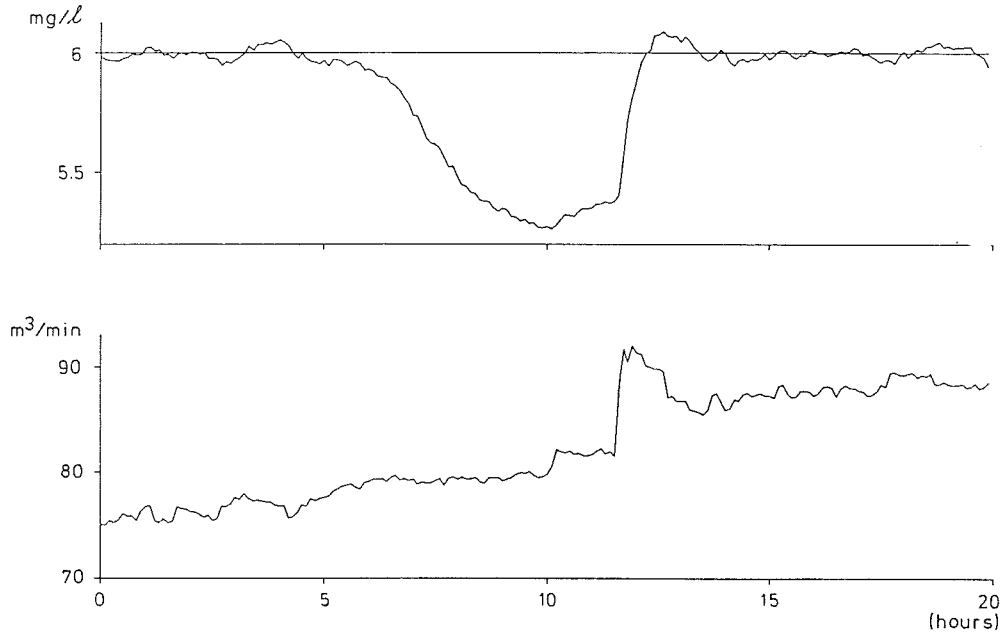

Figure 5.2 DO concentration (upper curve) and air flow rate (lower curve) during throttle valve saturation using a zeroed positive rate limit. The saturation starts after 6 h, and the air flow rate remains constant while the DO concentration drops. After 10 h, the saturation disappears temporarily, and after 12 h, when a blower is started manually, it finally disappears. The overshoot in DO is negligible compared to normal output variations. No extra blower could be started automatically.

Lower saturation of the guide vanes normally appears for decreasing air flow demand. Then, if any throttle valve closes, the manifold pressure will rise. If anyone of them opens, the guide vanes can leave the limit. Thus it is not desirable if the throttle valves close during lower guide vane saturation. The remedy is simple; prevent the throttle valves from closing during lower guide vane saturation, by e.g. a logical signal disconnecting the voltage in the negative direction of the actuator. It is also necessary to set the negative rate limit of the selftuning DO controller output to zero. Then it will not decrease its air flow rate setpoint. If it is impossible to disconnect the negative voltage in the actuator, or perform some similar action in another configuration, zeroing the negative rate limit in the selftuner is a minimum requirement.

At upper guide vane saturation the controller tries to increase or maintain the manifold pressure. This usually happens while the air demand is increasing. Then at least some of the throttle valves are almost wide open. If any of them opens up further, the pressure drops. If anyone of them closes, the guide vanes can leave

the upper limit. Thus no system failures will take place at upper saturation. To avoid a large pressure drop, however, the positive rate limit of the selftuners should be zeroed, or the air flow rate controllers will compete for the available air flow. If necessary, the positive direction voltage of the air flow rate controllers can be disconnected.

It is of course possible to use the same type of reduction of the rate limits as in (5.2.1), using feedback from the guide vane positions. Then the DO controllers will saturate smoothly.

The pressure minimization loop contains an integral controller. At upper guide vane saturation the positive rate should be zeroed and vice versa at lower saturation. Otherwise the pressure setpoint will drift away towards its boundaries. During changes in air flow demand the guide vanes are likely to remain saturated for longer periods. This will then normally result in switching a blower on or off. This is discussed in Section 5.3.

5.3 Switching blowers on and off

In this section the main ideas and conditions behind the blower control program are presented. The program is realised as a synchronous sequence network. Full details will be given in an implementation report under preparation (Rundqwist (1986)).

As was pointed out in section 4.1 the air production is not continuous from one guide vane blower with fully throttled guide vanes up till all blowers running with fully open guide vanes. Thus the switching conditions have to consider the step change in the air production, which must not create a saturation in a direction opposite to the one that initiated the start or stop. Should this be the case, blowers may be switched on and off with short intervals.

A blower cannot be started until the air production demand exceeds a certain value. The demand cannot be measured from air flow control errors, since the selftuners are also saturated because of the guide vane saturation (see Section 5.2). Due to the saturation, the DO concentration is in open loop. During a period of increasing air flow demand and saturated guide vanes, the DO concentration will decrease. Conversely, the DO concentration will increase while the air flow

demand decreases and the guide vanes are saturated.

The restrictions in the air production can be eliminated by replacing present blowers by other types, with larger control authority. If this is regarded as too expensive, the control system has to cope with the present blower equipment.

General switching conditions

During increasing air demand, the DO concentrations will decrease if the guide vanes saturate. Then the control errors are used for determining when to start next blower, and vice versa for decreasing air demand. Thus a blower is started if

C1) Upper guide vane saturation and the maximum DO control error $e = c_{ref} - c > x_1$ mg/l, or

C2) Upper guide vane saturation and the sum of DO control errors $> x_2$ mg/l.

A blower is stopped if

C3) Lower guide vane saturation and the minimum DO control error $< -x_1$ mg/l, i.e. $c > c_{ref} + x_1$, or

C4) Lower guide vane saturation and the sum of DO control errors $< -x_2$ mg/l.

The control errors are only computed for operational DO control loops. The limits x_1 and x_2 have not been tested, but are approximately 1 mg/l. The limits correspond to reasonable demands of air flow changes.

For safety reasons the following two conditions are added.

C5) If the manifold pressure exceeds 1.68 Bar, one blower is switched off.

C6) If the manifold pressure exceeds 1.62 Bar, no blower will be started.

Condition C5 will save the surge protection mechanisms from stopping blowers, and condition C6 will ensure that no blower is started if there is any chance of reaching higher pressures.

The plant always requires at least two running blowers. The three following conditions will ensure this.

C7) If less than 2 blowers are running, one blower is started.

C8) If less than three blowers are running, no blower will be stopped.

C9) After a mains power failure where all blowers have stopped, two blowers are given a start signal immediately after power return.

Conditions C5 and C6 must still be satisfied under conditions C7 and C8 respectively. Condition C7 is valid only if blowers suddenly stop due to some failure, other than total power failure. In that case condition C9 is used. The blowers are equipped with start sequencers, i.e. after a power failure they will start in a predefined order within 3 - 4 minutes after power return. Should any of the two selected blowers fail to start from condition C9, then condition C7 becomes valid after 5 minutes.

The blower control program must receive the following signals.

S1) Mains power failure indication from the 3 kV supply.

S2) Pressure measurement, or logical signals indicating conditions C5 and C6 above.

Conditions for switching one blower on and off

A blower is always in one of the following states, ready/not ready, running/not running. Ready indicates that the control program may start and stop the blower. Running is an obvious indication. Before a blower is started or stopped, the guide vanes must be in the minimum position. Conditions C1 and C2 above require upper saturation before starting a blower. Thus the control program must move the guide vanes to the minimum position, which in turn requires the guide vane controllers to be in 'Automatic and External' mode, i.e. closed loop control with external setpoint.

To handle each blower correctly, the following signals are needed.

S3) Ready signal from each blower.

S4) Run signal from each blower.

S5) 'Automatic and External' indication from each guide vane controller.

S6) Guide vane positions, or a logical signal indicating minimum positions.

S7) Start signal to each blower.

The start conditions for a blower are fulfilled if it is ready but not running, and the guide vane controllers for the running and forthcoming blowers are in 'Automatic and External' mode. The stop conditions are fulfilled if the blower is running.

The start procedure

The implemented start procedure is briefly described by

T1) Start request arrived (conditions C1, C2 or C7 satisfied, but not C6) and start conditions fulfilled.
T2) Guide vanes are moved from maximum to minimum position
T3) When the guide vanes are in minimum position, a start signal is given to the selected blower. The guide vanes are kept in minimum position.
T4) After receiving a run signal from the started blower, wait 5 minutes before next start or stop is allowed.

The stop procedure

The implemented stop procedure is briefly described by

F1) Stop request arrived (conditions C3, C4 or C5 satisfied, but not C8) and stop conditions fulfilled.
F2) Stop the blower.
F3) Wait 5 minutes after the run signal from the blower has disappeared.
F4) Next stop is possible if condition F1 is fullfilled, but wait another 10 minutes before next start, according to T1, is allowed.

The sequence network

The blower control program is implemented as a synchronous sequence network in the Asea Novatune using SR flip-flops. Contrary to standard sequence networks, this one has a long sampling interval (10 seconds) to ensure that operator communication and other tasks with low priority are not locked, e.g. the adaptation in the self-tuning controllers. The inputs and outputs are the signals defined above. The outputs are determined by the present state, i.e. the sequence network is a Moore automaton (see Lee (1978)). The network roughly contains the states indicated in Fig. 5.3. An example of a complete transition now follows.

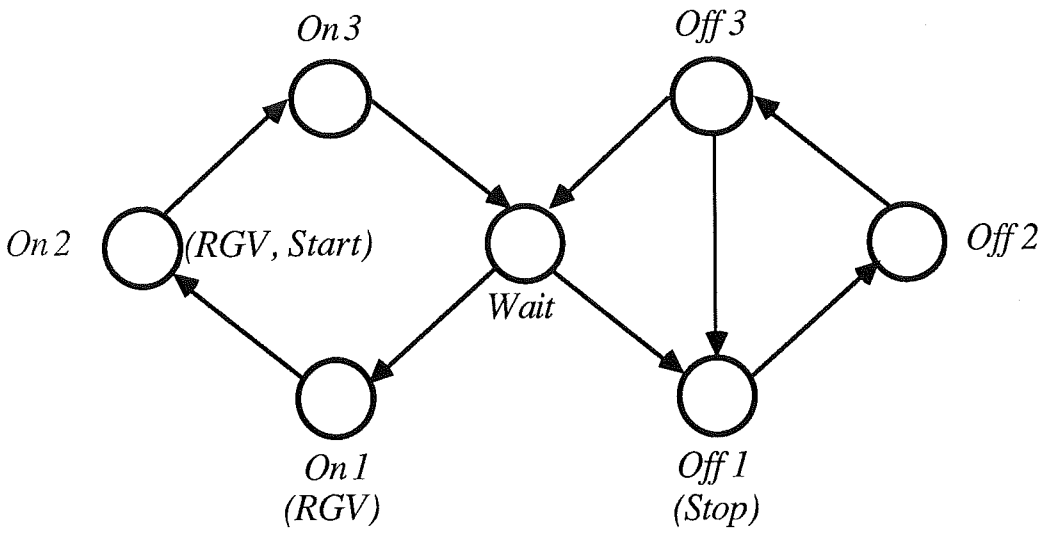

Figure 5.3 Simplified version of the synchronous network for switching blowers on and off. Wait is the normal state. The states On1 - On3 implement the start sequence T1 - T4. RGV is a logic signal that moves the guide vanes to minimum position. The blower is started in state On2. Off1 - Off3 implement the stop sequence F1 - F4. The blower is stopped in state Off1.

Example The complete transition from Wait to On1, according to T1, is as follows. To make the expression compact, a number of logical variables are introduced

WAIT	The state is WAIT
BMSTART	Start conditions satisfied, i.e. the blower is ready but not running etc.
PLOW	Pressure is lower than 1.62 Bar, i.e. neither C5 nor C6 satisfied.
FEWBM	Less than two blowers running, i.e. C7 satisfied
RQON	Start request, from C1 or C2

Then the Set condition for state On1 is

SET(On1) = WAIT·BMSTART·PLOW·(FEWBM+RQON)

and the Reset condition for Wait is SET(On1), delayed one sample. □

The transition to Off1 is similar. The control program also contains algorithms for selecting blowers ready to start and stop, checking that a selected blower remains ready during a start or stop procedure, rotating the start and stop priorities, handling time out in the network, etc. Thus the other transition conditions are more involved. Except for the DO control error limits, the blower control program has been tested at Käppala.

5.4 Summary

This chapter has dealt with "anti windup" and related problems. Nonlinear couplings between different loops have been introduced in order to guarantee decent behaviour during saturation conditions. These couplings are here summarized for each controller.

* Air flow rate controllers: If possible or necessary, disconnect the negative direction of the controllers at lower guide vane saturation, and vice versa at upper saturation.

* Pressure controller: Anti reset wind-up is taken care of, as soon as correct limits for the guide vanes are given.

* Pressure minimization: Fixed upper and lower limits for the normal case. At guide vane saturation the output must be constrained in the same direction as the saturation.

* Self-tuning DO controller: Fixed upper and lower limits and rate limits for the normal case. At throttle valve saturation, the rate limits must be zero. The upper and lower limits can also be changed, see Methods 1 - 3 in 5.2. Guide vane saturations can be treated similarly. At maximum DO signal the control signal is kept constant until manual actions have been taken, and when fast DO changes appear the rate limits are decreased (see Section 3.5).

Only Method 1 in Section 5.2 been tested using throttle valve feedback concurrent with DO control. The result was satisfactory. The precautions above are also necessary, but minor changes may be required during the implementation. The blower control program has been tested successfully. The DO control error limits for starting and stopping blowers remain to be determined.

6. Summary

This chapter summarizes the experiences on self-tuning dissolved oxygen control, air production control and energy savings. Future research topics are also discussed.

6.1 Dissolved oxygen concentration control

In order to use closed loop dissolved oxygen concentration control the header pressure and the air flow rate to the aerator must be controlled. If reasonable demands on the closed loop bandwidth are given, a self-tuning controller based on a first order process model is relevant. Due to the process load disturbance, the controller must have integral action.

The first order model, however, gives a lower bound on the sampling interval of at least 15 - 20 minutes, and the closed loop pole should be located at 0.3 - 0.4. The resulting solution time is approximately 50 minutes. Minimum variance control is not feasible unless the sampling interval is further increased. The self-tuning controller easily adapts to process changes. The closed loop DO concentration control error has a standard deviation of only 0.02 mg/l.

Comparisons between different aerators indicate that less air is consumed during self-tuning DO control compared to manual control. The reason is a more efficient utilization of the supplied air. In order to ensure proper operation near or at saturation conditions, a number of nonlinear couplings must be introduced in the control structure. At such operation conditions, the selftuner is of course not capable of maintaining the desired control signal.

6.2 Air production control and energy savings

The air production control consists of three parts, the blower sequence control program, pressure control and pressure minimization. The air flow rate control to the aerators is also closely coupled to the air production. So far the pressure control and the blower sequence control program have been tested, though not simultaneously. The pressure minimization procedure has been used elsewhere in process control. Thus it only remains to connect the pieces into one control structure.

During DO control one typically obtains 20 % energy savings compared with manual control (see Wells (1979) and Flanagan et al (1977)). The savings depends on the previous manual operation. Thus it is possible to save more than 20 % energy, if the plant suffers from excessive aeration. Simulation studies indicate that the pressure minimization can reduce the energy consumption by an additional 3 - 4 % at Käppala.

6.3 Future work

The implemented DO control system can serve as a basis for several research directions in wastewater treatment. The water quality properties can be further evaluated using constant or varying DO setpoint. Today the DO setpoint is adjusted by the operator. However, it is an interesting challenge to have the setpoint computed by an extra control loop, using feedback from effluent water quality measurements. The loop can be a normal feedback loop or some type of optimization, where the DO profile or e.g. the biochemical oxygen demand (BOD) is fed back.

The DO concentration is not the ultimate indicator of the process quality Instead the purpose of wastewater treatment is removal of compounds with undesireable effects in the recipient, such as (BOD). It is interesting to optimize the amount of BOD removal per unit energy consumed. This topic is considered in a static analysis by Kubota and Fujie (1985), but it may also be given a dynamic viewpoint, where energy consumption and BOD measurements via an optimizer are used to determine e.g. the DO setpoint. A simpler method is to determine a fixed effluent BOD setpoint and use a control algorithm to determine the DO setpoint. These schemes may further increase the energy saving from DO

control, since an unnecessarily high DO setpoint may be avoided.

During closed loop DO control, the value of the DO profile at the measurement point is given a fixed value. The aerator load and air flow distribution determine the shape of the profile. The BOD removal (and effluent BOD) depends on the whole DO profile, see Olsson and Andrews (1978). The profile slope and the location of the inflection point indicate the degree of completion of the process. Thus the BOD removal is connected to the DO profile.

Maintaining a given DO profile, such as a specified slope and convexity in the latter aerator half, might be one way of determining the DO setpoint. Then effluent BOD is not used directly, instead the profile will be based on theoretical assumptions. Still the scheme has the possibility of increasing the energy savings.

Using the DO profile slope at the outlet for estimation of the organic load is discussed in Olsson and Andrews (1981). Then a DO setpoint can be computed, but the estimation of the load requires a known oxygen transfer rate $k_L a$. It is possible to estimate both the oxygen transfer rate $k_L a$ and the respiration rate simultaneously (see Holmberg and Olsson (1985)). The estimation method requires an experiment using an independent air flow rate input. Thus, given $k_L a$ and two DO measurements close to the outlet, a DO setpoint may be established, such that the process may reach completion. The estimates of $k_L a$ and respiration rate may also be used to determine the recirculation rate and the step feed in order to improve the process.

It is not possible to use the selftuning controller parameters for estimation of $k_L a$ and the respiration rate, since in closed loop the control signal is not independent of the process output. This independence is necessary to obtain good identifiability. However, an identification experiment and the computation of a DO setpoint can be added to the selftuning DO control system.

Thus a DO control system, using self-tuning control, can be used for further improvement of the control of activated sludge systems. The main goal should be determining a suitable DO setpoint, which will satisfy demands on effluent water quality without excessive energy consumption.

References

Agarwal, M. and D.E. Seborg (1985): Self-tuning Controllers for Nonlinear Systems. Paper IFAC Workshop on Adaptive Control of Chemical Processes, Frankfurt A/M, FRG, Oct. 21-22.

Asea Novatune Documents (1984): CK23-2003E, CK23-2004E and CK23-2010E, Asea Industry and Electronics, Västerås, Sweden.

Åström, K.J. (1981): Control Theory - an elementary introduction, Ch 2. (In Swedish). Report TFRT-3164, Dept. Aut. Contr., Lund Inst. Techn.

Åström, K.J. and T. Hägglund (1984): Automatic Tuning of Simple Regulators with Specifications on Phase and Amplitude Margins. Automatica, 20, 645-651.

Åström, K.J. (1983): Theory and Applications of Adaptive Control - A Survey, Automatica, 19, 471-486.

Åström, K.J. and B. Wittenmark (1984): Computer Controlled Systems - Theory and Design. Prentice-Hall, Englewood Cliffs, New Jersey.

Dochain, D. and G. Bastin (1984): Adaptive identification and control algorithms for nonlinear bacterial growth systems. Automatica, 20, 621-634.

Dold, P.L., G.A. Ekama and G. v R. Marais (1980): A General Model for the Activated Sludge Process. Prog. Wat. Tech, 12, 47-77.

Egardt, B. (1980): Stability Analysis of Discrete Time Adaptive Control Schemes. IEEE Trans. Aut. Contr., Vol AC-25, 710-716.

Fasol, K.H. and H.P. Jörgl (1980): Principles of Model Building and Identification. Automatica, 16, 505-518.

Flanagan, M.J., B.D. Bracken and J.F. Roesler (1977): Automatic Dissolved Oxygen Control. J. of the Environmental Engineering Div., EE4, 707-722.

Foxboro (1984): PID Algorithm with Self-tuning. TI 200-222, Foxboro Company, Foxborough, Mass.

Goodwin, G.C., B. McInnis and R.S. Long (1982): Adaptive Control Algorithms for Waste Water Treatment and pH Neutralization. Optimal Control Appl. & Meth., 3, 443-459.

Grady, C.P.L. and H.C. Lim (1980): Biological Wastewater Treatment: Theory and Applications. Marcel Dekker, Inc.

Holmberg, U. and G. Olsson (1985): Simultaneous On-Line Estimation of Oxygen Transfer Rate and Respiration Rate. 1:st IFAC Symposium on Modelling and Control of Biotechnological Processes, 11-13 Dec., Noordwijkerhout, The Netherlands.

Holmström, H. (1979): Experiencies of Measurement- and Control Equipment in Sewage Treatment Works (In Swedish). Swedish Water and Waste Water Works Association (VAV), Meddelande M26, April, 147-154.

Isermann, R. (1984): Process Fault Detection Based on Modelling and Estimation Methods - A Survey. Automatica, 20, 387-404.

Isermann, R. and R. Kofahl (1985): On the Application of Parameter Adaptive Control Cystems for Industrial Processes. Paper IFAC Workshop on Adaptive Control of Chemical Processes, Frankfurt A/M, FRG, Oct. 21-22.

Kubota, H. and K. Fujie (1985): Mathematical Modelling of Energy Consumption in Biological Wastewater Treatment. In Jörgenssen, S.E. and M.J. Gromiec (Eds.): Mathematical Models in Biological Waste Water Treatment, Elsevier, Amsterdam.

Lee, S.C. (1978): Modern Switching Theory and Digital Design. Prentice Hall, Englewood Cliffs, New Jersey.

Metcalf & Eddy, Inc. (1972): Wastewater Engineering: Collection, Treatment, Disposal. McGraw-Hill.

Olsson, G. (1977): State of the Art in Sewage Treatment Plant Control. AIChE Symp Series, 72, 52-76.

Olsson, G. and O. Hansson (1976): Stochastic Modeling and Computer Control of a Full Scale Wastewater Treatment Plant, Proc. Symp. on Systems and Models in Air and Water Pollution, The Institute of Measurement and Control, London, Sep.

Olsson, G. and J.F. Andrews (1978): The Dissolved Oxygen Profile - a valuable Tool for the Control of the Activated Sludge Process. Water Research, 12, 985-1004.

Olsson, G. and J.F. Andrews (1981): Estimation of Loading Changes for the Nitrifying Activated Sludge Process. Paper 108.3, IFAC 8th World Congress, Kyoto, Japan.

Olsson, G., L. Rundqwist, L. Eriksson and L. Hall (1985): Self-tuning control of the Dissolved Oxygen Concentration in Activated Sludge Systems. In Drake, R.A.R. (Ed.) Instrumentation and Control of Water and Wastewater Treatment and Transport Systems, Pergamon Press, London.

Rundqwist, L. (1985): Integral Action and Mode Transitions in Self-tuning Process Control. Paper IFAC Workshop on Adaptive Control of Chemical Processes, Frankfurt A/M, FRG, Oct. 21-22.

Rundqwist, L. (1986): Implementation of Self-tuning Dissolved Oxygen Control at Käppala Sewage Treatment Works. To appear.

Shinskey, F.G. (1978): Energy Conservation through Control. Academic Press, New York.

Stenstrom, M. and J.F. Andrews (1979): Real-time Control of Activated Sludge Process. J. of the Environmental Engineering Div. , EE2, 245-260, April.

Svoronos, S., G. Stephanopoulos and R. Aris (1981): On Bilinear Estimation and Control. Int. Jour. of Control, 34, 651-684.

Tuffs, P.S. and D.W. Clarke (1985): Self-tuning Control of Offset: a Unified Approach. Proc IEE, 132, Pt. D. No. 3. May.

Tyler R. (1985): Sewage Works Automation at Holdenhurst Sewage Treatment Works. In Drake, R.A.R. (Ed.) Instrumentation and Control of Water and Wastewater Treatment and Transport Systems, Pergamon Press, London.

Wells, C.H. (1979): Computer Control of Fully Nitrifying Activated Sludge Processes, Instrumentation Tech., April, 32-36.

Wellstead, P.E. (1979): Introduction to Physical System Modelling. Academic Press, London.

Yust, L.J. and J.A. Howell (1986): Application of a Self-tuning Regulator to Control Dissolved Oxygen in an Activated Sludge Plant. To appear in Journal of Water Poll. Control Fed.

Appendix

Spatial discretization of the DO partial differential equation

The dissolved oxygen partial differential equation is

$$\frac{\partial c}{\partial t} = E \frac{\partial^2 c}{\partial z^2} - v \frac{\partial c}{\partial z} + k_L a \left[c_s - c \right] - R \qquad (3.2.4)$$

where z, $0 \leq z \leq 1$, is a dimensionless spatial coordinate along the length of the aerator, $c = c(z,t)$, $R = R(z,t)$, $k_L a = k_L a(z,t)$, v the stream velocity and E the dispersion coefficient.

The spatial derivatives are discretized in the following way

$$\frac{\partial^2 c}{\partial z^2} = \frac{c(z+\Delta z) - 2c(z) + c(z-\Delta z)}{\Delta z^2} \qquad (A.1)$$

and

$$\frac{\partial c}{\partial z} = \frac{c(z) - c(z-\Delta z)}{\Delta z} \qquad (A.2)$$

using a backward difference approximation of the first derivative. Further $k_L a$ is given by

$$k_L a = a_1 \cdot F + a_2 \qquad (3.2.2)$$

where F is the air flow rate. Using (3.2.2) and (A.1-2), (3.2.4) becomes a system of ordinary differential equations. Each equation describes a complete mix model located at the discretization point. Let $z = k \cdot \Delta z$, $k = 0,\ldots,n$, and replace the z's by their index, then the system of equations can be written

$$\frac{dc(k)}{dt} = \frac{E}{\Delta z^2} c(k+1) + \left[\frac{E}{\Delta z^2} + \frac{v}{\Delta z} \right] \cdot c(k-1) - R(k) +$$

$$+ \left[a_1 \cdot F + a_2 \right] \cdot c_s - \left[\frac{2E}{\Delta z^2} + \frac{v}{\Delta z} + a_1 F + a_2 \right] \cdot c(k) \qquad (A.3)$$

$$k = 0, 1, \ldots, n$$

The dispersion E and the stream velocity v are small compared to $k_L a$. The partial differential equation is obtained in the limit when $\Delta z \rightarrow 0$. A single complete mix model is obtained if $\Delta z = 1$. Then $c(0) = c_{in}$, the influent DO concentration, and $c(1) = c$, the DO concentration in the aerator.

If the surrounding DO concentrations in (A.3) and the coefficient a_2 in (3.2.2), are neglected, then (A.3) can be written

$$\frac{dc}{dt} = - a_0 \cdot c + k_L a \cdot (c_s - c) - R$$

$$= - a_0 \cdot c - a_1 \cdot c \cdot F + a_1 \cdot c_s \cdot F \quad - R \qquad (A.4)$$

where

$$a_0 = \frac{2E}{\Delta z^2} + \frac{v}{\Delta z} \qquad (A.5)$$

R is given by

$$R = \frac{c}{k + c} \cdot R_1 \qquad (3.2.3)$$

where $k > 0$ and R_1 is independent of c. The partial derivative of R with respect to c is

$$\frac{\partial}{\partial c} R = \frac{k}{(k + c)^2} \cdot R_1 \qquad (A.6)$$

Linearizing (A.4) around an equilibrium c_0, F_0 and R_0, gives

$$\frac{d}{dt} \delta c = - \left[\frac{2E}{\Delta z^2} + \frac{v}{\Delta z} + a_1 F_0 + \frac{k}{(k + c_0)^2} R_{10} \right] \cdot \delta c +$$

$$+ a_1 (c_s - c_0) \cdot \delta F_{air} = - a \cdot \delta c + b \cdot \delta F \qquad (A.7)$$

where δ denotes deviations from the equilibrium. If the Laplace transformation is applied to (A.7),then the first order transfer function

$$G(s) = \frac{b}{s + a} \qquad (A.8)$$

from air flow rate to DO cencentration is obtained.

A discrete time model for the dissolved oxygen concentration

A straightforward way to obtain a discrete time model is to integrate (A.4), assuming that both air flow rate F and respiration rate R are constant over the sampling interval [t, t+h]. Then the DO concentration at time t + h is

$$c(t+h) = a(F,h)\cdot c(t) + b(F,h)\cdot F(t) - r(F,h)\cdot R(t) \qquad (3.4.1)$$

where

$$a(F,h) = \exp\left[-h\cdot\left[a_0 + a_1\cdot F(t) \right]\right] \qquad (A.9)$$

$$b(F,h) = \frac{a_1 c_s}{a_0 + a_1 F(t)} \left[1 - a(F,h) \right] \qquad (A.10)$$

$$r(F,h) = \frac{1}{a_0 + a_1 F(t)} \left[1 - a(F,h) \right] \qquad (A.11)$$

For small changes in air flow rate F and a constant sampling interval, the pulse transfer function from air flow rate to DO concentration is

$$H(q^{-1}) = \frac{b\, q^{-1}}{1 - a\, q^{-1}} \qquad (3.4.2)$$

where a and b are given by (A.9-10), with h and F inserted. This transfer function is not identical to the transfer function obtained by sampling (A.8). In the latter case the change in respiration rate gives a small contribution to the a-coefficient.

The Asea Novatune self-tuning controller

Assume the process to be controlled is given by a transfer function $H(q^{-1})$ of degree n and time delay d. Then

$$H(q^{-1}) = \frac{B(q^{-1})}{A(q^{-1})} = \frac{b_{d+1}q^{-d-1} + \ldots + b_n q^{-n}}{1 + a_1 q^{-1} + \ldots + a_n q^{-n}} \qquad (A.12)$$

where q^{-1} is the delay operator. The desired closed loop transfer function is

$$H_m(q^{-1}) = \frac{B_m(q^{-1})}{A_m(q^{-1})} = \frac{(1-p)q^{-k}}{1 - p\, q^{-1}} \qquad (A.13)$$

where p is the closed loop pole and $k \geq d + 1$ is the prediction horizon. The controller may converge to the minimum variance controller if p = 0 and k = d + 1.

The Novatune uses an implicit self tuning algorithm, i.e. the controller parameters are estimated directly from a prediction model. The prediction model without integral action is

$$A_m y = q^{-k}(\hat{R}u + \hat{S}y + \hat{C}f) \qquad (A.14)$$

where k is the prediction horizon, f a feedforward signal, $\hat{R}$, $\hat{S}$ and $\hat{C}$ are estimated polynomials in q^{-1}, i.e.

$$\hat{R}(q^{-1}) = \hat{r}_0 + \hat{r}_1 q^{-1} + \ldots \qquad (A.15)$$

$$\hat{S}(q^{-1}) = \hat{s}_0 + \hat{s}_1 q^{-1} + \ldots \qquad (A.16)$$

$$\hat{C}(q^{-1}) = \hat{c}_0 + \hat{c}_1 q^{-1} + \ldots \qquad (A.16)$$

and $A_m = 1 - p \cdot q^{-1}$ (see A.13). Note that C has nothing to do with coloured noise. The observer polynomial $A_o = 1$, i.e. a dead-beat observer. The degrees of $\hat{S}$ and $\hat{R}$ should be chosen as follows; $\deg(\hat{S}) = n - 1$ and $\deg(\hat{R}) = \deg(\hat{S}) + d$, where d is the time delay. Then the control law is

$$\hat{R}u + \hat{S}y + \hat{C}f = T u_c = (1 - p) u_c \qquad (A.17)$$

where $T = 1 - p$ to obtain correct steady state gain.

If a control law with integral action is desired, the prediction model is modified to

$$(A_m - q^{-k}T)y = q^{-k}(\hat{R}\Delta u + \hat{S}\Delta y + \hat{C}\Delta f) \qquad (A.18)$$

where A_m, T, $\hat{R}$, $\hat{S}$ and $\hat{C}$ are defined above, and Δ denotes taking differences, i.e. $\Delta u = u(t) - u(t-1) = (1 - q^{-1}) u(t)$. Then the control law is

$$\hat{R}\Delta u + \hat{S}\Delta y + \hat{C}\Delta f = T (u_c - y) \qquad (A.19)$$

In both prediction models, (A.14) and (A.18), the left hand sides contain a prediction of the process output y at time t given measurements at time t-k, i.e. $\hat{y}(t \mid t-k)$. The prediction is used at time t to update the parameters by a standard recursive least squares algorithm (see Åström (1983)), with forgetting factor $\lambda = 0.98$.

Introduce the vector $\hat{\theta}(t)$, containing the parameter estimates from time t,

$$\hat{\theta}(t)^T = [\ \hat{r}_0(t)\ \hat{r}_1(t)\ \ldots\ \hat{s}_0(t)\ \ldots\ \hat{c}_0(t)\ \ldots\ ] \qquad (A.20)$$

and a data vector $\phi(t)$ containing observations of u, y and f up till time t - k, i.e.

$$\phi(t)^T = \left[\ u(t-k)\ u(t-k-1)\ \ldots\ y(t-k)\ \ldots\ f(t-k)\ \ldots\ \right] \qquad (A.21)$$

If integral action, (A.18), is used, the variables in (A.21) are replaced by differences Δ.

Then, if k = 1, (A.14) can be written

$$\hat{y}(t\,|\,t-1) = \frac{1}{A_m(q^{-1})}\,\hat{\theta}^T(t-1)\,\phi(t) \qquad (A.22)$$

A similar expression is obtained for (A.18).

The prediction error at time t is

$$\varepsilon(t) = A_m(q^{-1})\left[y(t) - \hat{y}(t\,|\,t-1)\right] = A_m(q^{-1})\left[y(t) - \hat{\theta}^T(t-1)\phi(t)\right] \qquad (A.23)$$

The covariance matrix P is updated

$$P(t) = \frac{1}{\lambda}\left[\ P(t-1) - \frac{P(t-1)\phi(t)\phi^T(t)P(t-1)}{\lambda + \phi^T(t)P(t-1)\phi(t)}\ \right] \qquad (A.24)$$

and new parameter estimates $\hat{\theta}(t)$ are computed

$$\hat{\theta}(t) = \hat{\theta}(t-1) + P(t)\phi(t)\varepsilon(t) \qquad (A.25)$$

The Novatune self-tuning controller does not adapt the parameters $\hat{\theta}$, if $|\Delta u|$, $|\Delta y|$ or $|\varepsilon|$ are less than some limit. In the first two cases no new information has arrived, in the latter case the prediction is already sufficiently good. The adaptation can also be disabled by a logical signal to the self-tuning module.

The control signal can be given maximum and minimum limits, and rate limits in both directions, or rather a maximum increase/decrease per sampling instant. During start-up, the control signal can be limited by an exponentially growing signal. After about 10 samples this limit has been removed. The growing limit can be disabled by a logical signal.

The sampling interval, the prediction horizon, the closed loop pole and the number of parameters can be tuned on the selftuner. Thus it is possible to tune e.g. the prediction horizon and the sampling interval to obtain a good closed loop behaviour. If there is neglected process dynamics, then an increase of the prediction horizon may be favourable.