ISRN LUTMDN/TMFL—04/5032—/SE

Strategy of "Sourcing Purchase" at Tetra Pak GTS AB

- How should this function be integrated in the overall strategy and what kind of suppliers should be used?

Lina Svensson

Department of Design Sciences
Division of Packaging Logistics
Lund University

LUND INSTITUTE
OF TECHNOLOGY
Lund University

Dept. of Design Sciences
Div. of Packaging Logistics

Strategy of "Sourcing Purchase" at Tetra Pak GTS AB

– How should this function be integrated in the overall strategy and what kind of suppliers should be used?

April 2004

Author:
Lina Svensson

Supervisors:
Mats Johnsson, Packaging Logistics, LTH
Robert Merkenius, Tetra Pak GTS AB

Preface

This Master's thesis is the final task of my Master of Science in Industrial Management and Engineering at Lund Institute of Technology (LTH). The thesis encompasses 20 credits from the education's total scope of 180 credits.

The thesis is written within the purchasing area, but has been supervised at the Institution of Packaging Logistics at LTH. I want to thank Mats Johnsson for guiding and supporting me, although it has been a new area for him.

Moreover, I want to thank Robert Merkenius at Tetra Pak GTS AB, who first assigned and then has been supervising this thesis. The way that he has clarified and guided the problem has prevented many unnecessary misunderstandings along the writing process, which I am really grateful for. I would also like to thank all the persons within GTS, as well as the suppliers, that allowed me to interview them. Your opinions have made the valuable and central base of this thesis.

April 2004, Lund, Sweden

Lina Svensson

Abstract

Tetra Pak Global Technical Support AB (GTS) is a company within the Tetra Pak group which main task is to supply the whole world with spare parts for all kinds of Tetra Pak machines. GTS supplies about half a million different parts, which demands a large purchase organisation. This thesis deals with the so-called *Sourcing purchase*, which is a term for purchase of non-forecasted parts that have no specified delivery time or price set.

A Sourcing item could be a part that has never been bought before with an unknown origin supplier, or the part could have a known supplier but, since it hasn't been bought for the last 20 years, this supplier is not suitable anymore. It is characterised by its unpredictable demand and low volume, which also means that there are no large profits for the supplier to make. At the same time, GTS requires fast deliveries, since there is always a customer order behind every Sourcing purchase order.

Sourcing purchase represents as little as 2 % of the total purchase value at GTS, but the work finding suppliers for these parts demands the time of almost one fourth of all operative purchasers. The objective in this thesis has been to identify aspects that enable improvements of the Sourcing purchase process. First, the existing purchasing strategy at GTS was examined with the aim to find ways to include Sourcing in the overall procedures. The second task was to identify the characteristics of a suitable Sourcing supplier. It was also discussed if the idea of having pre-determined suppliers for Sourcing is a good way of solving some of today's problems.

To reach a valid result in the thesis, a broad range of persons, within and outside GTS, was interviewed. The aim was to reflect as many viewpoints as possible, mainly to prevent an outcome only based on management's thoughts. Furthermore, some literature and statistics were studied to strengthen the results.

Since the company does not expect to make any large earnings, time-consuming activities should be avoided when improving the Sourcing process. Instead, GTS should focus on bringing in Sourcing purchase as a natural part of the general strategy. When discussing how to include Sourcing purchasing in the overall purchasing strategy at GTS, the recommendations are, for instance, to include the Sourcing needs in the ongoing supplier-structuring project. Furthermore, the Supplier portal (a web-based tool) and the Assessment system should be developed to better support Sourcing.

When analysing the characteristics of a suitable Sourcing supplier, the strategy based on theoretical studies was to strengthen the negotiation position against the supplier. Using suppliers that already have a high Tetra Pak dependency could solve this problem. Moreover, a flexible organisation and production process is essential when producing small volumes to an acceptable price.

The interviews resulted in many Sourcing supplier requirements. The importance of the criteria differed to some extent between the respondents, but everyone agreed more or less on that high quality, high delivery precision, short lead-times and quick responding times on inquiries were especially important qualities. The answers conflicted, however, in the discussion about how important a low price is for these items.

The next step for GTS to make in the Sourcing case is to decide how to carry out the concept of pre-determined suppliers; should they wait until the overall structuring project is implemented, or should Sourcing start its own structuring work with the aim to make a short-term solution?

Table of Contents

1 Introduction

This first chapter will introduce the background of the thesis. It describes the problem framing, the purpose, and the delimitations of the thesis. Finally, a summary of all chapters in the report is presented.

1.1 Background

Tetra Pak Global Technical Support AB (in the future called GTS) is a division within the Tetra Pak Group. The purpose of the GTS *Parts Supply* within GTS is to supply customers with spare parts for all kinds of Tetra Pak machines. GTS supplies approximately half a million parts of which about 10% are available in stock.

The parts that are not kept in stock are purchased first when a customer puts an order of the specific item. Two different kinds of customer order purchase exist in GTS Part Supply; purchases of items that have a predetermined supplier and items that have not. The latter has, consequently, no specified delivery time or price set. This kind of purchase used to be called OTF Purchase, since purchasers within the Order-To-Fulfilment (OTF) department handled them, but has recently switched department and therefore been renamed to *Sourcing Purchase*.

The number of customer order purchases, Sourcing purchase included, is continuously increasing and requires more and more work. Therefore, an overview of the process is needed, with the aim to identify improvement areas and enhance customer benefit.

Management believes that the process of choosing and finding a supplier for the Sourcing inquiries is too time-consuming. To improve the process, one suggestion is to have pre-determined suppliers for different parts, primarily for the most purchased product groups. This means that if the purchaser gets an inquiry for an aluminium axle, s/he knows exactly which supplier to ask, compared to today's situation where the purchaser sends inquiries to several suppliers.

1.2 Objective

The main objective of this project is to identify aspects that enable further improvement of the Sourcing purchase process, that is, reducing time from customer inquiry to time of delivery and reducing purchase price. There is a belief that pre-determined suppliers for Sourcing purchase would make the process more

efficient, and one sub-objective is therefore to look into different supply chain actors' opinions in this matter.

1.3 Problem framing

The **first task** is to identify possibilities to utilize and align the supplier strategy pursued by GTS Purchasing with the concepts of Sourcing purchasing in order to enable above objectives.

Questions to answer

- How does GTS' present purchasing and supplier strategy work?
- How is the Sourcing purchase concept defined?
- How does this concept align with the overall strategy?
- What can be done to improve the present situation?

The **second task** of the project is to identify if there exists indicators that promote suppliers' suitability of serving as "Sourcing suppliers" to GTS. If so, which are they and is it possible to rank them? Are the currently used suppliers for Sourcing purchasing the most suitable and/or are there other suppliers that could be utilized more?

Questions to answer

- What characterises a Sourcing purchase and what demands does that put on a supplier?
- Examine the opinions of having pre-determined suppliers for Sourcing.
- Which are the most important qualities for a Sourcing supplier according to Literature, Sourcing purchasers, Managers, Other experienced GTS persons, and Suppliers?
- Is it possible to rank these qualities? How will this ranking look like?
- Which are the most frequent used suppliers by the Sourcing purchasers today? Do these suppliers fulfil above demands?

1.4 Focus and Limitations

The research will focus on *drawn components*[1], since the problem finding suitable suppliers for *standard components*[2] is not as extensive. Furthermore, the study is mainly focusing on the link between the supplier and GTS. The interface between GTS and its customer is quite similar, whether the spare part has been purchased by the Sourcing group or by someone else, and is therefore not very interesting to examine.

[1] See concept definition in Appendix 1.

[2] Ibid.

One limitation is the lack of specific theories for this special area, *purchasing strategies for low volume items,* which has also been confirmed by a number of different purchasing experts.

Target Group

The main target group of this thesis is managers and employees within Purchase areas at Tetra Pak GTS AB, but also other managers in the company and students in the final phases at LTH.

Concept definitions

Definitions of specific concepts and expressions used throughout the thesis are presented in Appendix 1.

1.5 Outline of the thesis

The outline of this thesis is built on following structure and chapters:

Introduction

Chapter 1 – Introduction
This first chapter will introduce the background of the thesis. It describes the problem framing, the purpose, and the delimitations of the thesis. Finally, a summary of all chapters in the report is presented.

Chapter 2 – Methodology
The purpose of this chapter is to, from well-known methodological theories, explain the chosen research strategy and methodology of this thesis.

Chapter 3 – Tetra Pak GTS AB
This chapter introduces the company, Tetra Pak GTS AB, and its strategic purchasing function. Moreover, the Sourcing purchasing process is presented and explained to get a basic understanding of the thesis' topic.

Theoretical studies

Chapter 4 – Purchasing/supplier strategy
The following two chapters describe, for the thesis relevant, theories. They are based on literature studies and will work, together with the empirical chapters, as a ground to this thesis' analysis. This first theoretical chapter presents general theories and trends of purchasing and supplier strategies, based on literature and article studies.

Chapter 5 – Manufacturing strategy
This chapter presents trends and theories within the manufacturing strategic area, with the aim to improve the understanding of what manufacturing methods that could be suitable for Sourcing items.

Empirical studies

Chapter 6 – Supplier projects by Tetra Pak GTS
The following two chapters describe the empirical study made in this thesis. The results are mainly built on interviews with experienced GTS persons and suppliers. This first empirical chapter briefly presents two previous and one ongoing supplier project at GTS with the aim to consider the good ideas they brought and also to get an understanding of the difficulties involved.

Chapter 7 – Sourcing purchasing
This chapter presents the results based on statistical studies and interviews, both internal and external. The aim is to investigate opinions about the current Sourcing situation as well as thoughts about future Sourcing approaches.

Analysis and conclusions

Chapter 8 – Analysis
This chapter presents the analysis, based on the previous theoretical and empirical chapters. The analysis discuss how the collected factors are influencing each other, and which possible solutions that exist for the thesis' two main questions. All elements in the analysis are carefully described, to make it possible for the reader to review the facts and draw his/her own conclusions.

Chapter 9 – Conclusions/Recommendations
This chapter summarises the most important statements and conclusions from the chapter of analysis. Furthermore, the author presents her own suggestions and recommendations to the company. Finally, a discussion about the results and its generalisation possibilities are made.

2 Methodology

The purpose of this chapter is to, from well-known methodological theories, explain the chosen research strategy and methodology of this thesis.

2.1 The research process

When analysing a research method, some of the most commonly used theories of science are the system approach, the actor approach and the positivist approach. This thesis is marked by the system approach.

According to Wallén (1996), the System approach arise from the need of *"follow, understand, and plan for growth and change in complex connections, where a number of factors interact with each other"*. One key area for the system approach concerns organisation and planning of activities, where the interaction and structure of processes and events are studied. *"The whole is more than the sum of the parts"* is a usable expression that illustrates the fact that the system approach is a discipline, which purpose is to view the whole of a problem.[3]

The Sourcing purchase system within GTS can be seen as a part of larger systems (see Figure 2.1). The Sourcing system is to a great extent affected by its surroundings and my role in this research process has been to collect data and opinions from as many sources as possible, to get an overall view of the task.

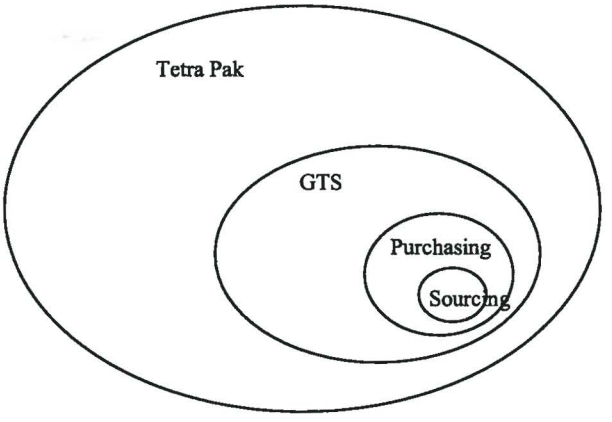

Figure 2.1 ***The Sourcing purchase system as a part of larger systems.***

2.2 Data collection

Below follows a presentation of the data collection methods used in this thesis. Moreover, the validity, reliability, and objectivity of the data are discussed.

---

[3] Wallén Göran, *Vetenskapsteori och forskningsmetodik,* Second edition, Studentlitteratur, Lund, 1996.

2.2.1 Qualitative data

The qualitative method is an approach characterised by the author's closeness to the research object. This thesis is mainly based on qualitative methods such as interviews and literature studies. However, due to the lack of precise theories in the area, the interviews is the most important source of information which the analysis and recommendations will be based on.

One important issue to consider when making an interview is that the questions must be designed to provide needed information. Furthermore, a lot of effort must be made to choose question areas and make the questions precise. Leading questions should be avoided. To make the process more efficient, an idea of how to analyse the answers must exist from the very beginning.

The pro of this method is its flexibility. The interviewer can add follow-up questions and the answers can be developed and entered more deeply, compared to, for instance, a questionnaire. The con of the interview method is the fact that it is quite time-consuming. Also, answers can be difficult to analyse, why follow-up meetings often are needed.

An interview can be documented by recording it or by taking notes. It is time-consuming to print an interview after recording it, but useful if you want to double-check your notes or quote parts of the interview. Making notes is a fast and simple way of documenting an interview but there is, however, a major risk of losing valuable information when you must both listen and write at the same time.[4]

Interviews in this thesis

The interviews in this thesis can be divided into internal (within GTS) and external.

- **Internal interviews**
  - *Sourcing purchasers.* It is important to get the views from the persons who are actually working within the area every day. They can answer on which characteristics a supplier needs to make the operative, every day work run.
  - *Management.* In the end, it is management who makes the strategic decisions in the company. It is therefore essential to get an idea of where management will put focus now and in the future, and on which basis the choices will be made.
  - *Others.* To get a broader view of the problem, other experienced persons within the company were interviewed. In this case, persons with different supplier and purchasing knowledge have been consulted.

[4] Bell Judith, *"Introduktion till forskningsmetodik"*, Second edition, Studentlitteratur, Lund, 1995.

- **External interviews**

The external interviews consist of supplier interviews. It is interesting to get an idea of what the suppliers think of Sourcing purchase and low series manufacturing in general and what characteristics they believe is necessary to work as a good Sourcing supplier. The four interviewed suppliers is a selection of today frequently used Sourcing suppliers. The persons interviewed are ones with long experience of production as well as price calculation and quotation issuing.

All interviews were recorded and then written down, in order to keep as much information as possible. This method is time-consuming, but has shown being the most appropriate for the author. The questions that were asked can be found in Appendix 2 and Appendix 3.

Document studies in this thesis

The literature studies in this thesis are mainly focused on purchasing and manufacturing strategies. The aim is to develop the author's knowledge. Furthermore, the theories should work as a complement to the empirical results and thus strengthen the reliability of the analysis.

2.2.2 Quantitative data

Quantitative data is data that becomes reliable due to its repetitiveness. Examples of such data are statistics and questionnaires. Statistics is a good way of securing facts without putting any valuations to the result. If asking the same question to a lot of persons, the interviews can be compared to a questionnaire and, to some extent, be seen as quantitative data.

The questionnaire must be designed to provide needed information. Furthermore, it should be designed to make sure that answers could be easily analysed and interpreted. A lot of effort must be made to choose question areas, make the questions clear, test the questionnaire and make sure that answers are returned. An idea how to analyse the answers must exist from the very beginning of the process. The advantage of the questionnaire method, ahead of the interviewing method, is that it is a good form to collect a certain type of information in a fast and cheap way, providing the people answering interpret the questions similarly as the author.[5]

Quantitative data in this thesis

The statistics in this thesis have mainly been used to get an overview of the most frequently used Sourcing suppliers today. The questionnaire method has been used to investigate if it is possible to rank the Sourcing supplier criteria, and to get an idea of the most important characteristics.

---

[5] Bell Judith, *"Introduktion till forskningsmetodik"*, Second edition, Studentlitteratur, Lund, 1995.

2.2.3 Validity

Reaching a high validity means that a thesis is based on correct information and data. To secure a valid result in this thesis, a broad range of persons was interviewed (as mentioned in section 2.2.1). The aim was to reflect as many viewpoints as possible, mainly to prevent a result only based on management's thoughts. Furthermore, the interviews were recorded, documented and saved by the author, to make it possible for other persons to view them afterwards.

2.2.4 Reliability

The questions that arise when discussing the reliability of the thesis are if the information can be trusted and if the same results would appear if the study were made again.

To secure the reliability, 19 persons from a number of different departments and areas were interviewed. All interviews were recorded and afterwards documented to avoid information being lost or wrongly reconstructed. One thing that perhaps could change the outcome of this thesis is if other persons or more persons were interviewed.

2.2.5 Objectivity

The Author's, i.e. my own, objectivity could also be interesting to discuss, since I have been working within the company before and during the writing of this thesis. It is likely that my work at GTS has affected me in many ways, but it is hard to say if it has influenced the results of this thesis or not. It is possible that the picture that I already had of the interviewed persons unwarily affected which results I have chosen to promote and recommend. It is also easy to accidentally ask leading questions and thus risk the thesis' objectivity. I have, however, tried to be open-minded and aware of these risks and have presented as many different opinions as I could, to make it possible for the reader to make his/her own analysis.

Another critical part in the thesis was the supplier's objectivity, since only company owners were interviewed. There is a risk that these persons are too subjective and focused on making a good impression of their own business (perhaps better than it actually works), that real facts to some extent are neglected. I had to take this into consideration when publishing their comments. Though, this was not only a matter for the external interviews. It is also very likely that the GTS persons, maybe unaware, answered in a way that protects the interests of their own positions or departments. These differences appear, however, in all organisations and should perhaps not be seen as a problem, but as an opportunity to get as many views of the task as possible.

3 Tetra Pak GTS AB

This chapter introduces the company, Tetra Pak GTS AB, and its strategic purchasing function. Moreover, the Sourcing purchasing process is presented and explained to get a basic understanding of the thesis' topic.

3.1 Company background

Tetra Pak Global Technical Support AB (TP GTS AB) is a division within the Tetra Pak group. The role of GTS is to provide global technical support to customers and local service organisations. This involves:

- Technical competence development.
- Fulfil customer needs by providing Global Service Products.
- Provide time- and cost-effective parts.
- Design and deploy processes, methods, and tools for effective customer system performance management.

More than 400 persons work within Global Technical Support whereof around 350 are based in Lund. The warehouse in Lund is mainly supplying the European market. To be able to provide fast delivery of spare parts to the rest of the world, GTS also has operations in Dubai (UAE), Hochheim (Germany), Modena (Italy), Singapore, and Greenwood and Minneapolis (USA). The fast access of spare parts is GTS' most important issue, since a machine breakdown could cost the customer a fortune.[6]

GTS Parts Supply[7]

The unit called Parts Supply within GTS has the task to design and implement a single process from supplier to end-user. The aim is to increase availability of spare parts, reduce cost and optimise stock levels. The customer is offered the possibility of single sourcing, a sales channel for full assortment throughout the whole lifecycle of the machine, as well as competence. GTS Parts Supply consists of the following departments:

- *Lund DC Operations (Central Store)* – Handling the physical warehousing and planning.
- *Procurement & Sales Administration* – Including order handling, procurement of all items, and stock control management.
- *Regional Distribution Centres Operations* – Managing the distribution centres outside Lund.
- *Rotation Unit & Claims handling.*
- *Supply Chain Management & Continuous Improvements* – Supporting GTS Parts Supply, but also global projects, with strategic and supportive functions.

---

[6] GTS internal web.

[7] Larsson Matts, *Parts Supply Chain – General Presentation*, 2003-03-14.

Some Parts Supply key figures are presented in Table 3.1.

Table 3.1 ***Key figures – Parts Supply (December 2002, Lund only)***

Number of employees	262
Number of articles handled/year	72 000
Number of articles in stock	56 000
Number of deliveries to PS/year	124 500
Number of picks generated by deliveries/year	179 000
Number of articles in database	523 000
Number of shipments/year	122 980
Number of picked order lines/year	970 399

3.2 GTS Purchasing

GTS purchasing makes all the strategic purchasing decisions at GTS. It supports not only the purchasing functions within GTS but is also more and more becoming a part of the global decision making at Tetra Pak. One future objective is to be able to influence the choice of parts and suppliers in the initial stages of a machine development, to avoid a further escalating number of different spare parts and suppliers. This chapter will present some strategic focuses within GTS purchasing and also describe some topical concepts, relevant for the further discussions.

3.2.1 Strategic focus

GTS has today about 950 suppliers. The strategic focus is at the moment concentrated on a number of areas, the most important ones presented below:

- *Delivery precision.* This is always a task of current interest. If the suppliers cannot keep their promises, GTS will, in its turn, lose its own customer's confidence.
- *Contracts.* The aim is that all suppliers with a purchase value above a certain level should be put under contract, to improve the overall control regarding delivery time and price. This means among other things that GTS has the right to demand a penalty fee from a supplier, which does not fulfil its contract.
- *Supplier reduction.* GTS purchasing wants to reduce the total no of suppliers from today's 950 to 500 before year 2007 and, in the same time, double the purchasing value per supplier. The number of drawn component suppliers should be decreased from about 240 to 120 suppliers.
- *Supplier structuring.* As a part of the supplier reduction process, the suppliers should be structured by criteria such as type of spare part and material. This is to avoid having too many suppliers in the same segment (See also chapter 6.3).

Another focused strategic area is to review the classification of items, to be able to find a correct and well functioning structure. Moreover, to simplify the overall purchasing work and to get a better view of the suppliers, GTS purchasing also

focuses on expanding the Supplier Portal – a web based tool where GTS employees and suppliers can find contracts, price lists, delivery performance, supplier core competence, etc.[8]

3.2.2 System supplier

A system supplier is a supplier that is contracted to deliver complete modules for the Tetra machines. Some system suppliers have their own production, while some of them only assemble parts, purchased from different sub suppliers.

GTS purchases not only modules but also spare parts from the system suppliers. GTS can get benefit from the lower price that comes with the greater volumes that the system supplier buys, but the risk is that administration, transportation, and other costs spoil this profit. Tetra Pak has no real control of these costs and one aim is therefore to buy spare parts directly from the original producer. Tetra Pak also wants to create component contracts to be able to influence the system suppliers' choice of sub suppliers.

The system suppliers are also frequently used within the Sourcing purchasing group. One reason for this is the fact that it is an easy way of finding a spare part. The choice is good if it is a new product that the system supplier produces or keeps in stock.[9]

3.2.3 Supplier assessment

As a part of the ongoing supplier development project, a supplier assessment system has been worked out. By assessing and evaluating a supplier, GTS' aim is to get the suppliers to realise their weaknesses and thus reach a better performance in a long-term view. It is also a way of indicating if a supplier should be phased out or not.

Today, the project involves 55 of the largest/most critical key suppliers. For drawn component suppliers, the focus is mainly set on:

- *Continuous improvement.* What system does the supplier have, how committed is management, and how aware is the supplier of its customers' needs?
- *Visual management.* It is important that the flow and stock is visual and that the layout is well considered.
- *Loss intelligence.* The supplier should identify losses in its organisation, preferably with the Toyotism's "7 wastes"[10] in mind.
- *Consumption-based production.* The supplier should preferably not produce to stock (push), but instead produce against an actual need (pull).

---

[8] Carlsson Peter, *Long term direction Strategic focus 2003*, 2003-03-21, and interviews with GTS Purchasing persons, November 2003 and January 2004.

[9] Interviews with different GTS persons.

[10] *Kompendium i Produktionsledning för I-avslutningen*, Avd. för Produktionsekonomi vid Lunds Tekniska Högskola, KFS i Lund AB, 2001.

The assessment is made every second year and focuses on the supplier's global performance, i.e., not only for GTS' spare parts but also for the machine production. Depending on how well the supplier fulfils different criteria, a score between 1 and 5 is given. The scores are also weighed due to its importance, which finally leads to a final score. This score together with an evaluation of the supplier's actual performance will then show the real outcome; if it should be positioned as a preferred supplier, if there are improvement areas to work with, or if it is of current interest to phase out the supplier. A few examples from the assessment checklist of criteria concerning the production, and also the requirements put by GTS to reach the highest level, follow in Table 3.2.

Table 3.2 ***A selection of Assessment checklist criteria***

Criteria	To fulfil level 5 the supplier should have:
Plan of investments	• New equipment designed with suppliers in order to optimize performances; all historical modifications are fed back to machine supplier.
Improving production method	• Systematic method development with clear and documented result. • Resources for method development are integrated in the daily business. • Continuous benchmarking in the area of production method development. • Improvement results are shared with the customer.
Material management	• Minimum lot policy towards one-piece flow is implemented inside and outside. • Flexibility requirements have been met by enhancing also supplier flexibility.
"Streamlined" production	• The entire production is streamlined and adapted to continuously changing product mix and needs. • Consideration and optimisation to batch sizes, planning points and lead times.

Since it is impossible to accomplish the extensive assessment procedure on everyone, the rest of the suppliers are only measured after their GTS performance. GTS has however some basic requirements on a supplier and to know if these are fulfilled, the supplier can fill the Pre-requirements questionnaire, shown in Appendix 6. The questionnaire tells for instance that a low turnover to Tetra Pak (<40%) is preferable to a higher Tetra Pak dependency, which must not exceed 60%. Moreover, a supplier must be ISO 9001 certified, have knowledge about technical standards, work with environmental issues, and be able to communicate through e-mail and Internet. [11]

[11] Interview with and material by Ola Holmqvist, Tetra Pak GTS AB, 2004-02-23.

3.3 The Sourcing purchasing process

Five persons (from a total of approximately 20 operative purchasers) are working with Sourcing Purchase. The purchases made by the Sourcing group represent about 2% of GTS total purchase amount. GTS' aim is to provide its customer with a delivery time of approximately 4 weeks for this kind of non-forecasted parts. The Sourcing purchase process is explained below and can also be overviewed in Appendix 4.[12]

1. Purchase request

The Sourcing purchaser gets a purchase request (an order is placed or a customer has an inquiry) for a non-forecasted part. This part could be a part that has never been bought before with an unknown origin supplier, or the part could have a known supplier but since it hasn't been bought for the last 20 years, this supplier is not suitable anymore. It can also be parts that are not linked as spare parts, for instance a door.

2. Identify supplier

There are a number of ways of finding a supplier for a specific part. The first option is to just look into the system and see if the item has been bought before. This can be found in different R/3 or web based tools such as the *Material Master*, *AS400/SAP 4.5*, *PIV* and in the *Purchase order List by Material*. If there's no information or notes what so ever about the part in any of these systems, the next step is to study the drawing.

From the drawing, the Sourcing purchaser can identify what type and what kind of material the part represents. The choice of supplier can then be based on:

1. *Experience.* If a similar part has been bought before, it is likely that the same supplier can produce this part as well.
2. An old list of *Family suppliers* (see chapter 6.1), which shows different suppliers' specialties, for instance manufacturing competences such as turning and milling, or material competences such as sheet metal, rubber, etc.
3. If it is a new part, it is likely that the *System supplier* (see chapter 3.2.2) can deliver the part. This is often a more cost-effective alternative, since the part is currently used in production.
4. The last option is to ask the *product owner* (the person who is responsible for a specific system) for help. He can also tell if the item has been cancelled or replaced by a similar part.

[12] Martinsson Linda, *OTF Process Mapping*, 2003-10-30 and Interviews with Sourcing purchasers, November 2003.

3. Inquiry

Inquiries are sent by fax, together with the drawing of the part, to between 1-3 suppliers, depending on how sure the purchaser is of where to get the best offer in terms of price and lead-time.

4. Quotation

The supplier returns with a quotation, preferably within three working days. It is then up to the purchaser, whether to accept it or not.

The method of price calculation[13], made by the supplier, is more or less time-consuming depending on the complexity of the part. If the part for instance is similar to a part that the supplier already produces, it is easy to just look at the cost estimate for that specific part and, if needed, make small adjustments. On the other hand, if it is a whole new construction, the supplier must make more careful calculations. Some suppliers use templates with different factors to calculate the price, while others only stick to experience. The price depends on many different factors[14], some of them listed below:

- *Material.* The price of raw material is often changing, depending on market demand and supply. An example is stainless steel, where the supply of nickel is the largest price factor.
- *Machine time.* Every element of the manufacturing process, such as cutting, turning, milling, assembling, etc. takes time. The total time will then be multiplied with the machine cost.
- *Cutting data.* It is also important to identify cutting data, since these can tell if the machine has to work in a lower speed or if tool changes are needed.
- *Tolerance.* If the tolerances are tight, it might be necessary to involve measure stops, which affects the time and thus the price.
- *Sub suppliers.* The price of the part, and also the responding time to the Sourcing purchaser, is very much dependent on how much of the work that has to be bought from the supplier's supplier, since the supplier, in his turn, must wait for quotations.
- *Surface treatment.* Surface treatments can affect the price a lot, especially for low quantity manufacturing, since set-up costs for a treatment can attain a couple of hundred SEK.
- *Transportation costs.* Using local suppliers means lower transport costs in general.
- *Indirect costs.* These can often be divided into general management costs and sales costs.

---

[13] Supplier interviews, January & February 2004.

[14] Ibid and van Weele Arjan J, *Purchasing and supply chain management*, Third edition, Thomson Learning, London, 2002.

For simple parts, the procedure of calculating a price can take about an hour. However, the responding time of three days can easily be exceeded if the part is very complex, or if the supplier simply priorities other work.

It is preferable if the supplier answers with a split price, per piece and for the set-up. Just mentioning a price per piece can lead to too high prices in the system if the quantity rises later on. As a general rule, the higher the share of fixed costs of the end product, the lower the price per unit gets by enlarging the order volume.

5. Quotation accepted

The price and delivery time is registered in GTS' computer system SAP R/3 and the customer is then informed about price and lead-time. If a supplier has not returned with an answer quickly enough, it is possible to register his information afterwards, if the offer is better than the first one.

6. Order

An order (if it exists) is sent to the supplier, who returns with an order confirmation. The purchaser can then, in urgent cases, ask the supplier to shorten the delivery time if possible.

7. Receiving goods

Goods are received and sent to the customer as soon as possible. If the delivery is delayed, it is the purchasers' responsibility to contact the supplier and trace the goods.

3.4 The complexity of purchasing at GTS

All organisations have their own characteristics that make the purchase pattern unique in almost every case. Some explanations to help understand why GTS' purchasing situation is so complex follow below:[15]

- The whole organisation within the Tetra Pak group is decentralised. One consequence of that is that a lot of persons in different Tetra Pak companies is authorised to choose and introduce new items and suppliers, which in the end leads to a more complex purchasing process for GTS.
- The amount of different parts makes the purchase process very complex. It is not common that a company has half a million items in its component database, and that 70,000-80,000 different parts are sold every year, as in GTS' case.
- A machine's lifetime is often several decades and, as long as the machine runs, the customer will hopefully continue buying its packaging material from Tetra Pak. It is therefore in Tetra Pak's interest to provide spare parts for all old machines.

[15] Interviews with different GTS persons.

- The lack of control in a machine's development stages makes it possible for a spare part to have many different article numbers. This result further in that the same part could be bought from many different suppliers.
- Customers are to a greater extent implementing the same business system as Tetra Pak (SAP R/3), which means that it gets easier for them to purchase from GTS. The result is an increasing amount of customer orders.

4 Purchasing and Supplier strategies

The following two chapters describe, for the thesis relevant, theories. They are based on literature studies and will work, together with the empirical chapters, as a ground to this thesis' analysis. This first theoretical chapter presents general theories and trends of purchasing and supplier strategies, based on literature and article studies.

4.1 Customer/supplier relationship

The change of the competitive situation in the world during the last decades has resulted in a number of new strategic trends in the industry. One major trend is to strengthen the relationship with the supplier and move from the traditional two-part relationship towards partnership.

The traditional view

The traditional way for customers and suppliers to relate to each other is as two different actors, a so-called two-part relationship. This can, in a simplified version, be characterised as:

- The customer and the supplier having a competitive relationship. It is with the supply chain's profit margin that all actors are competing.
- It is about a win or lose situation for both parties.
- The parties, respectively, try to reduce the strength of and avoid being dependent on the opponent. For the customer, this results in wanting many suppliers and low phase-out costs. It is also desirable, from the customer's point of view, not to committing to long contracts. The supplier, on the other hand, tries to avoid too dominant customers that generate dependency. The supplier also tries to make deals with its customers, leading to as high phase-out costs as possible.

The long-term risk with this traditional strategy is a non-developing supplier market. The sharp focus on price results in decreased margins and fewer conditions to develop a competitive ability. Effectiveness in the supply chain based on cooperation between different actors does not match with this traditional view.

Partnership

During the 80s, a new way of relations between customers and suppliers developed. It was based on partnership and can be characterised as:

- The customer and the supplier having a partner-based relationship.
- It is about a win/win situation for both parties.
- The parties try to increase the total competitiveness of the supply chain with the aim to raise the profit margins for both actors.

Long agreements are in favour of both parties and the purpose is rather to increase the dependency in the relationship than the opposite. This dependency also means a risk, if the "wrong" partner is chosen. The level of this risk is varying depending on the type of connection. If the relationship for instance includes activities such as marketing and product development, the risk becomes much higher compared to a cooperation only sharing material flow related activities. [16]

4.2 *Kraljic's* matrix

When designing product strategies, the approach originally suggested by Kraljic (1983)[17] is recommended. The main idea is that different strategies should be developed towards the suppliers, since they represent different interests to the company. A good way is to start identifying the present purchasing pattern, using the "20-80 rule"; 20% of the products and the suppliers will often represent about 80% of purchasing turnover. This rule also reveals the usually large amount of small items and suppliers, who generally represent 80% of the company's internal handling costs. Improving these areas will result in the highest profit.

The purchasing turnover and the supplier base are analysed based on two variables: The *purchasing impact on financial results* is measured against criteria such as material costs, volume purchased, importance for the products customer value, etc. The higher the volume or value of the products that are involved, the higher is the impact of purchasing on financial results. A big *supply risk* appears when sourcing a product from just one supplier, without an alternative source. On the other hand, supply risk is low when a product can be sourced from many suppliers (as long as switching costs are low). Other criteria are availability, competitive structure, and storage risks.

A combination of these variables results in a matrix with four quadrants; *Strategic products/suppliers, leverage products/suppliers, bottleneck products/suppliers and routine products/suppliers*. For every segment of the portfolio, a different strategy is possible. The purchasing product and supplier portfolios are illustrated in Figure 4.1.

[16] Mattson Stig-Arne, *Logistik i försörjningskedjor*, Studentlitteratur, Lund, 2002.

[17] van Weele Arjan J, *Purchasing and supply chain management*, Third edition, Thomson Learning, London, 2002.

Purchasing impact on financial results (High / Low)	Low Supply Risk	High Supply Risk
High	**Leverage products** • Alternative sources of supply available • Substitution possible → Competitive bidding	**Strategic products** • Critical for product's cost price • Dependence on supplier → Performance based partnership
Low	**Routine products** • Large product variety • High logistics complexity • Labour intensive → Systems contracting, E-commerce solutions	**Bottleneck products** • Monopolistic market • Large entry barriers → Secure supply, search for alternatives

Supplier impact on financial results (High / Low)	Low Supply Risk	High Supply Risk
High	**Leverage suppliers** • Many competitors • Commodity products → Buyer dominated segment	**Strategic suppliers** • Market leaders • Specific know-how → Balance of power may differ among buyer-supplier
Low	**Routine suppliers** • Large supply • Many suppliers with dependent position → Reduce number of suppliers	**Bottleneck suppliers** • Technology leaders • Few, if any, alternative suppliers → Supplier dominated segment

Figure 4.1 ***Purchasing product portfolio and supplier portfolio***

The *Bottleneck product* quadrant is the one of current interest in this thesis and is therefore the only concept that will be further described. Bottleneck products are items that represent a limited value in terms of money and volume, but they can be vulnerable to the company due to the lack of supply. The product can often only be acquired from one supplier. Generally, the supplier is the dominant part in this relationship, which may result in higher prices, longer delivery time and reduced service.

The purchasing policy regarding Bottleneck products focuses on making the continuity of supply safe. If necessary, this can be done at additional cost. But, the

company should also work on reducing its dependence on these suppliers and try to move towards the Routine products. To improve the position against these suppliers, the company should:

- Make a risk analysis to explain the risks of not getting these parts.
- Determine ranking among the suppliers customers to clarify how their own interests are prioritised.
- Develop preventative measures, such as buffer stock.
- Search for alternative products/suppliers.

4.3 Spare part strategies

Spare part inventory management is often considered as a special case of general inventory management with some specific characteristics, such as very low demand volumes. The main objective of any inventory management system is to reach an adequate service level with lowest possible inventory investments and administrative costs.

When analysing different strategies for the logistics management, it is necessary to look into the different control characteristics of spare parts. From the suppliers' point of view the strategy can describe what level of service are to be offered and whether customers are segmented and prioritised in terms of service or not. The customer's main concern is how to assure availability and quality of parts with reasonable costs including different supply strategies.[18]

Operational control characteristics

Huiskonen (2001) describes four operational control characteristics of spare parts, which can be used when analysing suitable strategies:

- *Criticality*. The criticality of a part is related to the consequences caused by the failure of delivering a part in time. The criticality of a part could, for instance, be evaluated by the downtime costs of the process. It can also be measured as a time dimension, where the most critically spares has to be supplied immediately. In some cases the failure can be tolerated with temporary arrangements for a short period of time and, in the least critically situations, they can be supplied after a longer period of time.
- *Specificity*. Spare parts can often be divided into standard parts, which are widely used by many customers and often available from several suppliers, and special parts, used by a particular user only. The availability of standard parts is often good. The volumes are often large and stocks exist at different levels in the supply chain. However, for the user-specific parts, the suppliers are often unwilling to stock the special, low volume parts.

[18] Huiskonen Janne, *Maintenance spare parts logistics: Special characteristics and strategic choices,* Internal Journal of Production Economics 71, Issn: 09255273, Elsevier Science, 2001.

- *Demand pattern.* Spare parts are special in such a way that there is often a large amount of parts with a very low and irregular demand, which makes the process more difficult to control and has to be covered by safety stocks. Furthermore, low volumes do not attract suppliers to offer special services.
- *Value.* A high value makes stocking a non-attractive solution for all actors in the logistics chain. The parties have to find solutions other than stock holding. On the other hand, when stocking low price items, the process must be efficient enough so that administration costs do not take unreasonable proportions compared to the value of the parts.

Strategies for developing maintenance spare parts logistics

To analyse different situations and find suitable strategies, the criteria above can be combined. Table 4.1 presents a matrix of some of the possible situations. It is however important to make continuous efforts identifying the most restrictive characteristics of the system and adjusting the strategies to match the changed conditions.

Table 4.1 ***Categorisation of control situations and respective strategies/policies***

		Criticality	
		Low	*High*
Standard parts	**Value** *Low*	• Order processing simplified • Outsourcing of inventory control to a supplier	• User's decentralised safety stocks and generous lot-sizes
	Value *High*	• Stock pushed back to the supplier	• Optimised user's safety stock • Time-guaranteed supplies from service company (for lower and irregular demand)
User-specific parts		• User's own safety stock + partnership with local suppliers to shorten lead times, to increase dependability, and get priorities in emergency situations • In the long run, standardisation of parts when possible	

4.4 Sourcing strategies in theory

Over the past few years many companies have concentrated its sourcing strategy on reducing the number of suppliers. However, this process should not be considered as a goal in itself. Preferably, it should be seen as a way of reducing costs and complexity. Following questions should be reflected:

- For which products should the number of suppliers be reduced?
- For which products should the current number of suppliers be maintained?
- For which products should the number of suppliers be increased?

To answer these questions, the portfolio technique described in chapter 4.2 could be a first step. After that, the strategy should describe which kind of supplier relationship that needs to be pursued for different products. Approaches to take into consideration are summarised in Table 4.2.

Table 4.2 ***Sourcing strategies***

Single sourcing	Vs.	Multiple sourcing
• Production of small series of complex components with high tooling costs • Products that need to be delivered with very short lead times • The company becomes more dependent of the supplier and risks losing contact with the supply market • It's easier for the supplier to open up since he fears no competition		• Supply risk is generally less when the same product can be sourced from more than one supplier
Global sourcing	**Vs.**	**Local sourcing**
• Bulk/standardised products • Large price differences among suppliers for the same products • When products can be bought in large quantities to compensate for transport costs		• High-tech product with an often changing specification • When delivery requires high flexibility and precision • When intensive personal communication is needed in the relationship

Single sourcing means that only one supplier per product or product group is used, compared to multiple sourcing, which uses many suppliers. Local sourcing means that suppliers within a near area are used, compared to global sourcing, which means that suppliers all around the world are used.

Regarding single or multiple sourcing, most large companies prefer a multiple sourced strategy in order to have more than one alternative. It is, however, common that one specific supplier is responsible for one particular item within a product group. The decision about choosing global or local sourcing should always be based on a total cost view. [19]

4.5 Pricing methods

When discussing if a price should be increased or decreased, it is essential to know which factors that control the price. This chapter brings some of these factors, as well as different pricing methods that can also affect the result. [20]

Pricing factors

When the supplier is setting a price for an item, a lot of factors have to be considered, a few of them are listed below:

---

[19] van Weele Arjan J, *Purchasing and supply chain management*, Third edition, Thomson Learning, London, 2002.

[20] Ibid.

- *The expected demand for the product.* The price often increases when the demand is high.
- *The number of competitors.* A monopolist is quite free to determine the selling price. This is, however, a rare situation and the most common situation is that suppliers will look to their competitors' prices when setting their own.
- *The expected development of the cost price per product unit.* Large quantity production makes low prices possible. The supplier must therefore take into consideration if it expects the volume to increase in the future.
- *The customer's order volume.* Suppliers are often willing to make price compromises in exchange for a promise of more business in the future.
- *The importance of the customer to the supplier.* To get access to the largest and most well reputed customers, suppliers often charge lower prices in the beginning of a relationship. However, they will try to bring back "normal" prices after a while.
- *The value of the product to the customer.* In some cases, products are especially critical for the customer and its production. It is not unusual that the supplier charges higher prices for these critical items.

Other, more manufacturing related factors are presented in section 3.3 (quotations).

Pricing methods

When calculating the price, a number of methods can be used. The most common and simple way of setting a price is by adding a fixed percentage mark-up to the cost price. This method does not consider the competitors' prices. It is also usable when the seller does not know about the real demand for the product. Prices can also be based on how much profit that should be made. Using this method, it is necessary that the supplier knows which potential total volume that could be sold. A third method is to follow the competitor's (for smaller companies, the market leader's) pricing actions.

Discounts

For industrial products, discount policies are common. Examples of this are cash discount, which gives the buyer discount if he pays quickly, geographical discount, given to close located buyers who does not require long transportation, and promotional discount, which provides a temporarily low price of a product to stimulate the sale.

A common discount is the quantity discount. Small orders often require the same amount of work and administration as big orders. This means a higher cost per product for small orders and suppliers therefore use discounts to favour high volume orders. The customer must, however, compare the discount to the cost of having more parts in stock and the risk of scrapping.

5 Manufacturing strategies

This chapter presents trends and theories within the manufacturing strategic area, with the aim to improve the understanding of what manufacturing methods that could be suitable for Sourcing items.

5.1 Trends

The changed competitive situation in the industry worldwide requires a focus of core activities. Specialist activities outside these core activities are increasingly outsourced. This is essential if the company should be able to build up a sustainable competitive advantage in the end-user market. However, many entrepreneurs have a hard time in making a choice. They want everything – very high quality and high customer service at the lowest price – at the same time.[21]

The development and the changes that continuously occur affect the company's association with its customers and suppliers. Some of these important changes are presented below:

- *Centralisation.* A concentration towards fewer and bigger production units has been going on for several years within most industries. This development is mainly driven by the achieved economy of scale.
- *Customer orientation.* The growing globalisation leads to an increasing competition, which forces companies to work with a wider range of products. To avoid too big stocks and trouble storing the right things, the manufacturing trend has moved towards more standardised and modularised products. Products, ordered as a result of direct customer need, demand a customer ordered production. However, the trend converges to this kind of production even for standard products. This is a way of avoiding unnecessary inventory and also to be more flexible when customer demand is changing. The development is characterised by just-in time philosophy and is an effect of the demand of only deliver quantities that have an actually need, not possible future needs.
- *Demand for shorter delivery time.* Short delivery time enables better competition ability as well as possibilities to charge higher prices. [22]

5.2 Process choice

When a business is choosing a proper way to manufacture its products, there are a number of steps to take into consideration. Firstly, it must decide how much to buy from outside and how much to manufacture within the company. Secondly, it

---

[21] van Weele Arjan J, *Purchasing and supply chain management*, Third edition, Thomson Learning, London, 2002.

[22] Mattson Stig-Arne, *Logistik i försörjningskedjor*, Studentlitteratur, Lund, 2002.

should identify the appropriate engineering-technology alternatives to combine the make-in components with the bought-out items with the aim to produce the final product specification. Finally, the company has to choose between alternative manufacturing methods. When making this selection, it is also important to consider existing market strategy and which volumes that are of current interest for the different products.

Table 5.1 below shows a selected number of typical characteristics that appear when choosing one process ahead of another. [23]

Table 5.1 ***Selected business implications of process choice.***

Aspects	Jobbing	Batch	Line
Type of products	Special	→	Standard
Product range	Wide	→	Narrow
Customer order size	Small	→	Large
Level of product change required	High	→	Low
Order-winners	Delivery speed /Unique design	→	Price
Qualifiers	Price/On-time delivery /Quality	→	Design/On-time delivery /Quality
Process flexibility	High	→	Low
Production volumes	Low	→	High
Personnel skills	High	→	Low

Jobbing, or one-piece manufacturing, is characterised by small volumes, special customer orders and flexible equipment. Product examples are larger machines, special tools, fixtures, prototypes, etc. Batch manufacturing manages medium-sized series of similar products and is often produced towards stock. Examples of such products are half fabricates, tools, books, etc. Finally, line manufacturing is characterised by a continuous, fast production of one product. In the manufacturing industry, this can for instance be household items and paper sheet. Line manufacturing is also used in the process industry for provisions, oil, chemicals, etc.[24]

[23] Hill Terry, *Manufacturing Strategy*, Second edition, Palgrave, New York, 2000.

[24] Rundqvist Thomas et al, *Kompendium Tillverkningssystem*, Institutionen för Mekanisk Teknologi och Verktygsmaskiner, Lunds Tekniska Högskola, 1998.

5.3 Flexibility

The need of flexibility is company unique, depending on the most uncertain link in the production and the rest of the company. Below follows some of the most common flexibility concepts: [25]

- *Product flexibility.* The product flexibility shows the company's capacity to design, buy and produce, in order to make new products. It also tells how fast the company is able to modify the product and the process to reach a normal production speed.
- *Production flexibility.* The meaning of this concept is the company's ability to produce a wide range of products and cope with changes in the production planning.
- *Capacity flexibility.* Capacity flexibility is the system's ability to change its production volume without affecting its direct costs.
- *Equipment flexibility.* This concept tells how easy it is to add modules and change parts of the equipment, without making too much influence on the total investment.

Flexibility is of great importance when meeting the requirements of today's market. It gives the company a possibility to adapt faster to its customer and market. Flexibility is also a way to reach shorter delivery times and high delivery precision with the result of increased incomes and decreased costs, such as warehousing costs.

[25] Rundqvist Thomas et al, *Kompendium Tillverkningssystem*, Institutionen för Mekanisk Teknologi och Verktygsmaskiner, Lunds Tekniska Högskola, 1998.

6 GTS supplier projects

The following two chapters describe the empirical study made in this thesis. The results are mainly built on interviews with experienced GTS persons and suppliers. This first empirical chapter briefly presents two previous and one ongoing supplier project at GTS with the aim to consider the good ideas they brought and also to get an understanding of the difficulties involved.

6.1 Family suppliers

The family project began around 1996/1997. GTS had a lot of similar products in its assortment but with different designations. The number of suppliers for these parts was also too high. Family classes were set for different products, mainly for the three classes knives, shafts and pins. A smaller amount of special selected family suppliers was supposed be used, which should be able to deliver both large and small quantities. One aim was to consolidate the after sales service with the production of new machines.

The good aspects of the project were many, but the most important outcomes were:

- Supplier reduction
- Better prices and delivery times
- Improved cooperation with suppliers

On the other hand, a lot of difficulties were noticed, such as

- Problems getting hold of the system suppliers' forecasts
- Problems making the system suppliers use the family suppliers
- Too few suppliers were involved in the project

Another problem, experienced by GTS, was that it was often only the after sales parts that were coordinated and consolidated. The suppliers seemed to prioritise the larger volumes that were ordered by the system suppliers. Coordinating small and large volumes for similar products can work really well for some suppliers but can be very unsuitable for others.

The project never officially closed down, but has to some extent been implemented in the organisation instead. Every new item is today family classified, to make it easier moving whole segments to new suppliers. But, the difficulties in grouping the items has in many cases led to one class per supplier, which has resulted in an increased number of classes.

One reason why the project does not really exist today is that no one has been in charge of continuing the structuring work. The new supplier structuring project

(that will be further presented in section 6.3) is, however, in some way a continuation of the old family supplier concept.[26]

6.2 Fast Lane Suppliers

In 1999, managers at Tetra Pak GTS (at this time called Tetra Pak Parts) initiated the task to look into the best way of finding suitable suppliers for urgent deliveries within the company. Initially, the thoughts were to find suppliers that could deliver parts within 24 hours, why the working name became "24-hours-suppliers-project". However, when the true needs were examined, instead the project leader suggested to focus on suppliers with a delivery time within 2-4 weeks, since 24-hours-deliveries did not match the customers' real need. Extremely quick deliveries are very expensive and the extra costs that follow need to give a corresponding value to the customer. Management decided to start a pilot project in order to develop and test different ideas. The concept was renamed to Fast Lane Suppliers – FLS.

The objectives with the FLS concept was to enable a way of structuring purchasing of parts required in small quantities (0's and low forecasted parts) with the aim to receive a number of advantages, such as increasing the service level, facilitating the purchase work, and decreasing stock-keeping and scrapping costs, which should all lead to reduced total costs.

6.2.1 The FLS concept

In earlier stages, the purchasing was focused on Family Suppliers, meaning that the suppliers specialise within a certain segment and, as a result, receives coordination advantages. The FLS concept represented a new way of thinking. The aim was to concentrate on few actors, supplying a large segment. The motive behind this was that more orders per supplier would lead to decreased administration costs. The segments chosen to be most suitable in this project were: Cutting work (turning, milling, etc.), sheet metal, welding and pipes.

Further ideas of the concept were:

- *The supplier should have personnel, particularly responsible for FLS orders*

This production represents mainly simple parts that perhaps take a few hours of the total delivery time of, suppose, six weeks to produce. The special personnel should be able to plan the production in a more suitable way and thus shorten the total delivery time.

- *The supplier should use simple (and often old) machines*

The advantage of using simple machines is the short set-up time, which is essential for low quantity production. Since this often is equivalent with old, off-written machines, operating costs could be reduced.

[26] Interviews with Stefan Boekhoff and Ola Holmqvist, and conversation with Nils-Erik Mårtensson, Jan-Feb 2004.

- *Immediate quotation*

The supplier should not put so much effort in quoting a price to the purchaser. A belief is that persons working with this kind of production, in about 95% of the cases, could estimate a price within a range of plus/minus 20%, without spending hours of calculating. If this assumption is correct, the supplier should be able to return the quotation within an hour. There should also be an adjustment system, to make sure that prices could be rectified afterwards. The opinion was that it was more important to complete an inquiry and a case than to get an exact price.

- *The relationship should be based on a contract with a penalty fee clause.*

If the delivery time was not kept, the supplier could be fined, with the exception of special needed materials, surface treatments, etc, that demands more time. At the same time, a supplier could be rewarded if the service was better than expected.

Why FLS for a supplier?

A lot of suppliers are today in the segment "large series to low costs", while there are none or just a few actors in the segment "produce small series in a good way". The argument from the FLS group was that this was an excellent opportunity for the supplier to promote its business in a new way.

6.2.2 Project close-down

The project led to test-runs with two suppliers during six months. In the latter part of this period, one of the suppliers had reached a service level of about 93%, which was a very good result. In this stage the project group thought that the "perfect" FLS supplier was found. But instead, a high overall price increase by this supplier, and some internal differences of opinion, led to a closedown of the project.

According to some of the persons involved, a couple of important statements to think of, if this kind of project should be able to succeed, are:

- The supplier must be specialised on small orders and preferably see it as a good business opportunity.
- To manage small orders, the manufacturing should be focused on simple and functional machines.
- The supplier must have the right skills, to be able to plan this kind of production in an effective way.

Finally, if management does not believe in a concept it is almost impossible to implement the idea, since the same persons must convince the rest of the company to go through with the project. The asked suppliers wanted to see something concrete before entering the project and it was, according to the persons involved, difficult to make people understand the FLS concept, both internally and externally.[27]

[27] Interview with and material by Åke Pettersson, 2003-12-04.

6.3 Ongoing project 2004: Supplier structuring

During 2004, GTS purchasing has started working on a new supplier structure. The new concept is more or less based on the same ideas as the Family supplier project, but the focus is wider. One aim is to structure GTS Purchasing after product groups, to facilitate the supplier structure process. Today, the strategic purchasers (called Supply Managers) are responsible for a number of suppliers. Many of these are offering and selling a wide range of components to Tetra Pak, which means that many persons purchase similar kind of material. In the future, one person will instead handle, as an example, the product group "springs and dampers" instead of buying the whole range of parts. At the same time, GTS wants to continue reducing the number of suppliers and develop the relationships with those suppliers that actually focus on their core competence.

The project will also concentrate on building platforms for the First-Time-Buy and the Sourcing purchasing groups. Today there is a feeling that everybody places orders as s/he wants and that GTS purchasing has no control of the situation. For instance, one question is how much the System suppliers should be used, since GTS already sources the original component supplier.

The implementation of the new concept should be based on following ideas:

- Restructuring of supplier responsibility.
- Each Supply Manager will be responsible for in average 2,5 product groups. Overlaps and duplications will be made, why every person will be involved in approximately 5 product groups.
- Each product group should have about three preferred suppliers, which should cover different needs, such as close location or special volumes.

Furthermore, the new supplier base should be based on approximately 22 different product groups within the mechanical area. To be able to consolidate the high number of parts on such few suppliers, without losing valuable competence, the purpose is that the main, preferred suppliers should manage the "small suppliers". This demands a larger focus on sub-suppliers, like casting, surface treatment, etc.[28]

[28] Interviews with Stefan Boekhoff and Anders Ekberg, Jan-Feb 2004.

7 Sourcing Purchasing

This chapter presents the results based on statistical studies and interviews, both internal and external. The aim is to investigate opinions about the current Sourcing situation as well as thoughts about future Sourcing approaches.

7.1 Sourcing supplier statistics

GTS supplies parts mainly for packaging machines (Carton) but also for processing systems (Processing). Table 7.1 below shows that 80% of the Carton parts purchased by the Sourcing purchasers are so called *Drawn Parts*. This means that Tetra Pak owns the specification of the part. These parts differ from the *Standard Components*, for which other companies own the specifications. The further supplier studies are based only on the drawn parts purchase.

Table 7.1 ***Sourcing purchase statistics (2002-Nov 2003).***

Type	*% of total Sourcing Purchase*	*% of Carton*
Total*	100,0%	-
Carton	91,8%	100,0%
Drawn Parts	73,3%	**79,9%**

* Processing parts purchased from AL Tumba, AL Thermal, LKM and ABB are not included.

Number of order rows

During the (almost) two-year period 2002- Nov 2003, Sourcing used around 180 different suppliers. 20% of these Sourcing suppliers, which is equal to 36 suppliers, represent more than 80% of the total number of order rows. This relation could also be viewed in Figure 7.1.

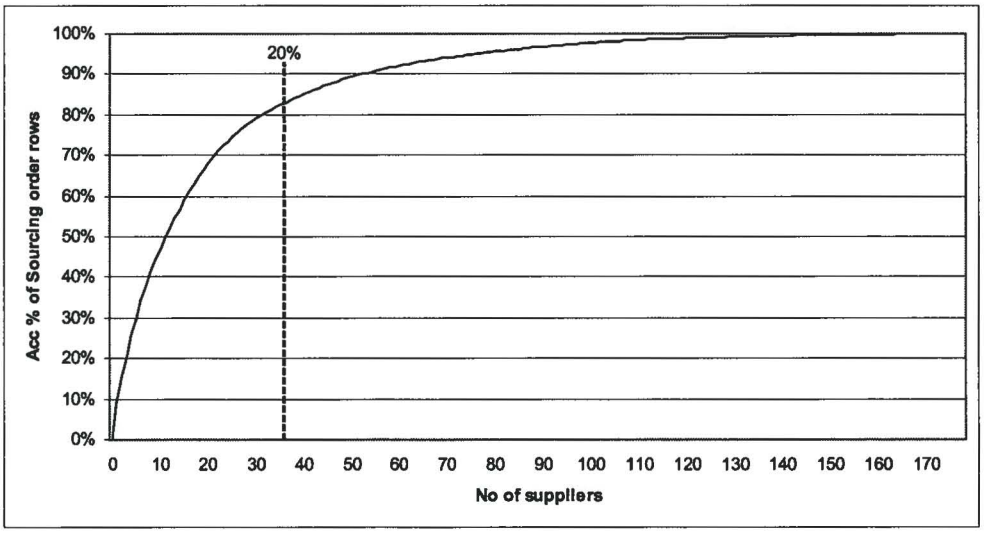

Figure 7.1 ***Accumulated % of Sourcing order rows compared to the number of supplier used.***

Moreover, Table 7.2 presents the ten most commonly used suppliers by the Sourcing suppliers and its share of the total Sourcing order rows.

Table 7.2 ***Suppliers ranked by the no of order rows purchased by Sourcing (Jan 2002-Nov 2003).***

Supplier	*% of total Sourcing order rows*
Supplier 1	8,92%
Supplier 2	6,42%
Supplier 3	5,31%
Supplier 4	4,96%
Supplier 5	4,46%
Supplier 6	4,25%
Supplier 7	3,48%
Supplier 8	3,46%
Supplier 9	3,00%
Supplier 10	2,79%

Purchase amount

20% of the Sourcing suppliers also represent about 80% of the total purchase amount. Table 7.3 shows the suppliers with the ten highest share of Sourcing purchase amount.

Table 7.3 ***Suppliers ranked by the amount purchased by Sourcing (Jan 2002-Nov 2003).***

Supplier	*% of total Sourcing amount*
Supplier 7	13,67%
Supplier 11	4,95%
Supplier 1	4,80%
Supplier 5	4,53%
Supplier 4	3,82%
Supplier 12	3,35%
Supplier 13	3,30%
Supplier 14	3,03%
Supplier 15	2,62%
Supplier 16	2,46%

Description

The descriptions of the most commonly used suppliers are presented in Appendix 5. When examining the suppliers that represent 80% of the total Sourcing order rows, it is found that 38% are system suppliers (see chapter 3.2.2), 44% are family suppliers (see chapter 6.1) and 18% are other suppliers or specialist suppliers.

7.2 Internal interviews

The internal interviews in this thesis are based on three groups; Sourcing purchasers, Managers, and Other experienced GTS persons. It is important to get ideas

from many different viewpoints in order to make an objective analysis. The main issues in the interviews have been to locate problem and improvement areas within Sourcing purchase. Furthermore, the persons have been asked about their ideas of having pre-determined suppliers for Sourcing purchase and which characteristics such a supplier should have.

7.2.1 Problem areas

When making the interviews with persons within the company, a number of problem areas were viewed, which could be interesting to consider in the following discussion. The comments are divided into Sourcing purchasers' and other GTS persons' opinions in Table 7.4 below.

Table 7.4 ***Internal opinions about Sourcing problem areas.***

Sourcing purchasers
• There is no strategy for the Sourcing purchase. GTS purchasing does not know what Sourcing does and vice versa. • There are conflicting interests between Sourcing and GTS purchasing. For instance, suppliers that are very good Sourcing suppliers are shut down since they do not fulfil other obligations. • It's a problem that Sourcing is not allowed to register new suppliers, which are recommended by the constructors. This means more work when Sourcing must find a replacing supplier. • A lot of inquiries are never ordered. This means a lot of unnecessary work, especially with C-lists. • It's difficult finding suppliers that want to deal with the C-lists. • The customer expects shorter and shorter lead-times today, which leads to more work trying to speed up delivery times and tracking the parts.
Other experienced GTS persons
• It is really important that the supplier is aware of the fact that it serves as a Sourcing supplier and that it knows which requirements that are put on these items. The problem when using a family supplier as Sourcing supplier is that the supplier in a long-term view will prioritise the items that are entered into the contract. The question is if it is possible to put the Sourcing purchase under some sort of contract as well, to avoid this situation. • For the customer, the main problem is the long lead-times. The risk is then that many of them will buy the material from somewhere else. • The volume involved is too small to interest the suppliers. The solution of this would be to use the FLS concept (see chapter 6.2) and consolidate the Sourcing orders to just a few suppliers in order to reach profitable volumes.

7.2.2 Pre-determination of suppliers

Management believes that the process of choosing and finding a supplier for the Sourcing inquiries is too time-consuming. To improve the process, one suggestion is to have pre-determined suppliers for different parts, primarily for the most purchased product groups. This means that if the purchaser gets an inquiry for an aluminium axle, s/he knows exactly which supplier to ask. Furthermore, the supplier should be aware of that it works as a Sourcing supplier and must have

certain restrictions about how to handle and prioritise these orders. Table 7.5 presents comments about pre-determination collected from the internal interviews.

Table 7.5 ***Internal opinions of Sourcing supplier pre-determination***

Sourcing purchasers
• This is similar of how we work today, mostly with system suppliers.
• We usually do not spend very much time searching for suppliers. We know in most cases whom to ask, from experience.
• I do not think we should be tied to too few suppliers. This causes problems when this supplier no longer is able to deliver.
• It's important not to choose suppliers with too advanced equipment, since the production will be too expensive.
• A lot of parts can be bought from the system supplier.
• There is a big risk that the Sourcing orders will be low prioritised if a too big supplier is chosen. Today we can see that suppliers prioritise the product companies, which purchase larger quantities, before GTS' orders.
• It's a good idea of having special Sourcing suppliers, especially for old parts. But effort should also be made to improve the cooperation with system suppliers.
• A problem with reducing the amount of suppliers is if the remaining suppliers get too busy; how will they be able to provide Sourcing with fast service?
• It's not a good idea, from a service point of view, to force large suppliers to take care of Sourcing items if they do not fully agree.
• It's not possible... It would have facilitated the Sourcing purchase process to have pre-determined suppliers, but I do not believe in it. Our suppliers are not interested of producing only one piece.
Management
• GTS purchasing should provide the Sourcing purchasers with a supplier base. To choose suppliers is a strategic decision, which should not be made by the Sourcing purchaser without restrictions.
• Even if the supplier is more interested in large orders, he might have to undertake some less profitable orders to get the big business.
• We should go for the big/medium sized relations.
• One aim is to make the process easier for persons outside the Sourcing group to manage.
Other experienced GTS persons
• There should be some sort of contract so that the supplier can guarantee capacity for Sourcing items.
• Pre-determined suppliers will lead to less administration and, in a long-term view, less needed purchasing resources.
• The volumes should be spread on the chosen suppliers in such a way that it becomes profitable for the supplier producing small series. If one operator should spend all his time producing Sourcing parts and stay cost effective, he needs an order value of approximately 7-800 000 SEK/year. Furthermore, a back up should be selected if problem arises.

7.2.3 Sourcing supplier characteristics

Which are the most important criteria for a supplier that should work as a Sourcing supplier? Table 7.6 summarises opinions about this task, collected from interviews with a number of experienced persons within GTS.

Table 7.6 ***Internal opinions about Sourcing supplier characteristics.***

Sourcing purchasers
• Quick respond time on inquiries • Flexible machine park • Low overhead costs • Short lead times • High delivery precision
Management
• OK price • Close location (within 100 km) • Suppliers with no production of their own are not very suitable • Competitive • Must have an organization that is able to serve GTS 365 days a year • Large/medium sized relations with GTS • The most important thing isn't that the supplier has the right machine park. If we choose a supplier, it is up to him either to produce himself or to outsource the job.
Other experienced GTS persons
• Technical skills • Middle sized workshops with personal service • Good cooperation with sub suppliers • Awareness of how to prioritise Sourcing orders and inquiries • The supplier must have a system to secure the quality of the Sourcing items. GTS should not have to control these, often urgent, parts. • Prototype workshop • 'Third part logistics' should be used, to secure the supply and make the flow more even. • The basic strategy should be to use large suppliers (high Tetra Pak dependency).

With the aim to examine if any criterion is more important than another, the same persons were asked to rank the criteria. The most important quality is equal to 1, the second most important quality is equal to 2, etc. They were also allowed to put the same ranking on more than one criterion. 13 persons answered the questionnaire and the result, in terms of how many 1:s, 2:s, 3:s, and higher, is presented in

Table 7.7. The result should, however, be viewed slightly critical, since some of the persons ranked the qualities with 1:s and 2:s only, while others ranked the qualities from 1 to 10. This is the reason why one of the ranking categories is presented as more than or equal to 3.

Table 7.7 ***Ranking of the Sourcing supplier characteristics***

	Criteria	1	2	≥3	No answer	Average ranking
1	The supplier must have a system to secure the quality of the Sourcing items. GTS should not have to control these, often urgent, parts.	10	1	1	1	1,25
2	High delivery precision	9	3	1	0	1,39
3	Short lead times	9	1	3	0	1,54
4	Quick respond time on inquiries	7	3	3	0	1,70
5	Technical skills	6	2	4	1	1,83
5	Personal service	7	0	5	1	1,83
5	Aware of how to prioritise Sourcing orders and inquiries	7	0	5	1	1,83
6	Good cooperation with sub suppliers	5	2	5	1	2,00
7	Flexible machine park	3	5	4	1	2,08
7	Competitive	3	5	4	1	2,08
8	Open the whole year	4	3	6	0	2,15
9	Low price	3	4	5	1	2,17
10	Third part logistics, to secure the supply and make the flow more even.	1	5	6	1	2,42
11	Have large sized relations with GTS (High Tetra Pak dependency)	0	6	5	2	2,46
12	Close location	0	6	6	1	2,50
12	Prototype workshop	1	4	7	1	2,50
13	Contracting	0	2	8	3	2,80

7.2.4 Improvement areas

Besides having pre-determined suppliers, a number of suggestions on how to improve the Sourcing purchase process came up during the internal interviews. For example, to get a better idea of which suppliers to choose, the Sourcing purchasers should develop their knowledge by:

- Making more supplier visits, to get a better view of what everyone can manufacture.
- Getting better knowledge about what the system suppliers are doing.
- Getting more technical education.
- Learning about the suppliers' networks in order to reach knowledge about what they can produce.

Furthermore, to avoid the time-consuming work identifying parts and drawings, difficult cases should to a greater extent than today be handed over to the product owner. The Sourcing purchasers are also experiencing that a lot of inquiries never turn into a customer order. To avoid this, a customer must always put an order before the Sourcing purchaser starts looking for a supplier. The question is,

however, if this discussion is realistic and if it interacts with the GTS service policy.

7.2.5 Price vs. delivery time

The opinions regarding the importance of having a low price for Sourcing items differ among the respondents. Table 7.8 presents some of the internal comments on whether price or delivery time is most important for the customer.

Table 7.8 ***Internal opinions about price vs. delivery time.***

Sourcing purchasers
Price is most important for the customer. We have always believed that delivery time is the most important factor, but it is not. Delivery time is more important for forecasted, frequently bought parts and not for Sourcing items.
Management
Price is not the most important issue, since Sourcing items represent such a small part of the total purchase amount. If a customer order already exists, there is no need of putting too much effort finding the lowest price. The most important thing is to concentrate on the customer's required delivery time, which means high delivery precision.
Other experienced GTS persons
Price is important, but not decisive. Why is the customer ordering the part? In a break down situation, delivery time is of course essential. This kind of purchase is, however, not very usual for Sourcing purchase. Generally, delivery precision is the most important issue for the customer.

7.3 Supplier interviews

A number of suppliers were interviewed with the aim to get an idea of what the suppliers think of Sourcing purchase and low series manufacturing in general, and what characteristic they believe is necessary to succeed as an Sourcing supplier. The selection of respondents was made among suppliers that are frequently used by the Sourcing group today.

7.3.1 Suppliers' attitude towards low series manufacturing

Many suppliers say that they cannot and will not produce too small series. However, the suppliers interviewed in this thesis are by the Sourcing group frequently used suppliers, and have therefore shown that they are able to give Tetra Pak this service. When asking them what they really think of producing small series, the opinions were alike. The comments are presented in Table 7.9.

Table 7.9 ***Suppliers' opinions about Sourcing orders/low series manufacturing***

Suppliers
• Of course, we are making more money on continuity and large series, but the world is much more unstable today.
• Let's say that our company, for instance, earn good money on 65% of our products, 20% makes a small profit, 10% is just an exchange of money and 5% is a loss. The point is that we will never reach the 65% of profitable items if we do not offer the customer the 5% of "less wanted parts".
• There is no such thing like "we do not want to produce this part". If we turn down an inquiry, it is because of limitations in process skills or in material supply.
• Often we can produce everything, with the help of our sub suppliers. However, there is a problem when different circumstances make the part remarkably high-priced. We, as supplier, will then appear as a very expensive company compared to our competitors, which is not very good for the image. In such cases, it might be better to suggest GTS to use another more suitable supplier.
• It's important trying to help GTS finding a supplier, even if our company cannot produce. It must be in our interest that GTS gets the part. It is also important that the production is kept locally and not being outsourced to Germany or Asia, even if it means that our competitor will get the order.
• A 20% increase of Sourcing orders would not be a problem. But, we cannot think that more orders than that would be a problem either. We simply have to adapt our organisation and be pleased with the orders we get.
• One thing that could make the process easier for the supplier is to make sure that the version of the drawing is correct. Today, a lot of time is consumed of identifying which one of the versions that is correct; the one mentioned on the order, the one faxed with the order, or the one that already exists in the supplier's system.

7.3.2 Sourcing supplier characteristics

According to the suppliers interviewed in this thesis, to succeed within the low quantity segment, which includes Sourcing purchasing, the supplier should:

- Have a discipline within the organisation that provides a short respond time to customers.
- Have a flexible organisation and skilled personnel.
- Have a system where the operator easily knows how to prioritise different orders.
- The machines should have permanently placed tools with short set-up times.

To be competitive within *both* low and high quantity manufacturing, a supplier must have a machine park with high flexibility. It can be worthwhile producing only one piece in a NC machine, especially if the item needs a lot of different operations. A washer with a hole is, however, too simple to produce in a NC machine, why conventional machines are needed as well. For the high series production, the supplier should have machines that can run without too much supervision. It should need nothing but change of material and some control and measurement in certain time intervals. Meanwhile, the operator is able to make small series in another machine, specialised for this kind of manufacturing. To be cost effective, cheaper and more simple machines should be used. The operator can be responsible for 2-3 machines and his work becomes more effective and also more interesting.

7.3.3 Improvement areas

What can GTS do to make the low quantity manufacturing more efficient for the supplier, which results in lower prices? The suppliers' opinion is that there is a simple theory saying that the total time for producing the item should be as short as possible. If GTS grouped its parts so that similar products were bought from the same supplier, a lot of efforts could be made:

- *Purchasing:* Price is always related to the quantity. If the same kind of material is located at one supplier, prices can be reduced. Furthermore, a lesser number of purchase occasions results in lower administrative re-ordering costs.
- *Production:* A lot of different items in the same machine lead to long set-up times. However, if for instance pins in about the same dimensions are ordered, the same tools can be used and time is saved.

One of the asked suppliers says that the most appropriate supplier strategy depends on which focus the customer has. If the focus is short delivery times, suppliers with flexible organisations, who can meet these requirements, should be chosen. On the other hand, if price is the most important issue, suppliers with the family group alignment should be chosen. These suppliers have most likely the shortest set-up times and costs, and can therefore better compete with price.

8 Analysis

This chapter presents the analysis, based on the previous theoretical and empirical chapters. The analysis discusses how the collected factors are influencing each other, and which possible solutions that exist for the thesis' two main questions. All elements in the analysis are carefully described, to make it possible for the reader to review the facts and draw his/her own conclusions.

The **first task** is to identify possibilities to utilize and align the supplier strategy pursued by GTS Purchasing with the concepts of Sourcing purchasing in order to enable the objectives.

Questions to answer

- How does GTS' present purchasing and supplier strategy work?
- How is the Sourcing purchase concept defined?
- How does this concept align with the overall strategy?
- What can be done to improve the present situation?

8.1 Sourcing purchasing in the overall strategy

Sourcing purchase employs five persons, or nearly 25% of GTS' total operative purchase staff. On the other hand, these purchases represent only 2% of the total purchase amount at GTS. This fact makes these parts rather uninteresting for both GTS and its suppliers in terms of cost and lead-time reductions. It is much more profitable to put effort into the high volume segment where a small cost reduction leads to clear results. Still, GTS has a responsibility serving the entire after sales market within Tetra Pak and the customers will not accept a mediocre service in any segment.

The **first task** in this thesis was to investigate how Sourcing purchase can become a part of the GTS supplier and purchase strategy. So far, Sourcing purchase has been low prioritised and not really involved in the overall purchasing strategy. However, management has lately begun to consider the Sourcing purchase as an area worth focusing more serious on. The first step was to map the Sourcing process, in order to find internal improvement areas. The next step will, with the support of this thesis, be to look over the Sourcing supplier structure.

Sourcing purchase constitutes a very small part of the total GTS organisation. When GTS purchasing are prioritising, there are always projects with larger profits coming first. Therefore, the idealistic situation would be to find a way to implement Sourcing purchase into the general strategic work, without putting too much additional effort. This section presents examples of how Sourcing purchasing is affected by, and how it can be a part of, different GTS purchasing strategies.

8.1.1 Supplier reduction

Today, GTS' purchasing strategy is very focused on supplier reduction. The aim is halving the supplier base in a period of 4-5 years and if this would be possible, it is

important to involve the Sourcing group in the strategy. GTS purchasing experiences a problem with Sourcing purchasers wanting to register new or already closed down suppliers, at the same time as they work hard, reducing the number of suppliers. To avoid these situations to occur, it is important that GTS purchase informs Sourcing about the consequences that follow with a new registration. There must be at least one supplier among the existing 900 that is able to produce the part.

Moreover, it is important for GTS purchasing not only to focus on reducing suppliers, but also making the reductions within the right product groups and segments. There might be areas that even need to increase their supplier base, in order to enhance competition or to minimize risks.

8.1.2 Contract

Another focused area is to put as many parts as possible under contract. This procedure decreases the risks for GTS in terms of unexpected price raises and non-kept delivery times. Though, these contracts do not involve Sourcing, since it is almost impossible for the supplier to sign a contract for items no one knows anything about.

In a long-term view, this strategy can become a risk for the Sourcing purchases. When more and more items are put under contract, these items will be prioritised while the non-contracted items (Sourcing items included) may have to play second fiddle, since GTS has the right to demand penalty fees if the contract is not followed. Though, quitting the contracting procedure will definitely not solving any problems. It is important that GTS continues putting effort in the areas where money could be saved, and this should not be stopped by the few percent that Sourcing represents. What could be a further step is, however, to consider if the Sourcing items in some way could be put under some sort of contract as well.

8.1.3 Supplier structuring

The purpose of the supplier-structuring project is, as a part of the supplier reduction process, to have one or just a few suppliers for each segment. These suppliers should cover all the needs within GTS. This is a good opportunity to include, in a natural way, Sourcing purchase in the overall strategy. GTS purchasing must make sure that every segment has one supplier that is able to cope with the Sourcing demands, such as producing low volumes, having fairly short delivery times, and fast respond times. This issue will be more discussed further on in the analysis.

To be able to go through with this structuring work, it is, however, important for GTS to be a part of the developing process of new machines to control the first choice of supplier. This kind of standardization will also, in a long-term view, lead to a decreased need of Sourcing purchasers.

8.1.4 Supplier Portal

Today, there exist a number of supporting systems within Tetra Pak where information about parts and suppliers can be found. The problem is that the lack of

updating routines makes the systems useless. People lose faith in the systems and finally stop using them.

The supplier portal is one of the systems with a lot of possibilities to provide a more efficient process for all purchase functions, including Sourcing. If this tool worked properly, the Sourcing work would become easier, especially for less experienced persons. The user would be able to type search terms, such as material, manufacturing method, and volume (high/medium/low). The system would then give suggestions on usable suppliers and also rank them. When looking closer at the supplier, one should be able to read if there are certain limitations that perhaps make the choice less suitable in a specific case.

GTS purchasing should continue being responsible for updating the portal. However, if this should work well, there must be more straight guidelines in order to make sure that one can trust the result of a search. All information needed may not exist today, but I think it should not be too time-consuming for GTS purchasing collecting the required data.

8.1.5 Assessment

Today, neither the supplier assessment system nor the pre-requirements questionnaire contains any specific criteria concerning Sourcing purchase or low volume manufacturing. The only thing mentioned, related to Sourcing's needs, is a demand of flexibility. If it is topical to use some of the key suppliers as Sourcing suppliers, it should be considered adding some criteria to the assessment checklist. An example of this could be how well the organisation manages a high number of inquiries. The pre-requirements questionnaire is much less detailed, and therefore, it can be more difficult to add specific Sourcing criteria here.

The **second task** of the project is to identify if there exists indicators that promote suppliers' suitability of serving as "Sourcing suppliers" to GTS. If so, which are they and is it possible to rank them? Are the currently used suppliers for Sourcing purchasing the most suitable and/or are there other suppliers that could be utilized more?

Questions to answer

- What characterises a Sourcing purchase and what demands does that put on a supplier?
- Examine the opinions of having pre-determined suppliers for Sourcing.
- Which are the most important qualities for a Sourcing supplier according to Literature, Sourcing purchasers, Managers, Other experienced GTS persons, and Suppliers?
- Is it possible to rank these qualities? How will this ranking look like?
- Which are the most frequent used suppliers by the Sourcing purchasers today? Do these suppliers fulfil above demands?

8.2 Strategic aspects from literature studies

The literature does not mention very much about strategies for purchase of seldom bought, low volume items. However, some sourcing and manufacturing strategies can to some extent be applied to this thesis' **second task**.

8.2.1 Kraljic's matrix

Theories, including Kraljic's ideas, often mention the fact that the 80-20 rule should be the first thing to use when restructuring and making an organisation more effective. There is no use putting effort into the last few percent since these do not make any change to the total result anyway. The problem is that it is about these last, in many cases uninteresting, percent this thesis deals with.

The Sourcing purchases represent less than 2 % of GTS' total purchase amount and have, consequently, no major impact on the financial result. The reason why GTS supplies these items at all is that it is a service company and, therefore, has an obligation serving its customers with all sorts of Tetra machine parts. Lowering the costs for these parts could perhaps not make profits. However, by making the process more effective, customer satisfaction would increase and savings in terms of time and administration costs could be achieved.

Adapting the Kraljic's portfolio technique on Sourcing purchase, the strategy of *Bottleneck products* would be the most appropriate to use. The financial impact is low, but the supply risk is rather high. No contracts are written and the supplier can therefore be seen as the dominant part.

The suggested strategy, if applying Kraljic's theory about bottleneck products for Sourcing items, should be to secure the supply. To use buffer stocks is not topical in this case, since the part might never be ordered again. The most suitable strategy for Sourcing items should instead be to improve the position against the supplier. If choosing suppliers that already have a high Tetra Pak dependency, it is more likely that the supplier will deliver "less wanted" parts as well, to secure the other, more profitable, business.

8.2.2 Sourcing strategies in theory

Identifying the position of Sourcing items in the matrix of chapter 4.3, the comparison primarily has to be made with the user-specific parts. This strategy recommends safety stocks. As discussed earlier, this is however not suitable for Sourcing purchase due to its unpredictable demand. Furthermore, the strategy proposes partnership with local suppliers to increase the position at the supplier and thus get priorities.

The same pattern can be found in the sourcing strategies suggested by van Weele in chapter 4.4. Single sourcing, i.e. when only one supplier is used for each product or product group, will most likely fulfil the Sourcing demands. This kind of closer cooperation improves the possibility of getting short lead times, even though the supply risk is increasing. Furthermore, using local suppliers could facilitate the Sourcing purchase in terms of good communication, flexibility and fast deliveries.

8.2.3 Price

Sourcing items are rather expensive compared to high volume items. This is, however, not very strange at all. Factors, discussed in chapter 3.3 and 4.5, that affect the high price on Sourcing items are mostly based on the low volume involved:

- The set-up cost is only split on one or a few parts.
- Suppliers can benefit from the fact that the customer order based items are critical to GTS.
- Since the supplier has never produced the item before, he cannot be sure of how much it will cost. It is therefore possible that he sets a higher price to secure not making any losses.
- Discounts are often given to benefit high quantity orders and not topical in this case.
- The supplier may, in his turn, have to buy material especially for this part, which gives low-volume disadvantages.

The only factor, of the ones mentioned in section 4.5, promoting a lower price for Sourcing items is if suppliers lower the price, just to get access to GTS as a well-reputed customer. It is, however, likely that GTS will get the best price anyway by using existing suppliers of which GTS already serves as a big customer.

8.2.4 Manufacturing strategies

GTS does not differ from other companies when it comes to development pattern. Global trends as customer orientation, an increased number of direct customer orders and, as a result of less buffering, a demand for shorter delivery times, are to a great extent affecting the company's strategies.

Sourcing items are characterised by its wide range of different products, small customer order sizes and a need for fast deliveries. Table 5.1 shows suitable manufacturing strategies for different business implications, and it is not difficult to see that manufacturing of Sourcing items rather points in the left direction, towards jobbing, than in the direction of line manufacturing. In order to keep prices on an

acceptable level, a suitable Sourcing supplier must be flexible in terms of all earlier mentioned flexibility concept. Moreover, a high flexibility means that the supplier is able to make fast set-ups, which promotes the requirement for shorter lead times.

8.3 Sourcing suppliers

The theoretical studies points in the direction of using flexible, perhaps local suppliers as Sourcing suppliers but also to strengthen the company's (GTS') position against the supplier to fulfil the desired needs. This section analyses the results of the interviews made with a number of experienced persons within and outside GTS, with the aim to go on finding a solution to this thesis' second task.

8.3.1 Pre-determination of suppliers

The opinions about having pre-determined Sourcing suppliers at GTS have been varying. The Sourcing persons, working with this kind of purchasing every day, seem to be a bit uncertain about the idea and doubt that any supplier is interested in getting an increased amount of Sourcing orders. There is also a belief that the suppliers used today (mostly family and system suppliers) are the best suited.

Money saving is the key issue for most management persons and the purchasing management at GTS is convinced that pre-determined suppliers is one strategy that would make the Sourcing process more efficient. In this case, making the process less time-consuming and thus decreasing the purchasing resources needed, would save the company money.

Table 8.1 presents a summary, divided into pros and cons that have come up in the interviews, of having pre-determined suppliers.

Table 8.1 ***Pros and cons of having pre-determined suppliers***

+	-
• The purchase process becomes easier, if just having one supplier to concentrate on. • The process will be easier for persons outside the experienced Sourcing group to handle. • Less needed administration will lead to less needed purchasing resources (and thus reduced costs) in a long-term view. • The interviewed suppliers do not seem too critical of Sourcing orders.	• A selection of too few suppliers means a supply risk if someone fails to deliver, or if GTS purchasing closes the supplier. • It's not necessary, since the Sourcing purchasers say that they already know which suppliers to use. • There is a risk that a supplier cannot deal with an increased amount of Sourcing orders, which demands more administration efforts. • It will be difficult to find suppliers willing to work as pre-determined Sourcing suppliers, since the profit is too small. • The supplier might increase the prices on Sourcing items if it experiences increasing administration.

The disadvantages of having pre-determined suppliers are mostly based on concerns that the suppliers do not want, and cannot handle, an increased amount of

Sourcing orders. The results of the supplier interviews, however, pointed in the opposite direction. None of the asked suppliers indicated that Sourcing orders are unwanted. Instead, they all claimed that every received order is welcomed, even if volumes are low. Furthermore, the suppliers declared that their main interest is to satisfy the customer – in this case GTS – and they will therefore adjust the organisation if necessary. The discussion about the suppliers' reliability and objectivity (see section 2.2) must, however, be taken into consideration.

Another argument in favour of pre-determined suppliers, in the discussion if suppliers can cope with an increased number of Sourcing orders, is the following: The new supplier-structuring project will involve approximately 22 different product groups. If every group has one supplier that is able to handle small volumes, including Sourcing orders, the Sourcing purchasers will have at least 22 different suppliers to use. Figure 7.1 shows the relation between the number of order rows purchased and the amount of suppliers used. Today, 22 suppliers represent approximately 70 % of the total number of order rows. This means; if many of today's most used Sourcing suppliers will remain as pre-determined Sourcing suppliers in the new supplier structure, the total number of Sourcing orders for each supplier will, in average, be increased by as little as 1,5 %.

8.3.2 Sourcing supplier characteristics

If generalising the results of the survey regarding Sourcing supplier characteristics, it could be said that:

- The Sourcing purchasers are focused on making the every day routines work and fulfilling the customer needs. This makes the requirements on fast responding times and fast delivery times important. The purchasers are also, unlike the other respondents, experiencing that the price is of big importance to the customer.
- Management is, of course, also interested in what is best for the customer, but looks perhaps a bit further into the issue, and thinks that making use of the supplier's dependency position against GTS could improve the Sourcing purchase process.
- The suppliers are convinced that, in order to be successful within the low quantity segment and to be able to fulfil GTS' requirements, a proper machine set-up and highly skilled personnel is essential.

The ranking of the qualities in Table 7.7 was meant to give some kind of general view of the most important Sourcing supplier characteristics. The opinions of what should be prioritised differ, but what could be perceived straight away is that high quality is a basic condition that could never be neglected. At the same time, none of the respondents thought that high Tetra Pak dependency, close location, or contracting of the Sourcing suppliers should be highly prioritised qualities. Moreover, criteria like high delivery precision, short lead times and quick responding times on inquiries seem to be more important than a low price.

All mentioned criteria in Table 7.6 are, however, important in one way or another and many of the factors can be seen as a result of other demands. For instance, technical skills are basic criteria if the quality requirements should be fulfilled. Furthermore, a competitive supplier with a suitable machine park will hopefully lead to low prices, while a good cooperation with sub suppliers and an awareness of how to prioritise the Sourcing orders are essential if delivery times should be kept short.

Therefore, as a consequence of this discussion, the summary of the most important Sourcing supplier qualities will be divided into four main criteria with additional sub criteria (see Table 8.2).

Table 8.2 ***Summary of the most important Sourcing supplier criteria***

Main criteria	Sub criteria
High quality	• Well developed quality assurance system • Technical skills
High delivery precision	• Good cooperation with sub suppliers • Flexible organisation/machine park • Open all year around • (Contracting)
Short lead times/Quick respond times on inquiries	• Personal service • Aware of how to prioritise Sourcing orders and inquiries • Good cooperation with sub suppliers • (High Tetra Pak dependency)
Low price	• Flexible machine park • Competitive • High Tetra Pak dependency • (Close location)

8.3.3 GTS projects

The FLS project, presented in section 6.2, is the only GTS project that has been specifically focused on Sourcing and low volume purchase. In theory, the concept seems perfect; it is based on partnership with personal service, the production is consolidated, responding times are short, flexible machines are used, etc. Still, the concept does not seem to interest management at GTS. Perhaps are persons finding it too unrealistic, that a supplier would devote special workers and machines, without increasing price, just to fulfil the low volume needs of GTS? Other persons claim that if GTS could just promise the supplier certain volumes, the FLS concept should be worth carrying on with.

Anyway, the time on the FLS project may not have been spent unnecessarily if there are any fragments that can be used in the future. For instance, the idea of "immediate quotations" would, if it in some way was possible to implement, really shorten the responding times, and thus enhance customer satisfaction.

8.3.4 Machine layout vs. high Tetra Pak dependency

When discussing the characteristics of a good Sourcing supplier, an interesting question is whether it is more important that the supplier has an appropriate machine set-up, or if it is more important that the level of Tetra Pak dependency is high. There are no precise answers, but the question can be considered from different views.

The theories, studied in this thesis, point in the direction that the best way of securing the supply of critical parts is to strengthen the supplier's dependency and take advantage of the position as an important customer. The suppliers will then be disposed to stand by and manage the Sourcing purchases, even if it does not result in any profits.

In a long-term view, the consequence will probably be that someone must pay when suppliers are producing parts that they are not really meant for. In the end, this someone will most likely be GTS, when the supplier must increase the price on other parts to compensate for the Sourcing losses. Finding suppliers that are able to produce low-volume items with OK prices could therefore result in a better negotiation position with the suppliers that handle the more important parts. In other words, there is a difference between if the supplier can manage the demands of Sourcing purchase and if it is efficient for GTS in a long-term view.[29]

8.3.5 The Sourcing suppliers of today

Today, the most commonly used Sourcing suppliers are, as shown in Appendix 5, mainly System suppliers and the former called Family suppliers. What characterises these suppliers is difficult to say, except that they are suppliers with a long Tetra Pak knowledge and experience, and that personal contacts already exist. The frequent use of system suppliers is perhaps a result of its availability. The Sourcing purchaser must only identify which system the needed part comes from, before s/he knows which supplier to ask.

The Sourcing purchasers have lists of the former Family suppliers where information is gathered about what specialties each supplier has in terms of for instance material and manufacturing resources. These lists are not updated, but a lot of the information is still usable when a Sourcing supplier should be found.

What is missing in the Sourcing supplier structure today is perhaps not suitable suppliers, but instead an understanding of *why* certain suppliers are used. A new documentation should therefore be made by the Sourcing group, together with GTS purchasing, telling which suppliers to use in specific cases. Furthermore, these

---

[29] E-mail conversation with Håkan Nordahl, Lecturer at the Dept of Production Management at LTH, Nov 2003.

suppliers should be aware of which service they are expected to give for Sourcing items, in terms of responding time on inquiries, delivery time and perhaps price.

9 Conclusions/Recommendations

This chapter summarises the most important statements and conclusions from the chapter of analysis. Furthermore, the author presents her own suggestions and recommendations to the company. Finally, a discussion about the results and its generalisation possibilities are made.

9.1 Sourcing purchase in the overall strategy

The **first task** of this thesis dealt with the question of how to include Sourcing purchasing in the overall purchasing strategy at GTS. Since the company does not expect to make any large earnings, time-consuming activities should be avoided when improving the Sourcing process. Instead, GTS should focus on bringing in Sourcing purchase as a natural part of the general strategy.

Different GTS purchasing strategies that Sourcing purchasing can be affected by and also be a part of is discussed in this thesis. The most important conclusions are the following:

- **Supplier reduction** – GTS purchasing must inform Sourcing of the importance that all purchasing functions within the company are striving for the same goals. They must also be supportive finding alternative suppliers when rejecting Sourcing to use a specific supplier.
- **Supplier structuring** – Including the Sourcing needs in the ongoing supplier-structuring project will naturally involve Sourcing in the overall strategy. To find suitable suppliers in order to make the operative work run, it is however important that the Sourcing group has some kind of role in the selection process.
- **Supplier portal** – A great possibility of a supporting system for Sourcing as well as for other purchasing functions within GTS exist in the Supplier portal. By updating the system with information (manufacturing and material skills, suitable volumes, etc.) about all suppliers, the Sourcing work could become more standardised than today. The Supply Managers should be responsible for updating the system.
- **Assessment** – If it is topical to use key suppliers, which are the only suppliers evaluated by the assessment system today, as Sourcing suppliers, the Assessment system should involve some kind of criteria related to the Sourcing needs. This could for instance be how well the organisation would manage a high number of inquiries.

9.2 Sourcing suppliers

The **second task** in the thesis dealt with the question of if there are certain criteria that make a supplier a suitable Sourcing supplier. It was also discussed if it is appropriate to have pre-determined suppliers for Sourcing purchase. The result was

mainly based on interviews with experienced persons within GTS, but also on supplier interviews and literature studies.

9.2.1 Sourcing supplier characteristics

Sourcing purchase is characterised by low volumes, unpredictable demand, and a need for fast deliveries (since there is always a customer order behind the purchase order). According to literature, the GTS strategy for this kind of parts should be following:

- Improving the negotiation position against the supplier, to secure the supply. This could be done by partnership or by using suppliers that already have a high Tetra Pak dependency.
- Using single sourcing and local sourcing could facilitate a good communication and fast deliveries.
- To be able to produce small volumes to an acceptable price and in the same time have an administration that can cope with the high number of inquiries, a supplier suitable for Sourcing purchase should be flexible, in terms of both production process and organisation.

Moreover, the interviews resulted in a list of the most important Sourcing supplier criteria according to persons within GTS. Different groups at GTS found different criteria most important, why it is difficult to make a ranking. It could, however, look like this:

1. **High quality** – Should be secured by suppliers' quality assurance system and high technical skills.
2. **High delivery precision** – The suppliers' organisation with suitable machines and good cooperation with sub-suppliers should make this need possible. It is also important that the supplier is available to GTS all year around.
3. **Short lead times/Quick respond times on inquiries** – This criterion will best be satisfied if the supplier is aware of how to prioritise Sourcing orders and inquiries. To be able to answer on inquiries fast enough, it is also important that the supplier, in its turn, gets a fast answer from his supplier. Therefore, a well-functioning sub-supplier network is essential.
4. **Low price** – This seems to be the least important criterion for Sourcing purchase according to the respondents. However, the price must not be unreasonably high, why it is important that the supplier has a flexible machine park and, also, that it is competitive.

Personal reflections about Sourcing supplier characteristics

Personally, I think it is really hard to say which the most important issue for Sourcing purchase is. There are always exceptions, but if I must pick the most important criteria, I would choose fast delivery times (2-3 weeks) and quick responding times on inquiries (1-2 days). High quality is seen as a matter of course. The selection is based on what I think will give the customer the highest sense of

improved service level. However, an important sub criterion is 'good cooperation with sub-suppliers'. To be able to cope with the main requirements that I chose, it is essential that the supplier, in its turn, can get the same quick service from its supplier.

9.2.2 Pre-determination of suppliers

The opinions of having pre-determined suppliers for Sourcing have been varying. The arguments in favour of the concept are based on making the process more efficient, in order to decrease administration costs and purchasing resources. The opposite arguments have been based on beliefs that suppliers cannot and will not handle an increased amount of Sourcing orders and inquiries. This fact has, however, to some extent been proved wrong in the small supplier survey made in this thesis.

Personal reflections about pre-determined suppliers

Earlier experiences show that a majority of all projects never work out as planned, as a result of management changes or other factors. A question of *when* and even *if* Sourcing should be totally included in the new structure must therefore be asked.

Having pre-determined suppliers for the Sourcing group seem like a good idea that connects with the rest of the purchasing strategies in the company. GTS purchasing in collaboration with the Sourcing purchasers should preferably make the selection process. The project could either be carried out as a "light" version, meaning that about the same suppliers as today are used, only with a larger focus on informing the suppliers about the needs and demands of Sourcing items. Since there are plans of involving Sourcing in the overall supplier-structuring project, this could be seen as a good short-term solution.

On the other hand, the project could wait and be carried out together with the structuring project. At least one of the three "preferred suppliers" in each product group should fulfil the needs of a pre-determined Sourcing supplier. The selection should be based on all criteria mentioned in this thesis as well as the demands that GTS purchasing has on a "preferred supplier", and not only on the fact that the supplier is frequently used today. If this vision works in reality, it would be optimal.

However, the need of sub-suppliers will probably be even more important in this case, when such a small amount of suppliers should be used. There is always a risk, though, that the problem finding suppliers will just move one step back in the chain, and that important factors like responding times and delivery times will not be improved at all. Yes, GTS will need less Sourcing purchasing resources, but one often forgets that the solution should benefit the entire supply chain. The problem should not just be moved to the supplier, since this in a long-term view probably will strike back on Tetra Pak by higher overall prices.

An additional question to discuss is how to introduce the idea to the supplier. Should it be told that it is a pre-determined supplier, or is this unnecessary? Is it

better for GTS to hold on to the position as a dominant part than to make sure that the supplier understands the importance of these orders? This is not an easy question to answer, but I really think that the supplier will make a better work if GTS is straight with its intentions. If the whole idea with pre-determined suppliers would work and be efficient, I think it is important that the partnership is mutual. If the supplier does not understand the meaning of the concept and why it is so important with, for instance, fast responding and delivery times, I cannot see much of a difference compared to today's situation.

9.3 Final comments

As a final point in this thesis, it is interesting to discuss if the objectives are fulfilled and if the method used is the most suitable one. Moreover, the question whether the results could be used in other situations and for other companies is put, as well as ideas of further studies in the area.

9.3.1 Objectives vs. results

The main objective of this project was to identify aspects that enables further improvement of the Sourcing purchase process, that is, reducing time from customer inquiry to time of delivery and reducing purchase price. The results have not been focusing directly on what to accomplish to reduce delivery times and price. Instead, the thesis has concentrated on the two tasks, which hopefully some day will fulfil the objectives. Besides, it is still unclear if reducing price really is of great importance in the Sourcing case.

The method used in this thesis, based on interviews, was more or less necessary. Since no precise theories were obtainable, there were not many other sources to use. I contacted different purchasing experts and I also tried to make some benchmarking, but the results were of no use. If the study were made over again, I would use about the same method. I think that the selection of persons was good and that the result would not differ considerably if five more persons were consulted. Perhaps would I, however, to a greater extent try to find external experts to get a more general view of the issue, for instance at the University. Moreover, it would be interesting to get the customer's view of this procedure to confirm or refute the most important criteria for Sourcing items.

9.3.2 Generalisation of the results

Every company's purchase organisation is unique, and it is therefore hard to say if this thesis' results could be applied in other cases. I think, however, that the results of suitable characteristics for a Sourcing supplier to a great extent could be used in many other low volume purchasing situations. Even if the company knows which supplier to use, it is most likely important that this supplier has a flexible machine park, that delivery times are low and that the company's position against the supplier is strong, to secure future supply.

9.3.3 Ideas of further studies

The research made within the purchasing area is in most cases focused on what strategy to use for the most important and profitable products. This thesis has briefly entered the area of less profitable products, which nevertheless have to be offered by the company. Further studies could get deeper into the problem of strategies for low volume purchasing and suggest more general strategies. The strategies should also to a greater extent include the suppliers' view of the issue, to find solutions that are optimal for the entire supply chain.

References

Literature sources / Articles

Bell Judith, *Introduktion till Forskningsmetodik*, Second edition, Studentlitteratur, Lund, 1995.

Hill Terry, *Manufacturing Strategy*, Second edition, Palgrave, New York, 2000.

Huiskonen Janne, *Maintenance spare parts logistics: Special characteristics and strategic choices*, Internal Journal of Production Economics 71, Issn: 09255273, Elsevier Science, 2001.

Kompendium i Produktionsledning för I-avslutningen, Avd. för Produktionsekonomi vid Lunds Tekniska Högskola, KFS i Lund AB, 2001.

Mattson Stig-Arne, *Logistik i försörjningskedjor*, Studentlitteratur, Lund, 2002.

Rundqvist Thomas et al, *Kompendium Tillverkningssystem*, Institutionen för Mekanisk Teknologi och Verktygsmaskiner, Lunds Tekniska Högskola, 1998.

Wallén Göran, *Vetenskapsteori och forskningsmetodik*, Second edition, Studentlitteratur, Lund, 1996.

van Weele Arjan J, *Purchasing and supply chain management*, Third edition, Thomson Learning, London, 2002.

Interviews

Sourcing purchasers at Tetra Pak GTS AB
Eva Hellberg, 2003-11-21
Irene Asplund, 2003-11-21
Elizabeth Hejde, 2003-11-24
Ulrika Axwik, 2003-11-24

Management at Tetra Pak GTS AB
Merkenius Robert, Manager Inventory Management, 2003-11-17
Stefan Boekhoff, Manager GTS Purchasing, 2004-01-22
Anders Ekberg, Manager Purchasing Development, 2004-02-13

Other experienced persons at Tetra Pak GTS AB
Margit Prassl, Operative purchaser, 2003-11-25
Benny Ljungberg, Operative purchaser, 2003-11-25
Anders Gustafsson, Operative purchaser, 2003-11-25
Zenny Stjernberg, Purchaser, 2003-11-25
Per Simonsson, Supply Manager, 2003-11-26
Åke Pettersson, Project Leader, 2003-12-04
Bertil Karlsson, Purchasing Coordinator, 2004-01-20
Ola Holmqvist, Supplier and Development Certification Officer, 2004-02-23

Suppliers
Leif Landgren, Clico Verken AB, 2004-01-27
Bengt Olsson, BGT Components AB, 2004-01-28
Lars Wirén, Wirén & Persson Plåt & Mek AB, 2004-02-04
Henrik Larsson, Larssons i Bjärred Mekaniska verkstad AB, 2004-02-10

Other sources

Conversations
E-mail conversation with Håkan Nordahl, Lecturer at the Dept of Production Management at LTH, Nov 2003.

Conversation with Nils-Erik Mårtensson, Purchaser at Tetra Pak GTS AB, February 2004.

Presentation material from GTS' internal web
Carlsson Peter, *Long term direction Strategic focus 2003*, 2003-03-21
Larsson Matts, *Parts Supply Chain – General Presentation*, 2003-03-14
Martinsson Linda, *OTF Process Mapping*, 2003-10-30

Appendix 1

Concept definitions

- **Sourcing purchasing:** Purchases of non-forecasted material that do not have a predetermined supplier or have not been bought for a long time, and, as a consequence, have no price or delivery time set. Purchasers within the former OTF (Order-To-Fulfilment) department handle this kind of purchase.
- **GTS purchasing:** This department makes the strategic purchase decisions within GTS.
- **IM (Inventory Management):** The IM department handles the operative, every day purchases. Today, it is also the unit of the Sourcing purchasers, which is one of the reasons why this department assigned this thesis.
- **Drawn/Standard components:** A drawn component is an item of which Tetra Pak owns the specification, unlike standard components, where other companies own the design.
- **Big/small supplier:** A big supplier is a supplier with a high rate of its turnover to Tetra Pak. This supplier has a high Tetra Pak dependency. On the other hand, a small supplier is a supplier where Tetra Pak is a small customer. Tetra Pak has less influence on small suppliers, which are not as dependent on Tetra Pak.
- **System supplier:** A system supplier is supplying whole modules (systems) for the Tetra Pak machines. GTS is also buying spare parts from them. See also chapter 3.2.2.
- **Family supplier:** This is a term used for a smaller amount of suppliers that should be used in a project where items were family classed by type and/or material. The project does not exist anymore, but the expression still lives. See also chapter 6.1.
- **C-list:** A C-list is a list of all spare parts included in one section of a machine. This could vary from two to as much as hundreds of different parts. The normal situation is that the customer wants to know price and lead-time for one of these parts, but sometimes it wants information about the entire section, which means a lot of work for the purchaser as well as for the suppliers.

Appendix 2

Questions for internal interviews

Sourcing Purchasers

- Which is your area of responsibility? How does your day at work look like? How many inquiries do you get per day? How much time is spent on finding/choosing suppliers?
- How do you choose which quotation to use? Do you pick the supplier that has the fastest responding time, or..?
- How big share of the inquiries result in an order?
- What characterises a Sourcing purchase?
- What is most important for the customer – Price or lead-time?
- What do you think about the idea of having pre-determined suppliers for the most frequently bought product groups?
- Which suppliers do you think is the most appropriate for this purpose? Why?

Management

- Which are the most important tasks/strategies for GTS purchasing within a close future?
- Is the Sourcing purchase to some extent included in the overall strategy today?
- What is your personal view of Sourcing-purchasing? What is the biggest problem today? How shall the problems be solved, acc to you?
- What do you think is the biggest mismatch today between the GTS Purchase strategy and Sourcing purchase? (Quantities, phase-out suppliers, etc?)
- Which/what sort of suppliers do you think is the best-suited Sourcing suppliers? Why?
- How does the future look like for GTS supplier strategy? Which type of suppliers does GTS want to phase out? Are there any suitable Sourcing suppliers among those?

Other experienced GTS persons

- How do you experience the Sourcing work? Which are the problems today?
- What do you think about the idea of having pre-determined suppliers for the most frequently bought product groups? Which are the pros/cons of the concept?
- Which suppliers do you think is the most appropriate for this purpose? Why?
- Do you think that it is more important that the supplier has a suitable layout or that Tetra Pak is a large customer to reach the highest service level? Why?
- How do you think that the problems best should be solved? Why?
- Which strategy do you think is the most appropriate for this kind of purchase and suppliers?
- How could the Sourcing process be more efficient – from GTS' view and from the supplier's view?

Appendix 3

Questions for supplier interviews

- A brief presentation of the company.
- Which are the trends within the manufacturing industry today?
- Which are the trends within supplier/customer relationships today?
- Which strategy, due to machine park, staff, access of raw material, size of customer, etc., should a supplier have to be successful within:
    - Low volume manufacturing?
    - High volume manufacturing?
    - Both? Is it possible to be competitive in both segments? What is needed to accomplish this?
- What is the biggest limitation when an item should be produced – the access of material or the production process?
- What is your general attitude to low volume manufacturing?
- How do you calculate the price of a quotation inquiry? How long does this take? How do you think the process could be more efficient?
- How do you estimate if it is worth manufacturing a part or not? Which criteria matter?
- How interested are you actually of this kind of orders? Why?
- What could GTS do with the low volume purchases to simplify the process for you?
- Further comments about Sourcing purchase. Does the supplier experience some kind of problems?

Appendix 4

The Sourcing purchase flow[30]

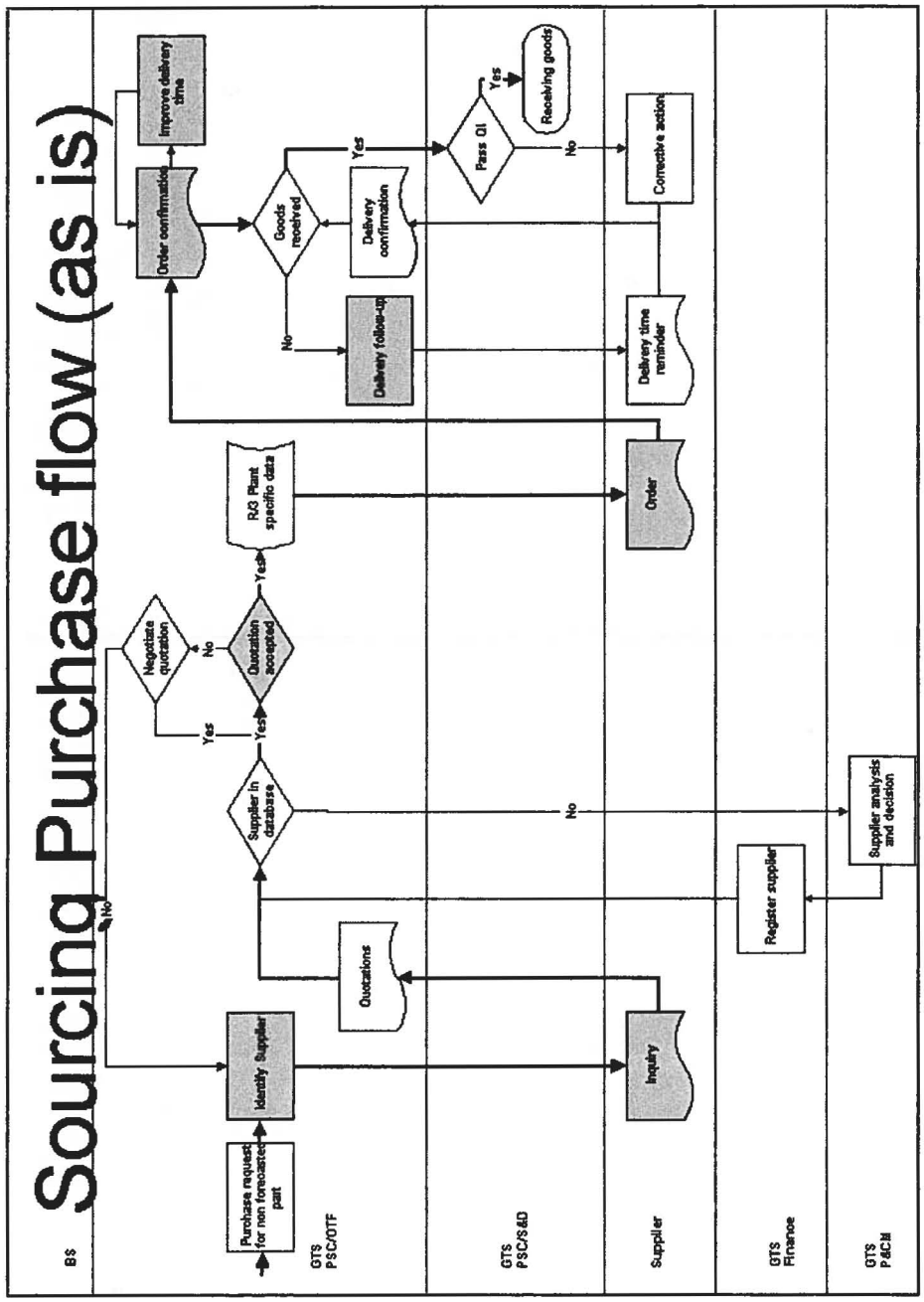

[30] Linda Martinsson, *OTF Process Mapping*, 2003-10-30.

Appendix 5

Supplier description

20 % of the Sourcing suppliers that represent 80% of the total Sourcing order rows:

Supplier	Description		
	System supplier	*Family supplier*	*Other*
Supplier 1		X	
Supplier 2	X		
Supplier 3	X		
Supplier 4		X	
Supplier 5	X		
Supplier 6	X		
Supplier 7			X
Supplier 8		X	
Supplier 9	X		
Supplier 10	X		
Supplier 17		X	
Supplier 14	X		
Supplier 18		X	
Supplier 19		X	
Supplier 12	X		
Supplier 20		X	
Supplier 16	X		
Supplier 21		X	
Supplier 22			X
Supplier 23		X	
Supplier 24		X	
Supplier 25		X	
Supplier 26	X		
Supplier 27	X		
Supplier 28			X
Supplier 11			X
Supplier 29		X	
Supplier 13			X
Supplier 30			Specialist
Supplier 31	X		
Supplier 32		X	
Supplier 33		X	Specialist
Supplier 34			X
Supplier 35		X	
Supplier 15	X	X	
Supplier 36	X		
Total	**14**	**16**	**7**
	38%	**44%**	**18%**

Appendix 6

Pre-requirements questionnaire

Criteria	Level 1 (lower level)	Level 2 (higher level)
Organisation Profile		
Account Management	one (only one) reference point is identified	Key account Management function
International availability	Technical support in all countries where TP has Machine Production, R&D and After Sales (RDC)	Technical support in all countries where TP has Machine Production, R&D and After Sales (RDC). In country correspondence with Tetra Pak Processing Systems 10-12 largest Market Companies
Company Size		
Turnover to TP	<= 60%	<=40%
Financial Results		
UC Rating	Green	-
Quality Profile		
Quality System	ISO 9001 or equivalent Third Part Certification	- QS9000 or equivalent Third Part Certification - QA plans per products groups
Communication		
e-mail	e-mail available per each reference person	-
Internet	Access throught Internet	- Own Homepage - TP specific Homepage
Design tools	CAD model accoding to TP specification	- Pro-E - CEP - Broad Band
Environment Profile		
Environmental System	Approved TP Environmental Assessment	-
Technical Standards		
International Standard	Knowledge about applicable Directives and international standards, e.g. Directive 89/109/EEC	Knowledge about applicable Directives and international standards, e.g. Directive 89/109/EEC Participating in international standadisation working groups.