IIIEE Master's Theses 2003:6

Jatropha Oil as a Renewable Fuel for Road Transport

Policy implications for technology transfer in Tanzania

Bukaza Chachage

Supervisors

Mårten Karlsson

Allan Johansson

Thesis for the fulfilment of the

Master of Science in Environmental Management and Policy
Lund, Sweden, October 2003

The International Institute for Industrial Environmental Economics
Internationella miljöinstitutet

Published in 2003 by IIIEE, Lund University, P.O. Box 196, S-221 00 LUND, Sweden,
Tel: +46 – 46 222 02 00, Fax: +46 – 46 222 02 10, e-mail: iiiee@iiiee.lu.se.
Printed by KFS AB, Lund.

ISSN 1401-9191

Acknowledgements

Always, an intellectual journey is not a one-person show. To this end I would like to take this opportunity to extend special thanks to a number of people and institutions:

First, the IIIEE, Sahlen Foundation and UNEP for making my study visit in Sweden possible.

The number of people who provided different support is very large and this space could not accommodate them all, therefore I register a general thank you to all for your support during 14 months of my study visit at IIIEE, Lund University, Sweden. However, the following few people deserve a special mention in this limited space:

My supervisors Dr. Mårten Karlsson and Prof. Allan Johansson: thank you for reading my drafts and providing constructive comments.

My respondents from D1 Oils Tanzania Ltd, ARI Monduli project, Renewable Energy section in the Ministry of Energy and Minerals, Media and Information Communication Dept. in the Ministry of Agriculture, and special thanks to Peter of Kikuletwa farm: you simply made my thesis life in Tanzania possible. Thank you so much for sharing with me your Jatropha experience.

My dearest students of batch 7: thank you for your friendship when I went back home, Luis Mundaca in particular, you were instrumental in creating the right atmosphere for me to come back and be in my own batch 7.5. I am very pleased with you my friend.

Andreas, Andrea, Pranshu, Levan, Alissa, Kate, Rodrigo, Steffan, Xihua, Inge-Marie, AnnaT, Mika, Juan and Ramon: You are my colleagues and friends. But, I think it is fair at this particular moment of time to call you COMRADES. I count myself lucky to be with you in the same class in Sweden. I really enjoyed your company! The excellent personal relationship we have enjoyed from the very beginning has been the bedrock for me finishing the programme. I hope our relationship will become even more intense in the years to come.

Adriana: Thank you for accommodating my last stay in Lund.

My wife Kristeen: for your love, understanding, encouragement and trust in me. You are the best, Kristeen, words cannot express how grateful I am.

Finally, I would like to invite you all to share the joy of my thesis and I will take responsibility for any mistakes in this work.

Abstract

Quite recently, the use of Jatropha oil as a renewable fuel for road transport has gained special attention by various stakeholders worldwide who are advocating the use of renewable fuels in the road transportation sector. There are many success stories in using Jatropha oil as renewable fuel in Africa. In Tanzania, D1 Oils Limited is making strides in developing the Jatropha plant as a source of renewable fuel for road transport. The ARI Monduli project is also using Jatropha plant products to solve rural energy problems.

Apart from these developments to exploit Jatropha oil as a fuel for road transport, this study reveals the following policy challenges that need to be addressed in order to deploy Jatropha technology as a viable renewable fuel for road transport in Tanzania. Firstly, there is a monopoly orientation for Jatropha development in Tanzania. Secondly, some important stakeholders, such as policy makers and Jatropha product users, lack information on Jatropha development and usage. Thirdly, there is a lack of both short term and long term financing for Jatropha development for rural dwellers in Tanzania. Finally, there is lack of a local market for Jatropha fuel and no appropriate contractual framework in Tanzania. The study suggests specific recommendations for each policy challenge.

Executive Summary

Jatropha activities are attractive because they are viable in adverse conditions and may help to counter drought, desertification, soil degradation, and climate change and to increase permanent crops and protection of biodiversity in tropical and subtropical developing countries, and Tanzania in particular. Additionally, Jatropha undertakings provide a synergy of rural energy production, environmental protection and food security by erosion control, acting as a living fence to protect from water and wind, increasing income of rural dwellers, promoting women and providing renewable fuel. The fact that a huge amount of foreign currency is used to import mineral fuels from abroad raises the demand for using an alternative, locally produced fuel as an extender or substitute to mineral diesel and paraffin. Furthermore, the high number of unpaved roads, particularly in remote areas, makes transporting petroleum products to rural areas very difficult. This increases the need for seeking a local fuel solution.

Recognizing the fact that Jatropha oil can be used to substitute mineral diesel and reduce many problems associated with the use of non renewable fuels while being guided by a successful pilot project for the same in Mali, UNEP funded this study in order to assess the policy implications for using Jatropha oil as renewable fuel for road transport in developing countries and Tanzania in particular. In order to assess the policy implications for using Jatropha oil as renewable fuel for road transport the study answer the following research questions:

- What are the technology and process issues for the extraction and use of Jatropha oil?
- What are the market and perception potentials for the Jatropha oil technology?
- What are the local and national supporting policies that guide the production and use of the Jatropha oil for road transport?

The study used two cases, D1 Oils Tanzania, Limited and ARI Monduli project that are currently involved with Jatropha activities in Tanzania. The study triangulated interviews, documentary, simple observation for primary data collection and literature review for secondary data collection. In order to draw conclusions on the assessment, the study focused on technology issues, market issues and policy issues as described in the Strategic Technology Evaluation Programme (STEP) framework.

In answering the first research question Jatropha seeds extraction technology such as manual ram presses and expellers could be found in Tanzania and nearby countries. The transesterification technology and knowledge for refining Jatropha oil could be transferred by direct foreign investment (FDI), Joint venture, licensing agreement, international subcontracting and turnkey contracts from various Biodiesel production experienced worldwide.

The study recommends the government to establish policies that put emphasis on the gradual development of plant oils technologies while encouraging knowledge adaptation when technology transfer is taking place in order for the indigenous community later to be able to develop these technologies locally. The government also is recommended to stipulate suitable models for technology transfer in the energy or renewable energy policy document and establish a policy support for short term and long-term loans with incentive effects from financial institutions and other various funding organizations to boost Jatropha activities development in the whole country particularly in rural areas.

In answering the second research question regarding the marketing issues the study reveals that D1 Oils Tanzania Limited, which seems to have a Jatropha monopolisation orientation,

has already defined UK market for Biodiesel and nothing has been done for Jatropha oil for road transport by the ARI Monduli project. However, ARI Monduli has been locally penetrating market of Jatropha oil for cooking stoves, for lighting and soap making. There will be Jatropha oil or seed transportation problem from rural areas to market places due to the poor rural transportation infrastructure.

The policy implication in this aspect is for the government to formulate a policy to stimulate local markets for the Jatropha products and exportation of surplus products. The government also needs to develop a policy to strictly restrict monopolization of the development of Jatropha activities in order to develop a fair balance of demand and supply. Another policy implication is for the government to facilitate the development of many demonstration sites that use Jatropha oil as a fuel for road transport. The government also needs to develop policies and procedures for Jatropha seminars, conferences and Jatropha uses demonstrations in a massive way to create customer, producer and other stakeholders' awareness. There is a need to have an institutional framework to guide Jatropha contracts or to develop a contractual model to help rural dwellers when signing contracts with Jatropha private investors.

In answering the third research question the study concludes that the awareness of Jatropha as a renewable source of fuel by policy making key players such as members of the Ministry of Energy is very low and there are some Jatropha information-hiding operations in Tanzania. However, some local policies imply the support of Jatropha development. To this end therefore, the development and technology transfer for a wider use of Jatropha oil as fuel for road transport in Tanzania requires a policy and an institutional framework to coordinate different ministries that should be involved in the development of Jatropha activities. The policy should coordinate the Ministry of Energy and the Ministry of Agriculture and other stakeholders. Another policy implication is for increasing awareness of Jatropha's benefits drastically by educating people on all that Jatropha offers and how it could be exploited for road transportation. There is also a need for a policy to support individual initiatives and to support Jatropha information dissemination to different stakeholders in order to have a high degree of awareness of Jatropha contributions to the rural community developments.

The specific recommendation regarding the third research question is that the government should increasingly participate in the development of the plant oils such as Jatropha plant since they seem to provide viable solutions to many rural problems. The government should link different ministries related to the development by establishing policy subcommittees to have collaborative policy statements. The government also needs to establish an energy information system that facilitates the dissemination and collection of renewable energies information from all players.

Table of Contents

List of Figures

List of Tables

1. Introduction

1.1 Background to the problem

Jatropha activities are attractive because they are viable in and may help to counter drought, desertification, soil degradation, and climate change and to increase permanent crops and protection of biodiversity in tropical and subtropical developing countries and Tanzania in particular. The high number of unpaved highways in comparison to paved highways in Tanzania demands the use of alternative, locally produced fuel as extender or substitute of diesel and paraffin to reduce the amount of money used for importation of this resource and to solve the difficulties of transporting petroleum products to remote rural areas

Furthermore the fact that petroleum products are non-renewable resources, which eventually will run out and the fact that petroleum products have many environmental impacts, which deteriorate air quality and act as the main source for global warming are challenges that call for alternative renewable clean energy sources in all sectors, particularly the road transport sector. The success of a pilot project for using Jatropha oil instead of diesel in Mali and the successful test for the same in Germany[1] raise practical concerns regarding policy implications for the transfer and deployment of relevant technologies and practices in order to diffuse Jatropha technology on a wider scale and use the energy content of the plant as a fuel for road transport in developing countries such as Tanzania.

Tanzania depends heavily on the import of petroleum products for most of its transportation sector. The annual demand for petroleum products is 1.2 million tonnes. The average import value of petroleum products per year is USD 190 million, which is more than a quarter of total foreign currencies earned in the country per year. The transport sector alone consumes 40% of all petroleum products imported, followed by manufacturing 25%, households 10% and the remaining is accounted for by agriculture and commerce.[2] Tanzania engaged in Jatropha activities for energy services as a way of finding a local solution for household fuel and reducing the foreign fossil fuel dependence that has fluctuating prices since 1990s.[3] The existence and the fast increase of Jatropha activities as one of the local solutions for energy services in developing countries is well represented in the German based Jatropha information web site.[4] Additionally, many scholars, for example Henning[5], provide hands on evidence of a very strong positive association between Jatropha activities and rural economic growth and poverty reduction in developing countries. However, a large part of the body of knowledge regarding the Jatropha plant is inconclusive about the exact policy implications for Jatropha technology transfer and diffusion in order for Jatropha oil to be used as a fuel for road transport. Most likely the better performance of Jatropha oil as a renewable fuel for road transport depends on the implementation of policies that ensure reliability of Jatropha oil in terms of supply and uses. Many previous Jatropha studies reviewed in this study have focused

---

1 Alexander's Gas & Oil Connections (2001). Jatropha Oil Instead of Gas – Oil. *News & Trends: Africa Volume* 6: 6, 22-03-2001

2 Ministry of Energy and Minerals. (2002*). The national Energy Policy*, The United Republic of Tanzania government publication, p. 21

3 Interview with Mr. Manyanga Livanus, Project coordinator ARI Monduli Jatropha Project

4 Many internet information on Jatropha activities worldwide could be accessed at http://www.jatropha.org

5 Henning, (1998). Use of Jatropha Curcas L. (JCL): A household perspective and its contribution to rural employment creation. Experience of the Jatropha Project in Mali, West Africa, 1987-1997. *Regional workshp on the Potential of Jatropha Curcas in Rural Development and Environment Protection: A workshop sponsored by the Rockefeller Foundation and Scientific & Industrial Research & Development Centre*, 13 – 15 May 1998, Harare, Zimbabwe

on the benefits and problems of Jatropha plants while leaving out the aspect of policy implications for deploying Jatropha technology on a wider scale in developing countries where Jatropha activities are carried out such as Tanzania. To this end, therefore, the study assesses the policy implications for deploying relevant technologies and practices in order for Jatropha plant to be used as source of renewable fuel for road transport. The assessment provides arguments for a wider exploitation of Jatropha plant products in Tanzania.

1.2 The problem statement

One of the selling arguments for a successful transfer and diffusion of technology is for the technology to be environmentally, economically, socially and culturally sustainable. These attributes in many cases support the uptake of the technology and encourage community involvement in the diffusion of the technology. The uses and sustainability benefits of Jatropha plant for community development particularly rural community development in developing countries is comprehensively demonstrated by many scholars, for example Henning and Gubitz [6, 7], to mention but a few. The Jatropha plant provides a combination of solutions to various rural problems, such as erosion control, promotion of women, poverty reduction and renewable fuel. However, there is a policy gap to facilitate plant oils and Jatropha plant in particular as a source of renewable fuel in the national energy policy in Tanzania. Due to many benefits of Jatropha plant for rural development there is need for a policy to guide the development and use of Jatropha plant as source of renewable fuel. To this end therefore, this study assesses the policy implications for utilizing Jatropha oil as a renewable fuel for road transport in order to fill the policy gap identified above. The study recommends policy measures for deploying and diffusing Jatropha technology and practices on a wide scale in Tanzania.

1.3 The purpose of the study

The general purpose of the study is to describe the Jatropha plant, its usage and infrastructure with special focus on the assessment of policy implications in respect to deploying and transferring Jatropha technology as a renewable fuel for road transport in Tanzania.

1.4 Specific objectives

The specific research objectives are threefold:

- To describe Jatropha technology and its production infrastructure, with special focus on the seed oil extraction and uses of the Jatropha oil.
- To determine market potentials and community perception of Jatropha technology package as renewable fuel.
- To examine Tanzania local and national supporting policies for exploiting Jatropha oil as fuel for road transport

1.5 Research questions

The research questions are:

- What are the technology and process issues for the extraction and use of Jatropha oil?

---

[6] ibid

[7] Gubitz, *et al.* (1999). Exploitation of the tropical oil seed plant Jatropha curcas L. *Bioresource Technology,* 67: 73 - 82

- What are the market and perception potentials for the Jatropha oil technology?
- What are the local and national supporting policies that guide the production and use of Jatropha oil for road transport?

1.6 Scope and limitations of the study

The study was limited to policy implications for Jatropha technology diffusion and transfer on a wider scale in Tanzania. The scope of the study was all Jatropha products, technology used for Jatropha oil extraction and general infrastructure for Jatropha oil as renewable fuel. Due to limited time and resources, the study dealt with only two cases that were easily accessible and formally operating in Tanzania with supplemental information from ministries and very little information from individual Jatropha initiatives.

1.7 Structure of the thesis

The following is an annotated thesis organization:

CHAPTER ONE: ***Introduction***

This chapter presents the general introduction of the study that includes the background of the study, the statement of the problem, purpose of the study, objectives, research questions, scope and limitations of the study, definitions of terms, structure of the report and brief profile of the country and cases under study.

CHAPTER TWO: ***Methodology***

This chapter presents the entire study research design. The chapter also presents the research strategy used and its justification, data collection methods, data analysis techniques, content and format of the data collection instruments.

CHAPTER THREE: ***Literature review***

This chapter provides general overview of Jatropha and its products (from planting to final products). The chapter also presents the review of processes involved for using Jatropha oil as diesel substitute or extender. The chapter also presents a brief note on the different views of economic feasibility of using Jatropha oil as a substitute or extender for diesel or paraffin.

CHAPTER FIVE: ***Findings and discussion***

This chapter presents the empirical findings and discussion around the findings.

CHAPTER SIX: ***Policy implications, conclusions and recommendations***

This chapter provides study conclusions, policy implications and specific recommendations. The chapter also present general recommendation together with recommendations for further studies.

1.8 Definition of terms

Biodiesel

Is a biofuel produced through transesterification, a process in which organically derived oils are combined with alcohol (ethanol or methanol) in the presence of a catalyst to form ethyl or methyl esters. The oil derived ethyl or methyl esters can be blended with conventional diesel fuel or used as a neat fuel (100% biodiesel).[8] In this study methyl ester, ethyl ester or Biodiesel will be used interchangeably.

Renewable oil

Renewable Oil (RO) is the oil, which can be annually renewed primarily by solar inputs, [and] can be made suitable for long-term use…[9]. The study adopts Begges' definition and uses Jatropha oil or renewable oil interchangeably for the entire study.

Technology Transfer

Technology transfer is the process by which science and technology are transferred from one individual or group to another that incorporates this new knowledge into a new or improved process, product, system or way of doing something. [10] Another scholar defined technology transfer as a diffusion and adoption of new technical equipment, practices and know how between actors within a region or from one region to another.[11] Since the introduction of Jatropha oil for road transport is a new knowledge to Tanzanians even though Jatropha activities have been going on for many years, the study adopts the above definitions of Technology Transfer. The study takes a special note on the later definition that the technology transfer could take place within the country using locally available technology and knowledge or from abroad. In this case the technology transfer could be transferring the technology from abroad using different transfer models such as joint venture, foreign direct investment and so on or diffusing in wider scale a locally developed technology within the country.

Thermal efficiency

The ratio of heat converted into motive power against total heat generated during combustion.[12]

---

8 The definition is taken from Medical dictionary search engine at http://www.books.md/B/dic/biodiesel.php

9 Beggs (1997). *Renewable Oil fuels and Diesel Engines as Components of Sustainable Design*

10 Jain, *et al.* (2003). "Evaluating the commercial potential of emerging technologies", *International Journal of Technology Transfer and Commercialisation,* Vol. 2 (1): p. 33

11 Wilkins, G. (2002). Technology Transfer for Renewable Energy: Overcoming Barriers in Developing Countries, p.43

12 http://www.isuzu.co.jp/world/technology/clean/diesel_gasoline02.html

1.9 Brief country profile and overview of the cases

1.9.1 United Republic of Tanzania

In order to provide the readers with context and to address the issue of renewable energy policy and the implications for using Jatropha as a renewable fuel for road transport in Tanzania, it is important to have an overview or a brief profile of the country.

Figure 1-1: Location of Tanzania in Africa[13]

The United Republic of Tanzania, or Tanzania, is the union of two countries: Tanganyika (mainland) and Zanzibar (islands). The climate of Tanzania varies from tropical to temperate along the coast and highlands respectively. The major natural resources are potentials of hydropower, tin, phosphate, iron ore, coal, diamonds, gemstones, gold, natural gas and nickel. The land distributions based on use in Tanzania are 3% arable land, 1% percent permanent crops, 40% permanent pastures, 38% forests and woodland and 18% others. The major means for transportation are railways which cover 3 569 km in total and highways, with total 88 000 km that has only 3 696 km paved and the remaining 84 304 km unpaved. Tanzania has 110 airports, 39 with paved runways and 71 with unpaved runways. Tanzania has a pipeline of 982 km to transport crude oil. The waterways are in Lake Tanganyika, Lake Victoria, Lake Nyasa and the Indian Ocean. The ports and harbours are Bukoba, Dar Es Salaam, Kigoma, Lindi, Mkoani, Mtwara, Musoma, Mwanza, Tanga, Wete and Zanzibar.[14]

The population of Tanzania is 32 million as per 2002 national census. Tanzania is one of the poorest countries in the world. The major economic activity is agriculture, which provides 57% of the GDP, 85% of the exports and 90% of employed workforce in the country. However, the climatic conditions limit the agricultural development in the country. Industries account for 17% of total GDP and are mainly light consumer goods and agricultural products processing industries. The agricultural products processed are sugar, beer, cigarettes, sisal and wine. Others are diamond and gold mining, oil refining, shoes, cement, textile, wood products and fertilizer.[15]

The electricity capacity of the country is 440 000 kW (1994). The electricity production is 1.91 billion kWh (1994) and the electricity consumption per capita is 60 kWh (1994). The current environmental issues are soil degradation, deforestation, desertification, destruction

---

[13] The source of the map is from Marandu, E.E. (2002). The prospects for local private investment in Tanzania rural electricafication, Energy Policy, Vol. 30:.,p.977

[14] Tanzania at http://www.odci..gov/cia/publications/factbook/tz.html

[15] ibid

of coral reefs and droughts that affect marginal agriculture.[16] Tanzania is a party to many international agreements such as Biodiversity, Climate Change, Endangered Species, Hazardous Wastes, Law of the Sea, Nuclear Test Ban, Ozone Layer Protection, Whaling and Desertification (Signed without ratifying as of 1997) and Kyoto Protocol.[17]

1.9.2 A brief note on ARI Monduli case

ARI Monduli stands for Alternative Resource Income for Monduli women. ARI Monduli is a Jatropha project situated in Arusha region in northern Tanzania. The project is being operated as a coalition of three non-profit organizations, Heifer Project International (HPI), Global Environmental Facility (GEF) and Faida, and one limited company KAKUTE limited. The main objective of the project is to create awareness on the different uses of Jatropha products among women in the northern part of Tanzania, specifically Maasai women who own a lot of Jatropha plants without exploiting uses of the plant such as energy uses. Another objective of the coalition is to make sure that the knowledge of Jatropha technology is disseminated to these women. The project had a goal to meet household Jatropha uses such as soap making, household energy needs such as cooking and lighting and using Jatropha oil in the transportation sector.[18] The roles of different organizations in the coalition are presented and discussed in the ARI Monduli case study.

1.9.3 A brief note on the D1 Oils Tanzania Limited case

D1 Oils Tanzania, Limited is a Tanzanian registered company to deal with plant oil, particularly Jatropha Curcas and Moringa olifeira. Since the main company D1 Power Technology is a UK based company, the model of this Tanzanian registered company could be regarded as a foreign direct investment (FDI). D1 Oils also has a branch operating in South Africa with the same objectives of reforestation by using plant oils. The main objective of the company is to create a big business and initiate the exploitation of plant oil products. Their main focus is the exploitation of fuel from the Jatropha plant and Moringa plant, and acquiring carbon credits for owning Jatropha and Moringa forests in large quantities. The Moringa plant is not discussed further due to the differences in the production activities. In Tanzania, the company plans to have an oil purification station in every district in the country.[19] The company's operations based on the study objectives and the discussion are presented in the D1 case study section.

---

[16] ibid

[17] ibid

[18] Interview with the project coordinator who is also the director of KAKUTE Mr. Manyanga, Livanus

[19] Interview with the country director of the Company Mr. Malcolm Doherty

2. Methodology

2.1 Research design

The research design provides both a picture and a definite plan of the methods used in the study. The research design provides the blueprint of where the study was carried out, what type of data was collected, where the data were collected, what technique of data collection was used and how the data were analysed.[20] It was noted that when thinking of a research design the question that appears first is 'which research design is the best?' The fact is there is no accepted uniform standard of a research design for every study. A good research design for one study might be very unsuitable for another study.[21] In other words Mikkelsen cautioned that the nature of the study determines the research design. Based on the nature of the study this study used case study strategy, and interviews and documentation for data collection as described below.

2.1.1 Case study method

The case study method can be defined as an empirical inquiry, which investigates a contemporary phenomenon within its real life context especially when the boundaries between phenomenon and context are not clearly evident.[22] Case studies are studies of particular individuals but they could also be studies of single family units or social policies. The method identifies a phenomenon of interest and then selects a case to investigate the manifestations of the phenomenon in real life. The strength of the case study is its ability to study a situation with its context.[23] In addition to the above, it is argued that case studies are appropriate for studies which aim to provide an in depth description of a small number of cases.[24]

The purpose of this study was to assess the policy implications for deploying and transferring technology in order to use Jatropha oil as a renewable fuel for road transport in Tanzania. The focus of this study therefore was on the formal and informal established Jatropha activities in Tanzania that have started to realize the potentials of Jatropha as a source of renewable energy. Based on accessibility, this study selected D1 Oils Tanzania, Ltd that has it offices in Dar Es Salaam and the Coalition of Kampuni ya Kusambaza Teknolojia (KAKUTE), Heifer Project International (HPI), GEF and Faida, which collaboratively run the ARI Monduli project. The study also supplemented the information gathered from these cases with information from individual Jatropha initiatives and the Ministries of Energy and Agriculture as stakeholders in Jatropha activities in Tanzania.

This study was guided by the proposition that in order for any technology transfer process to be successful there is a need for established institutional frameworks and supporting policies to guide the development. The generalization and conclusions made by the study are based on the argument that the method of generalization for case studies is not statistical

---

[20] Kothari, (2000). *Research methodology: methods and techniques*

[21] Mikkelsen. (1995: 235). *Methods for development work and research: a guide for practitioners.*

[22] Yin, R. K. (1994:13). *Case Study research, design and methods*

[23] Lindegger (1999:255). *Research methods in clinical research,* In Terre Blanche, M. and Durrheim, K. (eds) (1999. *Research in practice: applied methods for the social sciences*

[24] Mouton, J. (2001:149). *How to succeed in your master and doctoral studies: a South African guide and resource book*

generalization, but analytical generalization in which a previously developed theory is used as a template with which to compare the empirical results of the case study. It was further noted that "if the two or more cases are shown to support the same theory, replication can be claimed…The greater the number of case studies that show replication the greater the rigour with which a theory has been established."[25]

2.1.2 Unit of analysis

The unit of analysis is the person or objects from whom the researcher collects data.[26] In this study therefore, the unit of analysis was two cases ARI MONDULI and D1 OILS Tanzania LtD. However, empirical data were collected from staff of the two cases and supplemented by data from individual Jatropha initiatives, a women's group dealing with Jatropha activities, staff of renewable energy department in the Ministry of Energy and the Ministry of Agriculture's Department of Media and Information Communication.

2.1.3 Data collection techniques

In this study two types of data were collected: primary data and secondary data. There are several methods for data collection, but mainly one could use questionnaire, interviews and observations.[27] [28] It has been argued that the best method for data collection is using multiple strategies.[29] The study, therefore, triangulated interviews, simple observation and documentary for primary data and literature review was used for secondary data as described separately below.

2.1.4 Primary data collection

This section describes the methods used for primary data collection. In a nutshell, as noted above, the primary data were collected using interviews, simple observation and documentary methods.

2.1.4.1 Interviews

Interview is one of the major data collection methods. There are three main types of interviews: Structured, semi-structured, and unstructured interviews. The basic characteristics of interview are that it is a direct, face to face exchange of information, there is an interaction of researcher and interviewee and there is verbal and non verbal communication like eye contact, facial gesture, body language, posture, tone and voice.[30] This study adopted semi-structured interview. The main reason for using semi-structured interview is the fact that the method allows the researcher to repeat and adjust wording of the interview. The method also gives an opportunity to add some supplementary questions if necessary.

The main advantages of interview over other data collection methods is the fact that it allows interpersonal interaction; it also allows supplementary questions to be added where the researcher needs more information; it gives the researcher an opportunity to clarify confusing

---

[25] Rowley, (2002:20). Using case study in research. *Managing research News*
[26] Bless, C. and C. Higson-Smith. (1995: 64). *Fundamentals of social research methods: an African perspective*
[27] Kothari. (2000).,op. cit
[28] Bright (1991). *Introduction to research methods in postgraduate theses and dissertations*
[29] Mikkelsen.(1995)., op cit. p. 81
[30] Bright. (1991)., op.cit., p. 59

questions; it is flexible and most important, it provides a high response rate. In addition, interviews facilitate the observation of respondents, which gives the researcher a chance to differentiate fiction and facts. [31, 32]

On the other hand, it has been pointed out that interview is subject to a high level of researcher's subjectivity.[33] The subjectivity mentioned by Young might destroy the meaning of the whole research. This is because gestures, facial expression and body languages might have unwarranted and wrong interpretations depending on the culture of the organization and the people interviewed. Furthermore, Young also mentioned a faulty memorization of a conversation. The memory issue was tackled in this study by taping all the interviews. The subjectivity issues were solved by using interview protocol that was administered to all the key players in the Jatropha activities in Tanzania. The data presented do not include the supplemental questions that were asked during the interview in the course of reducing subjectivity.

2.1.4.1.1 Content and format of interview protocol

Due to the nature of the study, interview protocol questions consisted of only open-ended questions (See the Appendix IV). Most of the questions were adopted from the Strategic Technology Evaluation Programme (STEP) model. The questions were divided into three sections corresponding to the specific objectives of the study, which also reflect the major components of the STEP framework (See the Appendix III and section 3.1 for STEP framework). The first part sought to describe the technology issues. The second part aimed at exploration of the market and people's perception of issues. The last part, which is the major part, focused on the policy issues.

2.1.4.2 Observation, documentary and informal discussion

Observation is a data collection technique based on the direct observation of a participants' behaviour.[34] In order to gain insights into the real situation on the Jatropha farms, the researcher spent a day observing Jatropha activities in a farm and demonstration of the Jatropha product uses. The study used simple observation where the researcher observed the planting of Jatropha and activities up to the level of using the Jatropha products. However, the researcher did not observe the use of Jatropha as fuel for road transport. The researcher also watched a documentary video of women's groups that are dealing with Jatropha activities in Monduli district that was prepared by the Ministry of Agriculture Media and Information Communication Department. Informal discussions were held in the Ministry of Energy and Agriculture with individual Jatropha initiatives. The main purpose of the informal discussions was to discuss with relevant departments in the ministries regarding their views on the available policies and policy implications for Jatropha technology transfer in Tanzania

---

[31] Bright. Ibid

[32] Huysamen, G.K. (1994). *Methodology for social and Behavioral sciences.*

[33] Young, P. (1994). *Scientific Social Survey and Research*

[34] Bless, C. and C. Higson-Smith. Op.cit.,p. 155

2.1.5 Secondary data

Since the area of study is relatively new, secondary data were used to build the study on existing experiences. The secondary data were collected through a review of published and unpublished literature. The review was done in books, journal articles, research reports, thesis reports, conference proceedings, newspaper articles and electronic materials. These materials were consulted from the International Institute for Industrial Environmental Economics (IIIEE) library and University of Dar Es Salaam, Tanzania library.

2.1.6 Data collection procedures

The interview protocol with pre-prepared questions was administered to the D1 Oils Tanzania Limited Country Director, Director of KAKUTE Ltd, Deputy director of HPI, Director of Faida, and Director of GEF together with a field officer of GEF. In the case of observation, the researcher visited the Jatropha farm and attended the demonstration session of the multiple uses of Jatropha that was done by KAKUTE Ltd. staff. In the case of documentary, the researcher watched the documentary video of women groups in Monduli district dealing with Jatropha farming prepared by the Department of Media and Information Communication in the Ministry of Agriculture and took notes. The data in the farms and in the demonstration were used to build the researcher's understanding of the multiple uses and growing of the Jatropha plants in real life experience.

2.1.7 Data analysis methods

The data from all the methods were analysed using content analysis method. In this method, data are categorised based on key issues and after discussion conclusions are made. In this case data were categorised based on our main three themes - technology, market and perception, and supporting policies. Information gathered which did not fall into one of these themes was not considered in the discussion or the conclusions made by the study.

3. Literature review

3.1 STEP framework description

The study adopted a framework used to evaluate commercial potentials of new technologies. The technology assessment frameworks identified were Market Opportunity Analysis (MOA) framework, Business plan framework and Strategic Technology Evaluation Program (STEP) framework. This study adopted the STEP framework. This framework partitions the evaluation into three parts: technology evaluation, market evaluation and regulation or policy evaluation,[35] thus going further than other frameworks, which concentrate on market evaluation. As policy implication is the main focus of this study, the STEP framework was found suitable to guide the assessment of the use of Jatropha technology as a renewable fuel for road transport in Tanzania. Additionally, the comprehensiveness of the framework and the fact that STEP framework according to Jain, *et al.* could be used to predict factors that could affect technology diffusion or transfer are among the main reasons for its adaptation in this study.

In the three sections of STEP assessment, the first is technology evaluation, which deals with the monetary value of the technology attributes. The focus of the assessment is put on the applications and the special qualities of technology installation. The general purpose of this part of the evaluation is to determine how the technology works and if it is capable of achieving the desired results. Among the issues that are addressed in this part of the evaluation is the technology adoptability. In this case issues to be addressed in the evaluation are if the technology adds value to society and if the technology is disruptive to the normal way of life.[36]

The market evaluation deals with cost and benefit and market demand for the technology and technology products. The main objective is to determine if the benefits outweigh the costs and if the market demand is high enough to guarantee survival of the diffused technology. The market assessment also reveals the market segments and the market share of the technology. As part of the marketing aspect, the perception of the technology transferred is also assessed in this section of STEP framework. The perception assessments address the users' feelings regarding the technology.[37]

The regulatory or policy assessment provides guidance on evaluating regulations or policies for the use of the technology. The issues to be addressed in this assessment are the analysis of regulations or policy that might impact the use of the technology. This section of the STEP model also assesses incentives or disincentives for technology diffusion. The section also could address the barriers to technology diffusion[38]

---

[35] Jain, R.K. *et al.* (2003). Evaluating the commercial potential of emerging technologies, *International Journal of Technology Transfer and Commercialisation,* Vol. 2 (1): 32-50

[36] ibid

[37] ibid

[38] ibid

This study therefore, focuses mainly on the last section of the STEP framework that evaluates the policy issues for diffusing an emerging technology. Other issues in the framework will also be addressed but are not a major focus for the study. The following sections of the literature review will cover many areas that are not covered empirically.

3.2 Jatropha plant description

The Jatropha plant (Jatropha Curcas) or physic nut is a shrub or a small tree belonging to the genus *Euphorbiaceae*. The Jatropha plant originated from South America, but now the plant can be found worldwide in arid and semi arid tropical and sub-tropical countries. It is claimed that probably the plant was distributed from South America by Portuguese seafarers via Cape Verde Islands and Guinea Bissau to Africa and Asia.[39] The Jatropha plant can be grown in almost all types of soils. It can even be grown in very poor soil and still produce a high average yield of seeds. However, light sandy soil is the most favourable. The Jatropha plant is a multiple use plant. The different uses of Jatropha will be presented in another section of this chapter. The root system of Jatropha plant comprises 3 – 4 lateral roots and a vertical one that reaches 5m down in the ground. The Jatropha Curcas is a drought resistant plant that can live up to 50 years. Jatropha Curcas tolerates a minimum annual rainfall of 250mm and a maximum annual rainfall of 3000mm. The minimum depends on the humidity, the higher the humidity the less the minimum rainfall Jatropha can tolerate. Jatropha can be found from sea level to 1800m altitudes. The tree grows to a maximum height of nearly 8m. The Jatropha fruit maturation takes 45 – 50 days.[40] The plant starts producing yield 4 – 5 months after planting. The Jatropha trees produce a round fruit with a soft brownish skin, which have 1.5 – 3 cm in diameter and weigh 1.5 – 3 g. The seeds contain about 33% oil. The oil is pale yellow to brown in colour. The oil contains a toxic substance, curcasin that has strong purging effects.[41]

The harvesting period of Jatropha seeds differ in different countries depending on the humidity of the weather. For instance, Jatropha seeds are only harvested once in most regions of Tanzania, during the period of August to September [42], while in Cape Verde the Jatropha seeds are harvested twice, in June or July and October or November. In general, fruits are picked from the plant or sometimes the fruits ripen in the tree and fall down, and thereafter are picked for processing.[43] Since the harvesting period and number of harvesting periods is different from different countries, the conclusions that reflect the harvesting period and numbers will also be different from place to place.

3.3 The cultivation of the Jatropha plant

Normally in Tanzania and other countries where Jatropha is widespread like Mali, Jatropha is planted as a fence or a protector of houses, gardens and food crop fields from browsing animals. The planting of the Jatropha plant can either be through the seeds, nursery or

---

[39] Heller, J. (1996). Physic Nut. Jatropha Curcas L. Promoting the Conservation and use of Underutilized and neglected Crops. In. Gubitz *et al.* (1999)

[40] Foidl, N. *et al.* (1996). Jatropha Curcas L. As a Source for the production of biofuel in Nicaragua, *Bioresource Technology*, 58: 77-82

[41] Axtell & Fairman. (1992). Minor Oil Crops, *FAO Agricultural Services Bulletin* No 94. [Online] http://www.fao.org/inpho/vlibrary/x0043e/X0043E00.htm#Contents

[42] Interview with managing director KAKUTE and ARI Monduli project coordinator Manyang Livanus June, 2003

[43] Axtell & Fairman (1992)., op. cit.

Jatropha cuttings. The seeds are planted straight in the prepared soil. In case of nursery, the seedlings are raised in a separate nursery and later planted in their permanent places. The cuttings are collected from existing Jatropha plants and then planted.[44] The last two approaches can be depicted in the following pictures from Zimbabwean Jatropha activities.

Figure 3-1: (a) The Jatropha nursery *(b) Jatropha cuttings*

Source: Environmental Africa: http://www.jatropha.de/zimbabwe/ea/ea-jcl-activities.htm

If Jatropha is planted in a Tanzanian tradition whereby it was planted as a fence for animal housing and as a mark for graves due to its long life span, and if it could be planted like in Mali whereby it is normally regarded as a living fence, there is no need for dedicating a piece of land for Jatropha activities. In this case arguments against the trade off between using land for energy purposes and for food purposes, which were raised in the article of Larson & Williams[45], will not hold for Jatropha.

The fact that Jatropha can also grow in degraded land opposes the trade off argument and provides a potential solution to overcome the political difficulties of dedicating productive land for energy plants. Additionally, there are some other arguments against the plant oil such as the use of fertilizers and pesticides in energy plantations, which is in most cases are harmful to the environment. An example of negative effects of utilizing fertilizers is the excess amount of nutrients in the nearby lakes and rivers. There is also an argument that more energy is utilized than the produced one. [46] In answer to this social economical argument, Jatropha plants in Tanzania need neither fertilizer nor pesticides due to the resistance characteristics and toxicity composition of the plant that make it not easily eaten by animals or insectics. However, it was noted that probably if Jatropha is grown in a commercial basis there might be a need to add some fertilizer when the land is exhausted.[47] This argument also could be overcome by the fact that Jatropha seed residues could be used to fertilize Jatropha plants if needed. The uses of Jatropha as a fertilizer will be presented as part of many uses of Jatropha in the next section of this chapter.

---

[44] Environmental Africa (2003). Jatropha activities. [Online] http://www.jatropha.de/zimbabwe/ea/ea-jcl-activities.htm

[45] Larson, Eric & Williams, Robert. (1995). Biomass Plantation Energy Systems and Sustainable Development, Energy as an Instrument for social Economic Development: UNDP, p. 95

[46] Boesherz IN Nieminen, Mika (2003). Biodiesel an Option for European Transportation: Small-scale biodiesel production from used frying oil, ARPEA I paper IIIEE, Lund University

[47] Openshaw, Keith. (2000). A review of Jatropha curcas: an oil plant of unfulfilled promise, Biomass and Bioenergy 19,p.14

3.4 Jatropha as a plant of many uses

Rural energy problems in developing countries and Tanzania in particular are linked with other rural problems. These problems need an integrated approach to reach solutions. According to Henning the Jatropha plant presents a plausible integrated solution to many rural problems. The Jatropha plant has four main contributions to rural development and poverty eradication in general: Renewable energy, promotion of women, poverty reduction and soil erosion control. To use Henning's exact words, "The Jatropha system creates a positive correlation between energy production and food production. The more energy Jatropha hedges produce, the more food crops are protected from animals and erosion. Also additional income is created, mainly for women".[48]

The Jatropha Curcas has many products and potential contributions to rural community development. The products of the Jatropha plant are the plant itself, fruits, leaves, and latex. The fruits comprise of seeds and fruit hulls. The seeds produce seed oil, seed cake, and seed shells.[49] The oil processes also produce sediments from oil purifications. Jatropha products and uses can be comprehensively presented as follows:

Figure 3-2: The different products of Jatropha plant

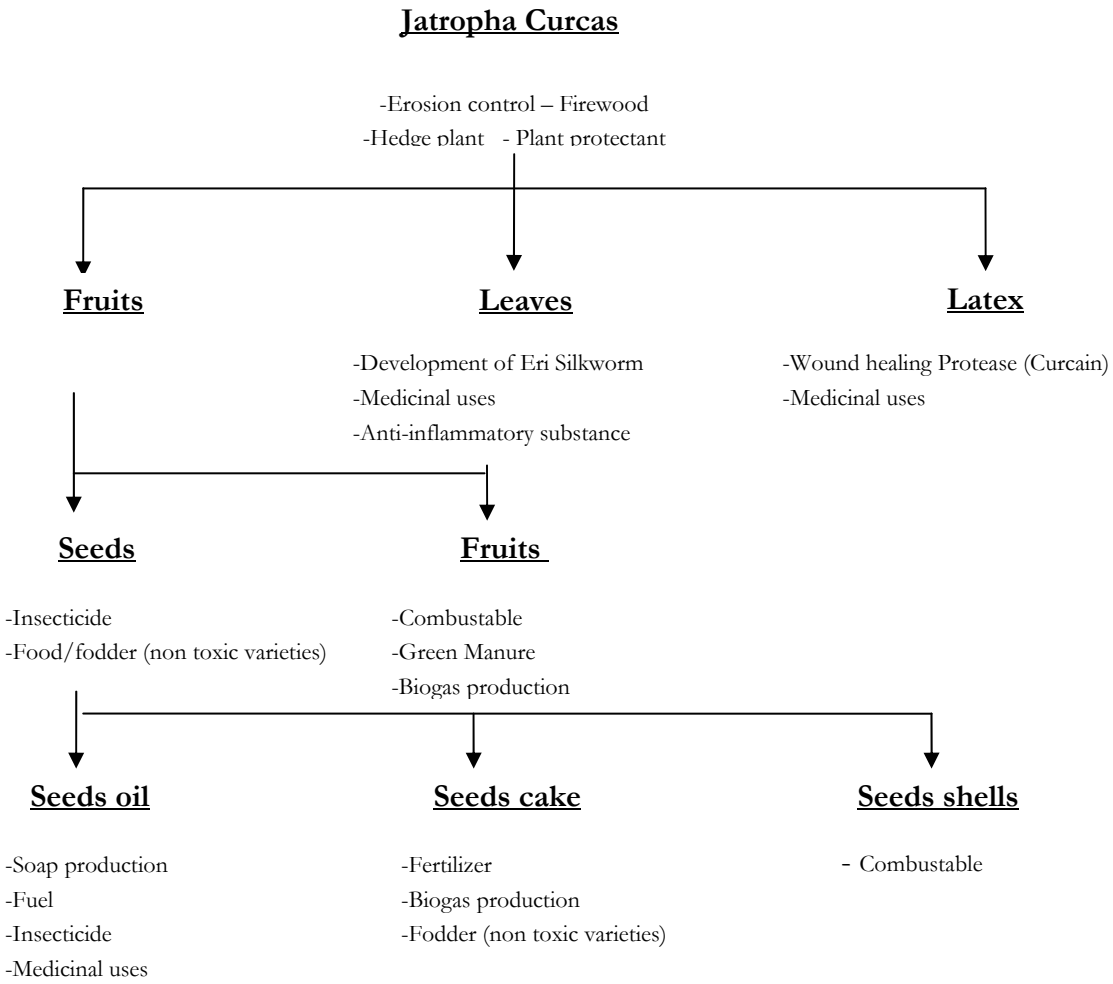

Source: Gubitz (1999):,p. 74

[48] Henning, K.(1998). *Integrated Utilization of Jatropha Plant.* [Online] http://www.jatropha.de Accessed 5/5/2003
[49] Gubitz, (1999).,op.cit.,p.74

The Jatropha plant itself can be used in erosion control if planted across the hills and against the wind. The plant can also be used as firewood. The fact that it grows very fast means Jatropha could help to solve the problems of deforestation in many developing countries. As noted above, Jatropha in many countries is normally grown as a hedge plant. The toxicity of the plant deters animal browsing. [50]

The leaves are used as a medicine and could also be used to develop Eri Silkworm. The leaves could also be used as an anti-inflammatory substance. In many places, the latex is used to heal wounds and as a medicine. The fruits have seeds and also produce fruits hulls. The fruit hulls themselves are combustible and could be used to produce fire in villages. The fruit hulls also could be used as a green manure to add nutrients to the soil for agriculture. The fruit hulls could also be fermented to generate biogas. The Jatropha seeds can produce seed oil, seed cake and seed shells. The seed oil could be used as diesel or paraffin substitute or extender for diesel engines, cooking stoves, lightings and a lubricant. The oil and sediment from oil purifications can be used as base material for soap production. The oil also contains an insecticide, which makes it possible for Jatropha oil to be used for medicinal purposes due to its strong purging effects. The seed cake could be used directly in agricultural activities as fertilizer. The Jatropha seed cake was tested and it was found that the mineral composition in it is the same as that of chicken manure. The seed cake could also be fermented to produce biogas. The seed cake from non-toxic varieties of Jatropha could be used as a fodder. In the case of seed shells from the seeds, they can be combusted directly and produce energy in terms of fire. [51, 52]

The social economical contribution of Jatropha to rural community development emanates from promotion of women. In this case the Jatropha plant improves the working conditions of women. Women in rural areas can use Jatropha oil instead of petroleum products, which tend to be relatively expensive. By using locally produced Jatropha oil as a fuel, the cash outflow to petroleum products from the village is saved. In addition, use of Jatropha plant oil instead of firewood for fuel would improve women's health and save time used to fetch firewood. Another benefit is the traditional use of the plant as a medicine. Generally, medically, the oil is used by many women as an antiseptic for cough, skin diseases, and pain reliever from rheumatism. Rural communities could use Jatropha latex to heal wounds and it also has microbial properties. The plant promotes rural women by providing employment and income-generating activities through soap making using Jatropha oil and sediment from oil purification. The soaps can then find the market within the village or nearby rural areas. In one sentence, the contribution of Jatropha in rural communities is providing employment, facilitating soap production in rural areas, strengthening women's economic independence, reducing women's workload, and helping rural communities particularly rural women to meet their current obligations through Jatropha seed sales.[53]

The Jatropha plant also helps to control soil erosion and improve soil fertility. Jatropha plants facilitate the control of water erosion if it is planted parallel to store dams and could be used as a wind bleak. Since the plant roots grow closer to the ground surface, which forms

---

[50] Gubitz, (1999).ibid.,p.74

[51] Gubitz, (1999).ibid.

[52] Alexander's Gas & Oil Connections (2001).,op. cit

[53] Henning, K. (1998). Integrated Utilization of Jatropha Plant, op.cit

bonds that slow the surface runoff during heavy rains, this helps the penetration of more water into the soil and makes the soil more productive. The example of using Jatropha for soil erosion control is the cotton growing company CMDT in Mali, which uses Jatropha hedges extensively to control soil erosion in their fields.[54] Solsoloy also reported that the Jatropha Curcas could be used to control cotton insect pests.[55]

Furthermore, in the issue of poverty reduction, the Jatropha plant provides a source of income in rural areas through the use of Jatropha oil as fuel and as raw materials for the soap making that earns more income for rural communities. Other sources of income for Jatropha are; Sale of Jatropha seeds and more income from food crops; since the Jatropha hedge protects food crops against animals more production is ensured. The fact that the cash that was used to purchase petroleum products will remain in the village ensures more hard cash to be retained in the village that might help to meet other essential obligations. The Jatropha plant also provides a source of employment to many rural dwellers, which in turn helps to reduce urban migration in developing countries.[56]

3.5 Toxicity of the Jatropha plant

The toxicity of the Jatropha Curcas is an advantage on one hand and disadvantage on the other. The advantage emanates from the fact that the plant could not be browsed by animals and could act as an excellent fence. The disadvantage comes from the fact that the equipment, such as ram presses that are used to press Jatropha seeds, could not be used to press other edible seed oil from plants like sunflower unless a thorough cleaning is done which would take a lot of environmental resources. The toxicity of Jatropha Curcas is proved by the test reported by Liberalino that rats, which ate raw or cooked seed died within 2-3 days, and rats given raw or cooked Jatropha oil died within 6-8 days. When the seeds are roasted or cooked they cause death to rats within 14-16 days.[57] Another test showed that animals fed Jatropha products suffer from abdominal pain, diarrhoea, respiratory problems and imbalance.[58] The main source of the toxicity is the phorbol esters contents of the seeds that could also promote tumours and inflammation. However, it has been observed that it is possible to detoxify the phorbol esters by deacidification and bleaching in order to use the seedcake for animal feed. The deacidification could reduce the phorbol esters up to 55%.[59] The claims that there are some varieties of non-toxic Jatropha plants need more investigation.

3.6 Jatropha oil as renewable fuel for road transport

The history of using Jatropha oil instead of diesel goes back to the Second World War when Madagascar, Cape Verde and Benin used Jatropha oil as a diesel substitute[60]. The recent tests of unmodified and modified Jatropha oil for diesel engines in Mali and Nicaragua make Jatropha oil a potential renewable fuel for road transport as a replacement or an extender of diesel or paraffin fuels. Jatropha oil could also be used as cooking fuel or lighting fuel in rural

---

54 Henning, (1998)., ibid

55 Solsoloy, (1993). Insecticidal action of the formulated product and aqueous extract from physic nut, In. Gubitz, (1999).,op.cit.,p.78

56 Henning, (1998).,idid

57 Liberalino, *et al.* (1988). Seeds: Chemical analysis and toxicity. In Gubitz, (1999).,op.cit.,p.75

58 Gubitz, (1999).,op.cit.,p.75

59 Haas, W. & Mittelbach, M. (2000). Detoxification experiments with the seed oil from Jatropha Curcas L, Industrial crops and products: An international Journal, 12: 111 - 118

60 Foidl, *et al.* (1996).,op.cit,p.79

areas. The focus of this study is for using Jatropha oil as a fuel for road transport. Jatropha oil is a very promising renewable fuel for road transportation due to several advantages: Jatropha oil is a renewable fuel that could last for many years without any problem. Jatropha oil is environmentally friendly fuel and could be produced easily in rural areas. The major disadvantage of Jatropha oil as a fuel for road transport is the high viscosity of Jatropha oil that is due to the large molecular mass and chemical structure of Jatropha oil.[61] Literature [62] shows that the high viscosity causes problems in pumping, combustion and atomisation in injector systems of diesel engines. The literature further notes that in the long term the high viscosity may develop gumming, the formation of injector deposits, and ring sticking. Therefore, the reduction of viscosity in order for Jatropha oil to be used for road transport is paramount. The important physical and chemical comparisons of Jatropha oil and diesel can be shown in the table below:

Table 3-1: Physical and chemical properties of Diesel and Jatropha Curcas oil

PROPERTIES	DIESEL	JATROPHA CURCAS OIL
Density (gm/cc), 30°C	0.836 – 0.850	0.93292
Kinematic viscosity (cSt)	4 – 8	52.76
Cetane No	40 –55	38.00
Flash point, ^{o}C	45 – 46	210.00
Calorific value, MJ/kg	42 – 46	38.20
Saponigication value	-	198.00
Iodine No.	-	94.00

Source: Pramanik, K. (2003:241)

The greatest difference to be considered in using Jatropha oil as fuel for road transport is the amount of viscosity, which could contribute to carbon deposit in the engines and the above-mentioned issues. The high viscosity could also cause incomplete fuel combustion and may result in reducing the life of an engine [63] and have environmental drawbacks such as producing carcinogenic particles. However, the high cetane number and calorific value that is approximately equal to diesel fuel make it possible to use Jatropha oil in diesel engines. Additionally, the high flash point of Jatropha oil makes it safer to store, use and handle than

[61] Pramanik, K. (2003). Properties and Use of Jatropha curcas oil and diesel blends in compression ignition engine. *Renewable Energy* 28:,p. 240

[62] Ryan T.W. *et. al.* (1984). The effects of vegetable oil properties on injection and combustion in two different diesel engines, & Pryde, E.H. Vegetable oil as diesel fuels: Overview. In. Pramanik, K. (2003). Properties and Use of Jatropha curcas oil and diesel blends in compression ignition engine. *Renewable Energy* 28: 239-248

[63] Pramanik, K. (2003).,op.cit.,p.241

petroleum diesel; 210°C is the temperature at which it will ignite when exposed to a flame while diesel is only 45 – 55 oC. [64]

Due to the difference in viscosity and other differences noted in the table above there are two strategies for using Jatropha oil as fuel for road transport. The first one is changing the engine to adapt to the fuel and the second one is for processing the fuel to adapt to the engine. The literature indicates that developing special engines like the Elsbett engine or modifying existing diesel engines to preheat Jatropha oil first to reduce viscosity and filter the fuel could achieve the first strategy. The modification of engines or manufacturing engines to run on straight Jatropha oil requires the addition of new injector, glow plugs, filter and heat exchanger to the old diesel engine design.[65] The second option is to adapt Jatropha oil to the engines. This option seems to be more practical. [66] The adaptation of Jatropha oil to the diesel engine could be done by blending the Jatropha oil with diesel, producing methyl esters or ethyl esters through transesterification process that could be used straight instead of diesel or dual fuelling with diesel.

3.6.1 The blending of Jatropha oil with diesel

Blending, which is most probably the cheapest method and could be adopted easily in the developing countries like Tanzania without major investment in transesterification technologies, could be done by diluting Jatropha oil with diesel in the ratio of 30:70 or 40:60 up to 50:50 (Jatropha/Diesel). The literature showed that viscosity value of 50/50 J/D, 40/60 J/D and 30/70 J/D are closer to diesel at a range of 55-60°C, 45°C and 35-40°C respectively. Therefore it was established that from 1% – 50% of Jatropha oil could be substituted for diesel in the diesel engine without any major operational difficulties. However, during the test the fuel consumption was found to increase with the higher proportion of Jatropha oil in the blend. Another observation was the drop of thermal efficiency when the proportion of Jatropha oil increases. The literature argued that the thermal efficiency drop is probably due to the poor combustion characteristics of Jatropha oil because of its high viscosity and poor volatility.[67] Therefore, the most important thing to consider when blending is to keep the ratio as low as possible and always below 50% for the Jatropha oil.

3.6.2 Transesterification process

The second method for adapting Jatropha oil to the diesel engine is producing methyl esters through transesterification. In the transesterification process ethyl esters could also be produced from Jatropha oil. The ethanol used to produce ethyl ester biodiesel through the transesterification process has the ecological advantage of being 100% renewable, as opposed to the methanol that is used to produce methyl esters. However,, it was noted that from the standpoint of engine performance both methyl ester biodiesel and ethyl ester biodiesel are well suited as petroleum diesel substitutes. Nevertheless, for large scale production methyl esters are preferred;[68] thus the focus on methyl ester production in this section.

---

[64] Kumar M.S. *et.al.* (2003).An experimental comparison of methods to use methanol and Jatropha oil in a compression ignition engine. *Biomasss and Bioenergy,* 25:,p.309

[65] http://journeytoforever.org/biodiesel_svo.html

[66] Foidl, *et al.* (1996).,op.cit,p.77

[67] Pramanik, K. (2003).,op.cit.,p.243 & 244

[68] Foidl, *et al.* (1996).,op.cit,p.80

In general the transesterification of Jatropha oil indicated improvements in terms of performance and emissions reductions. The transesterification provides a significant reduction of viscosity and improves the cetane number of the Jatropha oil.[69]

As noted above, the processes of transesterification to produce methyl ester require the use of methanol to convert Jatropha oil into methyl ester. The preparation of methyl esters from Jatropha involves mixing raw Jatropha oil with methanolic KOH or NaOH solution and the reaction stirring for approximately half an hour before transferring to separation funnel. In the separation process the glycerol layer is separated from ester layer. The Glycerin layer will produce by product glycerin and Ester layer is washed with warm water to remove traces of soap and glycerol and dried over Na_2SO_4 to obtain pure methyl esters.[70] The following diagram illustrates the transesterification process:

Figure 3-3: Biodiesel transesterification process flowsheet

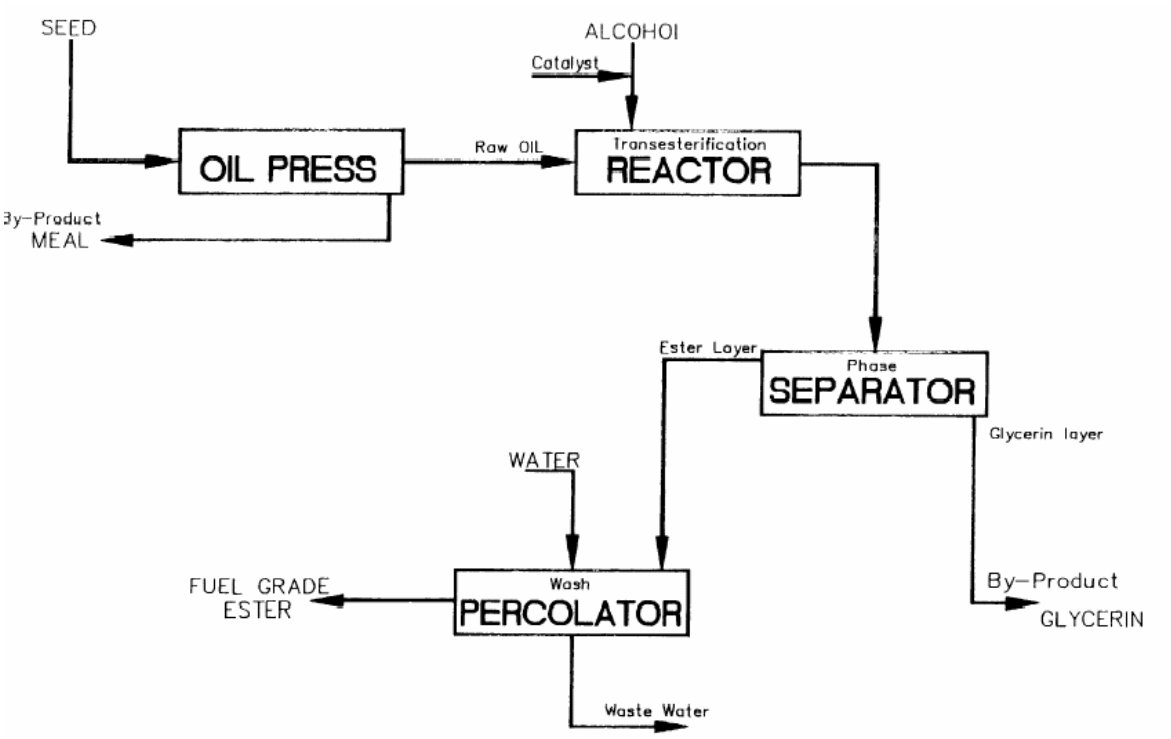

Source: Korus, A.R. *et al.*

In summary, the methyl esters fuel has high quality and can be used directly in the existing diesel engines without modifications.[71]

---

[69] Kumar, M.S. *et al.* (2003)., op.cit, p.311
[70] Foidl, *et al.* (1996).,op.cit,p.78
[71] ibid

3.6.3 Dual fuelling

Dual fuelling is the approach in which different types of fuels are used in diesel engines. The literature shows that a conventional diesel engine could be easily modified to operate in dual fuelling mode. In the dual fuelling process the volatile fuel with high cetane number is inducted along with air through the intake manifold and is ignited by injecting a small quantity of diesel, called the pilot fuel. Alcohols could be used as an inducted fuel in dual fuel operations. Since Jatropha oil produces high smoke emissions, dual fuel operation can be a viable option for improving their performance. Jatropha oil can be used as the pilot fuel and alcohol can be used as inducted fuel. The high flame velocity of alcohols will also improve the overall combustion process. [72]

The literature showed that Jatropha oil used alone leads to a slight reduction of thermal efficiency as compared to diesel. The methyl ester of Jatropha oil has brake thermal efficiency comparable to diesel values. The maximum brake thermal efficiency is 27.4%, 29% and 30.2% with Jatropha oil, Jatropha oil methyl ester and diesel respectively. At maximum output the HC emission is higher with Jatropha oil as compared to diesel. It is 130 ppm for Jatropha and 100 ppm for diesel. However, it is only 110 ppm with Jatropha oil methyl ester. The same trend was also observed for the CO emission. The maximum smoke level is 4.4BSU for Jatropha oil, 4BSU for its ester and 3.8 for diesel. Ignition delay and combustion duration are higher in Jatropha oil and methyl ester than in the diesel. During the premixed combustion phase low heat release rates were found with Jatropha oil and methyl ester as compared to diesel.[73]

In conclusion, since Jatropha oil has inferior brake thermal efficiency and high level of smoke, HC and CO emissions and high viscosity that could lead to gum formation and piston sticking that might shorten the life span of the engine, it is important to blend, preheat, modify or dual fuel to improve the Jatropha oil performance. Jatropha oil can be processed through transesterification process by methanol to obtain methyl ester. The Jatropha oil methyl ester is more efficient, exhaust gas temperature is reduced, HC and CO emissions are reduced and smoke level is reduced. In the dual fuel operation of methanol induction and Jatropha oil as pilot there is an increase in brake thermal efficiency, reduction of smoke, reduced NO and increased HC and CO emissions. Therefore, methyl ester of Jatropha oil and dual fuelling operations are better than the blend.

3.7 The economic viability of Jatropha for energy services

Due to the lack of empirical data for calculating the economic viability of Jatropha oil for energy service in Tanzania the study reviewed studies that explored the economic analysis of Jatropha oil for energy services in other places where Jatropha activities are taking place. It is assumed that the results of the economic analysis also represent many developing countries' situation including Tanzania's situation. From the literature review it is apparent that the economic viability of Jatropha fuel is dependent on the technology used for processing and the capital cost of required equipment. There are conflicting arguments about the economic viability of using Jatropha oil as a fuel for energy services particularly the use of Jatropha oil for road transport. The economic analysis of Jatropha system in Mali considered only the production of Jatropha raw oil, involving three different press technologies. The first case considered the Bielenberg press with a capacity of 10t of seed per year and an investment

---

[72] Kumar, M.S. *et al.* (2003)., op.cit, p.318

[73] ibid.,p. 318

cost of$100 for the production of the press. The second technology was a Sundhara/Lister oil expeller with the investment cost of $1000 for the plant oil engine. The third case technology was Sundhara/Hatz press with an investment of about $4500. [74]

The Bielenberg press, which is a hand operated press, showed an internal rate of return (IRR)[75] of 75% and a payback period of less than two years. In the second case the Sundhara/Lister expeller that is driven by Lister type engine showed an IRR of 49%. The study went further and calculated the sensitivity of IRR in the second case. This study showed that the IRR is unsensitive to the investment costs. A 20% increase drops the IRR only by 10% and vice versa. The sensitivity analysis showed that the operating costs have the highest influence. If you lower the variable cost by 20% the IRR increases by about 35%. This result indicates that the profitability is very sensitive to the operating costs and the purchase of seed showed the highest importance. The final price of the Jatropha products has a significant role in measuring the success of the commercial unit. Increased revenues by 20% doubles the IRR, on the other hand it was found that the decreased revenues for about 20% leads to an IRR of about 0%. This means that the Jatropha products are very sensitive to the market conditions of the final products. The study also revealed that the Sundhara/Lister expeller break-even at 21% percent that is equal to 18 tons of seed per year.[76]

In the third case, using Sundhara/Hatz, the IRR went down to 26%. The break-even analysis indicated the break-even point at 26% of full operating capacity. This is approximately equal to 22 tons of seed per year. The IRR drop emanated from the fact that the Hatz engine is almost 5 times more expensive than Lister machine. The study also showed indirect effects of Jatropha such as agro-ecological effects of Jatropha hedge protection against erosion and the increased fertility by improved fallow. Another indirect effect is the protection effect of the hedges against divagating cattle. Another effect is the improved harvest due to the use of press cake as organic fertilizer. Furthermore, the lowering of social conflicts by using Jatropha as a hedge to delimit field borders is another indirect effect of Jatropha, as is the income created by collecting and selling the seeds to the press operator. Moreover, another effect is the substitution value of the oil as a domestic fuel and the negative effect of the hedges due to its surface need. With the consideration of these indirect effects the economic rate of return (ERR) is 135%. At the regional level in Mali including 20 to 30 villages, a further effect was employment for 1000 women created for harvesting, drying and dehulling the seed which gives them the equivalent of a monthly rural income. Their work included producing soap and commercialising the Jatropha products (oil, soap, oil cake, other by products). With all the indirect effects the meso-economic rate of return (MERR) is calculated at 351%.[77] The table below summaries the economic analysis above: (For basic data used for economic analysis see appendix II)

---

[74] Henning, K.R. (????). Economic Analysis of the Jatropha System in Mali. *A short version of a study by Hans-Jurgen wiemer.* Available at http://www.jatropha.org

[75] IRR is a capital budgeting tool which is used to determine the economic viability of projects

[76] ibid

[77] ibid

Table 3-2: Comparison of cost, capacity and IRR of Jatropha oil production using different oil presses

	Bielenberg	Sundra/Lister	Sundra/Harz
Investment Costs	$ 100	$ 1 000	$ 4 500
Capacity	20 t of seeds per year	84t of seeds per year	84 t of seeds per year
IRR	75%	49%	26%

In all the cases above the investment to Jatropha is viable since the IRR is greater than zero and the highest IRR means that the Bielenberg case is more viable than the others. If the case could have scored less than zero in its IRR then the investment is not viable.

Another study showed that the economic evaluation of the Biodiesel production from Jatropha plant is very profitable provided that the by products of the Biodiesel production can be sold as valuable products.[78] In this study Foidl and Eder did not show any figures. However, it is assumed that Foidl is one of the authorities in the field of using Jatropha for energy services due the remarkable contribution in the field of Jatropha system such as the article titled 'Jatropha Curcas L. as a source for the production of biofuel in Nicaragua. Bio resource. Technology. 58: 77 – 82' that was also reviewed by this study.

Contrary to the above economic analysis whereby the results showed that Jatropha oil is a viable option for energy services such as cooking, lighting and the use of Jatropha oil for road transport as a substitute for diesel, Openshaw indicated that too much emphasis is put on the energy component of the plant. He argued that since Jatropha oil is about three times more expensive than hydrocarbon fuel, the production of Jatropha oil as a substitute for petroleum products is not viable. He further noted that in many developing countries diesel fuel and kerosene have little tax and are sometimes subsidized, which would lead to a situation where Jatropha could not compete with these petroleum products. Openshaw sees Jatropha oil as only viable for use in soap making. He said in many developing countries the oil would be sold at a loss if it has to compete with diesel and kerosene.[79]

However, Openshaw's conclusion that Jatropha oil is three times more expensive than hydrocarbon fuel may or may not be true depending on the supply of the Jatropha oil, tax system for the petroleum diesel, production cost for both products etc. Most likely with the increased production of Jatropha oil, for instance, the selling price of the oil will be lower due to the high supply and economies of scale.

The weakest part of Openshaw's article is the fact that the non-financial benefits of Jatropha oil are not included in his analysis. The benefits of Jatropha as a hedge for protecting food crop against animals, medicinal value of the Jatropha, fertilizer from seed cake, carbon sink of Jatropha plant etc that was included in the previous economic analysis of Jatropha in Mali

---

[78] Foidl, N. & Eder, P. (1997). Agro-Industrial exploitation of J. Curcas. In: Gubitz, G.M., M. Mittelbach., & M. Trabi. (1999). Exploitation of the tropical oil seed plant Jatropha curcas L. *Bioresource Technology,* 67:,p.80

[79] Openshaw, K. (2000). A review of Jatropha curcas: an oil plant of unfulfilled promise, Biomass & Bioenergy, 19:,p.9

do not appear in Openshaw's article. Another point that may be raised is the fact that in developing countries, for example in Tanzania, the prices of diesel and kerosene differ from place to place. Furthermore, there are some remote places where roads do not reach and people do not get even the highly priced petroleum product. They close everything when the sun goes down. For these people, Jatropha oil could be a life revolution by adding income in the household and supporting evening activities such as night self-studies for students in these areas. The planting of fast growing Jatropha could also help to reduce the rate of deforestation caused by firewood searching in Tanzania that is estimated to be 91,276 ha/year.[80] The amount of hectares deforested per year and the fact that the main cause of deforestation in Tanzania is use of firewood also contradict Openshaw's argument that deforestation is caused by cleaning farms due to the increase of population. Generally, the fact that the fuel is produced locally and could be consumed locally provides a convenient solution for energy services in countries like Tanzania.

3.8 Jatropha oil extraction technology options in Tanzania

Traditionally women used stones to extract Jatropha oil from seeds, and probably in some rural remote areas they still do. The following picture illustrates the traditional method of Jatropha oil extraction:

Figure 3-4: The traditional way of extracting oil from Jatropha seeds

Source: http://www.Jatropha.de

The traditional way illustrated above was mainly extraction of Jatropha oil for medicinal purposes, which most likely needed very small amounts of Jatropha oil. The traditional method seems to be inefficient and not suitable for large-scale production of Jatropha oil. The large amount of seeds required leads to application of efficient technologies such as manual ram presses and expellers.

The recent technological trends for extracting oil from Jatropha seeds in developing countries and Tanzania in particular are manual ram presses and expellers. Both manual oil presses and expellers are manufactured in Tanzania. KAKUTE Ltd. is among the companies that are manufacturing these manually operated ram presses. The manual presses can also be imported from other nearby African countries. For example, the ram presses that are manufactured by the Kenyan non-profit organization Approtec are sold at very reasonable

[80] Mwihava, N.C.X. (2003). Brief paper on status of renewable energy development in Tanzania. Ministry of Energy and Minerals: Dar Es Salaam.,p..2

prices. This Kenyan non-profit organization has been spreading the locally appropriate technologies for pressing plant seeds to local users for many years. The following prototype illustrates the manually operated oil seed press from Kenya, which is used widely in Tanzania due to the fact that Approtec has a country representative in the Tanzanian market.

Figure 3-5: The prototype of the manually operated oil seed press

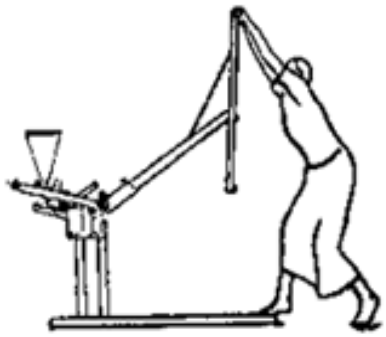

Source: http://www.jatropha.org

The bucket filter in the press uses gravity to slot down seeds. The real life example of pressing the Jatropha seeds using manually operated hand pressing expellers from Kenya can be shown in the following picture:

Figure 3-6: The real life example of manually operated oil seed press from APPROTEC Kenya

Source: http://www.jatropha.org

These manual ram presses are very simple and can be used to press small-scale production of different types of seeds such as sunflower, sesame, Moringa seeds and Jatropha seeds at village level. The price of the whole package of oilseed manually operated presses from Kenya is $350. The capacity of the ram is to produce an average of 8 Kg of oil per 8 hour working day.

The literature shows that the payback period for the village with production of Jatropha seed of 15 tons annually is only 2 months. Even when the calculation was made using Tanzanian manufactured ram press the payback period was less than two years. However, the literature also showed that the differences of the ram presses manufactured by Tanzanian companies

and the ones manufactured by organization from other countries but sold in Tanzania need further research.[81] In a nutshell, since the inception in the mid-80s, KAKUTE sold only 2000 Ram presses while for the period of 1999 – 2001, Approtec with the Kenyan model Ram presses sold about 1000 Ram presses. The scenario suggests that probably the Kenyan models are superior to that of Tanzania. The low price of the Kenyan model might also explain why more people prefer Kenyan technology. The newness of the technology might be one of the motivating factors for a good sale in a short period of time for the Kenyan model. On the other hand the high price of the Tanzanian ram press might communicate the quality of the Ram presses. The interesting thing is the fact that all the technologies pay back within a reasonable period of time and are economically feasible due to their life span and payback period. The important thing is for users to get enough information on the differences and the availability of the technologies in order to make informed decisions.

The expelling service could also be found in Tanzania. The trust known as Vyahumu trust under the direction of Evangelical Lutheran Church of Tanzania in collaboration with a German organization, FAKT, manufacture the expellers in Tanzania. The Vyahumu expellers are sold in many places in Tanzania due to the fact that they can be used to process many types of oil seeds. The following illustration indicates Jatropha seeds expelling services using Vyahumu expellers made in Tanzania.

Figure 3-7: An example of Jatropha seeds expelling service using Vyahumu trust expellers in Tanzania

Source: http://www.jatropha.org

However, if the matter at hand is to exploit the Jatropha oil at a reasonable level and optimise the outputs of oil from seeds there is a need to undertake a further research in order to determine the technology that will provide optimal output. Furthermore, in the choice of technology it is important to consider advanced engine driven oil pressers and explore the opportunities for using them in developing countries with little electricity connection coverage like Tanzania.

[81] Chachage, B. (2003). Jatropha as a Source of Renewable fuel for Energy Services in Developing Countries: ARPEA II, IIIEE, Lund University

3.9 Jatropha technology transfer issues

Most of the time it is regarded that access to technology is an essential contribution to the many kinds of development in developing countries. Technologies could be imported and diffused on a wide scale or developed locally and transferred within the country.[82] Basically, the technology that is needed in order for Jatropha oil to be used for road transport is oil extraction technologies and oil processing technologies mainly transesterification technology. The manual oil press technologies and expellers exist in Tanzania and in the nearby country of Kenya. The technology transfer issues here are related to the spread of the manually operated presses to a wider rural community within Tanzania. Since the engine driven presses cannot be used in most of rural areas in Tanzania due to the fact that many villages do not have electricity, probably the best model is for these machine engines to use Jatropha oil to run. Furthermore, the transesterification technology is currently lagging behind in Tanzania. In this case it is important to transfer transesterification technology from other countries to Tanzania and locally produced technologies to a wider rural community where plant oil technology is widely spread.

One scholar identified two widely used models for technology transfers for developing countries, namely, commercial channels and non-commercial. In the case of commercial channels, one could use Foreign Direct Investment (FDI), joint venture, licensing agreements, international sub-contraction or turnkey contracts. In the case of FDI the supplier of the technology retains the ownership, marketing skills and capital from home countries to the host. In joint venture, where two or more parties come together and agree to share the provision of equity capita, the investment risk, the control and decision-making authority, and the profit and other benefit of the operations, the major advantage is the balance between the interests of technological adapter, developer and the potential user of the technology. In the case of licensing agreement the property rights are authorized during a specific period of time only. In the case of international subcontracting there is a possibility of technology transfer when the local firm is subcontracted by a foreign firm with machines, knowledge and equipments. In turnkey contracts, the foreign contractor takes responsibility for all activities. The greatest advantage of this type of technology transfer is it gives access to all supportive resources of the foreign firm. The non-commercial model of technology transfer uses channels of information distribution such as fairs, conferences, books, journals, films, other publications and official organizations such as universities to diffuse and transfer technologies.[83] Probably there is not a single best model for technology diffusion and transfer. Depending on the situation and the case in question, Tanzania could adapt any of the above models of technology diffusion and transfer for using Jatropha oil as a renewable fuel for road transportation.

Other scholars identify the barriers to technology transfer. For example, it was noted that the key issues for technology diffusion and transfer are: 1) Demand must exist, with clear financial incentive and understanding of the cost and benefits. 2) Credit must be available. 3) Reliability must not be a question 4) Local manufacturers must be reasonably certain of the market and the opportunity for profit. 5) Manufacturer must have access to technology. Through either of the model above 6) some type of marketing and distribution system must exist. It was further noted that the barriers to the technology transfer are lack of information

---

[82] Thomas, A.U. (1996). Models of Renewable Energy Technology Transfer to Countries. *WREC*, Banjul, Gambia, p.1104

[83] ibid, p. 1106

about renewable energy costs, benefits, geographic resources and opportunities and lack of demonstration experience of technologies.[84]

3.10 Summary

The literature review presented a description of the Jatropha plant and the ways of cultivating it. The different uses of Jatropha were also presented in this chapter. Next the toxicity issues of Jatropha plant were presented. The focus of the study of using Jatropha as renewable fuel for road transport was covered extensively in this chapter. Blending, transesterification and dual fuelling were the strategies reviewed for using Jatropha oil as a renewable fuel for road transport. Furthermore, the economic viability of Jatropha for energy was also reviewed and Jatropha oil extraction technologies were presented. Finally, technology transfer issues were reviewed in this chapter.

[84] Martinot, E. (1999). Renewable energy in Russia: markets, development and technology transfer, Renewable and Sustainable Energy Reviews, pp. 59 & 62

4. Findings and Discussion

4.1 Tanzania energy policy and status of renewable energies

In order to fulfill the general purpose of the study of assessing the policies and institutional issues in respect of deploying and transferring Jatropha technology as a renewable fuel for road transport in Tanzania, the national energy policy and status of renewable energies in Tanzania are reviewed and discussed in this section. The main purpose of this section is to reveal where Jatropha oil as renewable fuel for road transport fits in the national energy policy and its institutional frameworks.

The first energy policy in Tanzania was formulated in April 1992. Due to market liberalization and encouragement of private sector initiatives the policy document was revised and the final draft released in the year 2002. The key issues in the objectives for energy sector development are to provide input in the development process by establishing efficient energy production, procurement, transportation, distribution, and end user systems in an environmentally sound manner, balancing the national interest and commercial interests, and the enhancement of the development and utilization of indigenous and renewable energy sources and technologies to mention but a few.[85]

The policy document provided the energy situation in Tanzania and revealed that for the last decade the energy demand in the country has increased due to the general population increase and the increase in economic activities. The country relies on imported petroleum products and a very large amount of foreign currencies are used to finance petroleum products imports. The estimated total energy consumption is more than 22 million tones of oil equivalent (TOE) or 0.7 TOE per capita. The revised policy document further noted that rural areas energy consumption accounts for 85% of total national energy consumption and around 80% of the population in rural areas has very low purchasing power. The energy balance in Tanzania is dominated by biomass fuel (charcoal and firewood). The biomass based fuel account for more than 90% of the primary energy supply. Petroleum products account for 8%, electricity accounts for about 1.2% and coal, solar and wind account for less than 1% of energy used. It was noted that Tanzania has a forested area of about 35.5 million hectares and the deforestation rate is 91,276 ha/year. The policy also mentioned the untapped potential energy sources such as natural gas, uranium, solar, wind and geothermal energy. So far the policy proved that the dissemination of renewable energies are limited to improved charcoal production techniques, biogas and windmills and very little photovoltaic.[86]

The mention of these renewable energies without the inclusion of plant oils or specifically Jatropha oil as one of the renewable energy sources reveals a gap in the national energy policy that needs to be addressed in order to fully exploit the potentials of plant oils such as Jatropha oil. Jatropha activities have been existing in Tanzania for many years and demonstrations of its use for household cooking and lighting have been going on for quite some time as presented in the case studies and many women in the Jatropha groups have increasingly been using Jatropha oil for lighting, soap making and cooking but there is an information gap between policy makers, producers and users. Additionally, it seems the

---

[85] Ministry of Energy and Minerals. (2002*). The national Energy Policy*, The United Republic of Tanzania government publication, p. 5

[86] ibid, p. 6

information gap exists even within the energy ministry, since all the documents reviewed from D1 Oil Tanzania Ltd were copied to the Minister for Energy. The renewable energy section in the ministry has no information on the existence of Jatropha oil as a potential source of renewable energies for road transport in Tanzania. As part of the solution to the problem of low purchasing power, rural communities could produce, use and sell oil from the Jatropha plant and increase their purchasing power through savings.

The vision of the energy sector is to effectively contribute to the growth of the national economy and thereby improve the standard of living for the entire nation in a sustainable and environmentally sound manner. The mission is to create conditions for the provision of safe, reliable, efficient, cost-effective and environmentally appropriate energy services to all sectors on a sustainable basis. The policy also stated that energy development in Tanzania needs to contribute to the three bottom line frameworks for sustainable energy provision.[87]

The Jatropha activities in the context of the three frameworks above are as follows; The Jatropha activities contribute to the raising of income for the rural dwellers particularly women. In this case the Jatropha activities are clearly placing themselves in the economic framework of the national energy policy. The fact that Jatropha oil is an alternatives for fossil petroleum fuels and the fact that Jatropha oil is potentially carbon neutral fuel places Jatropha oil in the environmental framework in the national energy policy, which emphases the sustainable, secure and equitable use of resources to meet the basic needs of present and future generation while preventing land, water and air degradation. The position of Jatropha activities in the social framework is the fact that Jatropha provides opportunities for everybody particularly in rural areas to produce fuel and encourages community involvement and unity for their development.

The national energy policy also states that the ministry responsible for energy supervises the implementation of the energy policy and is supposed to mobilize resources into areas where market forces fail to ensure adequate energy services. The policy hints that the roles and relations of different players for energy sector need to be but are not yet determined by legislation. An independent regulatory regime for the energy sector does not exist in Tanzania. [88] Furthermore, the researcher noted that energy sources like Jatropha which cross different ministries' regimes, that is, a role from the ministry related to energy and the ministry related to agriculture, have not been taken into serious consideration in the policy and national priorities.

In the strategy for energy sector development, the national energy policy argues to apply market economy in order to have fair and equitable competition while making a provision to use fiscal (taxes, duties, levies) and non fiscal (fees, subsidies, concessional credits, guarantees) measures to protect national interests.[89] It appears that this provision could allow the government to provide incentives for producers and users of renewable fuels. Therefore, the provision could be used to provide incentive for producers and users of Jatropha oil as renewable fuel for road transport. The fiscal policy measures such as the introduction of sulfur tax or carbon tax could be used as a disincentive for users of petroleum diesel.

---

[87] ibid, p. 7

[88] ibid, p. 9

[89] ibid, p. 11

Furthermore, fiscal and non-fiscal policy measures such as subsidies for producers of Jatropha oil and information dissemination could be used to promote the development of Jatropha oil as a viable substitute for petroleum products.

Among the important aspects in the national energy policy that would have direct relation with use of Jatropha oil as renewable fuel for road transport is the policy statement that the energy sector promotes fuel switch from petroleum to other alternative, environmentally friendly fuels. However, while it mentioned other sources of alternative energy the policy did not mention plant oil such as Jatropha oil as one of the alternative source for petroleum fuel in Tanzania. Another aspect is the policy's intention of empowering women while reducing women's workload and encouraging women's involvement in energy development and decision-making. This is one of the strong points of Jatropha activities. Further the policy document put emphasis on the use of appropriate technologies that have reasonable prices and are accessible to a large community.[90] Since the appropriate technologies can be acquired from anywhere, within Tanzania or abroad, the policy in this case could be used to justify arguments for transferring appropriate Jatropha technology in Tanzania. The acknowledgement of the absence of legislation and laws by the national policy also gives room for knowledge inputs from researchers and other different knowledge sources for improving the policy and its legal implementations.

This study also reviewed the Ministry of Energy document: Renewable Energy Status for Tanzania. The document shows the past and present renewable energies' development in the country. The following are listed renewable energies: Improved charcoal stoves, improved wood fuel stoves, improved charcoal production, biomass waste stove, biomass energy for large scale projects, biogas technology, solar energy, wind energy, micro/mini hydro, geothermal, animal power and other biomass technologies such as gasification, briquetting, carbonization of coconut shell and husks and bioelectrification. The document mentioned that the main focus is on wind, solar, micro/mini hydro and biomass. The document revealed the main reason for selecting the area of focus was that these energy sources could be disseminated in the short term. The document also indicated very briefly in the section of biomass that vegetable oils could be used as a direct substitute for diesel oil without indicating any potential candidates for vegetable oil as a renewable fuel.[91] The lack of indication of Jatropha plant as a source of renewable fuel despite the fact that many African countries are involved with Jatropha activities may be because ARI Monduli project, which was then the only formal group dealing with Jatropha activities for energy services and soap making did not want to share information with the ministry for various unknown reasons or may be the renewable energy section in the ministry of energy and minerals does not have a system for collecting information on the existing renewable energy sources in the country from different stakeholders.

4.2 The case of ARI Monduli project

The Jatropha plant is widespread in all regions in Tanzania. However, the plant is noticeably concentrated in the regions of Arusha, Kilimanjaro, Singida, Dodoma, Tabora, Shinyanga, Mwanza, and Bukoba. The idea to start formal Jatropha exploitation activities in Tanzania started in the year 1996 by an informal group of development workers in the Arusha region.

---

[90] ibid, p. 13

[91] Mwihava, N.C.X. (2002). *Brief paper on status of renewable energy development in Tanzania*. The united Republic of Tanzania: Ministry of Energy and Minerals

After securing a fund from The McKnight Foundation African grant program in the year 2000 the Arusha group formulated a four year, two phase project called ARI MONDULI. The main objective of the project was to stimulate the maximum exploitation of Jatropha products. In order to manage the project properly the project is executed by the coalition of the HPI, GEF, KAKUTE LtD and FAIDA SEP. These four organizations signed a memorandum of understanding that HPI manages the fund, KAKUTE Ltd distributes technology and participates in the fieldwork together with GEF, and FAIDA deals with training and marketing issues for Jatropha products in rural areas. The pilot phase, which lasted for one year, started in June 2000. The main work of this phase was to research on the exploitation of Jatropha for various uses. Among the final outcomes of the first phase of the project was the following business flow chart model.[92]

Figure 4-1: The business flow chart for ARI MONDULI project

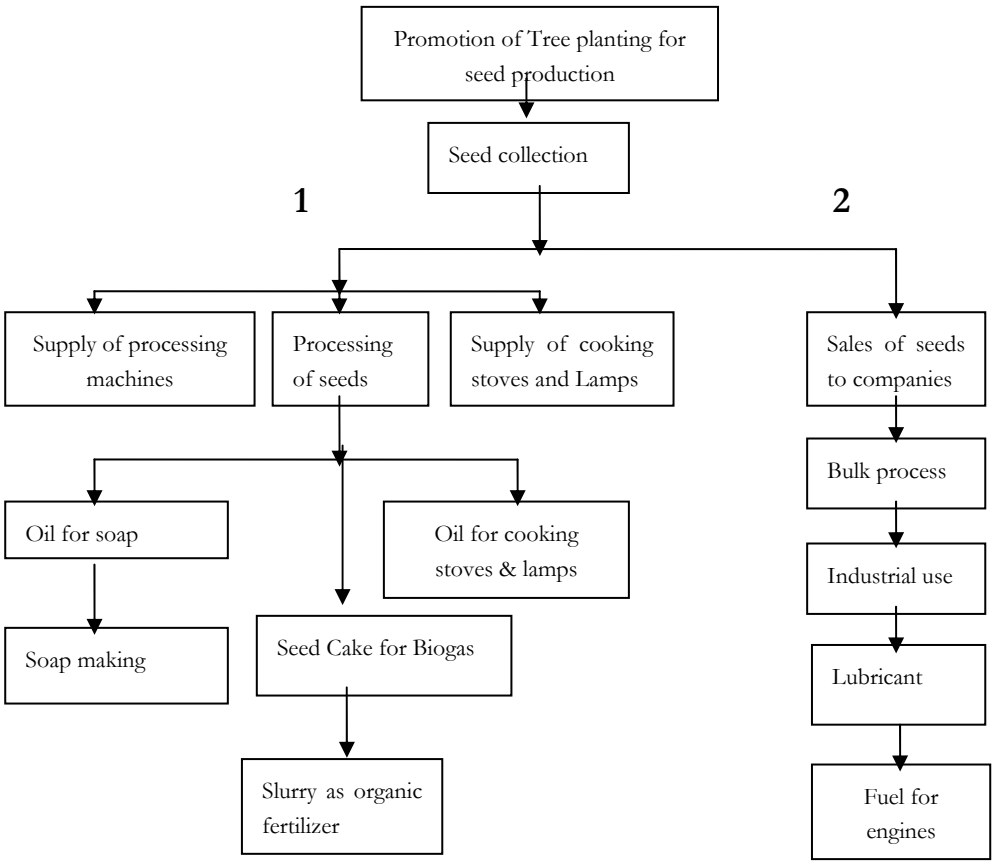

Source: ARI MONDULI project paper [93]

Phase two of the project, which is three years long, aimed at introducing economic activities related to Jatropha in order to increase the exploitation of Jatropha and create a source of income to rural dwellers, particularly women, in the northern regions of Tanzania. Under the project it is estimated that there is about 195 hectares and 52 kilometres of Jatropha hedges available along riverbanks and villages where the project is operating. The well-established

[92] Interview with Livanus Manyanga the ARI MONDULI project coordinator
[93] Mr. Manyanga only showed me the paper with this flow chart and explained the concept during the interview

Jatropha plantations under the project are in Engaruka area in Monduli district where one village harvested 15 tonnes of Jatropha seeds in 2002.[94]

The project mobilized 20 women's groups of 15 members each and 5 primary schools in oil seed production and marketing. The project also organized three women's groups to concentrate on small scale oil processing and soap making and one commercial company to buy Jatropha seeds. The project collects seeds and processes the oil and seed cake. The project established Jatropha nurseries, prepares cuttings and seeds and distributes them to women's groups. For example in the year 2002, out of 20,981 new Jatropha plants, 12,329 were raised by the project and women's groups in Monduli district raised 8,652. During the period of one year 7,747 kg of seeds were collected from the field through women's groups. The project pressed 1015 kg of seeds using manual ram press and 2152 kg seed pressed into oil by power screw expeller. In this period also 157 lamps for using Jatropha oil were manufactured and 77 lamps sold. 15 cooking stoves were manufactured and only 2 sold. The project participated in the recent 2002 Tanzania Northern Zone Agriculture Show and won the first prize in the product design and poverty alleviation category. So far the project has already formally trained 665 people on exploitation of Jatropha products and through demonstrations and exhibitions 7600 people were introduced to Jatropha products in Tanzania. The proposed next step for the project is for developing or securing energy related technology in order to process the oil to be used instead of diesel.[95]

4.2.1 Results on technology issues

From the STEP framework (See appendix III for the STEP framework) that guided this study, questions were asked to explore the project's awareness of the technologies for using Jatropha oil as renewable fuel for road transport and if there are any limiting factors for effective diffusion of the technology. (For the interview questions see appendix IV).

The interview revealed that ARI Monduli Jatropha project has technology to extract oil from Jatropha seeds. The technology available is the manual ram presses that are made by KAKUTE, Ltd. This technology is developed domestically. One of the technology advantages are the fact that people who developed the technology are initiators of the project to exploit the products of Jatropha. This probably means the technology was developed based on the real needs for the technology. ARI Monduli has an idea of the transesterification technology but the project so far has not done anything to acquire transesterification knowledge and technology.

4.2.2 Results of marketing and perception issues

In the case of marketing issues regarding the use of Jatropha oil for road transport, the project has so far only managed to market the products of the left hand side (1) of their business flow chart in the Figure 4-1 above and they were trying to secure funds from different organization including UNEP to realize the right hand side (2) of the business flow chart that has the component of Jatropha oil as fuel for engines. The competitive advantage of the Jatropha technology as fuel for road transport is its local nature and the environmental benefits of the technology. The current customer base is not known since they haven't started using the technology as a fuel for road transport. The growth trend will be revealed

---

[94] ibid, interview with Manyanga June 2003

[95] ibid, interview with Manyanga June 2003

when the technology is in use. When asked the potential distribution channel the ARI Monduli coordinator said that the distribution infrastructure is a problem and would bring a serious challenge to the technology's expansion in Tanzania. Regarding the major development costs required for the technology to get into market, the coordinator of ARI Monduli said it is the cost of establishing more farms, installation of processing plants and development of the market channels. When asked the estimated development time for the whole package of the technology, the coordinator of the ARI Monduli project responded that it might take up to twenty years. The potential barrier for the development of the technology and diffusion is the lack of incentive to end-users. When asked if the technology adoption required any behaviour change the response was if there will be no incentive to end users the change of the behaviour will become difficult.

4.2.3 Results of supporting policies

Regarding the issue of awareness of the country policy and regulations that impact the practice or use of the Jatropha technology, the response was that the Ministries of agriculture, energy and natural resources should develop a policy to address the development of the new commercial crop and its products. The coordinator of ARI Monduli also acknowledged that in the national energy policy and forest policy there are provisions that imply the development of plant oils. In this case it seems the government policies are supportive for the Jatropha activities.

In order to substantiate the interview with the coordinator of the project the researcher conducted interviews with management of members in the coalition to the project and watched a documentary in the Ministry of Agriculture Information and Communication Department.[96]

In the HPI office, the respondent was Dr. Lyimo who is the Deputy director of HPI in Tanzania and coordinator of HPI northern zone. The questions were based on the role of HPI in the project, the future of the project and the prospects for Jatropha oil as a fuel for road transport. In responding to the questions Dr. Lyimo briefly described the role of HPI in the ARI Monduli project as of monitoring the project's funds. They assumed this role due to the trustworthiness of the organization to the sponsors of the project. The respondent also revealed that the awareness of the potentials of Jatropha among rural dwellers in the northern zone of Tanzania is very high, particularly the use of Jatropha oil in lighting, cooking stoves and soap making. It was also revealed that the market for the existing products is available and growing at an increasing rate. He also said that the project has had two phases of two years, which contradicted the ARI Monduli project coordinator who said that the first phase was one year and the second is three years. This is not very relevant but it is included because other members in the coalition showed other aspects that together with this contradiction might be worth discussing and addressing as a policy challenge.

In the future, prospects of the project after the end of the funding period, the interviewee said that KAKUTE, which is the limited company in the coalition, might be left to commercialise the technology and all the products or together they might choose an

[96] The documentary was made by Mr. Mjema the Media and Communication Officer of the Ministry of Agriculture. This was personal initiative of the officer after attending Northern Zone Agriculture exhibition and being attracted with the Jatropha shows.

organization to execute the commercialisation of the technology. He also said that to use Jatropha oil for road transport is very possible due to the fact that there are a lot of unexploited Jatropha plants and a lot degraded land and unused areas where Jatropha activities can be expanded in future. He further noted that the biggest challenge would be to educate users to exploit the oil. He said it was easy for them to sell ideas for lighting and cooking stoves because people spend a lot of time searching for firewood and in some remote areas paraffin is very scarce. But for urban areas where fossil fuel is cheap it will be a challenge. The main challenges he identified were the reliability of the oil supply and the life of the engines. He said people might be reluctant to accept the technology, fearing to kill their engines. The interviewee also cautioned that in the long run it is important for a government machinery to monitor and standardize Jatropha products. Most probably government monitoring and standardization would ensure the quality of Jatropha fuel and other products. When asked about the issue of technology transfer he said the technology used to squeeze oil from the Jatropha seeds is well known in rural Tanzania.

The researcher further interviewed Mr. Adolf Matungwa, a field project officer of Monduli site in the UNDP/GEF East African Cross Boarders Biodiversity Project and Mr. Francis Sabuni a UNDP/GEF national technical officer. The same pattern of questions used in the HPI was applied in the UNDP/GEF. Mr. Matungwa who is the field worker was the main focus for the interview. In responding to questions it was revealed that UNDP/GEF has been operating in Monduli district for quite a while. The women's groups mentioned by the ARI Monduli coordinator existed even before the UNDP/GEF biodiversity project was put into operation.

They also revealed that they were attracted to join the project due to the integrative nature of Jatropha that provides an alternative source of income while supporting biodiversity and contributing to solving the problem of biodiversity conservation that has a global significance. Another reason is the fact that Mr. Matungwa knew well in advance the existence of the Jatropha plant in the areas where he coordinates the biodiversity conservation project. They noted that the traditional uses of Jatropha in these areas were to build animal fences and to extract oil and use for rubbing the animals to protect them from ticks and skin diseases. It was also noted that almost everybody with cows in the area of Monduli had the Jatropha plants to fence in the animals. However, Mr. Matungwa noted that villagers did not know other uses of the Jatropha plant, for example, the use of Jatropha oil for lighting and cooking stoves. Mr. Matungwa also noted that rural dwellers are using and are very happy with the use of Jatropha oil for lighting at night. The main reason for being happy with lighting aspect of the Jatropha oil according to the women's documentary interview is the fact that the fuel does not run out quickly. Villagers prefer to use Jatropha oil produced by them than using paraffin.

Responding on the issue of local policies and national policies that support Jatropha activities in the area, the interviewee responded that in Monduli area particularly Maasai communities have traditional policy of preserving environment. He also noted that even their behavior of moving from one place to another after every certain period of time is said to have an explanation on fulfilling the traditional environmental preservation policies that are not written but are part of their lives. On the other hand the Monduli district has a Green sector policy that integrates the sectors, which compete in using natural resource such as land, water, and livestock. It was also noted that since the ward development council that is the highest decision organ in the local level which comprises of all the professionals in the ward area, village leaders, world vision people, politicians and traditional leaders (Alaigwanan, Maasai traditional leaders) accepted the idea of exploiting the Jatropha products then

originally the issue is a bylaw to them and goes straight to their traditional policies. To conclude the interview Mr. Sabuni advised a thorough monitoring and consideration of all aspects in the development of the technology.

When interviewing Ms. Marie Mensink the project Manager of Faida,[97] which is also among the coalition members executing the ARI Monduli project, it was noted that their main interest for the project was the promotion of women through Jatropha activities. When asked the prospects of the Jatropha oil as renewable fuel for road transport Marie responded that it is possible given the fact that the plant exists in many places and is unexploited. But, she warned that it is important to consider a gradual development rather than developing the technology haphazardly and unfaithfully.

In relation to the ARI Monduli project, the researcher interviewed Mr. Mjema, a Media and communication officer of the Ministry of Agriculture, watched a documentary made by Mr. Mjema, and visited a private Jatropha farm in Moshi region near Arusha and interviewed the owner of the farm Mr. Peter Burland. The interview with Mr. Mjema revealed that the ministry in general knows almost nothing about the Jatropha development and the documentary made was Mr. Mjema's personal initiative after being attracted by the demonstration made by ARI Monduli in the Northern Zone Agriculture Exhibition. In the documentary, Mr. Mjema visited women's groups that are involved in the Jatropha activities in Monduli, interviewed them and took video pictures from all the interviews and sites visited. The groups collectively demonstrated that they would be happy to own the technology for processing Jatropha products. They also revealed that they desire to benefit from all the Jatropha products themselves. They want to extract oil, use it for lighting, cooking stoves, using residuals, selling soap and oil by themselves. Currently, they are selling Jatropha plants from nurseries to others, and selling seeds to KAKUTE Ltd., which is also member of the coalition in the ARI Monduli project. KAKUTE then process the seeds to final products and sells them or sells the seeds to other groups or individuals for a profit. For example, KAKUTE sold seed to the individual farmer Mr. Peter Burland, the owner of Kikuletwa farm in the Moshi region. The researcher also visited and interviewed Mr. Burland in his farm. The responses of Mr. Burland will be provided below. The documentary also showed one school and Monduli teachers college that are also involved in the plantation and selling Jatropha seed to KAKUTE Ltd. The management of those institutions showed they are happy to use Jatropha as a fence and to prevent soil erosion while selling seeds to gain income for meeting schools obligations like buying reading materials, sports gear and others.

However, Mr. Mjema revealed that after finishing the documentary he planned to disseminate the information to other rural areas all over Tanzania, but the coordinator of ARI Monduli who owns KAKUTE LTD accompanied with someone whom he did not know, told him not to do that. The reason provided was if rural dwellers will be stimulated and motivated to increase the production of Jatropha they will fail to buy all the seed from farmers since they claimed to be the only buyers of the seeds.

---

[97] Faida means 'profit' or 'added value in Swahili, is a micro enterprise development project operating in the Northern Zone of Tanzania. The Netherlands Development Organization (SNV) executes the project. Faida assists provider of Business Development Services (BDS), develop mechanisms for market linkages between smallholders and agricultural companies

4.2.4 Individual initiatives gaining from ARI Monduli project

Finally the researcher visited Mr. Peter Burland, the owner of the Kikuletwa farm that has 500 hectares in total and plans to have 100 hectares for Jatropha plants only. Recently he has already planted 6.5 hectares of Jatropha to gain experience and generate seeds for the expansion to 100 hectares. Mr. Burland is included here since he bought the initial seeds for his 6.5 hectares from KAKUTE Ltd., the ARI Monduli coalition member. His main purposes for planting Jatropha are for use in his tractor, selling the oil to villagers for lighting and cooking stoves and soap making. He does not want to travel every day to town to buy diesel. He has already negotiated with a Finnish engineer to go there and modify the engine to use Jatropha and other Biodiesels. Another reason that made him plant Jatropha is the fact that villagers will not steal it. Mr. Burland was also very concerned that people in the nearby village where he gets the manpower for the farm do not have lamps for lighting at night, they just light a fire for a while at night and then sleep or just go to sleep altogether at nightfall. He has already employed 35 villagers working full time in his farm. He pays them Tshs 1200/= (approximately $1 a day). He allows them to plant beans in the middle of Jatropha plant rows and other plants he is planting in his 500 hectare farm. He also argued that the government of Tanzania could help the rural poor to plant Jatropha or Moringa and solve the energy problems in those areas by giving them small grants since it is very cheap to plant Jatropha plants. He said he only used $100 per hectare to do everything up to now, when some of the plants are ready for harvesting.

Mr. Burland is very open to cooperate with companies that are willing to disseminate the Jatropha technology to villages in Tanzania and exploit the products of Jatropha plant. The main problem anticipated by Mr. Burland is the transportation of the seeds or oil from his farm or any other villages to selling points. He said roads are bad in remote areas and Jatropha seeds are heavy. He thinks transporters of these products might hesitate to send their services to remote areas.

4.3 The Case of D1 Oils Tanzania, Limited

D1 Oils Tanzania, Limited[98] is a private company registered in Tanzania in the year 2003 under the company incorporation number 46015. The company is a branch of D1 Oils UK. The main purpose of the company is to revolutionize the production of fuel for road transport from plants while gaining credits for reforesting unused land in Tanzania. The target plants are Jatropha plant and Moringa Oleifera plant. As it was noted in the brief note for cases in chapter one above, these two plants have more or less similar characteristics. The major difference is the fact that Moringa Oleifera (Well known as the miracle tree) is edible. The company is in the first phase of executing the planned 100 000 hectares of the two plants. According to the ManagingDirector[99] of D1 Oils Tanzania Limited, the company plans three phases to execute its operations in Tanzania. In the first phase which is going on now, the company selects the suitable communities and identifies 5000 hectares of land for the first phase of the project, presentations and explanations for the process to all stakeholders, finalising arrangement for the financing of the project, undertaking an environmental impact report for the areas selected, finalizes the operations plan, including identifying the potential local market for the by-products, establishes Development Trusts, completes the legal documentation in regard to the land ownership or lease of the land,

[98] More information on D1 Oils Limited can be found at http://www.d1plc.com or www.d1-power.com

[99] Interview with Mr. Malcolm Doherty the Managing Director of D1 Oils Tanzania Limited

establishes a training programme, establishes a site for nursery production, orders the necessary farming equipments and materials, begins planting in the nurseries, plants the first trees, takes cuttings of the initial trees for the second planting, sets up the first oil expeller and ram presses and trains for the tree management and harvesting.

In the second phase that is going to take place in year three, they will place the Biodiesel refinery plants, set up biogas digesters, complete the training for the bioenergy production phases and development of the by products and clarify the markets. The last phase will involve the marketing and sale of by-products, developing community with regard to market infrastructure and by products and expanding the programme where suitable.

4.3.1 Results on technology issues

When answering questions that are related to the technology section of the interview protocol, the Managing Director of DI Oils Tanzania Limited Mr. Malcolm Doherty said that D1 Oils would use D1 Power Technology called D1 Power Independent Fuel Plant designed and built in UK. The plant has a capacity to produce 22 000 litres per day. He also said that the technology description exists in opportunity sheets and issued patent. The technology is automated and requires no operators during normal operations. The method utilizes software and process systems to operate. The technology processes a complete transesterification from various feedstocks. In Tanzania, D1 power would be used to process methyl ester that will be created by cracking Jatropha oil or Moringa oils before careful blending with specialized improvers and extenders. The D1 methyl ester or Biodiesel can be stored and handled just like petroleum diesel. If the machine fails it has an automatic backup that takes over and the installation of the D1 Power Technology does not need a permanent structure and as such no planning permission is required for its placement. It is a movable technology. The Director said that the plant can be installed and producing its first fuel within a day. The plant needs a three phase electrical hook up and a readily available water supply. These refinery plants are going to be installed in every district under district management and people will sign duration contract to use this plant. The seed expellers will be distributed in rural areas and retained by D1 Company and less than 10% will be retained for the community. The main oil expelling processing plant for Tanzanian products will be installed most likely in Dar es Salaam.

The state of the technology is finished and the technology has been field and commercially tested. The important activity needed for deploying the technology on a wider scale is the planting of the Jatropha and Moringa trees. The anticipated duration for a commercial use of the technology in Tanzania is 6 months.

4.3.2 Results of marketing and perception issues

In answering questions on marketing issues, the Managing Director of the D1 Oils Tanzania Limited said that the current customer base for the fuel is in UK and they will secure the by products market locally. He showed the estimated annual product from 15 000 hectare project of land dedicated to energy plantations as: Oil 30 000 000 litres, Biomass 75 000 000 kg, electrical power from biogas and biogas for home cooking, Biodiesel, organic fertilizer, Glycerol after Biodiesel refining, packaging and or insulating material, captured heat for hot water, soap and honey are by product of the programme, full time jobs 2000, part time jobs 1000 and other small business. He also indicated that people are very supportive of the

project due to the fact that is going to provide employment and add sources of income to the community, particularly rural dwellers.

When asked how they are going to transport the oil or seeds from the rural areas, Mr. Doherty responded that they would use the existing channel of petroleum diesel. He said when the petroleum tanks are coming back after sending petroleum fuel they would carry Jatropha oil or Moringa oil.

They are anticipating good reception from the rural dwellers due to the fact that these plants will restore nature and help to provide good atmosphere for the betterment of the villagers. The plantation of Jatropha and Moringa plants will also increase the opportunities of rural people to gain the finances for plant oil plantation from the community trust funds that will be established by the company. He also said that plantations will add the opportunity for the gaining of carbon credits. The managing director of D1 Oils Tanzania limited also acknowledged that the Jatropha and Moringa plantations are labour intensive but without too many complexities.

In the case of potential barriers to the market, the Managing Director of D1 Tanzania said the only problem they anticipate is the marketing of by-products because they are not sure of the local market.. He said they are building the acceptance now by presenting their idea to various people in different levels locally and nationally.

Regarding the market for the main product, oil, they are assured of the market to sell Biodiesel in UK When asked why they want to sell the Biodiesel in the UK instead of Tanzania he said the use of Biodiesel fuel in Tanzania would require very serious education to car owners. He said in the UK the market is already established. People are willing to pay more for clean fuel like Biodiesel. He said awareness creation needed to be done to make people interested in using Biodiesel in Tanzania.

4.3.3 Results of local and national supporting policy

Talking on the issue of local policies and national policies for the support of the project, Mr. Doherty said that to proliferate the knowledge in rural areas they started using village elders to gain acceptance and understand the values and formal and informal local policies. In the case of the national policy Mr. Doherty said that they have done several presentations to cabinet members and the reception was excellent, he said even the speed of registering their company suggests that they are accepted nationally. He said what they want to do also has international acceptance, for example the issue of reforestation which in turn will preserve the biodiversity of the country. The forests also will act as a Carbon sink that exists in the atmosphere.

4.4 Discussion of the findings

The broad objective of this study was to assess policy implications and institutional issues for deploying Jatropha technology as a fuel for road transport in Tanzania. In addressing the broad objective, the following specific questions are answered: What are the technical and process issues for extraction and use of Jatropha oil? What are the marketing and perception potentials for the Jatropha oil technology in Tanzania? And what are the local and national policies that guide the production and use of Jatropha oil for road transport? In answering these study questions the study partitioned the issues into three categories based on the study

questions. These categories are technology issues, market and perception issues and policy issues. The discussions of responses from the case studies follow.

4.4.1 Technology issues

The interview and documentation results show that ARI Monduli project, through KAKUTE Ltd., manufacture manual ram presses. The literature review also revealed that Approtec, a Kenyan based non-profit organization with a representative office in Tanzania, manufactures ram presses, which are less expensive in comparison to other manual ram press manufacturers in Tanzania. The Jatropha information website also provides that a non-profit organization owned by Evangelical Lutheran Church of Tanzania 'Vyahumu' [100] manufactures expellers. The fact that the documentary made by Mr. Mjema showed that women working in the women's groups have a genuine interest to own relevant technologies in order to exploit Jatropha products and benefit fully from their work implies that even if Jatropha oil extraction technologies are made domestically, still the technology has not reached the grass roots level where Jatropha is planted. The technological gap of women was also revealed in the Jatropha demonstration session when only one woman, who is an employee of the KAKUTE Company, attended without doing anything in comparison to nine men who attended. All participants in the demonstration were urban based. One of Jatropha's selling points represented in the literature review is the fact that it promotes women by providing a source of income and employment, particularly in rural areas. However, the promotion aspect of Jatropha in Tanzania is somehow not working well since women only plant and harvest Jatropha seeds for selling to others without really enjoying the by-products of Jatropha such as the fertilizer and biogas produced. All major Jatropha oil extraction is done in urban areas. There are probably other reasons for women not owning technology in rural areas, for example lack of micro finance loan services for rural women and lack of information on the availability of these technologies. The interview with media and communication officer Mr. Mjema revealed that probably the few people with Jatropha information in Tanzania are trying to use and profit from the ignorance of rural dwellers, especially women. This is derived from the fact that Mr. Mjema was told by the ARI Monduli coordinator not to disseminate the information in rural areas. The policy challenge for the government in this respect is to empower women to access relevant technologies and information regarding the Jatropha products and accompanied technologies in order to proliferate the Jatropha oil in the Tanzanian market.

The second case study shows that D1 Oils Tanzania, Ltd. has the expelling technologies for seed oil extraction and on top of that, D1 has the D1 power technology that is used to modify oil to adapt it to the diesel engines. D1 Oils has transesterification plants. The company is planning to produce methyl ester in Tanzania. The literature review also supported the production of methyl ester as an economically viable operation on a large scale.[101] The technology capacity of producing 22 000 litres per day and the initial investment for the first phase, which amounts to $5 million imply that a very serious production of oil plants would take place in rural areas. This has a danger of occupying rural dwellers to the extent of failing to allocate time for their food production. The fact that the Managing Director acknowledged that the Jatropha activities are labour intensive supports this

[100] Vyahumu is a swahili word reteraly means produced within the country

[101] Foidl, *et al.* (1996).,op.cit,p.80

argument. The fact that the technology is automated and sometimes during operations the plant does not need operators also indicate that instead of Jatropha increasing employment it would be reducing skilled employment and only increasing unskilled labour in the plantation fields. The fact that the technology is developed in the UK means it might face the challenge of cultural orientation. Furthermore, the D1 Oils technology needs three phases of electricity. This implies that the technology is urban based due to the fact that most rural areas in Tanzania do not have electricity. Literature demonstrates that one of the strong potentials of Jatropha activities is the fact that it supports rural dwellers to stay in rural areas. But, the urban orientation of D1 technology seems to suggest that Jatropha activities under their technology would not help to reduce the problem of urban migration. On the other hand, in order for Jatropha to be used as an alternative for petroleum diesel there is a need to deploy relevant technologies such as D1 power technology. Therefore, the policy challenge probably is the emphasis on a gradual development of Jatropha technology for road transport, taking into consideration that the transesterification process could be done on a small scale at village household level. Most likely, the gradual development would allow for some experience to be gained along the way and would provide enough time for a thorough thinking regarding the general development of Jatropha as renewable fuel for road transport in Tanzania. The gradual development would also leave room for Tanzanians to embark on investment and provide a reasonable challenge for corporations like D1 Oils Tanzania Ltd., which appears to have a monopoly thinking for plants oil development in Tanzania. The government policy challenge in this case is to strictly prohibit the monopolization of plants for oil development and to guide the development of the plant oil technology that benefits fairly all the stakeholders through genuine contracts and open dialogues if possible. The government should also develop a policy to make sure that the required knowledge and technology for Jatropha oil, as a fuel for road transport is available to a wider community who are interested in the development. As noted above since the D1 technology is going to be installed in all the districts and rural dwellers need to sign duration contracts another policy issue to be taken into consideration is for government to provide legal support for rural people to sign genuine contracts.

To summarize technology issues, domestic technology development is well advanced in the extraction of oil from seeds only. The existing technologies that are developed domestically are manual ram presses that are manufactured by KAKUTE and Approtec and expellers that are manufactured by Vyahumu. The technologies and knowledge to refine Jatropha oil, such as transesterification processes, lag behind and probably is not executed anywhere in Tanzania. The domestically manufactured technologies also need to be transferred and used on a wider scale in all corners of the country. A foreign-based company executing its first phase of Jatropha and Moringa plantations owns the refinery technology that is potentially going to be transferred later this year in Tanzania. However, other simple refinery technologies and knowledge could be transferred on a wider scale in Tanzania from all over the world where the technology and knowledge have gained reputable experience.

4.4.2 Market and perception issues

It should be recognized that in order for Jatropha technologies as a fuel for road transport to be successful, there must be a market and the technologies must among other things be socially and culturally sustainable. The social and cultural sustainability of the technology could result in greater success in the uptake of the technology and reasonable level of community awareness and involvement. The integrated offers of Jatropha system which is revealed in the literature review and the fact that the success stories of Jatropha in many places, such as Mali, take place in rural areas promotes rural community ownership of

technologies. To this end questions were asked to reveal the market situation and anticipations and community's perception of Jatropha activities.

In the case of market and perception issues for ARI Monduli project, the market base is on the use of the Jatropha oil for cooking stoves and lamps, oil for soap, seedcake for biogas and slurry as an organic fertilizer. The market for Jatropha oil as fuel for engines is not realized. Even though the literature revealed that methyl ester from Jatropha and dual fuelling are superior to blending, still to start with one would expect that the ARI-Monduli initiative would make a trial of blending Jatropha oil with diesel, yet this has not been done. One possible reason for this is that use of Jatropha oil for transport would require a large increase in its production. Under normal circumstances, an increase in production leads to a decrease in price. The fact that the project involves a profit-making company might act as a deterrent for increasing the supply of Jatropha oil in order to keep the price of Jatropha oil high and thus the profit higher in using the oil in soap making and few household uses. On the other hand, the use of Jatropha oil for road transport without blending requires a sizeable amount of long term investment. In this case probably lack of long-term loans is a barrier for the market expansion to cater for road transport fuel The lack of finance could also be substantiated by the fact that the coordinator of the project also revealed that they applied for financial support from UNEP and other funding organization without success in order to realize the energy for road transport component of Jatropha oil. Furthermore, the issue of lack of finance to carry out the venture is also revealed by other scholars who observed that in Tanzania only two institutions (Tanzania Investment Bank and National Social Security Fund - NSSF) have a policy to allow long term lending in the energy sector.[102]

The problems of distribution channels revealed by the responses from ARI Monduli imply that even their operations, which are in Arusha urban areas, are poorly located. The price of Tshs 2000 (approximate $2) per litre of Jatropha oil is a result of, among others, transportation costs of seeds from rural areas to urban areas for processing. The distribution problems most likely represent the fact that Jatropha technologies need to be rural based for solving rural problems. In the case of perception issues it seems the ARI Monduli has played a great role in starting to stimulate the use of Jatropha in Tanzania. Even the documentary revealed that despite the demand for technology women see the project as a good thing by introducing a new source of income to the communities through selling seeds and nurseries. The positive perception emanated from the fact that probably any new source of income might be welcomed in Tanzanian rural areas even if people will be exploited.

Based on the above observations, the policy challenge is for the government to motivate financial institutions to finance long-term investment for renewable fuels, as well as to develop a policy to restrict any type of monopolization of essential service in the renewable energies industry like the production of Jatropha oil for road transport and other uses. The government also needs to develop a regulatory framework to guide private producers of the fuel for road transport from plants to operate in harmony with other stakeholders such as farmers. Policy also needs to place emphasis on education and information dissemination about Jatropha oil as a source of renewable fuel and develop many demonstration sites for using Jatropha oil as fuel for road transport. It follows that the government needs to consider the incentive policy for Jatropha oil producers and car owners to use Jatropha oil, and any Jatropha initiatives in Tanzania should learn from other countries' experiences.

---

[102] Marandu, E.E. (2002). The prostects for local private investment in Tanzania's rural electrification, *Energy policy* 30:, p.981

Although the market for Jatropha oil from D1 Oils Tanzania Limited is said to be already secured in the UK the question one might ask is why not sell in Tanzania and save the country huge amounts of foreign currency that are spent in acquiring petroleum diesel yearly? Of course if Tanzania exports Jatropha oil to the UK it could get more foreign currency to buy fossil fuel and other essential needs. However, under the current scenario in which the only exporter from Tanzania will be D1 Oils, most profits will return to the UK, especially taking into consideration that the company is headquartered in the UK and will own the farms, oil presses, and transesterification technology itself. Tanzania will supply the human resource needed for the production of Jatropha fuel.

The policy challenge for the government is how to keep the added value of Jatropha in Tanzania. The ideal situation would probably be for Tanzanians to own the Jatropha farms, technology and use Jatropha products while exporting only the surplus. This might also help to support savings in the rural community and empower rural dwellers to decide whether to sell or use their products.

In the D1 scenario, the products that will be sold locally are by-products of Jatropha oil such as biomass, Biogas, organic fertilizer, glycerol after Biodiesel refining, soap and honey production in the forests. One could argue that when developing the market for by-products it is possible to create awareness and eventually develop a market for the use of Jatropha oil for road transport in Tanzania as well. However, since the focus of the market was not revealed during the interview and based on the fact that the purchasing power of rural dwellers is not high as noted by the difficulties anticipated probably the market for the by-product will be secured in urban areas.

With regard to transportation issues, the plans of D1 to use the existing petroleum diesel transportation system could be seen in two different ways. First, since the refinery technologies will be installed in the main district towns, the transportation with petroleum diesel transporters might be possible because almost all the main districts have filling stations, which provides the possibility to negotiate and use this channel of transportation for Jatropha oil to the ports for exportation. Secondly, one could argue that the main challenge is for transporting the Jatropha oil in large scale from villages to refinery plants in districts. Some of the villages are very remotely located and roads are extremely bad, as revealed by Mr. Burland who was interviewed by the researcher about the issue of difficulties in transporting Jatropha seeds and oil from villages. The transportation of Jatropha oil from villages might cause another problem of villagers using a lot of time in struggling to transport the oil and other Jatropha activities expecting to get quick hard cash. This situation might lead to less time spent on food crops and animal husbandry. As a result, the rural economic situation might continue to be poverty stricken instead of Jatropha supporting poverty reduction. In this case the researcher is of the opinion that the technology such as manual ram presses should be transferred to villages on a large scale to make them use the Jatropha oil to solve rural energy problems and they will be shown also the market to sell their surplus to the refinery plants in the districts the same as they do with other crops. The policy challenge for the government is to educate and stimulate the plantations of Jatropha plants and to provide micro finances for rural dwellers to own simple processing technologies for the use of Jatropha and finally the goal of rural energy problem will be achieved and the use of Jatropha oil for road transportation will also be achieved because villagers will sell their surplus to district refinery plants.

4.4.3 Regarding the issue of perception

The fact that customers in the UK have expressed interests in D1 Biodiesel products from Tanzania might provide an opportunity to teach Tanzanians about how Biodiesel works in the UK. This could stimulate local involvement in both production and use of biodiesel. (a. In the case of rural areas the use of village elders would make the project be accepted easily by rural people. But, most likely the acceptance will not survive long if they see they are being cheated or just exploited. For the perception issues probably again the best issue is for using a participatory approach: let them do the way they want while motored by government machinery and stimulate excess amount of production and buy the surplus later. They will use oil for lighting, cooking stoves, soap making and medicinal purposes but all these do not require a lot of Jatropha oil so if the production is very high compared to time spent for the production they will have some surplus to sell to the refinery plants or export. The policy challenge is to support the plantations of Jatropha as a hedge in all food crop fields, around the schools, houses and other unused land. Another perception issue is the fact that if villagers plant Jatropha and use D1 presses and then after being paid their salaries they use the money to buy by-products from D1, this probably will make the company be perceived negatively by villagers. On the contrary if you promote their own use of Jatropha oil and its by products and just insist they sell the surplus, then this might attract their involvement and work synergistically.

4.4.4 Supporting policy issues

The government did not indicate any institutional framework nor policy to support plant oils in its National Energy Policy. The ARI Monduli project coordinator also revealed that there is a need for the government to develop a policy for exploitation of plant oil like Jatropha and its products. Probably the absence in the energy policy means that the government ministries are not aware of the fact that these developments are going on in the country, a situation perhaps compounded by the hiding of information, which was revealed by the restriction of information dissemination made by the coordinator of ARI Monduli to the Media and communication officer in the Ministry of Agriculture. The impact of the absence of the plant oil in the national energy policy and renewable energy status of the country is that most likely in the national energy agendas the issue is not discussed in various meetings. Thus there is a high probability that Jatropha activities in the country might lack political support. Furthermore, the ignorance of the government about these activities might lead to a haphazard development of Jatropha activities in the country by few people exploiting others. On the other hand, if the issue were to be addressed in the national energy and renewable energy status documents and the government were fully aware of the Jatropha activities and the contributions it could make to the entire country, the development of the Jatropha activities would be guided by the policy document and address the interests of all stakeholders in the country. The policy challenge is for the government to establish a policy statement requiring all initiatives with national interests to disseminate information to all stakeholders including the government ministries.

The local green policy mentioned by Mr. Matungwa the field officer of the GEF project in Monduli district gives support to the development of Jatropha activities. The value of this kind of policy is its acceptance in the community. Since the policy is made locally with the involvement of community members themselves, it implies that it would be supported highly. For example, the existence of the women groups in the district implies that the community is well organized by some sort of local policies in the community where ARI

Monduli is operating. The situation might be different in other communities within Tanzania. For example, the fact that many Maasai men migrate to major cities and work as night guards forces Maasai women in Northern Tanzania to come together and have Jatropha to fence their cattle. So it is easier to introduce more uses of Jatropha to this community than to other communities in Tanzania where people do not have ready formulated women groups and local policies to support initiatives. The policy issue here is for the government to have a well-stipulated framework that guides the formulation of local polices and by-laws countrywide. This could be an umbrella policy statement that guides the entire country.

In the case of D1 Oils Tanzania Limited the presentation made to the country cabinet probably is a good step toward informing the policy and decision makers on the potentials of the plants oils. The value of these presentations may be the inclusion of the issue in the policy agenda in the next revision of the policy. As a result, the government ministry responsible might be fully involved in the development in the future. This is probably very true since D1 presentations to the ministers were made earlier this year (2003), while the last energy policy final document came out in the year 2002. The fast registration D1 got from the government does not necessarily mean that the company is accepted at the national level. The government needs to show in its policy documents that it really supports these initiatives. The fact that the Jatropha and other plant oil initiatives are under discussion internationally and on international policy agendas might also help to push policy issues in their information channels towards government machineries.

4.5 Summary

To begin with technology issues, domestic technology development is well advanced in the extraction of oil from seeds only. The existing technologies that are developed domestically are manual ram presses that are manufactured by KAKUTE and Approtec and expellers that are manufactured by Vyahumu. The domestically manufactured technologies also need to be transferred and used on a wider scale in all corners of the country. The technology and knowledge to refine Jatropha oil, such as transesterification technology, lags behind and probably is not used anywhere in Tanzania. A foreign-based company executing its first phase of Jatropha and Moringa plantations owns the refinery technology that is potentially going to be transferred late this year or earlier next year in Tanzania. However, other refinery technologies and knowledge could be transferred from other experienced bioenergy technology countries like France, Italy, Austria and German.

With respect to the marketing and perception issues, the organizations that are dealing with Jatropha initiatives in Tanzania have so far done a reasonable amount work to stimulate rural community to earn some more income through Jatropha activities. However, rural people in other areas need information about this plant and support to own the technology for processing Jatropha seeds. The issue of restricting Jatropha information dissemination while pioneers of successful Jatropha activities in African such as Henning [103] provides information for the development of Jatropha initiatives all over the world without hesitating to some extent reduces the credibility of the ARI Monduli project. This scenario raises more questions than answers. To this end therefore, the government ministries related to the plant oil promotions need to establish polices and institutional framework to gather information regarding the development of all the renewable fuel technologies. The government also

[103] Henning, K., is the engineer of Internet Jatropha information centre at www.Jatropha.de. He was also the a director of Mali Jatropha project under GTZ

needs to establish a policy to push financial institutions to lend long term and short-term loans for the plant oil initiatives in Tanzania. The major problem anticipated is the transportation of the seeds or oil from villages to urban areas where most likely refinery plants will be installed. However, if Jatropha activities are developed carefully and all the added values of Jatropha are retained in the villages then automatically the surplus might be sold in urban areas for refinery to use for road transport or blending without refining even if other options are superior that blending.

With regard to the policy issues, there is a lack of coordination among different players in the issue of Jatropha in Tanzania. The main actors in the issue of Jatropha are the Ministries of Energy and Minerals, Agriculture, Natural Resource and the National Environmental Management Council, and organizations such as those dealing with ARI Monduli project, D1 Oils Tanzania Limited. This lack of coordination leads to the problem of Jatropha activities being developed haphazardly without government policy guidance in Tanzania. Another policy issue is the lack of a mention to the issue of the Jatropha as source of renewable fuel in the national energy policy and in the renewable energy status of Tanzania. The policy challenges for the government in this case are for the government to recognize all existing renewable energy sources in Tanzania by establishing renewable energies information systems and comprehensively reporting any existing renewable energy sources and new inventions in the policy documents. A regulatory framework will eventually need to be established as well.

5. Conclusions, policy implications and recommendations

The general purpose of the study was to assess policy implications and institutional issues in relation to the transfer and deployment of Jatropha technology as a viable renewable fuel for road transport in Tanzania. In order to fulfil this broad purpose, the specific objectives of the study were three fold:

- To describe Jatropha technology with special focus on the seed oil extraction and oil final use.
- To determine market potentials in Tanzania and community perception of Jatropha technology package as renewable fuel.
- To examine local and national supporting policies for the use of Jatropha oil as fuel for road transport in Tanzania

In order to achieve these objectives the study answered the following specific questions:

- What are the technology and process issues for the extraction and use of Jatropha oil?
- What are the market and perception potentials for the Jatropha oil technology?
- What are the local and national supporting policies that guide the production and use of the Jatropha oil for road transport?

The presentation and discussion of the findings regarding the above objectives and research question lead the study to the following conclusion, policy implications and recommendations:

In answering the first research question Jatropha seeds extraction technology such as manual ram presses and expellers could be found in Tanzania and nearby countries reasonably priced. The technology and the process to extract oil from Jatropha seeds are not complicated. Even novice users at village level could operate them easily. The transesterification technology and knowledge for refining Jatropha oil could be transferred by direct foreign investment (FDI), Joint venture, licensing agreement, international subcontracting and turnkey contracts from various Biodiesel production experienced worldwide. For example the D1 Oils Tanzania Limited with a host D1 UK has indicated a great interest to transfer the technology and produce methyl ester through FDI method. The women's groups in rural areas already dealing with Jatropha farming revealed a strong desire to own technology for processing seeds. There is a need to establish short term and long term financing loan service for rural dwellers and long-term technology investors respectively.

The policy implications for this conclusion is that the government needs to consider the establishment of policies that empower rural dwellers, especially rural women, in order to proliferate Jatropha oil in the market by giving them, through various arrangement, necessary technologies for seed processing such as manual ram presses and expellers. The government also needs to establish policies that put emphases on the gradual development of plant oils activities in Tanzania while encouraging knowledge adaptation when technology transfer is taking place in order for the indigenous community later to develop the technologies locally. The government also could establish a technology transfer model in its national energy policy document that is suitable for Tanzania's rural areas. Finally, the government could establish a

policy for loan lending in short term and long term to boost the Jatropha activities development.

The specific recommendation for this aspect is that relevant government ministries should review and modify existing policies and regulations to provide adequate incentives for the Jatropha related technology and knowledge transfer within the country and from abroad while guiding the interests of all stakeholders. Additionally, the government needs to establish a policy to facilitate the lending of short term and long-term loans from the financial institutions to the people who are interested with Jatropha development as a fuel for road transport.

The conclusion to the second research question is that the market for the Jatropha fuel is already defined for the D1 Oils Tanzania Limited, that is the UK, and almost nothing has been done for Jatropha oil for road transport by the ARI Monduli project. However, other products such as Jatropha oil for cooking stoves, for lighting and soap making are slowly penetrating the Tanzanian market. The organizations dealing with Jatropha activities need to make sure that people at the grassroots level support them since they are the ones who produce Jatropha and who will be producing Jatropha in large scale. There will be some problems to transport the oil from rural areas to the market in cities for refinery and uses.

The policy implication in this aspect is for the government to formulate a policy to stimulate local markets for the Jatropha products and exportation of surplus products. The government also needs to develop a policy to strictly restrict monopolization of the development of Jatropha activities in order to develop a fair balance of demand and supply. Further policy implication is for the government to facilitate the development of many demonstration sites that use Jatropha oil as a fuel for road transport. This could be done by establishing a regulatory framework and policy to run the demonstrations exercise. This will create a local market for the Jatropha oil as an alternative clean fuel instead of petroleum diesel. Along with the above policy implication is the creation of a regulatory framework to support the planting of Jatropha as a hedge in all food crop fields, around the schools, houses and other unused land and guidance for the rural people in signing contracts in their involvement in the Jatropha activities.

The specific recommendation from the market and perception conclusions is for the government to develop policies and procedures for Jatropha seminars, conferences and Jatropha use as a fuel and other uses demonstrations in a massive way to create customer, producer and other stakeholders' awareness. Furthermore, the government needs to establish Jatropha contracts-supporting institutional framework to help rural dwellers when signing contracts.

The responses and discussion to the last research question lead to the conclusion that there is no explicitly stated policy and institutional framework to support Jatropha activities in Tanzania. The related ministries such as Ministry of Energy and Ministry of Agriculture are not coordinated in developing plants for energy, particularly the Jatropha plant. The awareness of Jatropha as a renewable source of fuel by key players such as members of the Ministry of Energy is very low. There is some Jatropha information-hiding operations going on in Tanzania. There are some local supporting policies that imply the support of the development.

The development and technology transfer for a wider use of Jatropha oil as fuel for road transport in Tanzania require a policy and an institutional framework to coordinate different ministries that should be involved in the development of Jatropha activities. The policy should coordinate the Ministry of Energy and the Ministry of Agriculture. An additional policy implication is for increasing awareness of Jatropha's benefits drastically by educating people on all that Jatropha offers and how it could be exploited for road transportation. There is a need for a policy to support individual initiatives and to support Jatropha information dissemination to different stakeholders in order to have a high degree of awareness of Jatropha contributions to the rural community developments.

The specific recommendation is that the government should increasingly participate in the development of the plant oils such as Jatropha plant since they seem to provide viable solutions to many rural problems. The government should link different ministries related to the development by establishing policy subcommittees to have collaborative policy statements. The government also needs to establish an energy information system that facilitates the dissemination and collection of renewable energies information from all players.

5.1 General recommendation

It is generally recommended that Jatropha development should stick to its traditional philosophy of acting as a fence for food crops, houses, schools etc. The emphasis for developing Jatropha as a viable substitute for diesel and paraffin need to target the rural energy problem first while stimulating the production of surplus that will be sold or exported by rural dwellers. The developments of Jatropha in general need to take a bottom up participatory approach. The involvement of schools and colleges in the development of Jatropha exploitation could help the dissemination of information to a wider rural community.

5.2 Areas for further research

The following are areas for further research identified:

- The long-term durability of the engine using Jatropha oil and or diesel blends needs further research.

- Toxicity and detoxification of Jatropha in order to be sure that the oil extraction process does not affect human beings need further research

- The differences and optimisation of outputs from different ram presses manufactured by different manufacturers and expellers need further investigation.

- The Cost and benefit analysis of Jatropha activities from plantation to use as esters or dual fuelling needs to be carried out.

Bibliography

Alexander's Gas & Oil Connections. (2001). Jatropha Oil Instead of Gas – Oil. *News & Trends: Africa Volume* 6: 6, 22-03-2001 [Online] http://www.gasandoil.com/gesa Accessed 5/5/2003.

Approtec (2001) *Technologies for Businesses- A Scaleable and Sustainable new model for alleviating Poverty.* [Online] http://www.approtec.com Accessed 9/5/2003

Axtell & Fairman (1992). Minor Oil Crops, *FAO Agricultural Services Bulletin* No 94. [Online] http://www.fao.org/inpho/vlibrary/x0043e/X0043E00.htm#Contents Accessed 11/5/2003

Begggs, E. Robert. (1997). *Renewable Oil fuels and Diesel Engines as Components of Sustainable Design*, MSc. Thesis University of Waterloo, Faculty of Science, Technology and Environmental Division

Bless, C. and C. Higson-Smith. (1995). *Fundamentals of social research methods: an African perspective***.** 2nd Ed. Cape Town: Juta and Co.

Boesherz IN Nieminen, Mika (2003). *Biodiesel an Option for European Transportation: Small-scale biodiesel production from used frying oil,* ARPEA I paper IIIEE, Lund University

Bright B. P 1991. *Introduction to research methods in postgraduate theses and dissertations.* Kingston: Newland Papers

Chachage, B. (2003). *Jatropha as a Source of Renewable fuel for Energy Services in Developing Countries*: ARPEA II, IIIEE, Lund University

Diesel engines and gasoline engines (2003). http://www.isuzu.co.jp/world/technology/clean/diesel_gasoline02.html Accessed 16/9/03

Environmental Africa (2003). Jatropha activities. [Online] http://www.jatropha.de/zimbabwe/ea/ea-jcl-activities.htm Accessed 10/05/03

Foidl, N. & Eder, P. (1997). Agro-Industrial exploitation of J. Curcas. In: Gubitz, G.M., M. Mittelbach., & M. Trabi. (1999). Exploitation of the tropical oil seed plant Jatropha curcas L. *Bioresource Technology,* 67: 73 – 82

Foidl, N., G. Foidl,, M. Sanchez., M. Mittelbach & S. Hackel. (1996). Jatropha Curcas L. As a Source for the Production of Biofuel in Nicaragua. *Bioresource Technology,* 58: 77 - 82

Gubitz, G.M., M. Mittelbach., & M. Trabi. (1999). Exploitation of the tropical oil seed plant Jatropha curcas L. *Bioresource Technology,* 67: 73 – 82

Haas, W. & Mittelbach, M. (2000). Detoxification experiments with the seed oil from Jatropha Curcas L, *Industrial crops and products: An international Journal*, 12: 111 – 118

Heller, J. (1996). Physic Nut. Jatropha Curcas L. Promoting the Conservation and use of Underutilized and neglected Crops. In. Gubitz, G.M., M. Mittelbach., & M. Trabi. (1999). Exploitation of the tropical oil seed plant Jatropha curcas L. *Bioresource Technology,* 67: 73 – 82

Henning, K.(1998). *Integrated Utilization of Jatropha Plant.* [Online] http://www.jatropha.de Accessed 5/5/2003

Henning, K.R (1998). Use of Jatropha Curcas L. (JCL): A household perspective and its contribution to rural employment creation. Experience of the Jatropha Project in Mali, West Africa, 1987-1997. *Regional workshp on the Potential of Jatropha Curcas in Rural Development and Environment Protection: A workshop sponsored by the Rockefeller Foundation and Scientific & Industrial Research & Development Centre*, 13 – 15 May 1998, Harare, Zimbabwe [Online] http://www.jatropha.de Accessed 7/5/2003

Henning, K.R. (????). Economic Analysis of the Jatropha System in Mali. *A short version of a study by Hans-Jurgen wiemer.* Available at http://www.jatropha.org accessed 20/7/2003

Henning, K.R In Axtell & Fairman (1992). Minor Oil Crops, *FAO Agricultural Services Bulletin* No 94. [Online] http://www.fao.org/inpho/vlibrary/x0043e/X0043E00.htm#Contents Accessed 11/5/2003

Huysamen, G.K. 1994**.** *Methodology for social and Behavioral sciences.* Bloemfontein: Southern Book Publishers

Jain, R.K., Martyniuk, A.O., Harris,. M.M., Niemann, R.E. and Woldmann, K. (2003). Evaluating the commercial potential of emerging technologies, *International Journal of Technology Transfer and Commercialisation,* Vol. 2 (1): 32-50

Kothari, C.R. (2000). *Research Methodology: methods and techniques*: New Delhi: Wishwa Prakashan

Korus, A.R., Hoffman, S.D., Bam, N., Peterson, L.C. and Drown, C.D. (????) Transesterification Process to manufacture ethyl Ester of Rape oil, Department of Chemical Engineering: University of Idaho [Online] http://biodieselgear.com/documentation/University_of_Idaho_Biodiesel.pdf Accessed 28/8/2003

Kumar M.S., Ramash A. & Nagalingam. (2003). An experimental comparison of methods to use methanol and Jatropha oil in a compression ignition engine. *Biomasss and Bioenergy,* 25: 309 - 318

Larson, Eric & Williams, Robert. (1995). *Biomass Plantation Energy Systems and Sustainable Development, Energy as an Instrument for social Economic Development*: UNDP

Liberalino, *et al.* (1988). Seeds: Chemical analysis and toxicity. In Gubitz, G.M., M. Mittelbach., & M. Trabi. (1999). Exploitation of the tropical oil seed plant Jatropha curcas L. *Bioresource Technology,* 67: 73 – 82

Lindegger (1999). *Research methods in clinical research,* In Terre Blanche, M. and Durrheim, K. (eds) (1999. *Research in practice: applied methods for the social sciences.* Cape Town: UCT press, pp. 255-268

Marandu, E.E. (2002). The prospects for local private investment in Tanzania's rural electrification. *Energy policy,* 30: 977- 985

Martinot, E. (1999). Renewable energy in Russia: markets, development and technology transfer, *Renewable and Sustainable Energy Reviews*, 3: 49 – 75

Medical dictionary search engine at http://www.books.md/B/dic/biodiesel.php Accessed 11/9/2003

Metschies, Gerhard. (2001). *Fuel Prices and Vehicle Taxation: with comparative table for more than 160 countries. Pricing Policies for Diesel fuel, Gasoline, and vehicle Taxation in Developing Countries.* [Online] http://www.zietlow.com/docs/fuel%202000.pdf Accessed 4/5/2003

Mikkelsen, Britha. (1995). Methods for development work and research: a guide for practitioners. New Delhi: Sage Publication

Ministry of Energy and Minerals. (2002*). The national Energy Policy*, The United Republic of Tanzania government publication

Mokua, R. L. (2000). *Technology Development and Transfer for Waste Minimisation and Management: A case study of Cato Manor, an informal settlement in Durban, South Africa.* MSc. Thesis Lund, IIIEE

Mouton, J. (2001). *How to succeed in your master and doctoral studies: a South African guide and resource book.* Pretoria: Vanshaik Publishers.

Mwihava, N.C.X. (2003). *Brief paper on status of renewable energy development in Tanzania.* Ministry of Energy and Minerals: Dar Es Salaam.

Openshaw, Keith. (2000). A review of Jatropha Curcas: an oil plant of unfulfilled promise, *Biomass and Bioenergy* 19:1-15

Pramanik, K. (2003). Properties and Use of Jatropha curcas oil and diesel blends in compression ignition engine. *Renewable Energy* 28: 239-248

Pryde, E.H. Vegetable oil as diesel fuels: Overview. In. Pramanik, K. (2003). Properties and Use of Jatropha curcas oil and diesel blends in compression ignition engine. *Renewable Energy,* 28: 239-248

Rowley, J. (2002). Using case study in research. *Managing research News,* 25(1): 16-27

Ryan T.W. *et. al.* (1984). The effects of vegetable oil properties on injection and combustion in two different diesel engines, In. Pramanik, K. (2003). Properties and Use of Jatropha curcas oil and diesel blends in compression ignition engine. *Renewable Energy* 28: 239-248

Solsoloy, A.D., (1993). Insecticidal action of the formulated product and aqueous extract from physic nut, In. Gubitz, G.M., M. Mittelbach., & M. Trabi. (1999). Exploitation of the tropical oil seed plant Jatropha curcas L. *Bioresource Technology,* 67: 73 – 82

Tanzania [Online] http://www.odci..gov/cia/publications/factbook/tz.html Accessed 6/7/2003

Thomas, A.U. (1996). Models of Renewable Energy Technology Transfer to Countries. *WREC*, Banjul, Gambia, 1104 – 1107

Wilkins, G. (2002). *Technology Transfer for Renewable Energy: Overcoming Barriers in Developing Countries,* London: Earth scan Publication

Young, P. 1994. *Scientific Social Survey and Research,* 4th Ed. New Delhi: Prentice of India

Abbreviations

TOE	Tonnes of Oil Equivalent
GEF	The Global Environment Facility
ARI- MONDULI	Alternative Resource Income for Monduli Women
HPI	Heifer
STEP	Strategic Technology Evaluation Program
IRR	Internal Rate of Return
FDI	Foreign Direct Investment
STEP	Strategic Technology Evaluation Programme
KAKUTE	Kampuni ya Kusambaza Tekinolojia
MERR	Meso Economic Rate of Return
ERR	Economic Rate of Return
TOE	Tones of Oil Equivalent

Appendix I: List of interviewees and personal communication

BURLAND, PETER. Owner of Kikuletwa Jatropha farm, conducts: 255 (0) 748 419211: Email; burland@supanet.com

DOHERTY MALCOLM. Director, D1 OILS Tanzania Limited, conducts: 255 22 2666476 or Cell: 255 744 535850: Email: dohertymd@intafrica.com

MANYANGA, LIVANUS. Managing director KAKUTE LtD and ARI MONDULI project coordinator, conduct: 255 27 2544549 or Cell: 255 744 662646: Email: Kakute@tz2000.com

MARIE, MENSINK, Project Manager, FAIDA-SEP, Arusha Tanzania, conducts: 255 (0) 27 2503549 or 255 (0) 360605: Email; pc@faida.or.tz website www.faida.or.tz

MATUNGWA, B. ADOLF. Field Project Officer – Monduli Site, UNDP/GEF – East African Cross boarders Biodiversity Project, conducts: 255 27 2538097 or cell: 255 744 300570: Email; adolfmatungwa@yahoo.co.uk : Website: x-borderbiodiversity.tripod.com

MJEMA, Media and Communication officer, Ministry of Agriculture

MWIHAVA, N.C.X. Assistant commissioner – Renewable energy, Ministry of Energy and Minerals, Tanzania, Conducts: 255 22 2119158 or 255 744 464036: Email; mwihava@mem.go.tz or nmwihava@hotmail.com

SABUNI, B.N.FRANSIS. National Technical Officer, UNDP/GEF – East African Cross boarders Biodiversity Project, conducts: 255 27 2508398 or cell: 255 744 275467: Email; fbnsabuni@yahoo.com : Website: x-borderbiodiversity.tripod.com

Dr. A. E. LYIMO. North East Zone HPI Coordinator and Deputy Director of HPI Tanzania

Appendix II: Basic data for financial analysis

Description	Unity	Bielenberg	Lister	Hatz
Interest rate (discounting rate)	% p.a.	7	7	7
Capacity in seed processing per year	tonnes	20	84	84
Price of seed	FCFA/kg	50	50	50
Price of fuel (produced oil)	FCFA/litre	0	210	210
Self-utilisation oil/seeds	litre/kg	0	70	70
Maintenance	FCFA/an	10.000	1.100.000	50.000
Variable costs	%	0	58	50
Personnel	FCFA/an	240.000	60.000	60.000
Variable costs	%	50	0	0
Use of the defined capacity				
Is equal to the sold products 1995	%	50	25	25
1996	%	100	50	50
1997	%	100	60	60
1998	%	100	70	70
1999	%	100	80	80
2000	%	0	90	90
From 2001	%	0	100	100

Extraction rate				
Jatropha oil, pure	%	20	20	20
Sediment	%	5	5	5
Oil cake	%	75	75	75
Batterie loading, max.	x/jour	0	2	2
Transform. factor oil: kg > liters	facteur	1,087	1,087	1,087
Selling price:				
Jatropha oil, pure	FCFA/litre	250	250	250
Sediment	FCFA/kg	75	75	75
Oil cake	FCFA/kg	15	15	15
Financement				
Equity capital	FCFA	150.000	180.000	200.000
Subsidy	mio FCFA	0,1	2,0	
Long term credit	mio FCFA			4,0
Interest rate	% p.a.			10,0
Short term credit	mio FCFA		0,2	0,1
Interest rate	% p.a.		17,0	17,0

Appendix III: STEP framework[104]

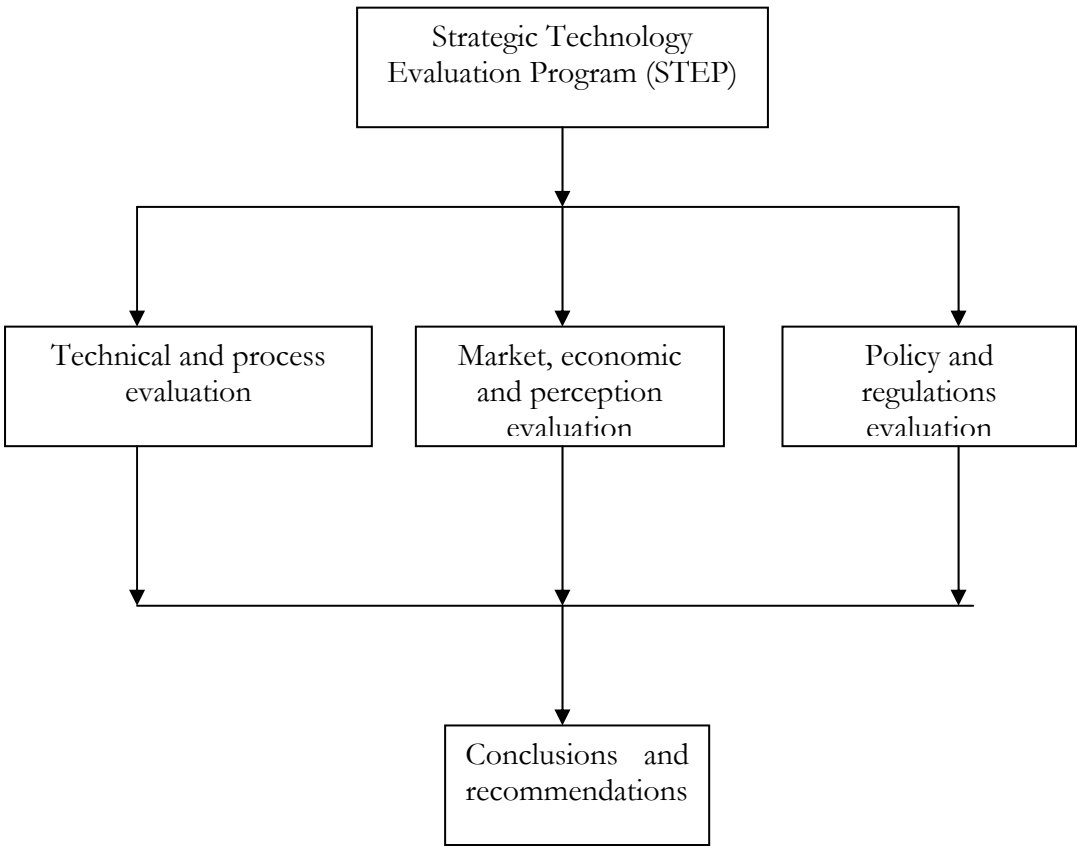

[104] Jain, R.K. *et al.* (2003). Evaluating the commercial potential of emerging technologies, *International Journal of Technology Transfer and Commercialisation,* Vol. 2 (1): 32-50

Appendix IV: Interview protocol

1. Technology Environment

What are the technology applications?

What are the technology specifications?

What are the technology requirements?

What are the advantages of the technology?

What are the potential disadvantages of the technology?

2. Market environment

What are the competing technologies?

How is the problem currently addressed?

What is technology's competitive advantage?

What is the size of the potential market? (if not exactly estimate)

What are the growth trends?

What is the current customer base?

What are the characteristics of the competitors?

Are there known technology champions? (If yes what would be the ways to involve them?)

What are the potential distribution channels?

What are the development costs required to get the technology in the market?

What are the relevant human factors of the technology? (If the technology adoption requires any behaviour change and if people want to use the technology)

What are the potential barriers to market?

What is the estimate development time?

3. Legal environment

What are the relevant regulations that guide Jatropha activities in Tanzania?

What are the trends in government regulations and policies regarding plant oil for energy purposes?

What are the known global trend and general industry overview in the area?