ISRN LUTMDN/TMHP—10/5202—SE
ISSN 0282-1990

Thermodynamic modelling of biomass based power production

Emil Bjäreborn, Fredrik Åkerman

Thesis for the Degree of Master of Science

Division of Thermal Power Engineering
Department of Energy Sciences
Faculty of Engineering, LTH
Lund University
P.O. Box 118
SE-221 00 Lund
Sweden

Abstract

With today's growing awareness of human caused climate changes there is a big interest to replace fossil fuels with renewable fuel sources, such as biomass fuels. For power production biomass are traditionally combusted in small scale facilities which uses a steam cycle. The electrical efficiencies for such facilities are relatively low. By gasifying the solid biomass to syngas it can be used for running a gas turbine. The gas turbine can then be combined with a steam cycle which could increase the electrical efficiency.

The purpose of this master thesis was to investigate the electrical efficiency of biomass integrated gasification combined cycle and compare this to current facilities using the Rankine-cycle. The work was carried out in two steps, the first step was a literature survey and the second step was to model an integrated gasification combined cycle plant.

The literature survey covered different gasification technologies, gas turbine operation, gas cleaning, fuel drying etc. Equilibrium modelling of the gasification process was also investigated in the literature survey. From the survey the concept of pressurized indirect gasification was chosen for the second part of the work. The models and simulations are made with the software IPSEpro, which is a simulation environment for energy engineering.

The air needed for the combustion chamber in gasifier was supplied from the gas turbine's compressor. The drained mass flow corresponded well to the increase in the fuel mass flow to the gas turbine. The mass flow through the turbines thereby was kept close to the design case. When fuel drying was integrated this lead to a reduction in the power output but the electrical efficiency increased. The increase is explained by the fact that the efficiency is calculated on the lower heating value of the fuel. The results for the electrical efficiencies were in the region of 45-50% which is higher than for conventional power plants using biofuels. However an integration of a gasification unit will create a very advanced system.

Finally the gasifier model was adjusted for atmospheric operation. This resulted in lowered electrical efficiencies compared to those of the pressurized configuration.

Acknowledgments

This master thesis was done during the fall and winter of 2009/2010 at the division of Thermal Power Engineering , Faculty of Engineering (LTH), Lund University. It is the final part of our education for the degree of Master of Science in mechanical engineering.

We would like to thank our supervisor Klas Jonshagen, Ph.D. student at the division of Thermal Power Engineering, for valuable advice regarding IPSEpro and combined cycles but also for the helpful discussions during the work. Jens Klingmann, associate professor at the division of Thermal Power Engineering, has also contributed with valuable help, especially regarding the theory behind the modelling of gasification.

Further on we would like to thank Matilda Lindroth and Björn Fredriksson Möller at E.ON for their contribution to this thesis in the form of helpful information and discussions.

Emil Bjäreborn & Fredrik Åkerman
Lund, January 2010.

Table of contents

Abstract iii
Acknowledgments iv
Nomenclature viii
1 Introduction 1
1.1 Purpose 1
1.2 Method 1
1.3 Delimitations 1
1.4 Outline 1
2 Gasification and integration 3
2.1 History of gasification 3
2.2 Introduction to gasification 3
2.3 Gasification techniques 5
2.3.1 Moving/fixed bed gasifiers 5
2.3.2 Fluidized Bed Gasifiers 6
2.3.3 Indirect gasification 9
2.4 Existing and planned gasification projects 12
2.5 Practical issues concerning gasification and integration 13
2.5.1 Gasification pressure and temperature 14
2.5.2 Gas turbine operation 14
2.5.3 Syngas cooling 15
2.5.4 Steam production 15
2.5.5 Pressurization of the fuel 16
2.6 Gas cleaning 17
2.6.1 Particulates 17
2.6.2 Alkali compounds 18
2.6.3 Tars 18
2.6.4 Nitrogen-containing components 19
2.6.5 Sulphur 19
2.7 Fuel and fuel handling 19
2.7.1 GROT 19
2.7.2 Wood chips 20
2.8 Drying of biomass 21
2.8.1 Natural drying 21
2.8.2 Flue gas drying 22
2.8.3 Steam drying 23
2.9 Other applications 24

2.9.1 Substitute natural gas 24
2.9.2 Synthetic fuels and chemicals 25
2.10 Rankine cycle 27
3 Theory of equilibrium modelling 28
3.1 Assumptions 28
3.2 Reactions 28
3.3 Energy balance 30
3.4 Mass balance 30
4 Modelling 31
4.1 IPSEpro 31
4.2 Gasifier model 32
4.2.1 Atmospheric gasifier 33
4.3 Gas turbine 33
4.4 Steam cycle 34
4.5 Other components 36
4.5.1 Steam dryer 36
5 Biomass integrated gasification combined cycle 37
5.1 Operation parameters 38
5.2 Configuration A: 38
5.3 Configuration B: 38
5.4 Configuration C: 38
5.5 BIGCC-plant with integrated fuel drying 39
5.5.1 Integrated fuel drying, alternative 1 39
5.5.2 Integrated fuel drying, alternative 2 39
5.6 Atmospheric BIGCC 40
6 Results 41
6.1 Gasifier model 41
6.1.1 Atmospheric gasifier 44
6.2 Results for configuration A 45
6.3 Results for configuration B 45
6.4 Results for configuration C 45
6.5 Parametric study for configuration A 45
6.5.1 Hot gas filter inlet temperature 45
6.5.2 Gasification steam temperature 46
6.5.3 Steam cycle parameters 47
6.6 Results for the BIGCC-plant with integrated fuel drying 48
6.7 Atmospheric BIGCC 48
7 Discussion 49

7.1 Gasifier model 49
7.1.1 Atmospheric gasifier 50
7.2 Gas turbine performance 50
7.3 Evaluation of configuration A-C 51
7.4 Influence of different operational parameters 52
7.4.1 Effects of different hot gas filter temperature 52
7.4.2 Effects of the gasification steam temperature 53
7.4.3 Effects of steam cycle parameters 53
7.5 BIGCC with integrated fuel drying 53
7.5.1 Integrated fuel drying, alternative 1 54
7.5.2 Integrated fuel drying, alternative 2 56
7.5.3 General discussion concerning integrated drying 57
7.6 Atmospheric BIGCC 58
8 Conclusions 60
9 Bibliography 62
Appendix A: Equilibrium constants 64
Appendix B: Flow charts for the different BIGCC-configurations 65

Nomenclature

c_p	specific heat capacity, J/(kg·K)
E	power output, MW
ΔG^0	Gibbs free energy change, J/mole
$\Delta G^0_{f,T}$	Gibbs standard free energy change at temperature T, J/mole
H	enthalpy, J/kg
$\Delta H^0_{f,298}$	heat of formation at 298 K, kJ/mole
K_p	equilibrium constant, -
$\dot{m}$	mass flow, kg/s
n	number of moles, mole
p	pressure, Pa
p_0	reference pressure, 1.013 kPa
Q	heat output or heat loss, MW
R	universal gas constant, 8.314 J/(mole·K)
T	temperature, K
W	fuel input, MW
X	molar fractions, -
Y	mass fractions, -
η	efficiency, %

Abbreviations

BFB	Bubbling Fluidized Bed
BIGCC	Biomass Integrated Gasification Combined Cycle
CFB	Circulating Fluidized Bed
CGE	Cold Gas Efficiency, %
CHP	Combined Heat and Power
COT	Combustor Outlet Temperature
DFB	Dual Fluidized Bed
DME	Di-Methyl Ether
GROT	GRenar Och Toppar (Swedish)
HHV	Higher Heating Value, MJ/kg
HRSG	Heat Recovery Steam Generator
IGCC	Integrated Gasification Combined Cycle
LCV	Low Calorific Value, MJ/Nm^3
LHV	Lower Heating Value, MJ/kg
MCV	Medium Calorific Value, MJ/Nm^3
MFV	Minimum Fluidizing Velocity
ORC	Organic Rankine Cycle
RDF	Refuse-Derived Fuels
SCR	Selective Catalytic Reduction
SNG	Substitute Natural Gas
TIT	Turbine Inlet Temperature

Chemical

C	Carbon	H_2S	Hydrogen sulphide
CH_4	Methane	N_2	Nitrogen
CO	Carbon monoxide	NH_3	Ammonia
CO_2	Carbon dioxide	NO_x	Nitrogen oxide
H_2	Hydrogen	H_2O	Water

1 Introduction

Today's growing awareness of human caused climate changes leads to interest in ways of producing electricity without creating a negative impact on the environment. One way to produce energy without adding to the global warming is by the use of bio-fuels. With a growing demand of electricity the available biomass must be used in the most efficient way.

1.1 Purpose

The purpose of this thesis is to investigate the possibilities of a biomass gasification integrated combined cycle (BIGCC) power plant. The main purpose is to compare the electrical efficiencies of a conventional bio-fuelled power plant with a BIGCC-plant. Different types of integration will be developed and compared to each other. Also practical issues regarding gasification are discussed.

1.2 Method

The first step of the project was a literature survey. This survey comprised different types of gasification technologies, existing plants today, and practical issues regarding gasification such as gas cleaning, fuel drying and gas turbine modifications. From the literature survey a gasification technology was chosen. The literature survey also contained the theory of equilibrium modelling of a gasification process.

The second part of the study involved the development of a gasifier model and the integration with a combined cycle. This was done with the help of IPSEpro, a commercially available program used for modelling and analyzing processes in energy engineering. In IPSEpro a gasifier model was developed and integrated with a combined cycle.

1.3 Delimitations

There are several types of gasification technologies available today. Because of the time aspect only one of them has been studied. The gasifier model is limited to an equilibrium model even though equilibrium may not be achieved in the real process. The model of the gas turbine is created with components already available from IPSEpro. This means that the gas turbine model will not consider any changes in the type of fuel. The isentropic efficiencies for the compressor and the turbines are assumed to be constant. Neither will a change in mass flow be considered in terms of changed pressure ratios etc. No economic calculations are made in this thesis. The different solutions are only evaluated from a thermodynamic perspective.

1.4 Outline

Chapter 2 is a summary of the literature survey which gives a basic description regarding different types of gasification processes, practical issues concerning the integration, gas cleaning, existing plants, fuels, biomass drying and other applications for gasification. Some examples of different bio-fuelled power plants and their electrical efficiencies are also given so that the comparison to the BIGCC can be made.

Chapter 3 is a description of the theory behind an equilibrium model and the assumptions made during the modelling.

Chapter 4 describes how the different components in the BIGCC-plant are modelled and the assumptions that are made.

In chapter 5 the different configurations of the BIGCC-plants that were developed are described.

Chapter 6 is the result chapter were the results obtained from the different concepts are presented.

In chapter 7 the results from chapter 6 are discussed. Here the different solutions advantages and disadvantages are compared and evaluated.

Chapter 8 is the conclusion chapter were the conclusions made from this work are listed.

Chapter 9 is the reference chapter.

In the appendices the calculated equilibrium constants and the flow sheets of the different configurations are attached.

2 Gasification and integration

2.1 History of gasification

The term gasification applies for the conversion of different carbon based fuels into a gaseous product with a useable heating value. Thus combustion cannot be regarded as gasification since the product gas lacks heating value. The technologies of pyrolysis, partial oxidation and hydrogenation are included in gasification. Therefore the different techniques for gasification are varying and much dependent on the source of fuel and the desired product.

The first commercial use of gasification started with the foundation of the London Gas, Light and Coke Company in 1812. Town gas was produced through pyrolysis of coal or by the water gas process, where coke was converted into a mixture of hydrogen and carbon monoxide. The town gas was first used for illuminating and later on also for space heating. But the use of town gas for lighting became unnecessary when the light bulb was introduced in the early 1900s. Later on cheaper natural gas made the use of town gas for space heating redundant. Still, the technology of gasification was useful for producing a raw material for synthesis of e.g. ammonia or methanol.

In the 1920s with the commercial introduction of the cryogenic air separator many of the predecessors to today's units were developed, the Winkler fluid bed process (1926), the Lurgi moving bed pressurized gasification process (1931) and the Koppers-Totzek entrained flow process (1940s). In the 1970s, with the first oil crisis, a renewed interest in the gasification technology took place. Great investments in coal gasification took place, most of them with the aim of hydrogenating coal directly to methane as a substitute natural gas (SNG). However most of these investments never reached beyond the demonstration stadium and with lowered oil prices in the 1980s the development of gasification once again stagnated.

As the energy prices once again started to rise in the early 2000s the possibilities of gasification once again raised interest. Much of this interest has been directed towards the gasification of coal, for instance to produce synthesis gas to be burned in a gas turbine. The acceptance for coal from an environmental perspective is although not very high, especially with the growing awareness of human caused climate changes. A climate neutral alternative is to gasify biomass, which offers opportunities similar to those given by coal gasification [1].

2.2 Introduction to gasification

The main steps of the gasification process can be schematically described by figure 2-1 below.

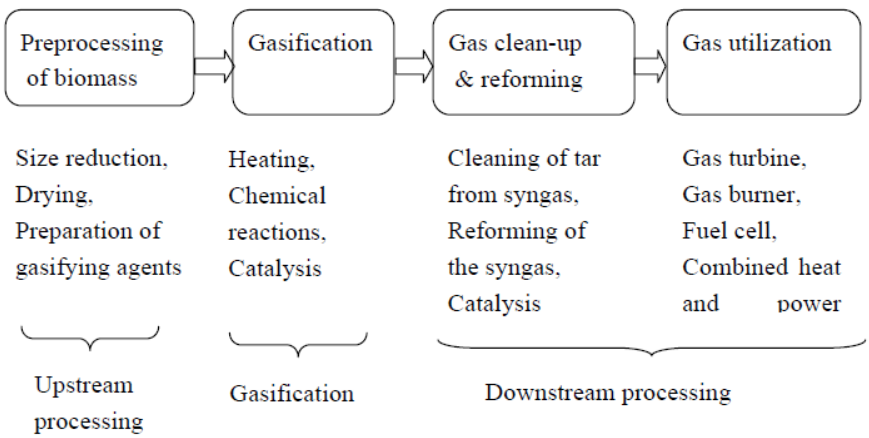

Figure 2-1. The principal steps of gasification [2].

By refining the solid biomass into a gaseous form several options for further utilization of the gas appears:

- Using the gas as a fuel in gas turbines or gas engines.
- Creating synthetic diesel via the Fischer-Tropsch-process.
- Methanation to create Substitute Natural Gas (SNG)
- Creating a hydrogen rich gas.
- Chemical production, e.g. ammonia and ethanol.

Gasification occurs in a high temperature environment in the presence of an oxidation agent. Typical oxidation agents are air, steam, oxygen or a combination of these. Heat is added to the process either direct or indirect. The combination of heat and an oxidizer makes the large polymeric molecules of which the biomass consist to decompose into lighter molecules and finally into permanent gases. The product gas, or syngas, consists mainly of carbon monoxide (CO), hydrogen (H_2), methane (CH_4) and carbon dioxide (CO_2). The syngas will also contain tar, char and other minor contaminations [2]. The composition of the product gas is dependent on several different factors such as, gasification temperature, oxidation agent, reactor type and biomass feedstock. Gasification can occur with many varying types of solid biomass feedstock, e.g. wood chips, bark, paper mill sludge, pelletized refuse-derived fuel (RDF) and straw. The choice of oxidizing agent strongly influences the lower heating value (LHV) of the produced gas. If air is chosen as oxidizing agent it will result in a low calorific value (LCV) gas (4-7 MJ/Nm^3). Oxygen or steam as oxidizer leads to a medium calorific value (MCV) gas (10-20 MJ/Nm^3). The later one is more appropriate as a feedstock for e.g. synthesis of liquid fuels and chemicals while the previous is more suitable where the heat content is not critical, for example in large boiler systems [3].

Instead of burning the produced gas in a conventional boiler it can be burned in a gas turbine which gives the possibility of combining it with a steam cycle. This would enable utilization of the thermal energy in the product gas and thus improving overall efficiency. Recent work has shown that operation of gas turbines with a gaseous fuel with a LHV of somewhat above 20 MJ/kg cause no major stability issues. However if gas with a lower heating value is used problems with a decreased surge margin can appear [4]. To avoid this, modifications on the gas turbines have to be carried out in order to maintain functionality of the unit. Such modifications will be discussed further on.

To be able to evaluate the performance of biomass gasification integrated in a combined cycle the efficiency of both the plant and the gasification process has to be evaluated. The total efficiency of a combined cycle with district heating is the plant's total output, both power and heat, compared to the total fuel input:

$$\eta_{tot} = \frac{E + Q}{W} \tag{1.1}$$

The electrical efficiency is the plant's total power output compared to the total fuel input:

$$\eta_{el} = \frac{E}{W} \tag{1.2}$$

Also the efficiency of the gasification process has to be evaluated somehow. Highman and van der Burgt [1] give two possible efficiencies, the cold gas efficiency (CGE) and the carbon conversion, the definitions are:

$$\text{CGE} = \frac{\text{Energy flow in syngas (MW)}}{\text{Energy flow in feedstock (MW)}} = \frac{(\dot{m} \cdot LHV)_{syngas}}{(\dot{m} \cdot LHV)_{feedstock}} \tag{1.3}$$

The clarification of which of the heating values, the low or the high heating value, that is used is important. It should also be noticed that the CGE doesn't take into account the sensible heat in the syngas. The carbon conversion is defined as:

$$\text{Carbon conversion} = 1 - \frac{\text{Carbon in gasification residue [kmol/h]}}{\text{Carbon in feedstock [kmol/h]}} \tag{1.4}$$

However care has to be taken when using both of these definitions of efficiency since they only leave limited information about the process efficiency and the gas quality. For instance a process which produces a gas with high methane content will have a high CGE. The high methane content makes the gas suitable for power applications but it will not be suitable for synthesis to ammonia [1].

2.3 Gasification techniques

There is many different kind of technologies for gasification. The gasification process can for example be either direct or indirect. In this section some of the most common gasification technologies are described.

2.3.1 Moving/fixed bed gasifiers

This type of gasification has been used for a long time and the technology is quite simple and robust. The bed is fixed in a compartment due to that the gasification fuel needs to be feed and the ash/char retrieved; the bed "moves". The size of the gasifier is limited due to problems with achieving a homogenous bed. For a big gasifier the syngas quality and the amount of tar in the gas will vary due to large variations in temperature along the bed. Advantages with the moving bed are that it's simple, robust and that is cheap to produce the gas. Disadvantages are the upscale limit, no real process control and varying gas quality [5].

Downdraft gasifier

The fuel is fed from the top of the gasification compartment and the gasifying medium is introduced from the side into a downward flowing packed bed. The principle of operation for the downdraft gasifier is shown in figure 2-2. The gasifier has distinct drying, pyrolysis, oxidation and reduction zones. The syngas has a low heating value due to the large amount of energy that is converted to heat. Ash and syngas leaves the gasifier at the bottom through a grid where they are separated from the fuel. Theoretically the product gas is supposed to have a low content of tar because of thermal cracking in the high temperature zone. This does not have to be the case in a real process due to cold spots in the combustion zone which comes from fluctuations in the fuel [5].

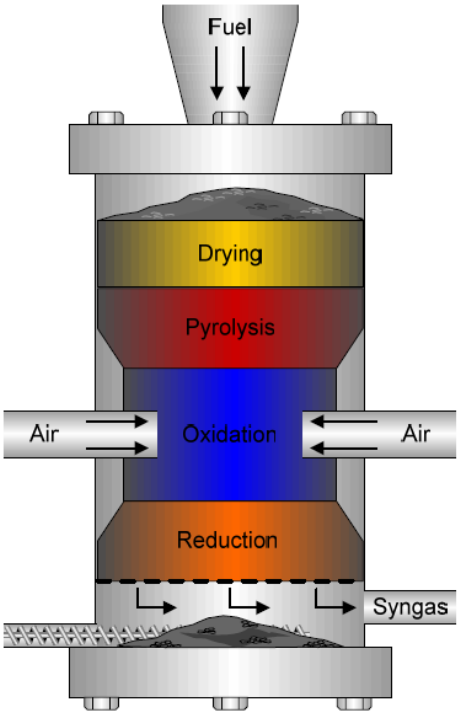

Figure 2-2. The principal operation of a downdraft gasifying process [5].

Advantages:
The downdraft gasifier has a simple construction and is relative cheap to build. Low tar content means little need for tar cleanup. No cyclone is needed for char and ash separation due to the ash and char removal in the bottom of the gasifier. The syngas quality is good for such a simple process [5].

Disadvantages:
This gasifier gives a high CO_2 content in the syngas which means low heating value due to combustion of biomass in the process. Only small changes in fuel composition, particle size and moisture content are allowed. Otherwise cold spots may occur in the gasifier which will lead to higher tar content in the syngas. There is a risk of agglomeration in the gasifier and clogging of the grid. It's impossible to optimize the gasifier because of the complexity of the inhomogeneous gasification process [5].

2.3.2 Fluidized Bed Gasifiers
Fluidized beds have a moving bed of inert material. The most normal bed material is quartz sand with a size distribution around 250 µm. Other active materials may be used such as dolomite or blast furnace slag if it can be supplied in large enough amounts. The sand/bed-material enhances the heat transfer to the fuel particles and increases the mixing and kinetics, this will give an upswing in gasification efficiency and fuel throughput. The risk for bed agglomeration when biomass fuels are used makes it very important to exchange the bed material with proper intervals [5].

Air, oxygen, steam or a mixture of these can be used as fluidization agent where air is the most common agent. The primary air speed must minimum be equal to the minimum fluidizing velocity (MFV) if it's lower the sand will not bubble. The MFV is when the pressure drop over the sand bed is equal to the pressure the bed makes on the bottom of the reactor. If the velocity is the same as the MFV the sand bed begins to flout and bubble, this is called a bubbling fluidized bed (BFB).

When the velocity is further increased the bubbles will burst at the surface of the bed. If the velocity is increased furthermore the sand- and furnace particles will follow the gas stream up through the reactor and in to a cyclone where they are separated from the gas. The gas leaves at the top and the particles are lead back down to the sand bed. This is called a circulating fluidized bed (CFB) [5].

There is a high risk for agglomeration due to ash forming in this type of gasifiers. The ash that is formed becomes sticky even at low temperatures and sticks to the sand. If nothing is done the agglomeration will accelerate and cause the bed to defluidize. The agglomerated bed can form a glass surface on the grid which usually is very hard to get rid of. To prevent this from happening the bed material has to be changed in close enough intervals or an additive has to be added to stop the agglomeration. The agglomeration is very temperature dependent and the agglomeration temperature for a fuel is near the melting point for the ash. This is why high alkali content in the fuel decreases the agglomeration temperature due to its lower melting point and increases the risk for defluidization. Changing the bed-material or adding an additive will increase the total cost of the gas production [5].

Bubbling Fluidized Bed (BFB) gasifier

Figure 2-3 shows the concept of a BFB-gasifier. The fuel and additional sand is feed into the sand bed from the side of the gasifier. The gasification agent is inserted from the bottom with a velocity of 2-3 m/s to create bubbles up through the bed. The velocity of the fluidization agent is of great importance for the size and the speed of the bubbles and the heat transfer between the fuel and sand particles. The syngas leaves the gasifier at the top of the cyclone where sand and ash particles are separated from the syngas. Fluidization agent can be air, oxygen, steam or a mix of these. The fuel is mostly wood pellets and wood chips with different size and amount of moisture [5].

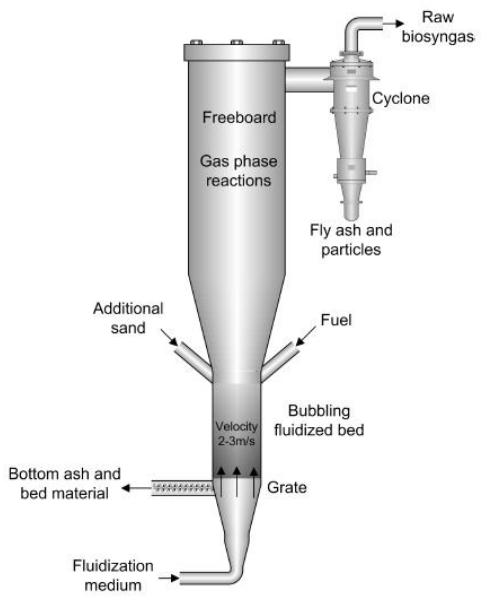

Figure 2-3. Schematic description of a BFB gasifier [5].

Advantages:

This kind of gasifier has higher throughput than fixed beds. It allows good mixing, optimized kinetics, good particle/gas contact and heat transfer. All this leads to high carbon conversion rates and consequently high yields. The tar content is quite low. It is possible to use in-bed catalytic processing due to the use of bed material. The BFB gasifier works with different particle size, fluctuations in feed quantity and water content in the fuel. With intelligent fuel mixing the BFB gasifier may allow higher temperatures, around 900-950°C. This temperature increase gives a decrease of tar in the syngas [5].

Disadvantages:

- High particle content in the syngas.
- Advanced technology, especially when pressurized.
- Agglomeration risk for biomass fuels.
- Large bubbles can lead to gas bypass through the bed [5].

Circulating Fluidized Bed (CFB) gasifier

Fuel is feed into a sand bed and the gasification medium enters from the bottom with a velocity of 5-10 m/s, enough to get the fuel and sand particles to the top of the reactor, shown in figure 2-4. Some of the particles will follow the syngas to the cyclone where the syngas is separated from the particles, mainly consisting of char and sand. The syngas leaves the cyclone from the top. The char and sand is then recycled to the bed material. Typical fuels that are used are wood pellet and wood chips. Operation temperature and pressure is somewhere around 800-1000°C and 1-19 bar respectively [5].

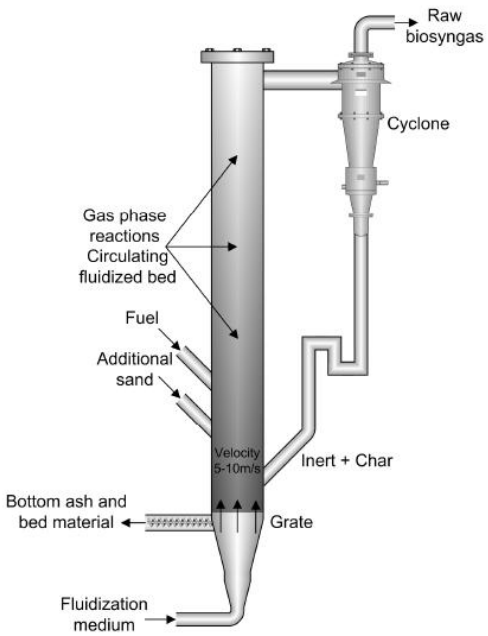

Figure 2-4. A typical Circulating Fluidized Bed Gasifier [5].

Advantages:

Isothermal conditions, good mixing, optimized kinetics, good particle/gas contact and heat transfer as well as long residence time gives high carbon conversion rates and consequently high yields. The CFB gasifier gives higher quality of syngas than a BFB gasifier and allows an even higher fuel throughput than BFB gasifiers and fixed beds. It produces medium levels of tar content. The bed material can be chosen so that it also functions as a catalyst for reducing tars. The CFB gasifier is also tolerant to particle size and moisture content in the fuel. It is suitable for large scale, fuel capacities over 10 MW_{th} and overall a very fuel flexible technique [5].

Disadvantages:

This process gives many particles in the syngas. It is an advanced technology which becomes even more advanced when pressurized. Bed may agglomerate when using biomass. Intelligent fuel mixing may be needed for safe operation at higher temperatures around 900-950°C. Too big particles require high transport speed which can cause equipment erosion. Temperature gradients can occur in the direction of the flow of bed material [5].

2.3.3 Indirect gasification

Indirect gasification means that the feedstock is not used for combustion in the gasifier to yield heat. If the heat supply is done without partial combustion there is no need for a steady supply of oxygen. Instead steam can be used to transfer heat from an external heat source to the feedstock. Steam as the gasification agent creates an oxygen-free environment with very low levels of nitrogen. This will lead to lower fixed nitrogen as well as a product gas with higher energy content. The big challenge with indirect gasification is that the net reaction always is endothermic, so additional heat is required in some way. There are some different ways to accomplish this; one way is by combusting a part of the fuel by adding air or oxygen in the amount that is required. The gasification agent will now be a mixture of steam and air/oxygen (direct gasification). Another way is to superheat the steam and/or supply more steam to the gasifier. A third way is heating of the bed-region externally for example by heat pipes, heat exchangers or by a separate combustion process that heats the sand-bed or ball-bed directly and then re-injecting the bed material into the gasification process [5].

Most of the time indirect gasification gives higher heating values for the dry synthesis gas than gasification with oxygen because of an increase of methane in the gas. The methane content increases dramatically when using steam instead of air/oxygen especially at low temperatures, 800-900°C, and high pressures, 20-60 bar. This is indicated in both reports and chemical equilibrium calculations. The increase in methane is desired if the syngas is going to be used for power generation with a gas turbine but not if it is used as a fuel catalyst where a methane reformer or other techniques has to be used to decrease the amount of methane [5].

Indirect single stage gasification with steam reforming

The single stage indirect gasifier works as a bubbling fluidized bed except that it has a burner that produces heat from a small portion of the product gas to gasify the feedstock. Steam blowing gives heat transportation through the bed to the fuel. Fuel type varies from wood pellets and woodchips of different size and moisture content to black liquor [5]. Figure 2-5 shows the schematics the gasifier.

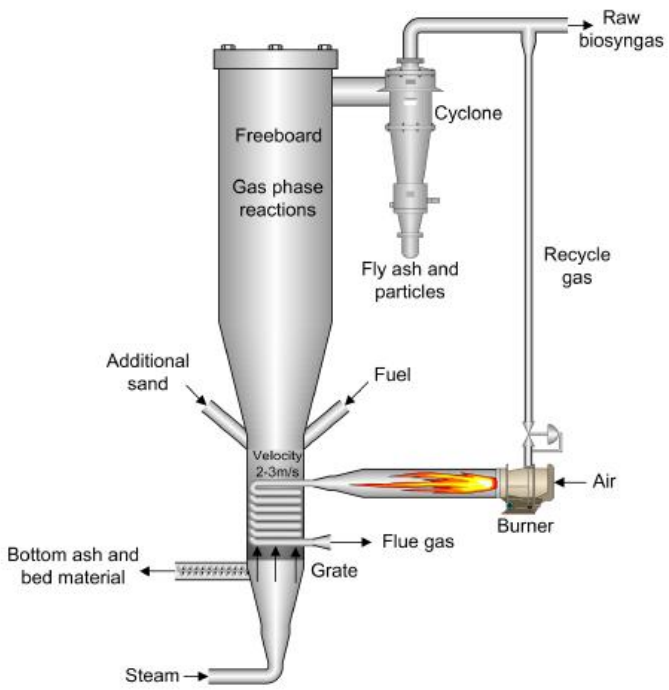

Figure 2-5. A indirect single stage gasifier with steam reforming [5].

Advantages:
The gasification agent is steam so there are very low levels of nitrogen present. This also gives the produced gas higher energy content due to the lower nitrogen fixation. The gasifier has a high rate of throughput and if the technical challenges are overcome, it's potentially one of the most economical gasification systems for large scale biomass power or fuel production [5].

Disadvantages:
- Complicated construction.
- High-temperature operation can cause material issues.
- Risk of ash problems.
- Large feeds of black liquor require a complex design.
- More appropriate for large scale.

Char Indirect, Two-Stage with Steam Reforming
This system consists of two connected circulating fluidized bed, see figure 2-6. One of the beds uses steam as the fluidizing medium; this is the one which acts as the gasifier and produces the syngas. The char and sand particles are separated from the syngas in a cyclone and are then feed to the other bed which employs air as fluidizing medium. Here the char is combusted and the heat is transferred back to the first bed via the sand after separation from the flue gas in a second cyclone. The heat from the sand provides the needed amount of heat to gasify the fuel [5].

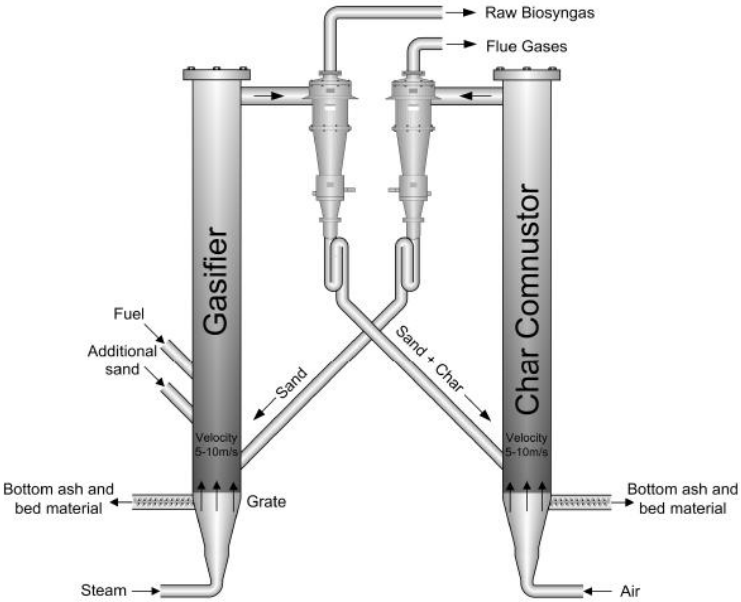

Figure 2-6. A char indirect, two-stage gasifier with steam reforming [5].

Advantages:
- Low levels of nitrogen in the syngas due to the use of steam as oxidizing agent.
- A high throughput of fuel is possible.
- Good heat exchange due to twin fluidized bed.
- Interesting for scale up when used with gas clean up and heat recovery.

Disadvantages:
- Large scale applications.
- Complex construction.
- High investment cost.

Dual fluidized bed (DFB) steam gasification

The dual fluidized bed technology was developed at Vienna University of Technology. The system works as a bubbling fluidized bed connected to a circulating fluidized bed where the BFB act as the gasifier and the CFB as a combustor to keep a high temperature on the bed material, figure 2-7 below show the principle of operation. When using steam as an agent there is no partially oxidation of the fuel which leads to the need of an external heat source. The air blown CFB gasifier combust the residual char coming with the bed material and additional fuel to generate enough amounts of heat. After gas-solid separation the bed material is transported back to the gasification chamber. In the steam blown bubbling fluidized bed the gasification process of drying, degasification, steam reforming of degasification products and partially heterogeneous char gasification takes place at a temperature of 850-900°C. The process gives a medium calorific product gas (12-14 MJ/Nm^3) stream as well as a flue gas stream. The biomass that serves as fuel is exclusively wood. This process is used in Güssing and Oberwart, Austria, see section 2.4 [6].

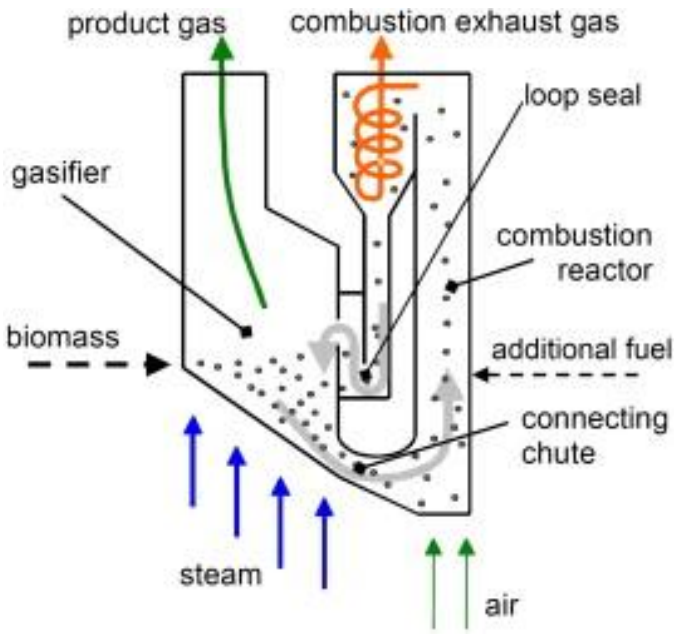

Figure 2-7. The DFB scheme [6].

Advantages:

The syngas has very low levels of nitrogen due to the use of steam in the gasifier. There is also no need for a steady supply of oxygen. Air is only supplied in the combustor and separated in the cyclone as flue gas. This gasification system also has high throughput and the absence of nitrogen lowers the nitrogen fixation which gives a product gas with higher energy content. Good heat exchange by using a twin fluidized bed. This process is one of the most interesting gasification systems for large scale biomass power or fuel generation if it's combined with gas cleanup and heat recovery.

Disadvantages:

- Large scale applications.
- Complex construction
- High investment cost.

2.4 Existing and planned gasification projects

There are some different plants based on various kinds of gasification technologies operating today. For example indirect gasification and air-blown gasification are technologies that have been implemented.

The world's first biomass integrated gasification combined cycle (BIGCC) power plant was built by Sydkraft in Värnamo, Sweden. The facility operated between 1993 and 1999, primary with wood as fuel. The purpose of the project was to demonstrate a complete integration of a gasification facility and a combined cycle power plant. The plant in Värnamo provided 6 MW of electricity and 9 MW heat to the district heating system, from a total fuel input equivalent to 18 MW. In the seven years the project was running the gasification part operated for 8500 h and for 3600 h as a fully integrated system. The plant was able to run on different kinds of wood fuel and straws [7].

The gasifier type used at the Värnamo plant was a circulating fluidized bed (CFB) and consisted of a gasifier, a cyclone and a cyclone return leg. The gasifier used about 10% of the air from the gas turbines compressor for the fluidized bed. Before the air entered the gasifier it was further compressed in a booster compressor. The re-circulated solids were burnt at the bottom of the gasifier to keep the required temperature. The temperature in the gasifier was 950-1000°C and the pressure approximately 18 bar. The electricity efficiency was 32% and the total efficiency 83%, both calculated on the lower heating value of the fuel. The gas quality was as expected for the heating value but the hydrogen content was slightly lower than expected. The methane content compensated for the lower amount of hydrogen [7].

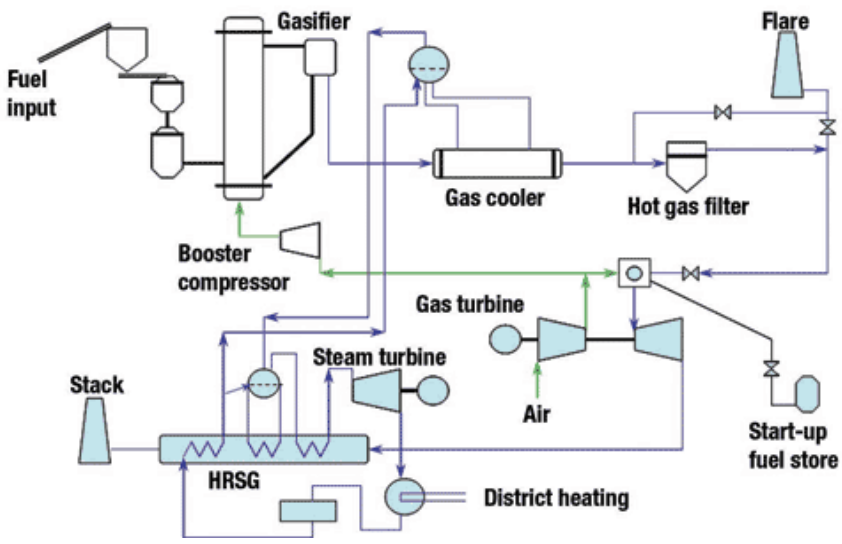

Figure 2-8. Flow chart of the Värnamo BIGCC-plant [8].

The future plans for the BIGCC-plant in Värnamo are to use RDF and other waste fuels, for example waste tires. Production of clean hydrogen rich synthesis gas is another planed project. The pilot plant will also be rebuilt to incorporate production of alternative motor fuels [7].

The research and design semi-industrial plant in Güssing, Austria, built in 2002, has been a pre-model for the commercial sized indirect gasification CHP-plant located in Oberwart built 2007. The Güssing plant has a thermal power of 8 MW with combined heat and power. The Oberwart plant uses the same type of steam blown dual fluidized bed technology as in Güssing. However there are some major differences between Güssing and Oberwart. Oberwart has an integrated biomass drying system that feeds the gasifier with biomass which now has the desired constant amount of water. In Oberwart there is a different strategy of controlling the gasification temperature in order to maximize utilization of the product gas. To get maximum electricity the residual heat from the gasification process is converted to electricity by using an Organic Rankine Cycle (ORC).For power generation two Jenbacher J-612 gas engines are used, each of them delivering about 1150 kW_{el} and 650 kW_{th}. The Jenbacher J-612 is a twelve cylinder engine. The estimated electrical efficiencies for the CHP-plant in Oberwart are 32%. The thermal power input is 8.5 MW_{th} [9].

Carbona is planning to build a BIGCC-plant in Andhra Pradesh, India which is scheduled for commissioning in October 2011 [10]. The technology used for this project is pressurized fluidized bed gasification. The plant is going to use biomass wood from nearby plantations for fuel, for example wood chips. The fuel moisture content before the gasifier is about 20 wt-% with a lower heating value of 17.5 MJ/kg for the dry fuel. The gasifier will be feed with 210 ton biomass per day. The power from the gas turbine and steam turbine is 9.5 MW and 4.0 MW respectively and the net power is 12.5 MW. The estimated net electric efficiency is around 37% [11].

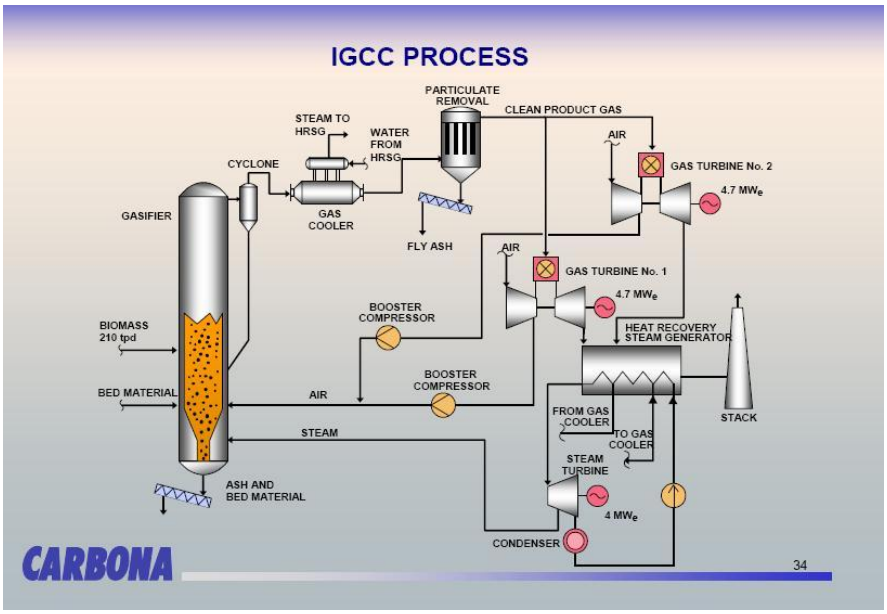

Figure 2-9. The Andhra Pradesh IGCC process [11].

2.5 Practical issues concerning gasification and integration

As previously discussed an integration of the gasification process with a combined cycle could enable a high efficiency. There are however some factors that has to be evaluated in order to have a well functioning system.

- Operational parameters for the gasification process.
- Gas turbine operation on a LCV-fuel.
- Syngas cooling and steam production.

2.5.1 Gasification pressure and temperature

The choice of gasification pressure is mainly determined by the downstream application. So if the produced gas is to be used in a combined cycle the gasifier pressure can be chosen to match the pressure required for supplying the fuel to the gas turbine. A slightly higher operational pressure should be chosen to overcome pressure drops between the gasifier and the gas turbine [1].

The temperature of the gasification process is determined depending on the properties of the ash. The temperature cannot exceed that of the ash melting temperature for fluid-bed gasifiers. This is because ash-melting will give agglomeration problems [1].

2.5.2 Gas turbine operation

One of the major issues with a BIGCC-plant is the use of a LCV gas in a gas turbine designed for a fuel with a high heating value, such as natural gas. If a fuel with a low heating value is used more fuel has to be supplied to the combustion system in order to maintain the combustor outlet temperature (COT). This leads to difficulties such as admitting the fuel to the burners, velocities, mixing and flame anchoring. Since the fuel flow is increased to ensure the designed COT the total mass flow through the turbine will increase as a consequence. For a single shaft machine Orbay et al. [4] show that if the mass flow through the turbine is increased the pressure ratio of the machine is raised. If the pressure ratio becomes higher the surge margin of the compressor will decrease. Surge is a condition which involves reverse flow through the compressor and can damage the machine severely. Several studies have been conducted on possible strategies for coming to terms with the problem of decreased surge margin. Some of these strategies are listed below [12, 13]:

- The pressure ratio increase is accepted.
  The compressor will operate at a higher pressure ratio which leads to a reduction of air mass flow.
  -Advantages
  If no retrofitting of the gas turbine is to be made this is the option that gives maximum power and efficiency for an atmospheric gasifier.
  -Disadvantages
  This is a very aggressive option because of the decreased surge margin but also the increased thermal loads and torque.
- De-rating
  The gas turbine firing temperature is decreased.
  -Advantages
  It is the simplest strategy since it involves no retrofitting. Also the reliability of the gas turbine will increase.
  -Disadvantages
  This will give serious negative effects on the gas turbines efficiency and power production.
- Compressor bleed
  Air is bled from the compressor discharge.
  -Advantages
  Gives small effect on the power production and enables return to natural gas as a fuel.
  -Disadvantages
  Might affect the distribution of air to the combustors and cause frictional losses.
- Redesign of the expander inlet nozzle
  The inlet nozzle of the expander is modified to the new mass flow.
  -Advantages
  Gives the best performance of the gas turbine.
  -Disadvantages
  A permanent modification and also the most expensive.

The BIGCC plant at Värnamo, Sweden used a Typhoon from ABB Alstom Gas Turbines. Modification of the combustors and the burners were done prior to operation. The strategy adopted to handle the decrease in surge margin was that of air bleed from the compressor. About 10% of the air was extracted from the compressor. Evaluation of the gas turbine performance has concluded that it has been able to operate under stable conditions [7].

2.5.3 Syngas cooling

The temperature level for many biomass gasification processes is in the region of 800-900°C [1]. Since the gas contains different contaminants it has to be cleaned before the gas can be used as a fuel in a gas turbine. The different contaminants and approaches on removal of them are discussed in section 2.6. The key issue is that all of these cleaning processes, even so called hot gas clean up, will require temperatures far below those of the gasification process, therefore demanding gas cooling. Gas cooling is also a way to make use of the sensible heat in the produced gas, for example by producing steam. The most common types of gas cooler used in gasification systems are conventional convection cooler, either the fire-tube boiler design or the water-tube boiler design, with water/steam as cooling agent.

The fire-tube boiler is less expensive than the water-tube boiler but have some restrictions when it comes to high-pressure steam. Since the steam pressure is almost always higher than the gas pressure, the tubes, through which the hot gas passes, will be exposed to an external pressure. This will limit the maximum steam pressure for the fire-tube boiler and depending on the design the maximum steam pressures will be in the region of 100-150 bar. The flow of the hot gas in the fire-tube boiler will be well defined because of the gas passing through the tubes. However the inlet has to be designed taking into account that particulates is still present in the stream and may cause erosion. Also the inlet has to withstand very high heat fluxes since there is a lack of cooling in this region. Water-tube boilers will have a gas flow around the tubes that can be uneven, local areas with very low gas flow velocities can cause particulate accumulation [1].

Fouling of the heat exchanging surfaces is undesirable because it will lead to decreased heat transfer rates. This can eventually lead to too high temperatures of the gas passing to downstream applications ultimately damaging this equipment. Even if well defined flows are ensured particulate accumulation cannot be completely avoided. Therefore regular clean up of the heat exchanger may have to be performed. The Wabash IGCC-plant in the United States uses a fire-tube boiler for gas cooling. They reported that scheduled removal of deposits in the boiler tube was required. The cleaning was performed with a drilling technique which was used to bore out the tubes [14].

2.5.4 Steam production

Typical figures for a syngas cooler are about 900°C to 300°C when cooling the syngas. These temperature ranges are very suitable for producing steam of high quality. This steam can then be used in either the Rankine cycle or for the gasification process, if steam-blown gasification is employed. Integration of the steam production from the gas cooling with the heat recovery steam generator (HRSG) could increase the power production of the steam cycle. If the gas cooler can help produce saturated steam more energy is supplied to the steam cycle. Thereby the overall efficiency can be improved since the power output from the steam cycle can be increased [1].

To use the gas cooler as an evaporator in the overall steam system is a strategy used for several different plants. The BIGCC at Värnamo uses its gas cooler, which is of fire-tube design, as one out of two evaporators. Part of the steam is also evaporated in the HRSG. The same principle idea is applied at the Wabash IGCC-plant. A difference is that were the Värnamo-plant uses a single-pressure cycle the Wabash-plant uses a triple-cycle pressure system [7, 14].

2.5.5 Pressurization of the fuel

The main idea of using a pressurized gasification process is that no further compression of the syngas will be necessary. However this will require that the biomass feedstock must be pressurized and this will cause practical issues that have to be solved. A common method for feeding the fuel is by the use of lock hoppers. The principle idea of the lock hopper system is that of three vessels connected to each other and separated by valves, a schematic figure is shown below [1].

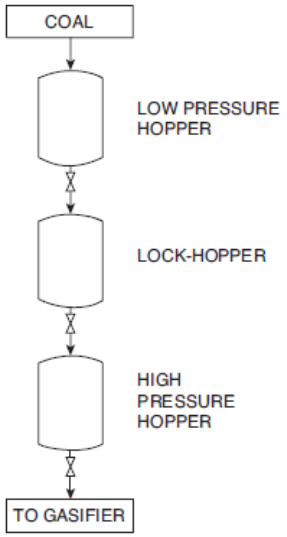

Figure 2-10. principle of operation of a lock hopper system [1].

The first vessel is always at atmospheric pressure while the last vessel is always at the operating pressure of the gasifier. When the fuel level in the last vessel is starting to sink, the valve between the high pressure hopper and the lock hopper is closed and the lock hopper is filled with fuel from the low pressure hopper. The first valve is then closed and the lock hopper is pressurized. When the pressure has reached that of the high pressure hopper the second valve is opened and the last vessel is then refilled with fuel [1]. The system of fuel feeding with a lock hopper system was used at the Värnamo BIGCC-plant. Nitrogen was used for pressurizing the lock hopper [7]. This will mean that more nitrogen is added to the gasification process, thereby diluting the syngas. A new technology utilizing piston feeding has been developed, tested and patented at the Värnamo BIGCC-plant. Although the technique wasn't fully developed it showed promising results for decreasing the amount of inert gas needed for pressurization [15].

2.6 Gas cleaning

The produced gas leaving the gasifier will contain undesired particulates, tars and other contaminations which can cause problems in the downstream application. Depending on the feedstock, the type of gasifier used and other factors the composition of the produced gas will vary. Despite the type of application in which the produced gas is meant to be used, it must meet the requirement of the specific application. For a direct combustion system the raw gas may be used with little cleanup but for use in a gas turbine extensive cleanup may be needed. It would be preferable to design gasifiers that minimize the contaminants but since the forming of these contaminants is somewhat inevitable additional gas cleaning must be considered [16].

There are five primary contaminants that have to be regarded [16]:

- Particulates
- Alkali compounds
- Tars
- Nitrogen-containing components
- Sulphur

2.6.1 Particulates

Particulates are solid-phase materials entrained in the product gas leaving the gasifier. They include inorganic ash, unconverted biomass in the form of char or material from the gasifier bed. Particulates are unwanted in the product gases since they can cause erosion on downstream equipment which leads to a shortened time of operation [16].

Particulates cleanup

Depending on the desired application requirements for particulate removal varies but for use in gas turbine levels below 15 mg/Nm^3, with a particle size below 5 µm is needed. The most common systems for particular removal are the following [16]:

- Cyclonic filters
- Barrier filters
- Electrostatic filters
- Wet scrubbers

Cyclonic filters

Cyclonic filters, or cyclones, are a general technique for removing particulates from gases. Centrifugal force is used to separate the solids form the gas. Because of their inertia the particulates are separated from the gas stream. Cyclones are often used as a first step in many gasifier systems due to their efficiency and the relatively low price and easy operation. In CFB- or entrained bed gasifiers they are integrated with the reactor for separation of the bed material and other particulates.

Cyclones are most effective for removing larger particles, they can remove >90% of particulates above about 5 µm. The pressure drop over cyclones is also very small, in the magnitude of 0.01 atm. The problem with cyclones is the removal of sub-micron particles, for these sizes the cyclonic filters becomes ineffective. Another advantage of cyclonic filters is the wide range of temperature under which they are able to operate. The limiting factor here is the choice of the material of construction. This enables for hot gas clean up which means that the sensible heat in the product gas can be maintained. They are also able to remove condensed tars and alkali metals, although the vaporized part of these contaminations still remains in the gas [16].

Barrier filters
The principle of operation for barrier filters is that of a porous material allowing gases to pass but stops particulates. They can effectively remove small-diameter particulates, including sub-micron, but the pressure drop along the filter will increase as the pores decreases. Therefore there are technical difficulties with these filters when they must handle large gas flows. Another problem is that of wet or sticky contaminations like tars. The tars stick to the filter surface and can undergo carbonization which leads to plugging of the filters.

One of the most interesting types of barrier filters is the rigid barrier filter, or hot gas filter, which enables cleaning of the gas while keeping the sensible heat. They can be constructed from either metal or ceramic materials. The metal filter may need previous cooling of the gas to avoid sintering of the filter; also there is the risk of corrosion. Ceramic filters are more suitable for high temperature operations but are more sensible to thermal stresses [16].

Electrostatic filters
Electrostatic filters are a well known technique used in many coal-fired power stations. Due to their size and high cost they are only appropriate for large-scale operation. There are two types of electrostatic filters, one with a dry scrubbing of the collector plates and one with wet scrubbing. The first can operate at temperature of 500°C or above while the other types are limited to temperatures of about 65°C [16].

Wet scrubbers
Wet scrubbers spray the gas with a liquid, often water, to remove the particulates. Many scrubbers use a venturi design to create a pressure drop which makes it easier to spray the liquid into the gas phase. Wet scrubbing using water as a liquid requires that the water is in it liquid phase. This means that the gas must be cooled prior to cleaning which leads to loss of sensible heat [16].

2.6.2 Alkali compounds
Biomass can contain large amounts of alkali compounds, such as CaO, K_2O, P_2O_5, MgO, Na_2O, SiO_2 and SO_3. This is problematic since some of these contaminations can vaporize at fairly low temperatures of about 700°C. Therefore these alkali vapours cannot be separated by filtration. When the gas temperature then is lowered the vapours will start to condensate and form particles which finally deposit on cooler surfaces of the downstream equipment. If the gas is to be used in a gas turbine, such build-up must be avoided otherwise it may cause imbalance which in turn can lead to breakdown of the machinery [16].

Alkali cleanup
To remove alkali vapours today's gasification system has to cool the product gas below 600°C. By doing so the alkali vapours condensate to solid particulates. After that previously described filtration techniques can be used to remove the alkali compounds. Consideration of the alkalis possibilities to cause corrosion on metallic or ceramic filters although has to be taken into account [16].

2.6.3 Tars
Tar is a general term which describes a wide range of oxygenated organic elements. These elements are produced by partial reaction of the biomass fuel. The tars occur in the gas stream in the form of vapour or aerosols. The presence of tar can be accepted if the product gas is to be used in e.g. burner because then cooling and condensation of the tar can be evaded. The tar then contributes to the calorific value of the fuel. If the gas is intended for applications with higher demands on the product gas even small concentrations of tar can cause a problem. Tars can easily condensate on cool equipment which can result in plugging and fouling. Also at temperatures above about 400°C the tars can undergo reactions forming solid char and coke that can plug the equipment [16].

Tar cleanup
Removal of the tar is essential in systems where cooling of the gas occurs before use, this because the condensation of tar on pipes and other equipment will cause problems. Besides the operational problems, tar also means that the gasification efficiency is reduced. Therefore it is also important to choose a gasification technology that minimizes tar production. Two different approaches on removing tar is to either physically remove the tar, using techniques resembling that of particulate removal, or catalytic or thermal processing. The physical removal requires that the product gas is cooled, allowing the tars to condensate. Catalytic processing can potentially destroy tars in their vaporized state [16].

2.6.4 Nitrogen-containing components
Ammonia is the primary contamination originating from nitrogen in the biomass. It is formed from protein and other nitrogen-containing components. Therefore high-protein fuels will result in higher concentration of ammonia. Pressurized gasification will yield higher ammonia production because of the equilibrium considerations. Ammonia in the product gas is unwanted due to the formation of NO_x when the product gas is burned. The formation of NO_x in gasifiers is not a big problem since the temperatures at which gasification occurs are low in comparison with combustion [16].

Nitrogen-containing components cleanup
Ammonia in the product gas can be removed with either catalytic destruction or wet scrubbing. If the product gas is going to be used as a fuel combusted with air the formation of NO_x in this process also has to be regarded. Therefore NO_x-reducing systems such as selective catalytic reduction (SCR) may be a more suitable solution [16].

2.6.5 Sulphur
If the biomass contains sulphur it can be converted to hydrogen sulphide or sulphur oxides when gasified. Most of the different biomass fuels contain very low shares of sulphur. For example wood generally contain <0.1% sulphur by weight. RDF can contain higher levels of sulphur. However, most biomass contains so low levels of sulphur that the concentrations of hydrogen sulphide and sulphur oxides are below cleanup requirements for most applications [16].

2.7 Fuel and fuel handling
One of the most interesting biomass fuels for gasification in Sweden is forest residual such as GROT, wood chips or other by-products from the forest industry [17]. In this section the properties and possible difficulties concerning GROT and wood chips is reviewed.

GROT and wood chips however is not the only biomass fuel that is possible to gasify. For example bark, straw and saw dust is also suitable for gasification. These fuel will however not be treated in this report.

2.7.1 GROT
GROT is an abbreviation for the Swedish words GRenar Och Toppar which can be translated into tree branches and the tip of the tree. The Swedish standard SS 187106 contains several definitions of GROT, however a common denominator for these definitions is that they state that GROT is a biofuel that can be obtained when the final felling of the timber is done [18].

The total energy available from GROT is estimated to somewhere around 57-68 TWh/year [19]. GROT is currently almost exclusively used as a fuel in thermal power stations where it is mixed with other wood based fuel prior to combustion [18].

The Värnamo BIGCC-plant has performed some test with GROT mixed with bark. The results from these test indicated that the unit operated satisfactory when mixing in GROT [7]. There are although very little experience from using GROT as a fuel. GROT however has some properties that have to be considered if it is going to be used. These are:

- Moisture content
- Contaminants
- Fuel size

The moisture content of GROT is high, very often in the region of 40-50% [18]. Since gasification often requires a moisture content of the fuel around 10-15% [20] the fuel has to be dried prior to use. Methods for drying are discussed later on.

Examples of contaminants can be sand, gravel or scrap metal. These contaminants originate from the storage of the biomass on the cutting area. They can be avoided by storing the biomass on a surface free from gravel and stone [18].

The fuel size is important since too large fractions of the fuel can cause problem in transport screws and other transport mechanisms [19].

Another issue concerning GROT is that is very voluminous. Therefore there is the risk of that the transport of untreated GROT can become very inefficient. The distance from supplier to user should not be larger than 70-100 km otherwise the transports will become uneconomic [18]. If the GROT is chipped prior to transportation this could enable more efficient transports since the GROT then can be compressed. This will require special equipment for chipping on the cutting area.

An example of a fuel composition for GROT is given in table 2-1 below:

Table 2-1. Example of composition for untreated GROT [18].

Fuel content	**Value [% weight]**
Moisture	47.9
Ash content (dry basis)	2.7
Elementary analysis (dry and ash free basis)	**Value [% weight]**
C	53.13
H	5.96
O	40.55
S	0.04
N	0.31

2.7.2 Wood chips

Wood chips can be of either the type raw wood chips or dry wood chips. The raw wood chips are obtained when the timber is prepared for sawing. They generally have a high moisture content of around 50% and are today primarily used in the paper industry [18]. Dry wood chips are a by-product when boards are cut into desired lengths, the waste pieces can then be chipped. The moisture content of dry wood chips is lower than for the raw wood chips and can be used for manufacturing fuel pellets [18].

Even though raw wood chips have a high moisture content, with appropriate drying method, they can possibly be more suitable for gasification since the fuel is much more homogenous than GROT. Wood chips have been used in gasification both at the Värnamo BIGCC-plant and at the Gussing CHP-plant [6, 7].

2.8 Drying of biomass

Normally biomass has high levels of moisture. However the gasification process requires relatively low moisture contents of the fuel, therefore fuel drying may be necessary. There are different ways of drying biomass and each method has its own advantages and disadvantages.

The drying mechanism for biomass is in short two simultaneous processes, heat transfer to the biomass and mass transportation of the evaporated moisture. The heat is usually applied with convection, conduction or a combination of them. The drying medium is the gaseous medium that transfers the heat to the process. The drying medium can be in direct contact with the biomass or indirect contact. It can be air, steam, a combination of vapour and air or flue gas for example from a combustion process. If steam is used in a direct contact with the biomass it has to be superheated otherwise the steam will condensate on the biomass and increase the moisture content. If the drying medium on the other hand is flue gas the gas can't be in the saturated state. The moisture in the biomass is removed as vapour either naturally or by forced drying. Forced drying is often used to increase the overall efficiency or to reduce the cost of drying. Which drying medium and technology that should be used depends on the system that it's going to work with. It is important to integrate the dryer in the power plant to get an efficient plant as possible. Some things to think of when choosing the drying technique are available heat source and capacity range[21].

2.8.1 Natural drying

Natural drying is the oldest type of drying and uses the surrounding air to dry the biomass. Natural drying is not considered as a forced drying type. How much the biomass can be dried depends on a various number of factors like initial moisture content, material type, location of storage and if it's stored in an open or closed storage [21]. The amount of heat transferred to the biomass from the air is also important for the drying. When using an open storage the weather has a great impact on the drying. During the time the biomass is stored natural drying occurs. The principle of natural drying is that when the biomass is stored air transports the moisture away from the biomass. The heat needed to evaporate the moisture comes from convection with air or from activity in the biomass. Natural drying takes time and depends on how much the biomass is supposed to be dried [22]. In European conditions using natural drying, wood can be dried to 15-25% moisture depending on season and location [23].

When using biomass in a power plant the demand of biomass varies with the electricity production from the plant. Because of the varying demand the biomass often has to be stored before use. To have enough bio fuel at all times the biomass is often stored near the power plant as the type of biofuel used in the plant, usually wood chips. When storing wood chips in large piles for a long time some known problems or negative effects can occur. Like high dry matter loss, heat development which can lead to self ignition, health issues because of allergenic microspores released in high concentrations into the air are some issues [22].

The temperature increase in the wood pile is due to fungal activity, especially fungal growth. To decrease the risk for self ignition when storing wood chips a tunnel of air under the pile can be used. For example if the pile of wood chips has an initial moisture content of 22 wt-% (wet basis) the result is that after a couple of days the temperature gradually decrease from 75°C to 50°C for the ventilated pile but remains 75°C for a conventional pile. The last weeks of storage the temperature was between 25-50°C for the ventilated pile. After ten weeks the amount of microspores was reduced with a factor of ten. The storage with an air tunnel also gives extreme low moisture content around 15%. But the lower temperature for a longer time gives a favourable environment for different species of micro fungi that can grow despite the low moisture content [22].

2.8.2 Flue gas drying

Flue gas drying is a well known drying type on the market with good availability and stable operation. The dryer uses heat from a flue gas to evaporate the moisture in the biomass. The biomass is directly heated by the flue gas for most of the flue gas dryers but it can also be indirect heated. After the dryer the cooled flue gas and the evaporated moisture is separated from the fuel by a cyclone. Because of that the latent heat in the evaporated moisture can't be utilized it goes to waste which is a big drawback for the flue gas dryer. If the heat needed to evaporate the fuel moisture could be used in the process the plant would get a higher overall efficiency. When using an oxygen rich hot flue gas the fire and explosion risk increase which also is a disadvantage along with the release of organic compounds from the dryer that causes odor emissions [21].

One of the most common flue gas dryer used for biomass drying are the direct rotary dryer also called rotary cascade dryer. This type has low electricity consumption and well known empirical design rules. A rotary dryer can be direct or indirect heated. The rotary dryer consists of a slowly rotating drum that is in a small angel to the horizontal plan and a cyclone. The wet material enters at the upper end of the dryer and exits at the lower. The drying medium that's in direct contact with the biomass can have a parallel flow or counter flow to the drying mass. The force that's moves the drying material down the drum is gravity and when parallel flow is used also the entrainment with the drying medium. The drum has flights on the inside of the shell that lifts the material around the periphery and causes a uniform cascade which the hot gas passes through. A direct rotary dryer is shown in the figure 2-11 below and a typical flight arrangement can be seen in figure 2-12 [23].

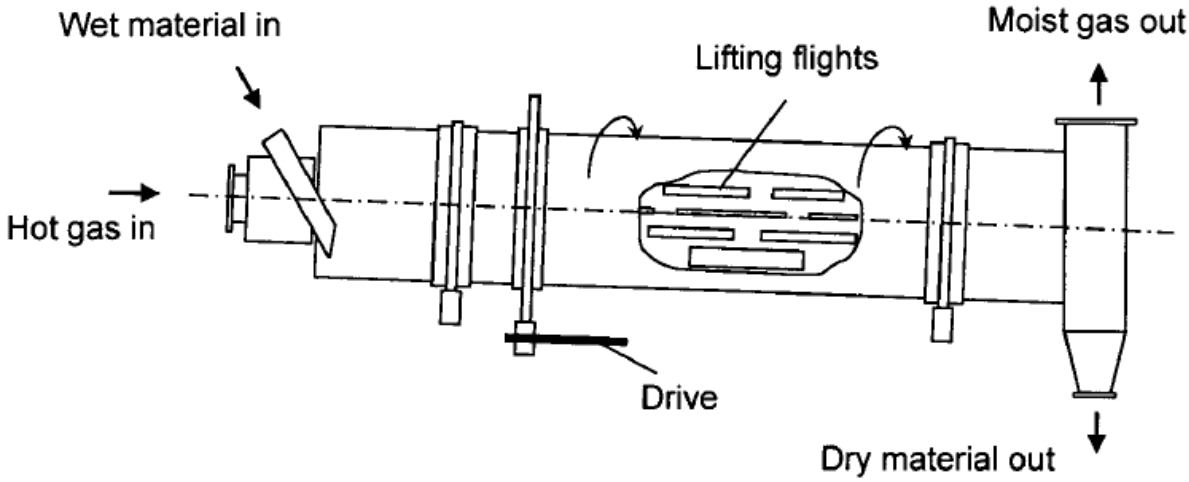

Figure 2-11. Direct rotary dryer [23].

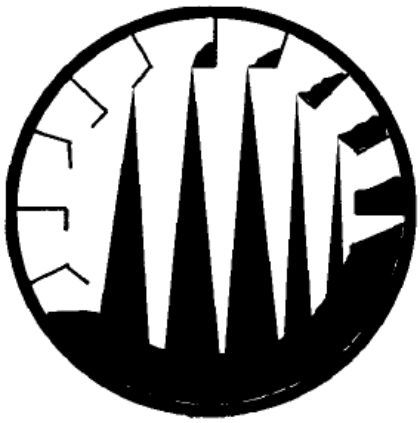

Figure 2-12. Typical flight arrangement in a direct rotary dryer [23].

The primary drying takes place when the biomass is in the cascade falling down and the gas has good contact with the biomass. When the biomass is in contact with the drums surface the drying is minimal. The dryer often has a draught fan at the exit that uses suction to drive the flue gas through the dryer. In a counter flow dryer the feedstock is driest when it meets the hottest drying gas. This will increase the fire hazard which is why the counter flow dryer isn't used in IGCC-applications. The counter flowing dryer otherwise generally has a superior heat transfer. The inlet temperature for a non temperature sensitive drying material can be as high as 1000°C. For drying of wood chips in commercial installation the inlet temperature is often limited to 250°C for safety reasons. The residence time in the dryer depends on numerous factors such as flight design, number of flight, rotation speed, gas speed, dryer inclination and dryer length [23].

2.8.3 Steam drying

Steam dryers uses steam indirect or in direct contact with the biomass. Because the direct steam dryer operates in a steam environment the latent heat can be recovered by the condensing the vapour produced from the evaporated moisture. The atmosphere is inert around the biomass which means that there is no risk for fire in the steam dryers. A disadvantage on the other hand is that the evaporated steam contains organic compounds. Throughout the heat recovery the condensate is corrosive due to the high biochemical oxygen demand. Because of the corrosive effect the condensate has to be cleaned in some way [21].

When superheated steam comes in contact through convection with a wet fuel, depending on the temperature of the material the steam may first condense and thereby increase the moisture content of the material. When the temperature of the material is raised the moisture begins to evaporate. This occurs at a constant surface temperature and evaporation rate as long as the surface is kept wet from the inside of the material. If now the steam flow or temperature increase the drying rate increases considerably. The largest amount of moisture is evaporated under this period which is called the constant rate period. When the transportation of moisture to the surface can't keep the moisture constant the falling rate period starts and the critical moisture content is obtained. This is also when the temperature and pressure begins to rise. It is not common to dry biofuel to a moisture content less than 0.15 kg/kg for industrial applications. This is far from the falling rate period and even further from the equilibrium moisture content which is around 0.06 kg/kg. In figure 2-13 the moisture content over time is shown during direct steam drying. The figure shows the heat up period (a), the constant rate period (b), the falling rate period (c) and where the critical moisture content occurs [24].

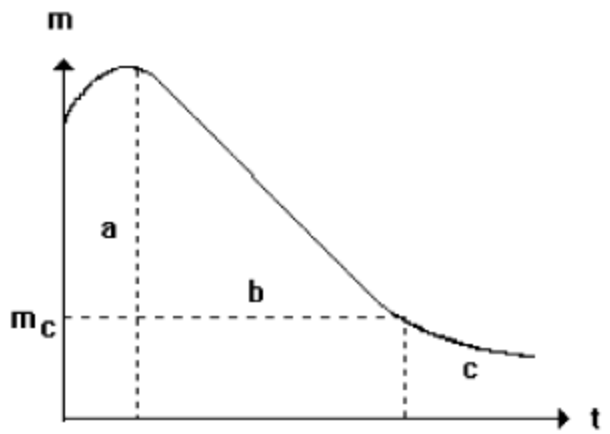

Figure 2-13. Moisture content as a function of time during steam drying [24].

2.9 Other applications

As mentioned in section 2.2 there are other applications where the syngas produced in the gasification process can be used. In this section a brief overview of these alternatives are given.

2.9.1 Substitute natural gas

The main users of natural gas in Sweden today are power production facilities and the industry. It is to some extent used for domestic applications, a small fraction is also used as a fuel for the transportation sector. This sector is however expanding rapidly [25]. Because SNG is equivalent to natural gas and SNG from biomass is a renewable energy source this could enable replacement of natural gas, which is a fossil fuel, with a renewable fuel. By reforming the produced syngas into SNG the already existing natural gas distribution net can be used to supply the gas to the end users [26]. Thereby the SNG can be produced in large scale facilities enabling cost effective production.

Since methane is the main component of natural gas the gasification plant has to be combined with a methanation process in order to convert the syngas into SNG. In the methanation process CO and CO_2 is converted into CH_4 and H_2O by the following reactions:

$$CO + 3H_2 \leftrightarrows CH_4 + H_2O \tag{2.1}$$

$$CO_2 + 4H_2 \leftrightarrows CH_4 + H_2O \tag{2.2}$$

To catalyse the methanation of CO and CO_2 different metals can be used where nickel is the most common due to its relatively low price, reactivity and selectivity towards methane [27].

Since the methanation of both CO and CO_2 is strongly exothermic the design of the methanation reactor has to be considered. This is to avoid too large temperatures which can cause equipment failure.

After the methanation process the CO_2 content of the gas is still too high to be acceptable for the natural gas net. The removal of CO_2 can be done with membrane separation, scrubber absorption or pressure swing adsorption [28]. Depending on the type of CO_2 removal technique used the gas is dried either prior to or after the CO_2 removal.

The gas clean-up requirements for the syngas are determined by both the methanation process and the natural gas infrastructure. The methanation process is very sensitive to particles since they can cause build up on the wall of the reactor and thus inactivating the catalyst. The methanation process is not very sensitive to tars as long as the tar levels aren't too high. If the tar levels are too high this can bring a decline in the catalyst activity [27].

Two different configurations of a SNG-plant with biomass as feedstock has been evaluated by ECN - Biomass Systems, one with an oxygen blown CFB-gasifier and one with a steam blown indirect gasifier. The indirect system gave a slightly higher SNG efficiency, 67% compared to 66.3%, but it was mentioned that the technique of indirect gasification isn't as developed as the CFB-gasification technique [27]. The SNG efficiency is defined as the energy output in form of SNG compared to the total energy input of biomass.

Göteborgs Energi and E.on has started a two stage project based on indirect gasification technology for SNG-production. The first stage is to have a working 20 MW plant in 2012. The second part of the project is to upgrade the plant to 80 MW which will be up and running in 2015 [29].

2.9.2 Synthetic fuels and chemicals

Raw syngas can also be used for production of different chemicals and synthetic fuels. How to separate these two classes is somewhat dependent on the end use of the final product. For example it is common to produce methanol via gasification but often the methanol is just an intermediate product which can be further processed. The methanol can however also be used as a fuel.

Synthetic fuels

Examples of synthetic fuels that can be derived from syngas are methanol, Di-Methyl Ether (DME) and Fischer-Tropsch Diesel. The production of these fuels is most of the time carried out with some type of catalytic process. To reach the requirements of these fuel catalysts some kind of syngas processing is needed. The requirements state the maximum allowable content of CH_4 and CO_2 and the optimal H_2/CO ratio. The techniques for catalysing the syngas are different for the desired final product but the steps between the gasification and the final processing is somewhat similar.

Depending on the fuel catalyst up to 2% by volume of methane can be accepted. As methane contents often can be as high a 5-10% by volume the syngas has to be processed. This can be achieved by using steam methane reforming where methane is allowed to react with steam to form CO and H_2. The H_2/CO-ratio can be adjusted with the CO-shift-reaction as described by Eq. 3.7. The CO_2 in the syngas can finally be removed by techniques similar to those described in the previous chapter [5].

Methanol

About 3.3 million ton/year, which is about 9% of the world's total methanol production, is produced from gasification of coal or heavy residues. However only about 3% of the total methanol produced is used as a fuel. Other frequent applications for methanol are [1]:

- Production of formaldehyde.
  - Formaldehyde is used for production of plastic.
- Production of MTBE.
  - MTBE is primarily used as a addition to gasoline in order to raise the octane number.
- Production of acetic acid

Fischer-Tropsch Diesel
In 1923 the German scientists Fischer and Tropsch were able to produce liquid hydrocarbons via a catalytic process. The first use of this process was during the Second World War but it was shut down close after the war ended. Renewed interest was gained in the 1950s in South Africa as the country was subjected to a trading embargo due to the apartheid regime. A new facility was opened in De Meern in the Netherlands in 2002 [5].

FT-diesel is very similar to conventional diesel and can be blended with regular diesel and used in existing diesel engines. If pure FT-diesel is to be used some additive has to be used in order to ensure proper lubrication etc [5].

There are two options for the Fischer-Tropsch synthesis, either high or low temperature synthesis. Independent of which route that is chosen both takes place at pressures around 10-40 bar [5]. Therefore either a pressurized process or compression of the syngas is required.

Chemicals

Ammonia
Ammonia produced from coal and heavy oil gasification amounted to almost 10% of the world's total ammonia production in 2001. Ammonias prime use is as a fertilizer for agriculture.

Production of ammonia from syngas is done in a catalytic process where the following reaction occurs:

$$N_2 + 3H_2 \leftrightarrows NH_3 \tag{2.3}$$

Because of that the gas intended for ammonia synthesis primarily should contain N_2 and H_2 the raw syngas has to be pre-treated. This pre-treating includes tar and volatiles removal, desulfurization, removing the CO with the CO-shift process, CO_2 removal and adjustment of the N_2/H_2-ratio. Since N_2 is needed for the ammonia synthesis the question of what kind of gasification process appears. Higman and van der Burgt suggest that an oxygen blown gasification where the separated nitrogen is added later is to prefer as this improves the cold gas efficiency [1].

2.10 Rankine cycle

The total amount of electricity produced in Sweden in 2007 with biomass as fuel was 6.1 TWh[1] [30]. This is a relatively small part of the total electricity production which amounted to a total of 144.9 TWh in 2007. However it is estimated that the total energy input from biofuels can be increased [19]. Almost all electricity from biofuels is produced in combined heat and power plants.

The Rankine cycle is used for power generation for all different types of fuel. The combustion of the fuel creates hot flue gas that is used to produce steam and power is generated from the steam with help of a steam turbine. This is one of the easiest ways of producing electricity from biomass. In table 2-2 the efficiency, size and type of fuel for some different power plants using the Rankine cycle in single cycle process is listed [31].

Table 2-2. Performance data for bio-power plants using a Rankine cycle [31].

Plant (country, startup year)	**Fuels used (moisture content wt% w.b.)**	**Size MW_e**	**Efficiency HHV $\eta_{e,\,net}$ [%]**	**Efficiency LHV $\eta_{e,\,net}$ [%]**
Average Zurn/NEPCO plant (-, -)	Wood (50)	25	24	28
Delano I plant (USA, 1991)	Agricultural waste (24)	27	26	29
McNeil plant (USA, 1984)	wood (47)	50	25	30
Måbjergværket CHP plant (DK, 1993)	Straw (16) wood(40) msw (23) natural gas (0)	34[2]	-	30[2]
Händelöverket CHP boiler (S, 1994)	Wood(50)	46[2]	27[2]	32[2]
Enköping CHP plant (S, 1995)	Wood (45)	28[2]	28[2]	33[2]
EPON co-fire plant (Nl, 1995)	Demolition wood	20	34	37
Whole Tree Energy concept (-, -)	whole trees	100	33	38
ELSAM cofiring scale-up project (DK, 2005)	coal (10) straw (16) wood (45	250	-	44

The electrical efficiencies for the power plants are in the region of 30% based on the lower heating value. Co-fired plants showed a slightly higher efficiency.

[1] Peat is included in this figure.

[2] For CHP plants a theoretical estimation has been made of how much electricity that could be generated when there was no heat supply.

3 Theory of equilibrium modelling

To be able to construct a valid model of a BIGCC-plant it is important to understand the theory of the gasification process. This chapter will provide the theoretical background on equilibrium modelling of a gasification process.

When modelling a gasification process the choice of making a model based on thermodynamic equilibrium or a kinetic rate model appears. Kinetic rate model is depending on the design of the gasifier. The equilibrium model is independent of the gasifier design which can make them more suitable for a system study of the most important process parameters [32]. The use of an equilibrium model assumes that the residence time of the reactants in the gasifier is high enough to reach chemical equilibrium [33].

3.1 Assumptions

The calculations assume that the main product gases CO, CO_2, H_2O, H_2 and CH_4 are at equilibrium. Nitrogen is considered inert. Sulphur in the fuel is assumed to form hydrogen sulphide. Formation of tars is neglected although it has to be taken into account during plant operation [32]. The bed material is considered inert and only act as a transportation agent of the heat released in the combustion reactor. All gases are assumed to behave as ideal gases.

3.2 Reactions

The main chemical reactions of a gasification process are those containing, carbon, carbon monoxide, carbon dioxide, hydrogen, water/steam and methane. These reactions are [1]:

combustion reactions,

$$\mathrm{C} + ½\mathrm{O_2} = \mathrm{CO} \tag{3.1}$$
$$\mathrm{CO} + ½\mathrm{O_2} = \mathrm{CO_2} \tag{3.2}$$
$$\mathrm{H_2} + ½\mathrm{O_2} = \mathrm{H_2O} \tag{3.3}$$

the Boudouard reaction,

$$\mathrm{C} + \mathrm{CO_2} \leftrightarrows 2\mathrm{CO} \tag{3.4}$$

the water gas (or steam carbon) reaction,

$$\mathrm{C} + \mathrm{H_2O} \leftrightarrows \mathrm{CO} + \mathrm{H_2} \tag{3.5}$$

and the methanation reaction,

$$\mathrm{C} + 2\mathrm{H_2} \leftrightarrows \mathrm{CH_4} \tag{3.6}$$

Reactions with free oxygen can all be regarded as complete under gasification conditions and thus the combustion reactions is not needed for determining an equilibrium composition, the three heterogeneous reactions Eq. 3.4-3.6 are enough. In some cases the carbon conversion is almost complete and then Eq. 3.4-3.6 can be reduced to the two homogeneous reactions [1]:

the CO-shift reaction,

$$\mathrm{CO} + \mathrm{H_2O} \leftrightarrows \mathrm{CO_2} + \mathrm{H_2} \tag{3.7}$$

and the steam methane reforming reaction,

$$\mathrm{CH_4 + H_2O \leftrightarrows CO + 3H_2} \tag{3.8}$$

Chemical equilibrium occurs where Gibbs free energy is at its minimum and thus the equilibrium concentration can be solved when knowing the chemical equilibrium constant K_p. The chemical equilibrium constant for the different reactions are given by [34] for the Boudouard reaction;

$$K_{p,B} = \frac{{X_{CO}}^2}{X_{CO_2}} \frac{p}{p^0} \tag{3.9}$$

for the water gas reaction;

$$K_{p,SC} = \frac{X_{CO} \cdot X_{H_2}}{X_{H_2O}} \frac{p}{p^0} \tag{3.10}$$

for the methanation reaction;

$$K_{p,M} = \frac{X_{CH_4}}{{X_{H_2}}^2} \frac{p^0}{p} \tag{3.11}$$

for the CO-shift reaction and

$$K_{p,SH} = \frac{X_{CO_2} \cdot X_{H_2}}{X_{CO} \cdot X_{H_2O}} \tag{3.12}$$

for the steam methane reforming reaction.

$$K_{p,SR} = \frac{X_{CO} \cdot {X_{H_2}}^3}{X_{CH_4} \cdot X_{H_2O}} \left(\frac{p}{p^0}\right)^2 \tag{3.13}$$

The equilibrium constant can be calculated from [34]:

$$K_p = \exp\left(\frac{-\Delta G^0}{RT}\right) \tag{3.14}$$

ΔG^0 is the Gibbs free energy change when going from pure reactants to pure products. R is the universal gas constant and T is the temperature. ΔG^0 can be calculated from:

$$\Delta G^0 = G(products) - G(reactants) = \sum_i n_i \cdot (\Delta G^0_{f,T})_i - \sum_j n_j \cdot (\Delta G^0_{f,T})_j \tag{3.15}$$

Where $\Delta G^0_{f,T}$ is the Gibbs standard free energy change at a certain temperature and n is the number of moles in the balanced reaction. Values of the Gibbs standard free energy changes are adopted from the JANAF thermochemical tables [JANAF]. Calculated values of K_p for Eq. 3.9-3.13 over a range of temperatures are presented in appendix A.

3.3 Energy balance

An energy balance, based on the heat of formation, for the process can be described by the following equation [35]:

$$\sum \dot{m}\Delta H^0_{f,298}{}_{feed} + \sum \dot{m}H(T)_{feed} = \sum \dot{m}\Delta H^0_{f,298}{}_{product} + \sum \dot{m}H(T)_{product} + Q \quad (3.16)$$

On the left hand side of the equation, the two terms describes the total heat of formation and the total enthalpy for all feed streams. The two first terms on the right hand side describes the total heat of formation and the total enthalpy for all product species. The heat loss of the system to the surroundings is denoted by Q.

The heat of formation of the biomass fuel and the unconverted carbon can be calculated from [36]:

$$\Delta H^0_{f,biomass} = n_H \Delta H^0_{f,H_2O} + n_C \Delta H^0_{f,CO_2} + n_S \Delta H^0_{f,SO_2} + LHV_{biomass} + n_{water} \Delta H^0_{f,H_2O} \quad (3.17)$$

$$\Delta H^0_{f,coal} = n_C \Delta H^0_{f,CO_2} + LHV_{coal} \quad (3.18)$$

This is based on that CO_2, H_2O and SO_2 are the only combustion products and that all the nitrogen in the fuel is considered inert. n_i denotes the moles of species per kg fuel.

The lower heating value of the biomass fuel can be calculated by numerous methods, in this work the heating value is determined accordingly to [37]:

$$LHV_{biomass} = HHV_{biomass}(1 - Y_{water}) - 2.444\left(Y_{water} + Y_H \cdot 8.936(1 - Y_{water})\right) \text{ [MJ/kg, w. b]} \quad (3.19)$$

Y_{water} and Y_H denotes the mass fraction in the fuel of water and hydrogen respectively. Y_{water} is on wet basis and Y_H is on dry basis. 2.444 is the enthalpy difference between gaseous and liquid water at 25°C in MJ/kg. 8.936 is the molar ratio between H_2O and H_2. The HHV is calculated from:

$$HHV_{biomass} = 34.91 \cdot Y_C + 117.83 \cdot Y_H + 10.05 \cdot Y_S - 01.51 \cdot Y_N - 10.34 \cdot Y_O - 2.11 \cdot Y_{ash} \text{ [MJ/kg, d. b.]} \quad (3.20)$$

Y_i represents the mass fraction of the species in the biomass fuel on a dry basis.

3.4 Mass balance

In the gasification zone a mass balance for each element is implemented:

$$\dot{m}_{C,biomass} = \dot{m}_{C,CO} + \dot{m}_{C,CO_2} + \dot{m}_{C,CH_4} + \dot{m}_{C,char} \quad (3.21)$$

$$\dot{m}_{H,biomass} + \dot{m}_{H,moisture\ in\ biomass} + \dot{m}_{H,oxidizer} = \dot{m}_{H,H_2O} + \dot{m}_{H,H_2} + \dot{m}_{C,CH_4} + \dot{m}_{H,H_2S} \quad (3.22)$$

$$\dot{m}_{O,biomass} + \dot{m}_{O,moisture\ in\ biomass} + \dot{m}_{O,oxidizer} = \dot{m}_{O,H_2O} + \dot{m}_{C,CO} + \dot{m}_{C,CO_2} \quad (3.23)$$

By combining the mass balance equations with the equations for the equilibrium constants, Eq. 3.9-3.11 for the heterogeneous case and Eq. 3.12.-3.13 for the homogenous case, along with the energy balance to obtain the equilibrium temperature a syngas composition can be obtained.

4 Modelling

4.1 IPSEpro

The program IPSEpro is used for simulations in this master thesis. IPSEpro is a simulation environment for modelling and analyzing processes in energy engineering. It consists of two parts, the Model Development Kit (MDK) and the Process Simulation Envrionment (PSE).

MDK is used for building new component models or adjusting already existing models from a library. This is done by specifying the mathematical equations that applies for a certain component, e.g. a compressor in a gas turbine. Thereby the complexity of the models can be chosen by the user and a more or less realistic component can be built.

PSE is where the process model is built with help of the components from a library created in MDK. It provides a flow sheet editor where the desired components can be inserted and connected to each other. The properties of the components can then be specified to match the equipment which is being modelled, e.g. the mechanical efficiency for a generator. PSE can then solve the equations for the components by using a Newton–Raphson method provided that enough variables are specified for the number of equations given. Reasonable starting values has to be estimated or else the calculations may not converge.

IPSEpro also contains the Advanced Power Plant library (APP) which is a library that contains models created in MDK. The APP-library contains different components such as compressors, turbines, heat exchangers etc. Many of these standard components are used in this thesis and the settings of them are matched so they fit the desired parameters.

IPSEpro also provides the PS MS Excel Integration which is a module that enables exchange of data between PSE and Microsoft Excel. It can also be used to perform a series of calculation and so different parameters and their influence on the model performance can be studied [38].

4.2 Gasifier model

The selected gasification technology in this study is a char indirect, two-stage gasifier with steam reforming, described in section 2.3.3. This type of gasifier is chosen because of its potential of producing a medium calorific value gas with low amounts of nitrogen in the produced gas. The indirect gasification dual bed concept has not been demonstrated in practice for a pressurized gasifier although the atmospheric version has been successfully demonstrated.

The developed model consists of a gasification chamber, a combustion chamber and streams for handling the transport of the char, ash and bed material between the chambers. The pressure level of the gasifier is chosen so that the syngas pressure meets the required pressure for the combustion chamber in the gas turbines. The pressure drop in the gasifier and combustor can be set as a fraction of the total pressure or as a specific amount of bar. Figure 4-1 shows the graphical representation of the gasifier model in IPSE.

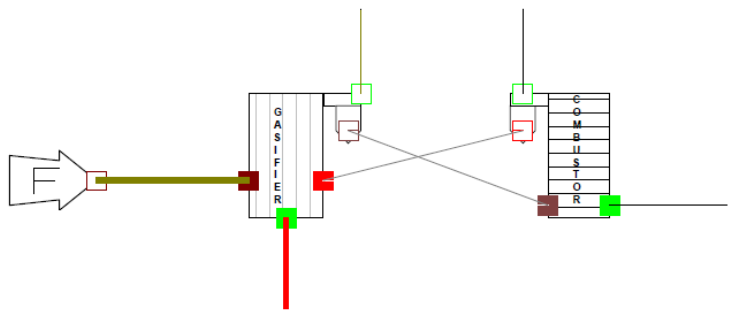

Figure 4-1. The gasification and combustion chamber and their connected streams.

In the gasification chamber the main part of the carbon in the feedstock is converted to syngas. Any unconverted solid carbon from the feedstock is separated from the gas flow by a cyclone and transported to the combustion chamber were it is combusted. The amount of carbon converted to CO, CO_2 and CH_4 is described by the variable conversion C and is defined as:

$$Conversion\ C = \frac{Amount\ of\ carbon\ in\ syngas\ (kg/s)}{Amount\ of\ carbon\ in\ fuel\ (kg/s)} \tag{4.1}$$

The heat released in the combustor is transported back to the gasification chamber by the circulating bed material. Specific heat capacity for the char, bed material, and ash must be set in the model. In the gasification chamber the heating value and heat of formation for the biomass fuel are calculated. In the gasifier the heat loss must be specified while in the combustion chamber heat loss is neglected or it can be added to the heat loss in the gasifier. The heat loss is set as a fraction of the total amount of heat input into the gasifier.

The air to fuel ratio, lambda, in the combustor must be greater than 1 in order to ensure complete combustion of the char.

In IPSE for every connection a global must be specified. The global describes the composition of the material flow, for example steam can be a global. The char and ash connection stream to the combustor is basically a fuel stream with a fuel composition. Extra variables for specifying the specific heat for the bed material, the heat flow and the fuel and bed mass flows has been added to the standard fuel stream connection. The connection stream back to the gasifier chamber is of the type bed material which has the same settings as the char and ash stream but the global in the stream is of the type bed composition. The bed composition only consists of one component which is the bed material. The gasifier models settings can be seen in table 4-1 to table 4-3.

Table 4-1. Gasification chamber settings.

Pressure drop:	1 bar
Cp char:	0,71 kJ/kgK
Equilibrium equations:	Boudouard, water gas and methanation
Heat loss:	2%

Table 4-2. Combustion chamber settings.

Pressure drop:	1 bar
Cp ash:	0,71 kJ/kgK
Lambda:	1,1

Table 4-3. Stream settings

Cp bed (Char and ash stream)	0,84 kJ/kgK
Fuel mass flow (bed material)	0 kg/s

The energy required for pressurizing the fuel is accounted for in the gasifier. A specific work (kW/(kg·bar)) can be set and the total work is thereby calculated.

For a real gasifier equilibrium may not be reached [32]. Therefore the model has been developed so that this can be accounted for. By adding offset temperatures to the equilibrium temperatures a more correct composition can be calculated. This however requires that measured data is provided so that equilibrium temperatures can be calculated. The offset temperatures are not used during the modelling but are added for future work.

4.2.1 Atmospheric gasifier

The previously developed gasifier model required some changes in order to function at an atmospheric pressure. A re-circulation of the syngas from the gasification chamber to the combustion chamber had to be introduced. This was necessary to maintain the high gasification temperature, with the extra energy supplied to the combustion chamber more steam could be added to the gasifier without lowering the gasification temperature. Otherwise the model of the gasifier is the same as for the pressurized version.

4.3 Gas turbine

The choice of a suitable gas turbine is dependent on the size of the total facility. With a plant size in the magnitude of 50-100 MW of fuel input, which is the case for this study, the matching gas turbine will have an electrical power output in the order of ~13-26 MW. For a gas turbine to perform well in a combined cycle, the exhaust gas temperature from the gas turbine cannot be too low. Otherwise the remaining energy in the exhaust gas won't be sufficient for the steam cycle and this would decrease the overall efficiency of the combined cycle. The choice fell on a Siemens machine, SGT-400, a twin shaft gas turbine. The reason for choosing the SGT-400 was that it had an appropriate power output and also a suitable exhaust gas temperature for combined cycle applications. The data in table 4-4 is adopted from available data from Siemens [39].

Table 4-4. Performance data for the SGT-400 [39].

Power output	12.9 MW_e
Electrical efficiency	34.8%
Pressure ratio	16.8:1
Exhaust gas flow	39.4 kg/s
Exhaust gas temperature	555°C

This data is for a natural gas fired machine. For the model of the gas turbine, standard components from the APP-library for the compressor, the turbines and the combustion chamber were used. The parameters of each component were then adjusted so that the results should match those given in table 4-4. This was done with natural gas as a fuel. The resulting turbine inlet temperature (TIT) and mass flow air to the compressor obtained from this model was then used as set points for the model when used in the BIGCC with syngas as fuel.

The fuel pressure required for admitting the gaseous fuel to the combustion chamber is calculated according to [40]:

$$p_{fuel} = 1.25 \cdot p_{compressor\ delivery\ pressure} \tag{4.2}$$

This elevated fuel pressure in comparison with the pressure of the air supplied by the compressor is needed to ensure that the admission of the fuel is working properly. An overall pressure drop over the combustor is assumed to be 2% of the compressor delivery pressure [41].

The model of the gas turbine doesn't consider what happens when the fuel mass flow is increased. The strategy of bleeding air from the compressor is used when the turbine is connected to the gasifier. The aspect of the increased mass flow to the gas turbines combustion section is neglected in this model and it is assumed that the unit is modified so that admitting the fuel will cause no problems.

4.4 Steam cycle

Once the choice of gas turbine is made it is the design of the steam cycle that will determine the overall efficiency. The challenge is to transfer the thermal energy from the gas turbines exhaust gases so that maximum power from the steam turbine is achieved. However the BIGCC-plant will differ from a conventional combined cycle power plant in that it is possible to extract thermal energy from the gasification. Therefore no greater effort will be made to optimize the basic steam cycle. These different integration strategies for recovering the heat from the gasification process will be discussed further on. The following section will only describe the basic configuration of the steam cycle and assumptions made for it.

The configuration chosen for the steam cycle is shown in figure 4-2 below. The steam cycle is of the single pressure level design. The reason for choosing a single pressure cycle is because of the relatively low exhaust gas temperature and mass flow from the SGT-400. Multiple pressure levels would result in too low flows in the low pressure section of the cycle.

The steam cycle has an extra heat exchanger preheating the feedwater to the feedwater tank/deaerator. The deaerator pressure is 1.2 bar. The slight overpressure is chosen because it makes disposal of the expelled gases easier. The pressure determines the saturation temperature of the feedwater. Since the deaerator requires a temperature difference of at least 11°C to achieve a high enough level of deaeration the feedwater temperature to the deaerator is set to 93°C. The steam used for deaeration is supplied by a drain connection from the economizer with a pressure reducing valve as shown in figure 4-2. After the deaerator the feedwater pressure is raised to the desired pressure, which is the admission pressure to the steam turbine plus the pressure drops along the way. The following heat exchanger is the economizer which brings the feedwater temperature to almost saturation temperature [42].

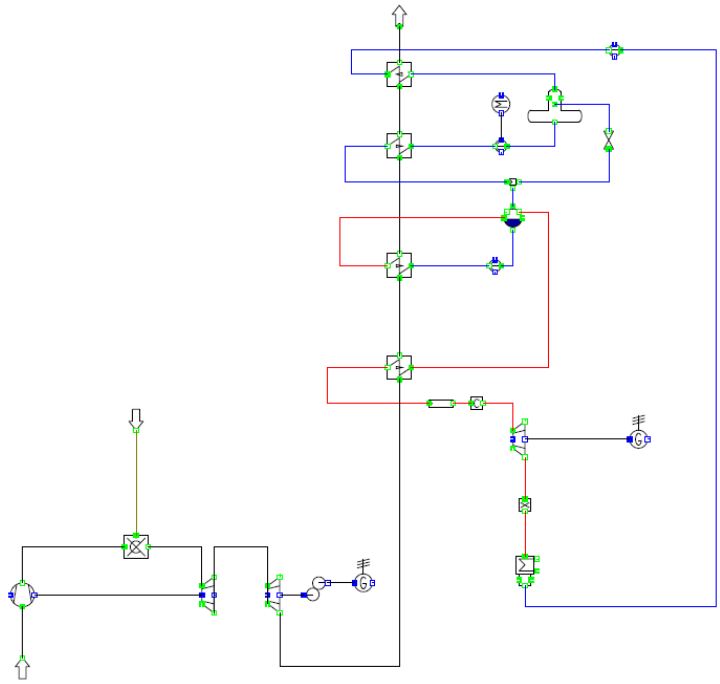

Figure 4-2. The basic steam cycle configuration.

The approach temperature difference in the steam drum is set to 5°C. This is the difference between the saturation temperature for the water in the drum and the temperature of the water exiting the economizer. The reason for having a difference in temperature is to avoid evaporation in the economizer [42].

The feedwater is then evaporated and superheated before entering the steam turbine. The pinch-point for the evaporator is set to 5°C. The pinch-point is the temperature difference between the outlet temperature of the steam and the exit temperature of the exhaust gases. The pinch-point is decisive for the heat exchanger surface of the evaporator. A larger pinch-point requires a smaller heat exchanger surface and the other way around [42].

The overall pressure drop on the exhaust gas side is set to 3 mbar. It is favourable to have as low pressure drop as possible on the exhaust gas side otherwise the gas turbine will be punished in form of a lower enthalpy drop in the turbine [42].

4.5 Other components

4.5.1 Steam dryer

The choice of dryer depends on what form the available energy is in. In this case there is enough energy in the HRSG to extract energy required for drying. The steam dryer model is a simple model of an indirect dryer using steam as drying medium. The superheated steam enters the dryer, transfers heat to the biomass and then leaves the dryer as condensate.

The steam dryer has five connected streams, fuel and superheated steam entering the dryer and dried fuel, condensate and evaporated moisture leaving. The model uses simple energy and mass balances equations to calculate the steam needed for evaporating the desired amount of moisture. In the model the desired moisture content of the dried bio-fuel has to be set. The superheated steam entering the dryer leaves as saturated water and all the energy from the steam is transferred to the bio-fuel. The amount of energy transferred to the fuel and the mass of evaporated water from the bio-fuel is calculated in the model. The moisture evaporated from the fuel leaves the dryer as saturated steam. The temperature of the dried fuel leaving the dryer is the same as the saturation temperature of the water. Also the lower heating value of the incoming bio-fuel is calculated, this is done in the same way as in the gasification model.

5 Biomass integrated gasification combined cycle

In this section different concepts for integration of the gasification system with the combined cycle is described. Although indirect steam gasification has been demonstrated it is to the authors not known that this gasification scheme has been integrated with a combined cycle. Neither has the pressurized concept of the indirect gasification been demonstrated. Since there is no practical experience for this integration a few different configurations has been tested. To get comparable results between the different configurations the same operation parameters for all systems has been used. Flow charts for the different configurations can be seen in appendix B. The configurations and the operation parameters are described below. All of the configurations have some common features regarding the integration, described by figure 5-1;

- The gasification steam is preheated and evaporated in the HRSG (1, 2).
- The gasification steam is superheated in a heat exchanger utilizing heat from the syngas (3).
- The air to the gasifier combustion chamber is bled from the gas turbines compressor outlet and further compressed to the required pressure by a booster compressor (4).
- The flue gases from the gasifier combustion chamber are lead to the HRSG (5).
- An extra economizer is introduced for heating the feedwater in the steam cycle (6).
- The syngas passes through a hot gas filter before entering the gas turbines combustion chamber. The filter is for cleaning alkali compounds and particulates not separated in the gasifier cyclone (7).
- All of the configurations used the same type of fuel, described in section 6.1.

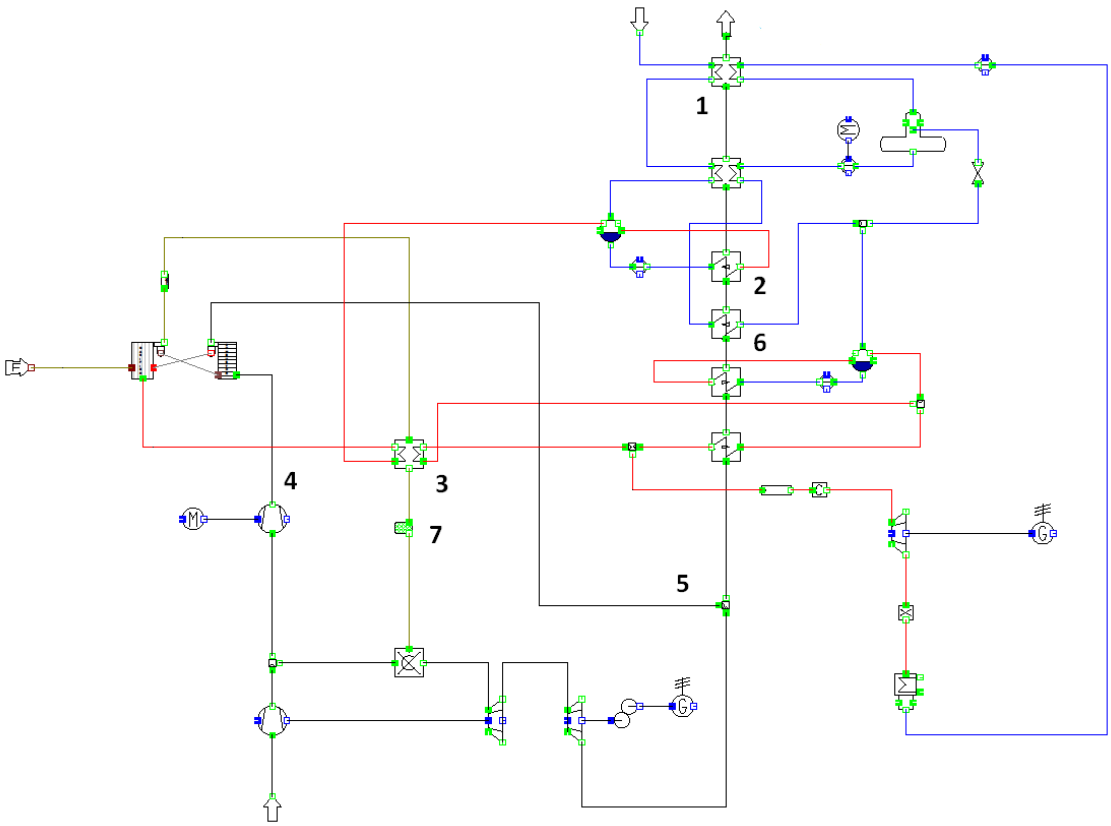

Figure 5-1. Common features of the different BIGCC-configurations.

5.1 Operation parameters

The operation parameters are given in Table 4-1table 5-1 below:

Table 5-1. Operation parameters for the different BIGCC-plants.

Gasification process	
Gasification temperature	750°C
Gasifier combustor chamber temperature	850°C
Temperature at filter inlet	550°C
Pressure drop hot gas filter	0.2 bar
Gasification steam temperature	550°C
Steam cycle	
Live steam pressure	100 bar
Live steam temperature	565°C
Gas turbine	
Turbine inlet temperature	1160°C
Mass flow air	38.65 kg/s

The reason for choosing the gasification temperature to 750°C is because this is a normal operating temperature for many gasifiers [5]. With this temperature ash softening issues can be avoided since they are in the region of about 800-950°C for many biomasses [1]. The value for the pressure drop over the hot gas filter is obtained from operational data from the Värnamo BIGCC pilot plant [7].The filter inlet temperature is chosen so that the alkali compounds have condensed but the tars will remain in their vapour state. The gas turbine data is chosen from the results obtained when modelling the SGT-400, see section 4.3.

5.2 Configuration A:

In this configuration the saturated steam from the steam cycles evaporator was split up into two streams where one of the streams were superheated in the HRSG and the other stream was superheated by the syngas cooler. The streams were superheated to the same temperature, then connected and lead to the steam turbine. The reason for using the heat in the syngas for superheating was due to the high temperatures of the syngas. The exit temperature of the syngas leaving the syngas cooler matched the live steam temperature. Therefore it was believed that this would give a favourable T-Q-chart in the form of minimized exergy losses in the syngas cooler.

5.3 Configuration B:

Here the heat from the syngas was used to preheat part of the feedwater in the steam cycle before the steam cycles evaporator. A drain was made after the first economizer in the steam cycle and part of the flow was lead to the syngas cooler. The two streams were then connected before entering the evaporator in the steam cycle.

5.4 Configuration C:

In this configuration an extra heat exchanger was introduced for cooling the syngas. It is a combination of configuration A and B where the extra syngas cooler is used for preheating part of the feed water in the steam cycle. A part of the flow to the steam cycle's superheater is directed to the first of the two syngas coolers and superheated to the steam turbine inlet temperature. It is then connected back to the main flow after the HRSG superheater. The temperature of the syngas between the two heat exchangers is 600°C.

5.5 BIGCC-plant with integrated fuel drying

Because of the varying moisture content of the biomass feedstock during the season fuel drying equipment could make the BIGCC-plant more flexible. By integrating the fuel dryer excess heat from the overall process also could be utilized in an efficient way. The selected method of drying is by using an indirect steam dryer. The reasons for choosing a steam dryer is that the exhaust gases from the gas turbine contains a large fraction of oxygen, this excess of oxygen together with an elevated temperature could mean an increased risk of fire development. Also the efficiency of steam drying is higher than for flue gas drying. Two different approaches on integration have been evaluated, the flow charts of the alternatives are shown in appendix B. The operational parameters for the two alternatives are the same as for the previous configurations except for the pinch-point in the evaporator. The pinch-point was increased due to that more energy was needed downstream in the HRSG for the production of the drying steam.

5.5.1 Integrated fuel drying, alternative 1

The overall outline of alternative 1 is similar to configuration A, the extra drying configuration is described in figure 5-2. An extra evaporator (1) and superheater (2) for the steam intended for drying is added to the HRSG. The steam produced from the moisture in the fuel is added to the drying steam (3) and then superheated before re-entering the steam dryer (4). The condensate leaving the steam dryer has two drains (5), one drain for disposal of the excess condensate and one drain were the condensate is pressurized (6), evaporated, superheated and then used for the gasification process (7). The remaining condensate is evaporated and reused for drying. This alternative has no external water supply, instead it uses the moisture in the fuel.

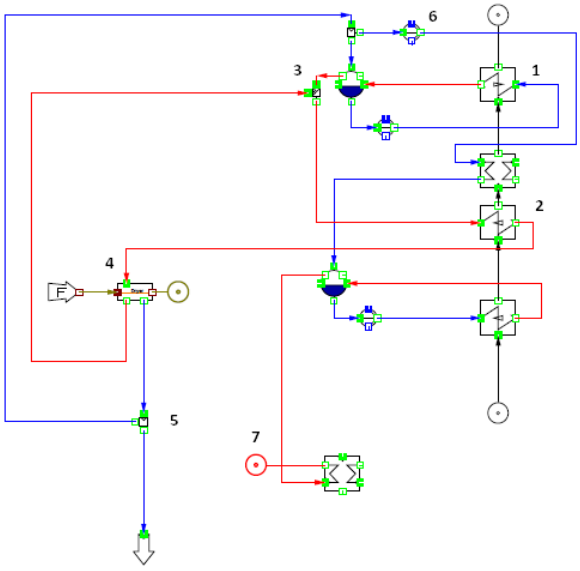

Figure 5-2. Description of the drying circuit for alternative 1.

5.5.2 Integrated fuel drying, alternative 2

In alternative 2 the steam used for the fuel drying is in a completely closed loop. The steam that is expelled from the fuel is used to preheat the water intended for the gasification process. It is also used for preheating the water in the steam cycle to the deaeration temperature and then it is discharged from the system. The condensate from the steam dryer is evaporated and superheated in the HRSG and then reused for drying. Water for the gasification process is added from an external source and preheated, partly by the steam from the dryer and partly by the HRSG. The evaporator and the superheater for the gasification steam are located in the HRSG.

5.6 Atmospheric BIGCC

The main difference between a pressurized and atmospheric BIGCC is that the atmospheric version will require further cooling and compression of the syngas before it can be supplied to the gas turbine.

Since the syngas will have a temperature in the region of 100°C before the compression this will lead to problems with the tars. At this temperature the tars will no longer remain in their vapour state. Therefore some kind of tar clean up has to be performed. Tar clean up is however not considered in this work since the formation of tars is very complex and difficult to model.

The configuration of the atmospheric BIGCC is similar to the pressurized BIGCC. However there are some differences. The air needed for the combustion chamber is not bled of from the gas turbine, instead it can be supplied from the surroundings. The combustion air is preheated in a double heat exchanger which also superheats the steam for the gasification process. Prior to the double heat exchanger an extra heat exchanger is located. This is intended for superheating a part of the steam to the steam turbine. The compression of the syngas is done in two steps with intercooling in order to minimize the compressor work. The heat recovered from the intercooling is used as an economizer for a part of the steam in the steam cycle. The flow sheet of the configuration can be seen in appendix B.

The pressure ratio of the two compressors was set according to:

$$\pi_{total} = \pi_1^n \tag{5.1}$$

Where π_{total} is the total pressure ratio, π_1 is the pressure ratio of the first compressor and n is the number of compressors. The pressure ratio in the first and second compressor is equal.

6 Results

6.1 Gasifier model

The model of the gasifier has been studied with different parameter values to evaluate its performance. This has been done by using PS Excel. Three parameters have been studied; pressure, temperature and steam to fuel ratio. The steam feed temperature to the gasifier and fuel inlet temperature has been set to 300°C and 15°C respectively. For these variations the fuel in table 6-1 has been used.

Table 6-1. Composition for the fuel used in the parameter study.

Component	Value [% weight]
C	42.48
H	5.20
O	36.12
N	0.47
S	0.05
Ash	0.68
Moisture	0.15

For the pressure variation the syngas composition along with the cold gas efficiency have been studied. The diagram below shows the influence of the pressure on the syngas composition when the pressure is varied from 2 to 25 bar. The syngas temperature is 750°C and exhaust gas temperature is 850°C.

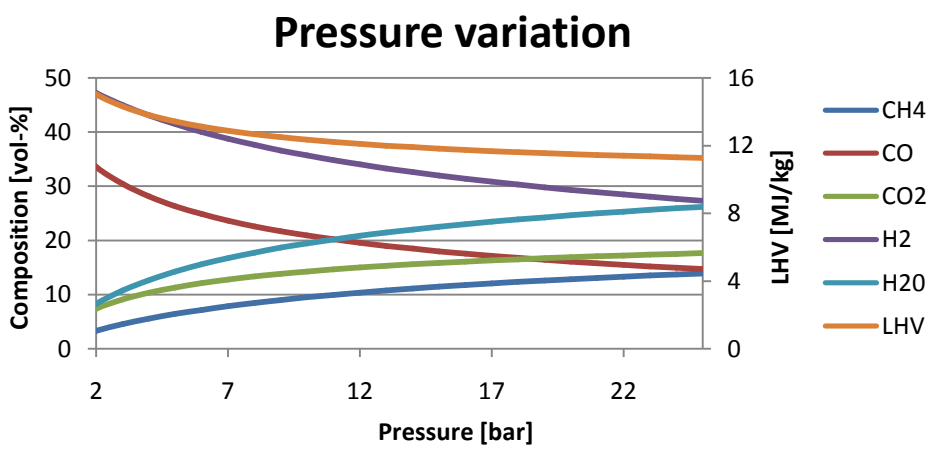

Diagram 6-1. Pressure variation in gasifier model.

The diagram shows that the CH_4, CO_2 and H_2O increases while H_2 and CO decreases. The heating value will decrease due to that H_2 and CO decreases more than the increase of CH_4 which has a negative effect on the heating value.

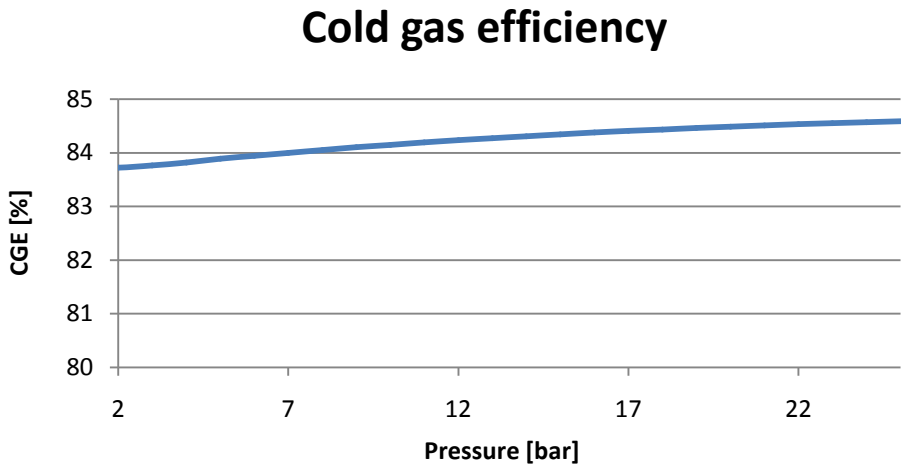

Diagram 6-2. The cold gas efficiency for different gasification pressures.

As can be seen in diagram 6-2 the cold gas efficiency increases slightly with an increased pressure.

The syngas composition is also of interest in the temperature variation. The effect of the gasification temperature on the syngas composition and the lower heating value was studied. The cold gas efficiency was also studied here. The variations can be seen in diagram 6-3 and diagram 6-4. The pressure in the gasifier was set to 20 bar. The exhaust gas temperature from the gasifier combustor was set 100°C higher than the gasification temperature.

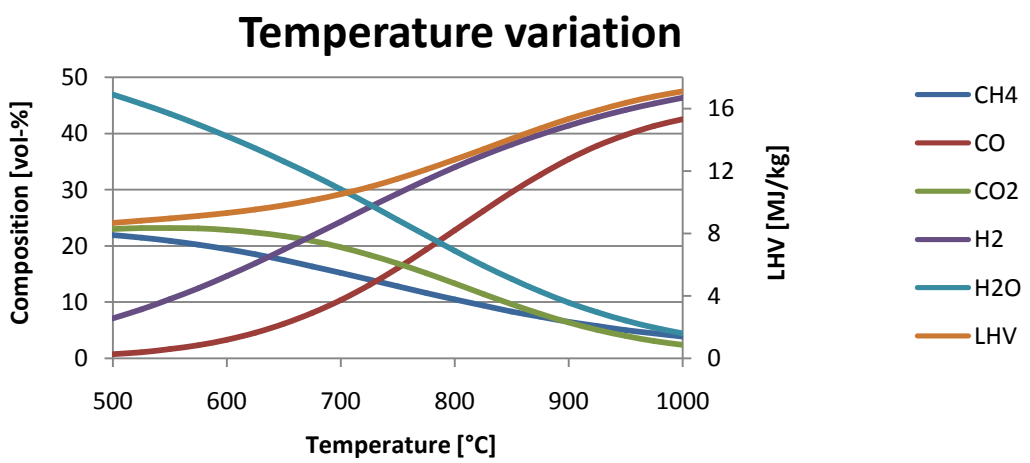

Diagram 6-3. Temperature variation in gasifier model.

The temperature variation shows that the amount of H_2 and CO increases and CH_4, CO_2 and H_2O decreases as the temperature is raised. The LHV of the syngas increases with temperature. This is because the increase of H_2 and CO and the simultaneous decrease of the H_2O and CO_2 fractions. It was noticed during the testing that the mass flow of steam to the gasifier became very small and eventually negative at syngas temperatures of 900°C and above.

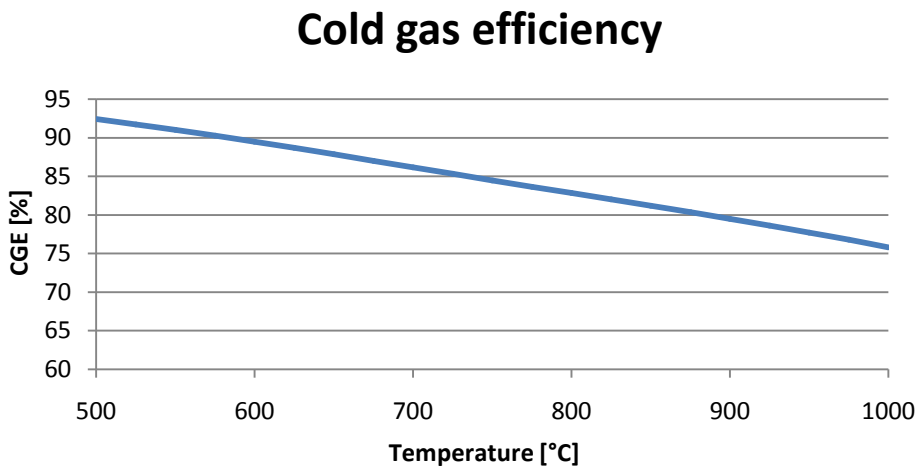

Diagram 6-4. The cold gas efficiency for different gasification temperatures at 20 bar.

The gasification temperature's influence on the cold gas efficiency is shown in diagram 6-4. As can be seen the efficiency decreases at higher temperatures.

Finally the steam to fuel ratio variation was done. Here the syngas composition as well as the gasification temperature was studied. The gasification pressure was 20 bar, the temperature difference between the gasification temperature and combustion chambers temperature was set to 100°C. The result from the variation can be seen in diagram 6-5.

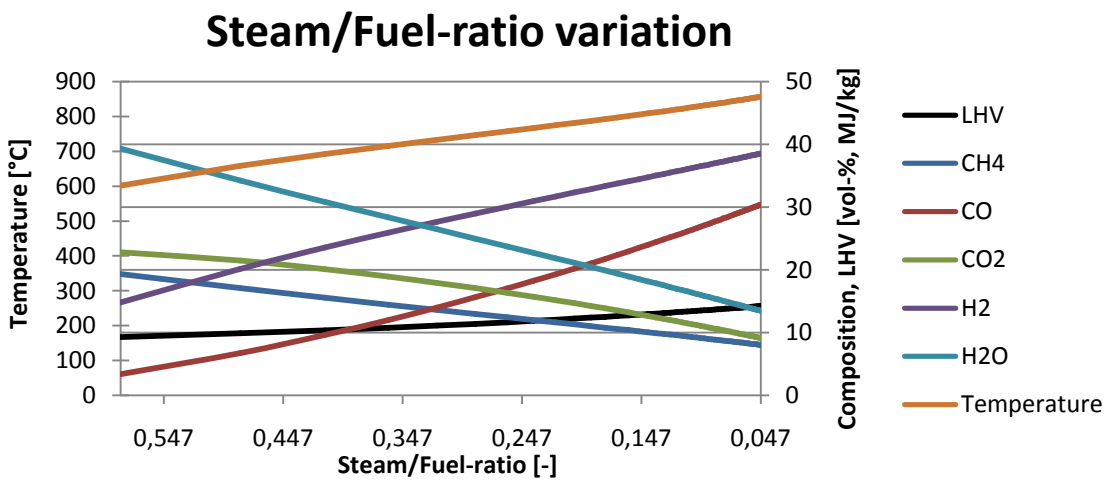

Diagram 6-5. Steam to fuel mass variation in the gasifier model.

As the amount of steam to fuel decreases, i.e. less steam or more fuel, the H_2- and CO-concentration increases and the CH_4-, CO_2- and H_2O-concentration decreases. The temperature in the gasifier increases from 600°C to 850°C when the steam to fuel ratio decreases. The lower heating value increases due to the favourable change of composition in the syngas.

6.1.1 *Atmospheric gasifier*

A temperature variation was performed to see how the composition changed with the gasification temperature during atmospheric pressure, the results are shown in diagram 6-6. At temperatures below 630°C there was no need for syngas recirculation to the combustion chamber. When the gasification temperature was raised more syngas had to be re-circulated. When the gasification temperature became higher all the coal from the biofuel was converted into permanent gases. Therefore the two equilibrium reactions for the homogenous case were used when the temperature became higher than 720°C.

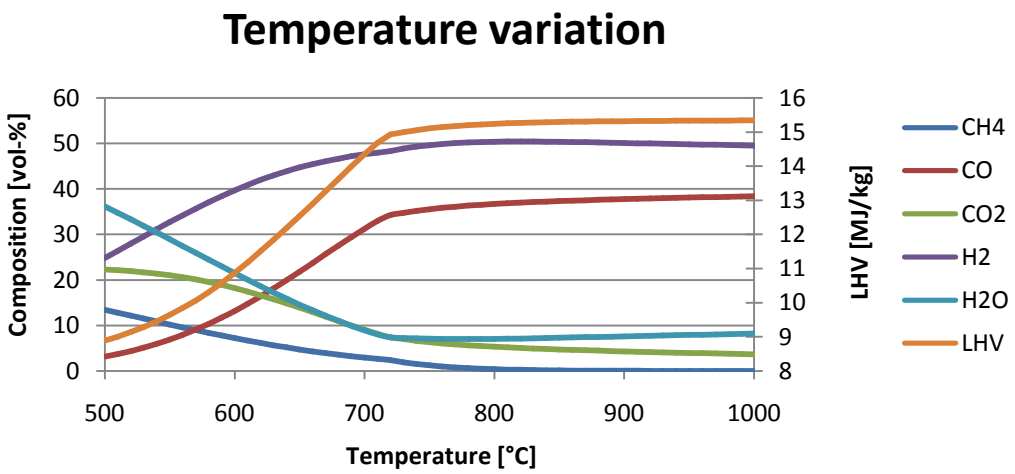

Diagram 6-6. The influence of the gasification temperature on the syngas composition.

The temperature influence on the cold gas efficiency is seen below.

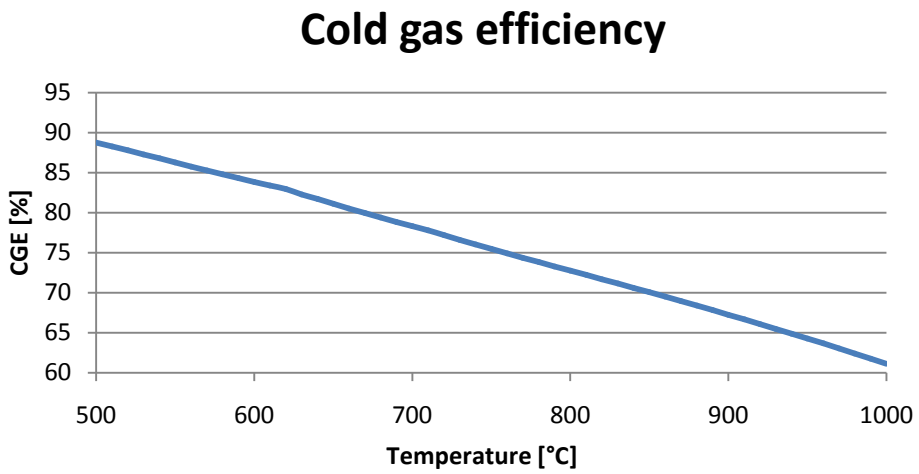

Diagram 6-7. The cold gas efficiency for different gasification temperatures at atmospheric pressure.

In diagram 6-7 it can be seen that the cold gas efficiency decreases with a higher gasification temperature.

6.2 Results for configuration A

The total net power output from the plant was 19.8 MW with an electric efficiency of 46.89%. The gas turbine produced 12.6 MW and the steam turbine 7.8 MW. The conversion factor in the gasifier was 0.792. The stack temperature was 97°C. The mass flow of exhaust gas through the gas turbine was 38.9 kg/s. The steam flow to the gasifier was 0.72 kg/s and the cold gas efficiency was 85.37%.

6.3 Results for configuration B

The total net power out from the plant was 19.3 MW with an electric efficiency of 45.83%. The gas turbine and the steam turbine produced 12.6 and 7.4 MW respectively. The conversion factor was the same as for configuration A, 0.792. This configuration had a much higher stack temperature of 125.4°C with the same turbine mass flow of 38.9 kg/s, this explains the lower efficiency. The steam flow to the gasifier was 0.72 kg/s and the cold gas efficiency was 85.37%.

6.4 Results for configuration C

This configuration gave a total net power output of 19.6 MW and an electric efficiency of 46.46%. The power output from the gas turbine was 12.6 MW and 7.6 MW from the steam turbine. The conversion factor was in this configuration also 0.792. The steam flow to the gasifier was 0.72 kg/s. The stack temperature was 108.6°C and the turbine mass flow 38.9 kg/s. The cold gas efficiency was 85.37%.

Because of that the gasifier operates under the same conditions in configuration A to C the syngas composition will be the same for the configurations. The syngas composition for the three configurations is shown in diagram 6-8 below.

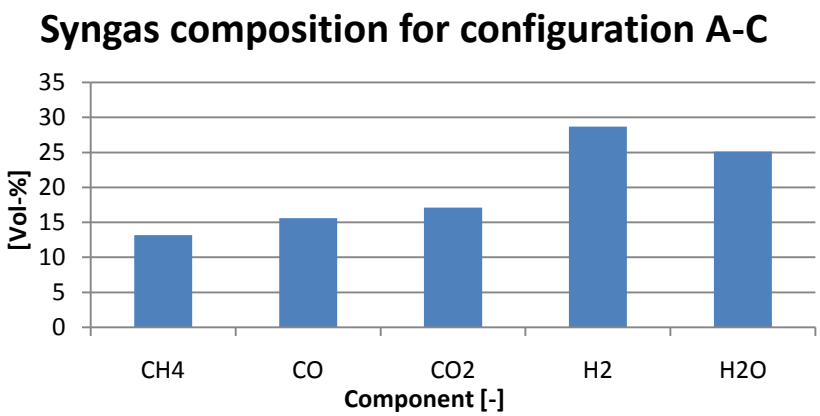

Diagram 6-8. Syngas composition for configuration A-C.

6.5 Parametric study for configuration A

Since configuration A gave the highest efficiency this configuration was used to study how different parameters influenced the performance of the plant. The different parameters that were studied were the syngas temperature at the hot gas filter inlet, the steam temperature at gasifier inlet and the operational parameters of the steam cycle, i.e. the live steam pressure and temperature.

6.5.1 Hot gas filter inlet temperature

The hot gas filter inlet temperature was varied to see the influence this had on both the total electrical efficiency and the gas turbine efficiency. The temperature was changed from 490°C to 650°C. The stack temperature was also observed to evaluate the effect on the steam cycle. The effects are shown in diagram 6-9.

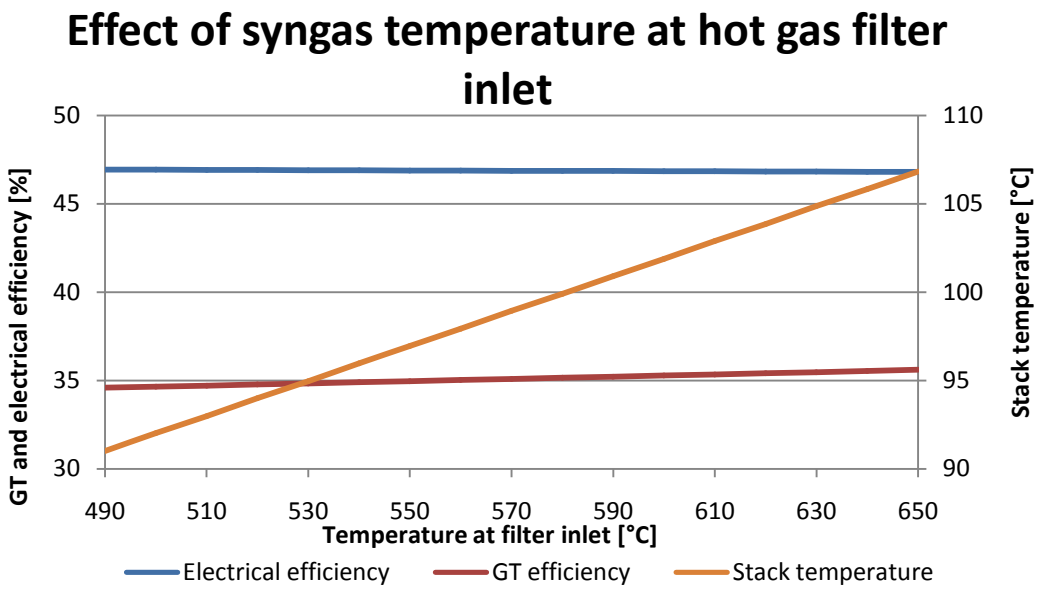

Diagram 6-9. Effect of changes in syngas temperature at the hot gas filter inlet.

As shown in diagram 6-9 the filter inlet temperature has a small influence on the electrical efficiency. The gas turbine efficiency however increases somewhat with increasing filter inlet temperature. The stack temperature also increases with a higher filter inlet temperature.

6.5.2 Gasification steam temperature

The temperature of the steam used for the gasification was varied to study the effects on the electrical efficiency. The result is shown in diagram 6-10.

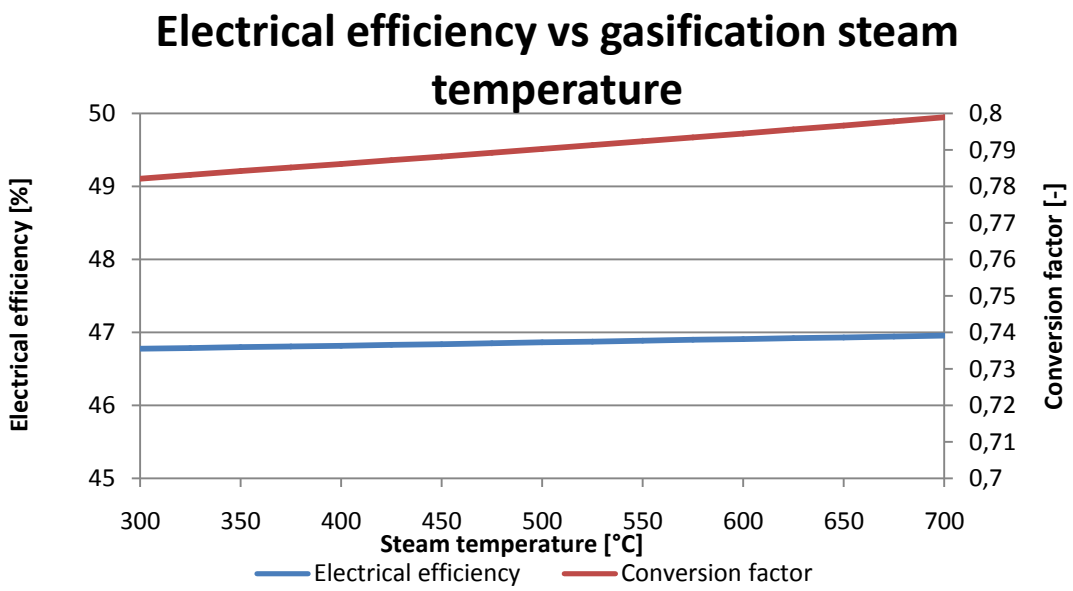

Diagram 6-10. The gasification steam temperatures influence on the electrical efficiency.

With a higher steam temperature a slight increase of the electrical efficiency was obtained together with an increase in the conversion factor.

6.5.3 Steam cycle parameters

The inlet pressure to the steam turbine was studied to see its influence on the electrical efficiency. The result is shown in diagram 6-11. This was done with a constant steam temperature of 565°C.

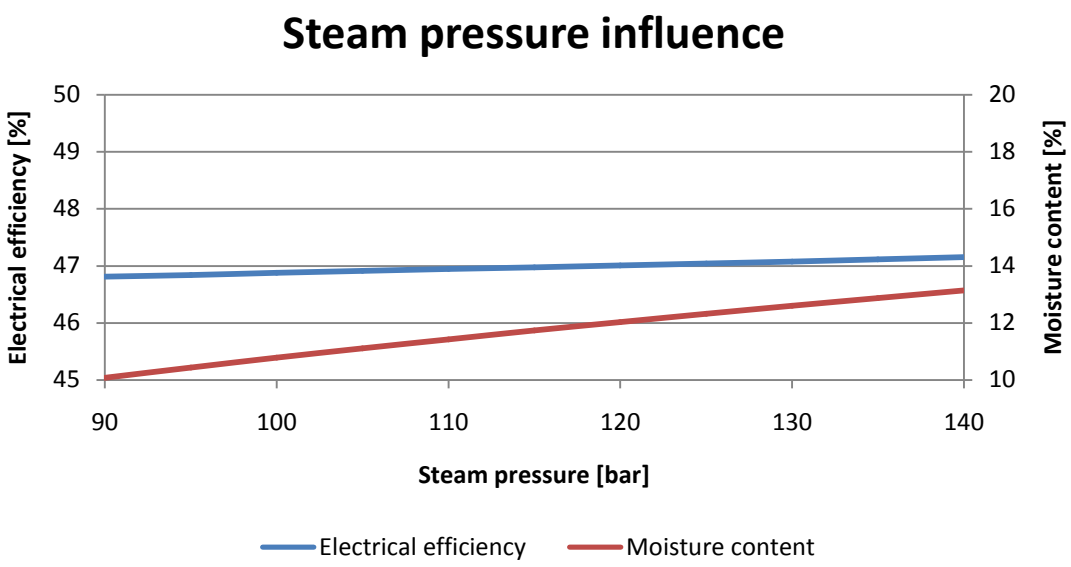

Diagram 6-11. The steam turbines inlet pressure influence on the electrical efficiency.

The steam turbines inlet temperature was also varied to study the effects on the electrical efficiency. This was done with the steam turbines inlet pressure set to 100 bar. The pinch-point in the evaporator had to be changed in order to avoid crossing temperature lines in the T-Q-diagram. The effect of the steam temperature is shown in diagram 6-12.

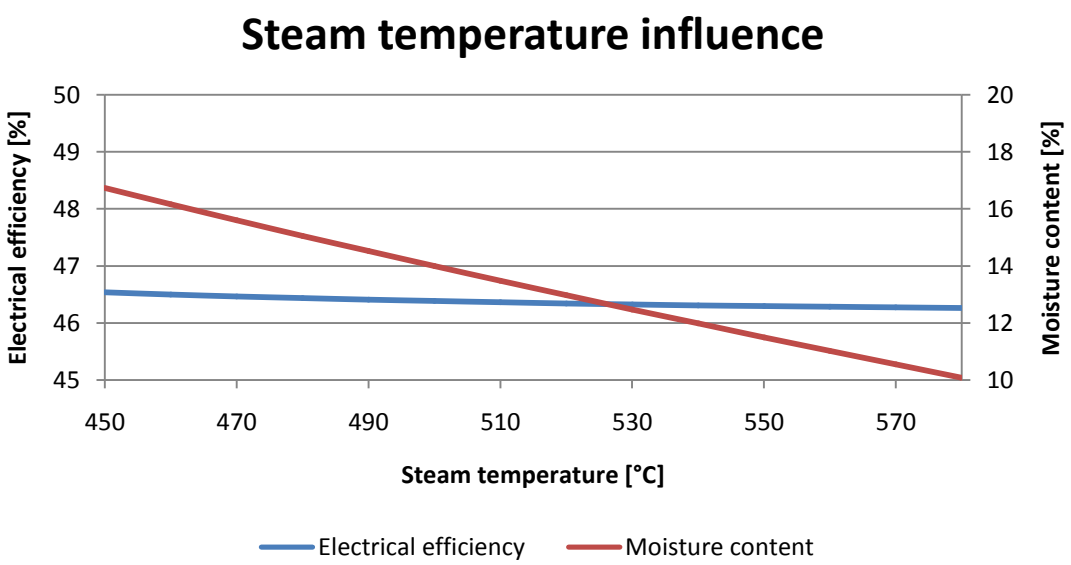

Diagram 6-12. The steam turbines inlet temperature influence on the electrical efficiency.

6.6 Results for the BIGCC-plant with integrated fuel drying

The two alternatives for the integrated drying were evaluated with two different levels of moisture content in the fuel. The results are shown in table 6-2 below.

Table 6-2. The results for the two alternatives of integrated fuel drying.

	Alternative 1		Alternative2	
Moisture content	40%	50%	40%	50%
Electrical efficiency	48.85%	51.47%	48.77%	49.30%
Gas turbine power output	12.6 MW	12.6 MW	12.6 MW	12.6 MW
Steam turbine power output	7.3 MW	7.3 MW	7.3 MW	6.5 MW
Total net power output	19.3 MW	19.3 MW	19.2 MW	18.5 MW
Pinch-point evaporator	25°C	25°C	25°C	55°C
Stack temperature	122°C	115°C	106°C	105°C
Cold gas efficiency	85.84%	85.84%	85.84%	85.84%

The electrical efficiency increased with increased moisture content even though the steam turbine power output decreased. For alternative 1 the flow in the drum to the dryer's evaporator became very small.

6.7 Atmospheric BIGCC

Two different approaches were tested when the atmospheric BIGCC was evaluated. The first alternative was to allow an increase in the gas turbine mass flow and the second alternative was to have a drain from the gas turbines compressor. Thereby the mass flow through the gas turbine could be kept as for the design case.

Table 6-3. Results for the atmospheric BIGCC.

	Increased gas turbine mass flow	Design gas turbine mass flow
Electrical efficiency	43.34%	41.94%
Gas turbine power output	13.9 MW	12.6 MW
Steam turbine power output	10.7 MW	10.2 MW
Total net power output	21.6 MW	20 MW
Gas compressor consumption	2.9 MW	2.8 MW
Stack temperature	91°C	91°C
Cold gas efficiency	77.05%	77.05%

7 Discussion

7.1 Gasifier model

The results from the pressure variation in diagram 6-1 regarding the syngas composition are what one would expect. This is because when looking at the equilibrium constants, for example for the methanation reaction, it is dependent on the pressure according to:

$$K_p = \frac{X_{CH_4}}{X_{H_2}{}^2}\frac{p^0}{p}$$

This gives that the concentration of methane will increase with an increasing pressure and that the hydrogen will decrease. This is due to that for a given temperature the value of K_p has to be constant.

The lower heating value decreases with a higher pressure due to that the H_2, CO and CH_4 becomes a smaller part of the total composition and the other components, CO_2 and H_2O, have a negative influence on the heating value. The three mentioned components contain different amounts of energy, for example CH_4 contributes with more energy per volume than CO. So with an increasing concentration of methane as the pressure is raised this would have a positive effect on the heating value but as the concentration of H_2 and CO also decreases the resulting effect is a decrease in the lower heating value.

In the literature survey it was found that the gasification temperature in a char indirect, two-stage gasifiers with steam reforming was between 600-1000°C. The difference is that these figures are for an atmospheric gasifier while the modelled gasifier is pressurized. Therefore a parametric study was done where the gasification temperature influence on the syngas composition was studied. The gasification temperature variation showed the same behaviour as Fredriksson Möllers [36] which was expected because a similar method of modelling was used. The syngas composition changes due to that the equilibrium constants changes. This corresponds to that the reactions becomes faster at higher temperatures.

The model showed small or negative mass flows of steam at high temperatures. The reason for this is that at high temperatures the gasification process requires a certain amount of energy, in form of heat from the combustion chamber. This heat is supplied by combusting a part of the carbon from the biomass feedstock. A higher gasification temperature therefore means that less carbon is converted. This also gives less carbon is present in the syngas. The equilibrium equations will then require a decrease in hydrogen and oxygen to maintain the equilibrium between the carbon and oxygen/hydrogen. To keep a realistic flow of steam for fluidizing the bed in the gasifier, a part of the syngas must be circulated to the combustion chamber.

Steam enters the gasifier with a lower temperature than the temperature in the gasifier which results in that energy is needed to raise the steam to the gasification temperature. This is the reason why the temperature increases with a lowered steam to fuel ratio as shown in diagram 6-5. Different steam to fuel ratios give different mass flow of carbon to the combustion chamber i.e. the conversion factor will change and thereby also different heating value, mass flows of syngas and heat flow to the gasification process from the combustor will be obtained. This will result in different gasification temperatures and thus give different syngas compositions.

The behaviour of the cold gas efficiency and its dependence on the gasification temperature and pressure was studied. For the pressure variation the cold gas efficiency increased with an increasing pressure. This can be explained by that when the pressure is increased the mass flow of steam to the gasifier increases. So although the LHV decreases with a higher pressure the increase in the syngas mass flow contributes to a slight increase in the cold gas efficiency. The reason for the decrease of the cold gas efficiency with the increase in temperature is that more energy is needed to raise the temperature of the input material to the gasification temperature. The steam mass flow to the gasifier also decreases with an increased temperature which lowers the total syngas mass flow and thereby the total energy flow.

When the literature survey was performed there were not much work found on the pressurized indirect gasification concept. And since this concept never has been built no test results can be obtained. Therefore it has been hard to validate the results of the gasifier model. But with the comparison of results with Fredriksson Möller [36] along with the testing and variations the result for the indirect gasification model seems realistic and satisfying. The equilibrium constants that has been calculated has been compared to those found in the literature and found to be in accordance with these.

7.1.1 Atmospheric gasifier

As seen in diagram 6-6 the product gas composition varies largely at low temperatures, this is due to that the carbon steam ration varies along with the temperature. Above 720°C the fuel to steam ratio is constant, and the conversion factor is also constant. Therefore the changes in the syngas composition become smaller and are only related to the change in temperature. The concentration of methane was much lower compared to the pressurized gasification. This is because of the fact that a high pressure shifts the equilibrium to a higher concentration of methane which can be seen in Eq. 3-11.

The cold gas efficiency for the atmospheric gasifier shows the same tendencies as the pressurized process but is slightly lower due to the re-circulation of syngas. The reason for the re-circulation of the syngas to the combustion chamber is that more energy is needed to maintain the gasification temperature. At atmospheric pressure the gasifier showed the same behaviour as the pressurized gasifier did at high temperatures. However for the atmospheric gasifier this becomes more visible already at lower temperatures. Less energy is supplied from the gasification steam. This is because the steam pressure is atmospheric and thereby it can't be superheated to the same temperature as when pressurized without very large heat transfer areas. Also at a lower pressure the water in the fuel will require more energy in order to be evaporated.

7.2 Gas turbine performance

For configuration A-C the flow of exhaust gas from the gas turbine has been fairly constant. The flow has been somewhat lower than the exhaust gas flow for the design case. This indicates that bleeding air from the compressor outlet can be a successful strategy for handling the problem with an increased fuel mass flow. The amount of air extracted from the compressor is dependent of the amount of carbon converted in the gasifier reactor. If a greater amount of carbon is gasified then less char is transported to the combustion section of the gasifier and less amount of air is needed to ensure complete combustion.

As seen in diagram 6-9 the gas turbine efficiency increased as the temperature of the syngas supplied to the gas turbine was raised. However care has to be taken when evaluating the efficiency of the gas turbine. For configuration A-C a higher gas turbine efficiency was obtained even though the mass flow of combusted gases through the turbines was somewhat lower than in the design case. The higher efficiency could be explained by the fact that the temperature of the fuel supplied to the gas

turbine is very high. However the fact that the gas turbine is running in “off-design” mode, i.e. the mass flow through the turbine is lower than for the design case, isn’t considered in the model.

Another important issue is the fact that the mass flow of fuel that has to be supplied to the gas turbine is around 4 times higher than the mass flow when using natural gas as fuel. This will require extensive modifications of the fuel system. The gas turbine used at the Värnamo BIGCC-plant required a completely separate fuel gas module when operating on syngas [15]. The high temperature of the syngas is another factor that has to be considered when using the gas turbine. Thermodynamically a higher temperature of the gas would enable lower fuel consumption and thus improving efficiency but the high temperature has to be considered when designing the fuel system.

When increasing the mass flow through the gas turbine the safety margin towards surge decreases and problems with the gas turbine may occur more frequently. This is not considered in the gas turbine model and will only result in an increased power output from the gas turbine due to the increased mass flow through the turbines.

7.3 Evaluation of configuration A-C

In configuration A the extra heat from the syngas is used to superheat a part of the steam in the steam cycle. What happens is that the evaporator will receive more energy and is able to increase the mass flow in the steam cycle. This increases the mass flow in the steam turbine and thereby more electricity is produced which leads to that more energy from the exhaust gas is used. This results in a low exit temperature of 97.1°C from the HRSG and an increased efficiency. If the temperature after the syngas cooler is lowered there is more energy for the steam cycles evaporator and the steam flow is further increased. A problem occurs when too much steam is superheated in the syngas cooler. What then happens is that the steam evaporator will require so much energy that there won’t be enough energy left in the exhaust gases for the downstream heat exchangers in the HRSG.

The T-Q-diagram, diagram 7-1, for the syngas cooler in configuration A shows that the temperature for the steam cycle and gasification steam is in the same region and near the syngas temperature. By using the energy from the syngas to the warmest part of the steam cycle the potential of the syngas energy is maximized. This means that the energy from the syngas cooler is used in the best way.

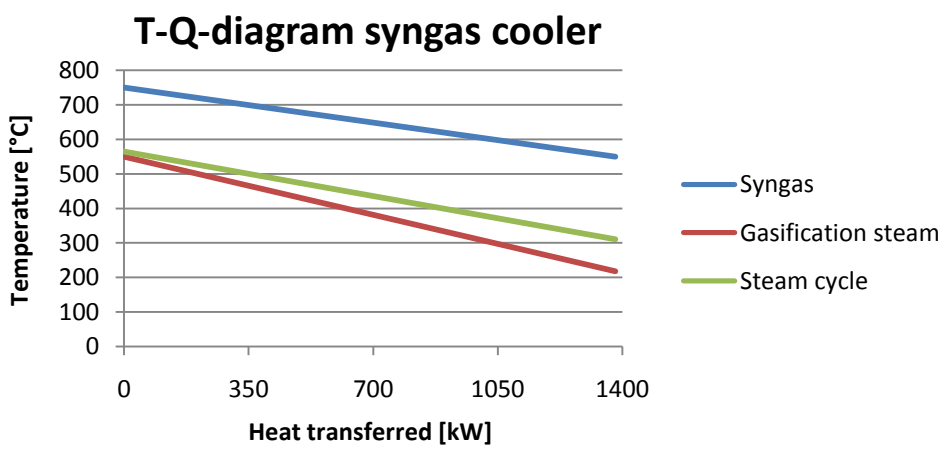

Diagram 7-1. The T-Q-diagram for the syngas cooler in configuration A

With the configuration B the extra heat from the syngas is used to preheat the water in the steam cycle. This was done due to the problem that occurred when the evaporator required too much energy. The electrical efficiency is lower than in configuration A because of a lower steam flow through the steam turbine but this configuration allows a larger change in energy transfer in the syngas cooler which also means that the exhaust gas temperature from the gasifier can vary more. The HRSG's exit temperature is higher than in configuration A which means that more energy goes to waste.

Configuration C is a compromise between a high efficiency and a high flexibility. The mass flow of steam to the gasifier is determined by the gasifier. Therefore the amount of energy to superheat the product steam is the same. Because of the higher temperature after the first syngas cooler the steam flow to the steam cycle is decreased due to that the syngas cooler isn't able to superheat the same amount of steam. The second syngas cooler transfers the rest of the energy to the steam cycle's economizer. This allows a larger energy transfer to the steam cycle from the syngas and the syngas temperature before the hot gas filter can be kept constant if the gasification temperature increase.

Configuration A has the highest efficiency and shows a satisfying flexibility for different operating parameter, so this is considered as the best configuration for the integration of the gasifier. Configuration C also shows good results for the efficiency and an even better flexibility than configuration A. However the electrical efficiency is somewhat lower and this concept also requires an extra heat exchanger which will increase investment costs. A second downside with the second heat exchanger for cooling the syngas is that the syngas cooler is one of the most vulnerable components in the whole BIGCC-plant. Therefore with the introduction of an extra syngas cooler this could cause extra downtime to the plant and thus decreasing the availability of the plant.

Another important consideration is that all these configurations consume water for the gasification process. The flue gas from the combustion chamber of the gasifier has a high temperature and pressure. An option would be to install some type of a small radial turbine to utilize this energy. However this could perhaps require cleaning and treatment of the gas which means that the temperature must be decreased. With a lower inlet temperature the specific work for the turbine will decrease and the contribution from such a turbine would be small compared to the practical issues surrounding it. Instead the heat from the flue gas is recovered in the HRSG but the useful work from the elevated pressure is lost.

7.4 Influence of different operational parameters

7.4.1 Effects of different hot gas filter temperature

The hot gas filter is an important component in the BIGCC-plant to avoid operational problems with the gas turbine. It is also one of the most exposed components in the plant, receiving dirty syngas at high temperatures. Therefore it was interesting to study how the operation temperature for the filter could influence the overall performance of the plant.

It was seen that if syngas at a higher temperature could be supplied to the gas turbine this would improve gas turbine efficiency, as shown in diagram 6-9. This is because less energy is needed to raise the syngas to the combustion temperature. However as diagram 6-9 also show the total electrical efficiency remains almost constant for the whole temperature range despite the increase in gas turbine efficiency. The reason for this is that if less heat is extracted from the syngas in the syngas cooler the mass flow of superheated steam to the steam turbine will decrease. This is why the stack temperature increases with a higher filter inlet temperature. Because of this maybe a lower working temperature for the filter would be appropriate to avoid material issues due to high temperatures. However the syngas temperature still has to be high enough for keeping the tars in their vapour state.

The Värnamo BIGCC-plant has used the technique of hot gas filtration and tested both a ceramic and a metallic filter. Both the ceramic and the metallic filter showed good result for filtration of the syngas but with the ceramic filter material failure was detected [7].

7.4.2 Effects of the gasification steam temperature

As seen in diagram 6-10 the electrical efficiency increases as the gasification steam temperature is raised. The increase is however quite modest. The reason for the increase can be explained by the fact that when the steam temperature is raised this results in a higher energy flow to the gasifier, i.e. more heat is supplied to the gasification process. If more heat is supplied to the process a larger amount of carbon can be gasified, this is because the need for the heat supplied through the external combustion decreases. The increase in the conversion factor is also seen in diagram 6-10.

A consideration in this case is that these high temperatures may cause material problems in the equipment.

7.4.3 Effects of steam cycle parameters

The current model of the steam turbine doesn't consider what happens when the moisture content is increased, it will give the same result independent of the moisture content in the steam turbine exhaust. Too high moisture content will however lower the performance of the steam turbine. A limit of around 16% moisture content is required to avoid problems with erosion in the last stages of the steam turbine [42]. When the steam pressure is increased less energy is needed for the evaporation of the water and thereby the electrical efficiency is raised. However the moisture content is also increased. By increasing the steam temperature a lower moisture content can be achieved but at the cost of a decrease in the electrical efficiency. The decrease in the electrical efficiency is explained by the fact that when the steam is evaporated to a higher temperature energy which could be used for steam production in the evaporator is removed. Even though a larger enthalpy drop is achieved in the steam turbine the first effect will be dominating. When choosing the steam temperature and pressure this is a compromise between power production, an efficient heat transfer in the HRSG and the moisture content in the steam turbines exhaust. The choice of steam parameters is however mainly an economic consideration. High pressures and temperatures will require larger investments, for example in the form of more advanced steam turbines and larger heat exchanger surfaces. The upper limit for the steam temperature is determined by the material used in the steam turbine and the upper limit is somewhere around 565°C. The length of the turbine blades in the first stage will also be a limiting factor. With a high pressure a smaller flow area is needed and thereby the turbine blades will become very small.

7.5 BIGCC with integrated fuel drying

Although the power production was decreased when the steam dryer was introduced the electrical efficiency increased quite dramatically. This is explained by the fact that the electrical efficiency is based on the lower heating value of the biofuel. The lower heating value considers the amount of water in the fuel and the energy required for the evaporation of this water (see Eq. 3-19). When the moisture content is increased this will render in a much lower LHV for the biofuel and although the mass flow of fuel is increased the total energy input will be lower than with a dryer fuel. However since the fuel is dried to the same moisture level as for the BIGCC-plant without fuel drying, the energy flow to the gasifier will be the same if the same fuel is used. This is because the gas turbine will still require the same amount of fuel for maintaining the specified turbine inlet temperature for the given mass flow of air. But since the fuel entering the system has a higher moisture content the energy flow into the system will be lower. This is illustrated by a simple calculation example in table 7-1 where the energy flow for the same fuel but with different moisture content is calculated.

Table 7-1. Energy flows for fuels with different moisture contents.

	Without fuel drying	With fuel drying	
Moisture content	15%	40%	50%
LHV	15.7 MJ/kg	10.6 MJ/kg	8.23 MJ/kg
Mass flow	2.69 kg/s	3.73 kg/s	4.55 kg/s
Energy flow	42.2 MW	39.5 MW	37.4 MW

7.5.1 Integrated fuel drying, alternative 1

When the moisture content in the fuel was 40% the resulting T-Q-diagram for the HRSG became as shown in diagram 7-2 below.

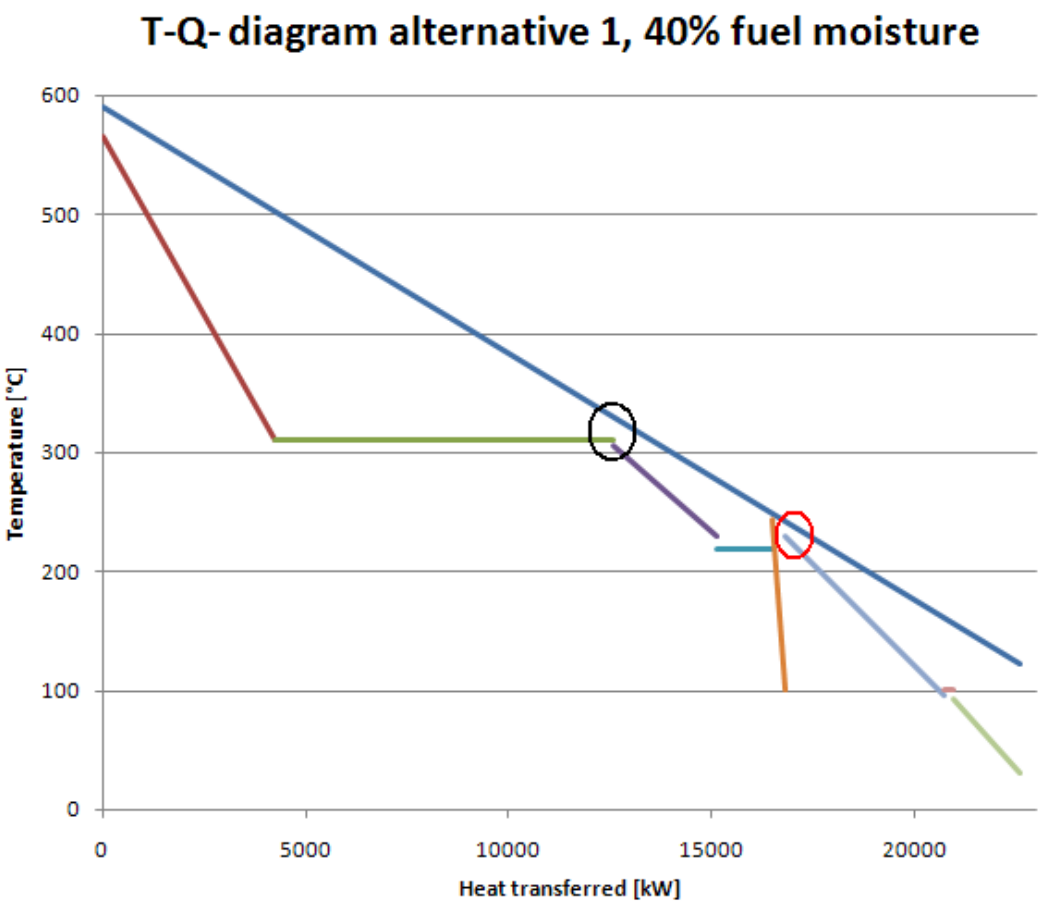

Diagram 7-2. T-Q-diagram for the HRSG in alternative 1, fuel moisture 40%.

The explanation to the decrease in power output compared to configuration A is that the pinch-point in the evaporator is increased, shown by the black circle in diagram 7-2. The pinch-point has to be increased in order to meet the increased requirement of energy further downstream in the HRSG. By increasing the pinch-point the total mass flow to the steam turbine is decreased thereby lowering the power output. Since the pinch-point in the superheater for the drying steam is set to 10°C it will be the double heat exchangers temperature line that will cross the temperature line of the exhaust gas, this is show by the red circle in the diagram 7-2.

When the moisture content of the fuel was increased to 50% for alternative 1 the resulting T-Q-diagram became accordingly to diagram 7-3.

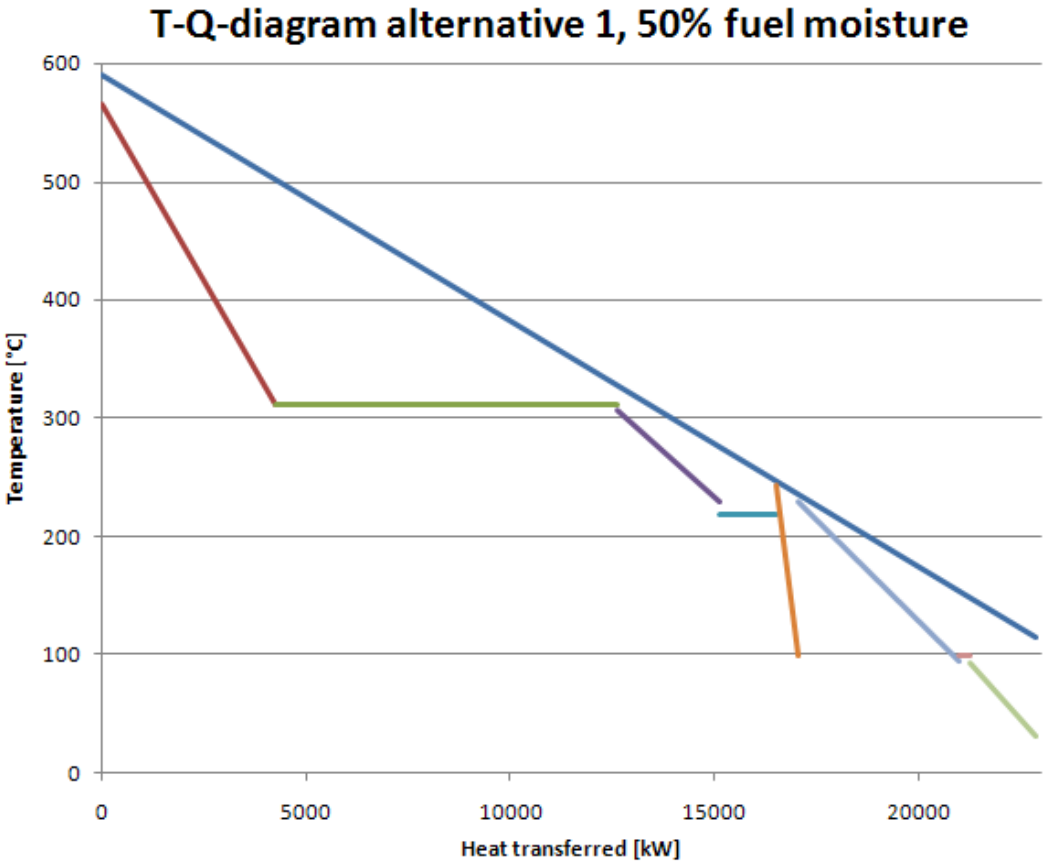

Diagram 7-3. T-Q-diagram for the HRSG in alternative 1, fuel moisture 50%.

The T-Q-diagram for the HRSG does not change dramatically when the moisture content is increased. Because of the increased moisture content of the fuel the energy required for drying increases. This gives a larger mass flow in the drying circuit and thereby more energy is extracted from the exhaust gases. This explains the decrease in stack temperature and the pinch-point for the double heat exchanger. This is however only affecting the components downstream of the steam cycle evaporator in the HRSG. Therefore the same amount of energy can be transferred to the steam cycle and thus the power output will be the same. Because of the lower LHV of the fuel the efficiency will increase drastically.

7.5.2 Integrated fuel drying, alternative 2

The HRSG's T-Q-diagram for alternative 2 is shown in diagram 7-4.

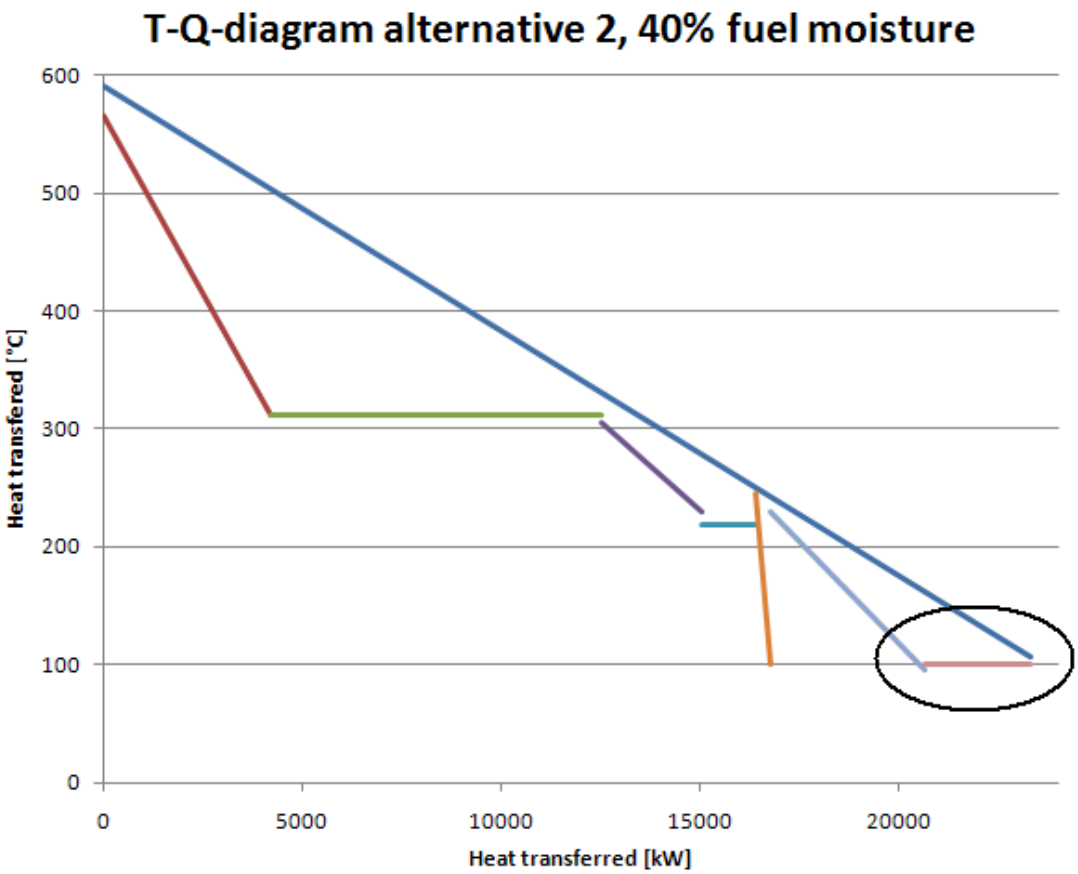

Diagram 7-4. T-Q-diagram for the HRSG in alternative 2, fuel moisture 40%.

Just as for alternative 1 the pinch-point in the evaporator has to be increased. Thereby there will be a loss in power production from the steam cycle. The component that limits the power production and thereby also the evaporator's pinch-point is the evaporator for the drying steam which is placed last in the HRSG.

When the moisture content of the fuel is increased the amount of water that has to be evaporated increase, this can be seen in diagram 7-5.

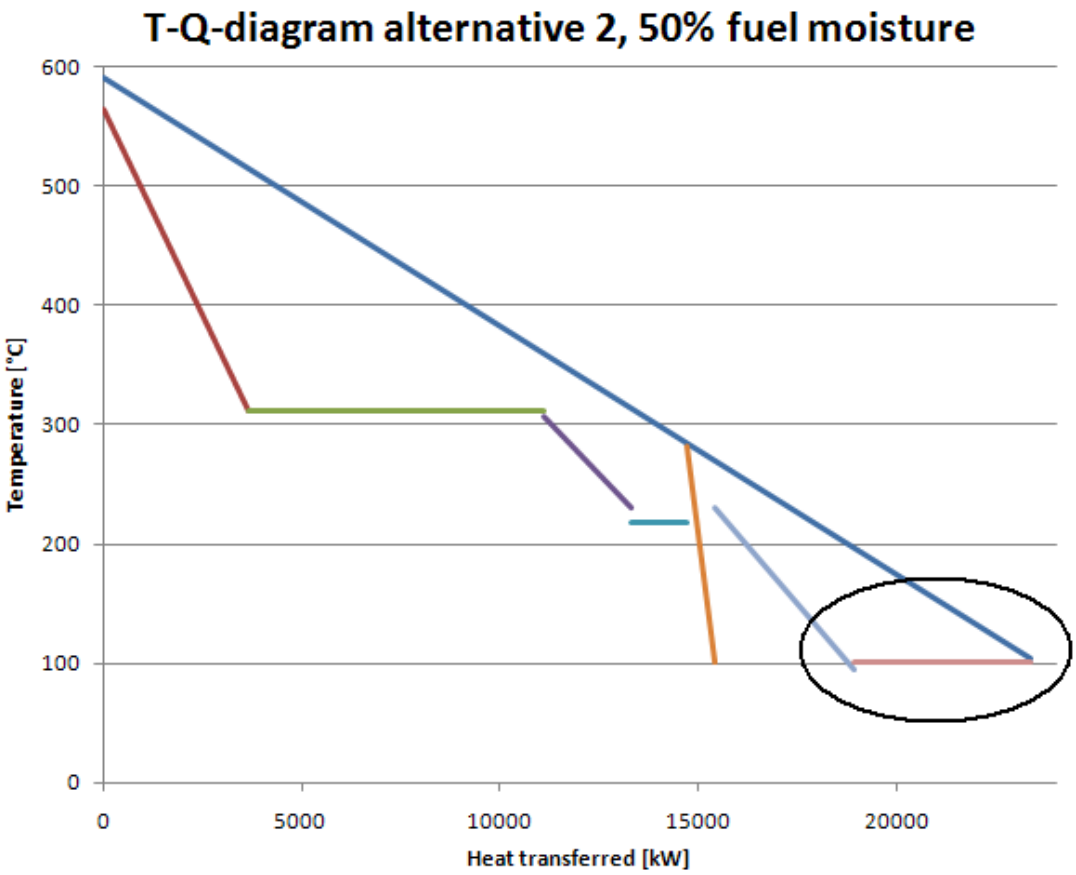

Diagram 7-5. T-Q-diagram for the HRSG in alternative 2, fuel moisture 50%.

The amount of heat that is needed to be transferred to the drying steams evaporator has a great impact on the pinch-point in the steam cycles evaporator and thereby also the power output. To be able to dry the wet fuel the pinch-point had to be more than twice as large as for the fuel with 40% moisture. Such a large pinch-point in the evaporator would cause larger exergy losses and therefore this configuration is not appropriate for moisture contents much higher than 40%.

7.5.3 General discussion concerning integrated drying

Overall a satisfying integration of the dryer has been hard to achieve. The integration will result in several new components such as heat exchangers and drums thereby increasing the complexity of the system.

For alternative 1 there is no need for an external water supply but due to the mixing of the evaporated moisture and the steam for drying a build-up of contaminants in the drying steam may occur. This may lead to several operational problems such as corrosion, filter plugging, a decrease in heat transfer capacity etc. Preferably the steam produced from the dryer would be injected directly into the gasifier perhaps after superheating. This would however require that the drying would take at place at pressure levels of those in the gasifier and this could be a very difficult practical problem to solve. Another option is to condense the steam from the fuel, pressurize the condensate, evaporate and superheating it, before injecting it into the gasifier. The steam from the drying could also be pressurized directly but as this would consume large amounts of energy this option doesn't seem realistic. If atmospheric gasification was used the use of the steam from the fuel dryer maybe had been much easier to use in the gasifier. The flow to the dryer's evaporator became very small and therefore this may not be the best way for supplying saturated steam to the drying circuit.

A benefit for alternative 2 is that the steam for the drying is in a completely closed loop. However the steam supplied to the dryer will require larger amount of energy from the HRSG. Also there is a larger energy loss when the steam generated in the dryer is rejected from the system. Even though energy is transferred back to the system, by preheating water intended for the gasification and the water to the deaerator, the flow from the dryer will leave the system as a mixture of steam and water. This solution will also require an external water supply to the gasification process.

For both of the alternatives excess water and/or steam will be generated. This could be a potential problem since this water/steam may require special treatment before disposal.

If a dryer should be integrated the decision between power output and electrical efficiency should be considered. Another aspect is the fuel cost versus the cost of the fuel dryer. With an integrated fuel dryer a lower quality fuel could be used but at the price of a more complex and expensive plant. If fuel with a higher quality is chosen this could admit a less advanced configuration but with higher operational costs in terms of fuel prices.

7.6 Atmospheric BIGCC

Due to the higher mass flow through the gas turbine its power output increases. The steam turbine also shows higher power outputs compared to the BIGCC with pressurized gasification. This can be explained by the fact that when the syngas is re-circulated to the combustion chamber more air is needed in order to ensure complete combustion. Thus the flow of flue gas from the combustion chamber will increase and thereby the total flow in the HRSG will increase. More energy is thereby possible to transfer to the steam cycle. The total mass flow in the steam cycle is therefore increased, giving a higher power output from the steam turbine. This is also why the steam turbine has a somewhat lower power output compared to when the mass flow through the gas turbine is higher.

The electrical efficiency was lower than when pressurized gasification was employed. This can be explained by the fact that re-circulation of the syngas has been introduced. This will lower the efficiency of the gasification process and thereby reducing overall efficiency. The work needed for the compression of the syngas along with the lower temperature of the combustion air will also have a negative effect on the overall efficiency.

The T-Q-diagram for the atmospheric BIGCC is shown in diagram 7-6. It shows that the total amount of energy transferred to the steam cycle is larger than for the pressurized alternative.

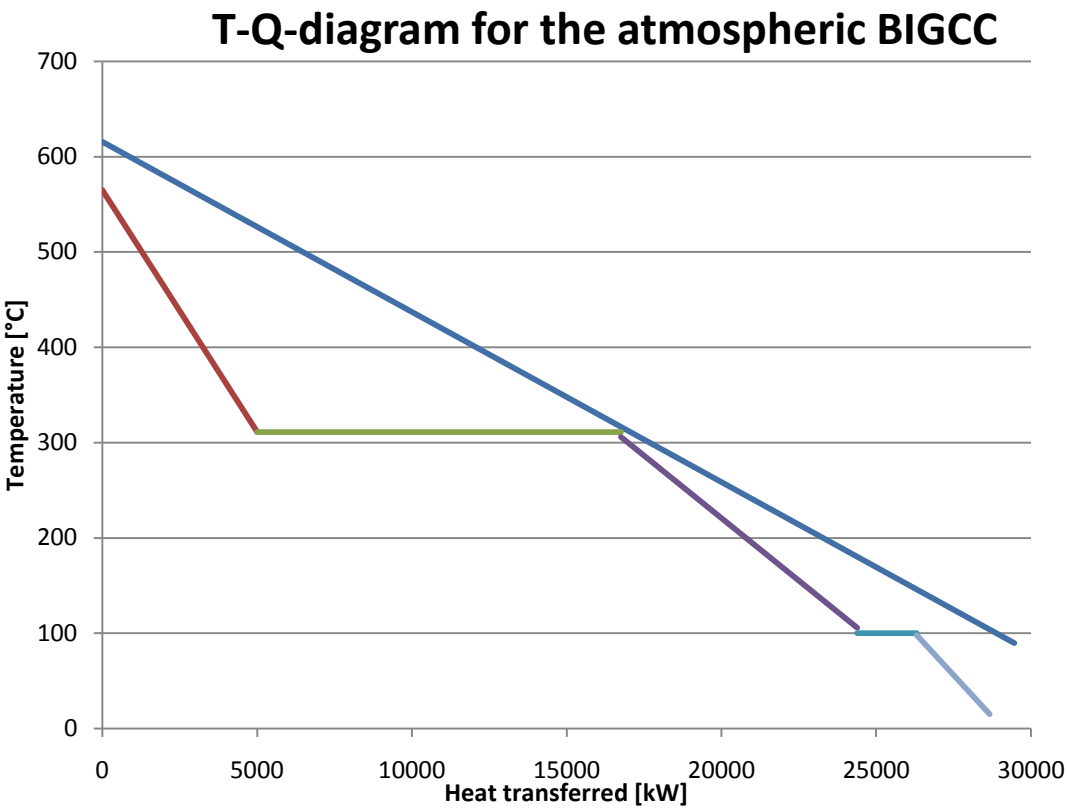

Diagram 7-6. The T-Q-chart for the atmospheric BIGCC.

8 Conclusions

It has been seen that the electrical efficiencies of BIGCC-plants has been higher than for conventional bio-fuelled power plants. Electrical efficiencies in the region of 45-50% have been obtained for the different configurations developed and tested in this thesis. However pressurized gasification is still a commercially unavailable technology requiring many practical problems to be solved.

Even though an equilibrium model of a gasification process only is an approximative estimation of the actual process it is well suited for overall thermodynamic calculations. By such overall calculations different strategies can be compared and evaluated from thermodynamic, practical and economical points of view.

The models showed promising results when it came to handling the increased fuel mass flow to the gas turbine. The amount of air that was bled of from the compressor was in the same region as the increase in fuel flow, keeping the mass flow through the turbine fairly close to the design value. This was valid for several different operation conditions of the gasifier. This strategy requires a relatively easy modification to the gas turbine for it to be able to operate on syngas.

For a BIGCC-plant without fuel drying it was found that the best way of utilizing the sensible heat in the syngas was for superheating part of the steam for the steam turbine. The corresponding temperature levels results in a high potential.

When a fuel dryer was integrated the electrical efficiency increased. With the current definition of the electrical efficiency based on the lower heating value of the fuel the results will be somewhat misguiding. This is especially obviously for alternative 2 when the fuel had a moisture content of 50%. Even though the power production decreased drastically compared to configuration A, the electrical efficiency became much higher. For alternative 1 this was also noticed when going from a fuel moisture of 40% to 50%. By simply adding water to the fuel the electrical efficiency will rise. However this definition is what is used in the industry when comparing different plants and technologies to each other. It may be worth reconsidering the definition of the electrical efficiency when the drying is integrated in the overall process.

When introducing a fuel dryer the plant configuration becomes more advanced. There could be problems with contaminants in the expelled steam. For the pressurized gasification process there was a problem making use of the energy in the steam produced in the dryer. The best option would be to be able to use the steam for the gasification process but since this occurs at a higher pressure this could not be achieved in a satisfying way.

If the pressure level of the gasifier is chosen so that it matches that of the gas turbine no further compression of the syngas is needed. Compared to an atmospheric gasification process the syngas don’t have to be further compressed and thus no extra energy is required for this compression work. Also by having pressurized gasification the gas don’t need to be cooled because no compressor is needed. By maintaining a high temperature of the syngas the tars can be kept in their vapour state and no tar clean-up will be necessary. A downside with an elevated pressure is the issue of fuel feeding. Existing technology, such as lock-hoppers, will require the addition of an inert gas for pressurizing the fuel and thereby the heating value of the syngas will decrease.

The atmospheric BIGCC showed lower electrical efficiency than the pressurized concept. However the power output increased due to a higher mass flow through the gas and steam turbine. The power consumption of the syngas compressor along with the lower cold gas efficiency of the gasifier is the main reason to the lower electrical efficiency. Some form of tar removal will also be required since the compression of the syngas requires a low syngas temperature. However the atmospheric dual fluidized bed concept has been successfully demonstrated and the step from atmospheric to pressurized gasification will require a more advanced fuel feeding system.

9 Bibliography

1. Higman C and van der Burgt M, *Gasification*, 2 ed, USA, Elsevier, 2008.
2. Kumar A, Jones D, and Hanna M, *Thermochemical Biomass Gasification: A Review of the Current Status of the Technology,* Energies, 2(3), pp. 556-581, 2009.
3. Marbe Å, *New Opportunities and System Consequences for Biomass Integrated Gasification Technology in CHP*, PhD Thesis, Chalmers University of Technology, 2005.
4. Orbay R C, Genrup M, Eriksson P, and Klingmann J, *Off-Design Performance Investigation of a Low Calorific Value Gas Fired Generic-Type Single-Shaft Gas Turbine,* Journal of engineering for gas turbines and power, 130(3), pp. 031504-7, 2008.
5. Olofsson I, Nordin A, and Söderlind U, *Initial Review and Evaluation of Process Technologies and Systems Suitable for Cost-Efficient Medium-Scale Gasification for Biomass to Liquid Fuels,* University of Umeå, 2005.
6. Koppatz S, Pfeifer C, Rauch R, Hofbauer H, Marquard-Moellenstedt T, and Specht M, *H2 rich product gas by steam gasification of biomass with in situ CO2 absorption in a dual fluidized bed system of 8 MW fuel input,* Fuel Processing Technology, 90(7-8), pp. 914-921, 2009.
7. Ståhl K, Waldheim L, Morris M, Johansson U, and Gårdmark L, *Biomass IGCC at Värnamo, Sweden - Past and future*, in *GCEP Energy Workshop*,Stanford University 2004.
8. Cogeneration & On-Site Power Production, *Fuel-flexible gas turbine cogeneration - advantages and challenges of using waste gases,* 2008 Available from: http://www.cospp.com/display_article/346787/122/CRTIS/none/none/1/Fuel-flexible-gas-turbine-cogeneration-%E2%80%94advantages-and-challenges-of-using-waste-gases/, 2009-10-05.
9. Madl W, Bosch K, and Kotik J, *Next Dual Fluidised Bed Steam Gasifier Starts Up In Austria,* Thermalnet, 2008,Available from: http://www.thermalnet.co.uk/Resources/user/docs/ThermalNet%20Newsletter.pdf, 2009-09-14.
10. KSEBOA, *Centre grants additional Rs 300 Crore for IGCC Vijaywada plant,* 2008 Available from: http://www.kseboa.org/news/centre-grants-additional-rs-300-crore-for-igcc-vijaywada-plant.html, 2009-09-22.
11. Patel J, *Biomass Gasification Gas Engine Demonstration*, in *Small Wood 2004 Creating Solutions for Using Small Trees*,Sacramento, California, USA 2004.
12. Klimantos P, Koukouzas N, Katsiadakis A, and Kakaras E, *Air-blown biomass gasification combined cycles (BGCC): System analysis and economic assessment,* Energy, 34(5), pp. 708-714, 2009.
13. Rodrigues M, Walter A, and Faaij A, *Performance evaluation of atmospheric biomass integrated gasifier combined cycle systems under different strategies for the use of low calorific gases,* Energy Conversion and Management, 48(4), pp. 1289-1301, 2007.
14. U.S. Department of Energy, *Wabash river coal gasification repowering project: Project performance summary clean coal technology demonstration program,* 2002.
15. Sydkraft, *Värnamoverket - Uppförande och driftsättning 1991-1996,* 1997.
16. Stevens D J, *Hot Gas Conditioning: Recent Progress With Larger-Scale Biomass Gasification Systems,* Pacific Northwest National Laboratory, 2001.
17. Personal contact with Björn Fredriksson Möller, EGD Project Manager, E.ON Gasification Dev. AB, 2009.
18. Strömberg B, *Bränslehandboken,* Värmeforsk, 2005.
19. Svebio, *Potentialen för bioenergi,* 2008.
20. McKendry P, *Energy production from biomass (part 3): gasification technologies,* Bioresource technology, 83(1), pp. 55-63, 2002.
21. Ekblad C, *Drying of wet fuels for energy purposes*, Diploma thesis, KTH, 2002.
22. Jirjis R, *Storage and drying of wood fuel,* Biomass and Bioenergy, 9(1-5), pp. 181-190, 1995.

23. Brammer J G and Bridgwater A V, *Drying technologies for an integrated gasification bio-energy plant,* Renewable and Sustainable Energy Reviews, 3(4), pp. 243-289, 1999.
24. Björk H and Rasmuson A, *A method for life cycle assessment environmental optimisation of a dynamic process exemplified by an analysis of an energy system with a superheated steam dryer integrated in a local district heat and power plant,* Chemical Engineering Journal, 87(3), pp. 381-394, 2002.
25. Svenskt Gastekniskt Centrum, *Naturgas i Sverige,* 2009 Available from: http://www.sgc.se/index.asp?Menu=Energigas&ID=424, 2009-11-18.
26. Svenskt Gastekniskt Centrum, *SNG,* 2009 Available from: http://www.sgc.se/index.asp?Menu=Energigas&ID=483, 2009-11-28.
27. Mozaffarian M and Zwart R W R, *Feasibility of biomass / waste-related SNG production technologies,* ECN - Biomass systems, 2003.
28. Karlsson S and Malm D, *Förnybar Naturgas - Förgasning av biobränslen för framställning av metan eller vätgas,* Svenskt Gastekniskt Center, 2005.
29. Göteborg Energi, *GoBiGas,* 2009 Available from: http://www.goteborgenergi.se/Om_oss_Var_verksamhet_Ny_energi_Biogas_GoBiGas_DXNI-1957830_.aspx, 2009-11-20.
30. Energimyndigheten, *Energy in Sweden - Facts and figures,* 2008.
31. van den Broek R, Faaij A, and van Wijk A, *Biomass combustion for power generation,* Biomass and Bioenergy, 11(4), pp. 271-281, 1996.
32. Schuster G, Löffler G, Weigl K, and Hofbauer H, *Biomass steam gasification - an extensive parametric modeling study,* Bioresource technology, 77(1), pp. 71-79, 2001.
33. Melgar A, Pérez J F, Laget H, and Horillo A, *Thermochemical equilibrium modelling of a gasifying process,* Energy Conversion and Management, 48(1), pp. 59-67, 2007.
34. de Nevers N, *Physical and Chemical Equilibrium for Chemical Engineers*, Salt Lake City, Wiley Interscience, 2002.
35. Li X T, Grace J R, Lim C J, Watkinson A P, Chen H P, and Kim J R, *Biomass gasification in a circulating fluidized bed,* Biomass and Bioenergy, 26(2), pp. 171-193, 2004.
36. Fredriksson Möller B, *Optimisation and Integration of Post-Combustion CO_2 Capture in Gas Turbine-Based Power Plants*, Licentiate Thesis, Lund Institute of Technology, 2003.
37. van Loo S and Koppejan J, *The handbook of biomass combustion & co-firing*, Chippenham, Earthscan, 2008.
38. SimTech, *IPSEpro User Documentation*, 1996.
39. Siemens, *Siemens Power Generation - Technical Data,* 2007 Available from: http://www.energy.siemens.com/hq/en/power-generation/gas-turbines/sgt-400.htm, 2009-10-20.
40. Personal contact with Magnus Genrup, Senior Lecturer, Division of Thermal Power Engineering at the Department of Energy Sciences, Faculty of Engineering, Lund University, 2009.
41. Saravanamuttoo H I H, Rogers G F C, Cohen H, and Straznicky P V, *Gas Turbine Theory*, Sixth ed, Harlow, Pearson Education, 2009.
42. Kehlhofer R H, Warner J, Nielsen H, and Bachmann R, *Combined-Cycle Gas & Steam Turbine Power Plants*, 2 ed, Tulsa, Pennwell Publishing, 1999.

Appendix A: Equilibrium constants

	Reaction				
	Bourdoard	Water-gas	Methanation	CO-shift	Steam methane reforming
T [K]	log Kp [-]				
298,15	-21,037	-16,017	8,895	5,020	-24,911
300	-20,849	-15,875	8,814	4,974	-24,689
400	-13,320	-10,129	5,492	3,191	-15,621
500	-8,787	-6,648	3,421	2,139	-10,069
600	-5,764	-4,311	1,993	1,453	-6,304
700	-3,609	-2,619	0,943	0,990	-3,562
800	-1,998	-1,371	0,138	0,626	-1,509
900	-0,750	-0,387	-0,500	0,363	0,113
1000	0,244	0,401	-1,018	0,158	1,420
1100	1,052	1,047	-1,447	-0,005	2,494
1200	1,721	1,584	-1,851	-0,137	3,435
1300	2,284	2,039	-2,115	-0,245	4,153

Appendix B: Flow charts for the different BIGCC-configurations

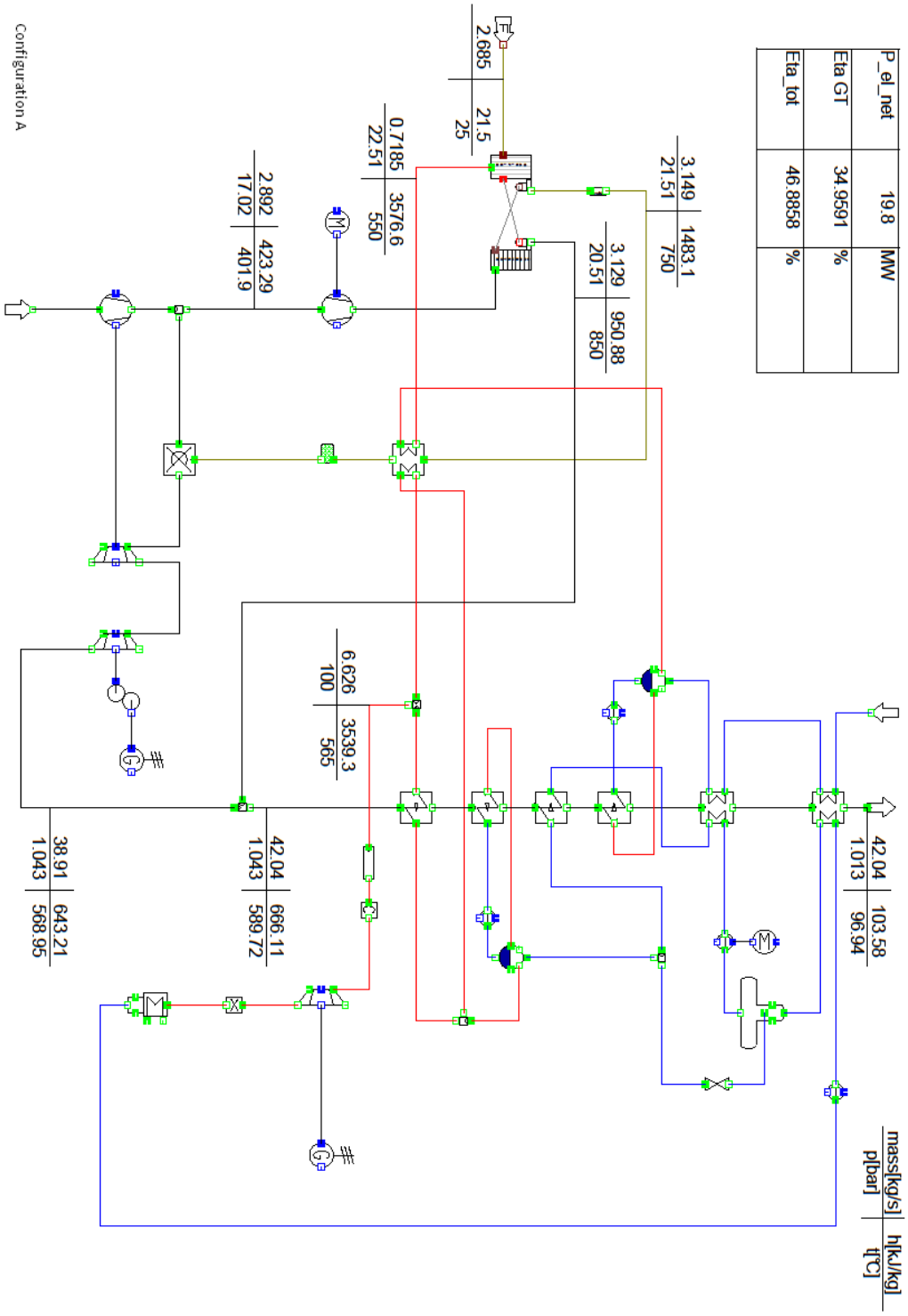

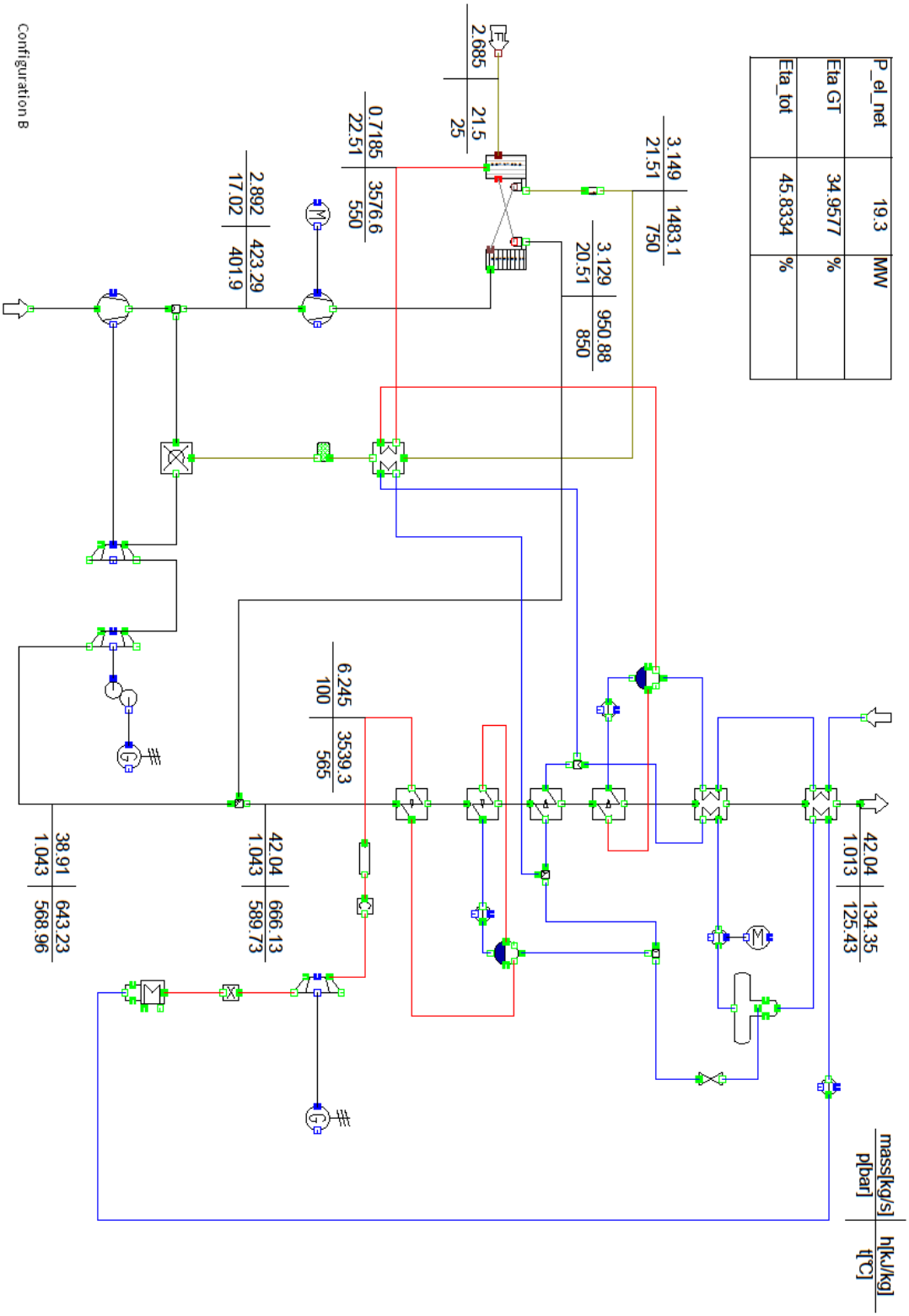
P_el_net
19.3
MW
Eta GT
34.9577
%
Eta_tot
45.8334
%
3.149
21.51
1483.1
750
3.129
20.51
950.88
850
2.685
21.5
25
0.7185
22.51
3576.6
550
2.892
17.02
423.29
401.9
6.245
100
3539.3
565
42.04
1.013
134.35
125.43
38.91
1.043
643.23
568.96
42.04
1.043
666.13
589.73
mass[kg/s]
p[bar]
h[kJ/kg]
t[°C]
Configuration B

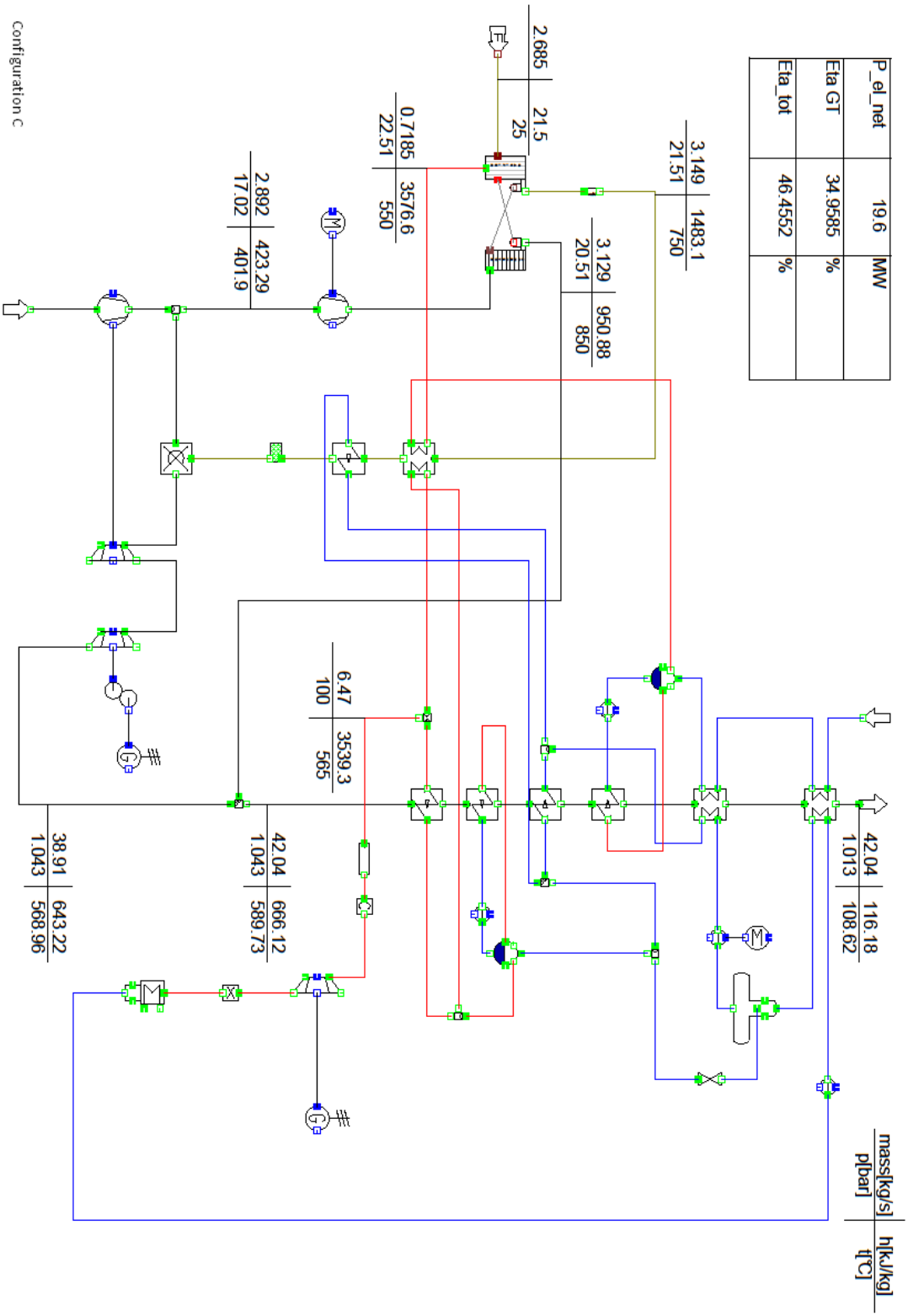
P_el_net 19.6 MW
Eta GT 34.9585 %
Eta_tot 46.4552 %
3.149 1483.1
21.51 750
2.685 21.5
25
3.129 950.88
20.51 850
0.7185 3576.6
22.51 550
2.892 423.29
17.02 401.9
6.47 3539.3
100 565
42.04 116.18
1.013 108.62
38.91 643.22
1.043 568.96
42.04 666.12
1.043 589.73
mass[kg/s] h[kJ/kg]
p[bar] t[°C]
Configuration C

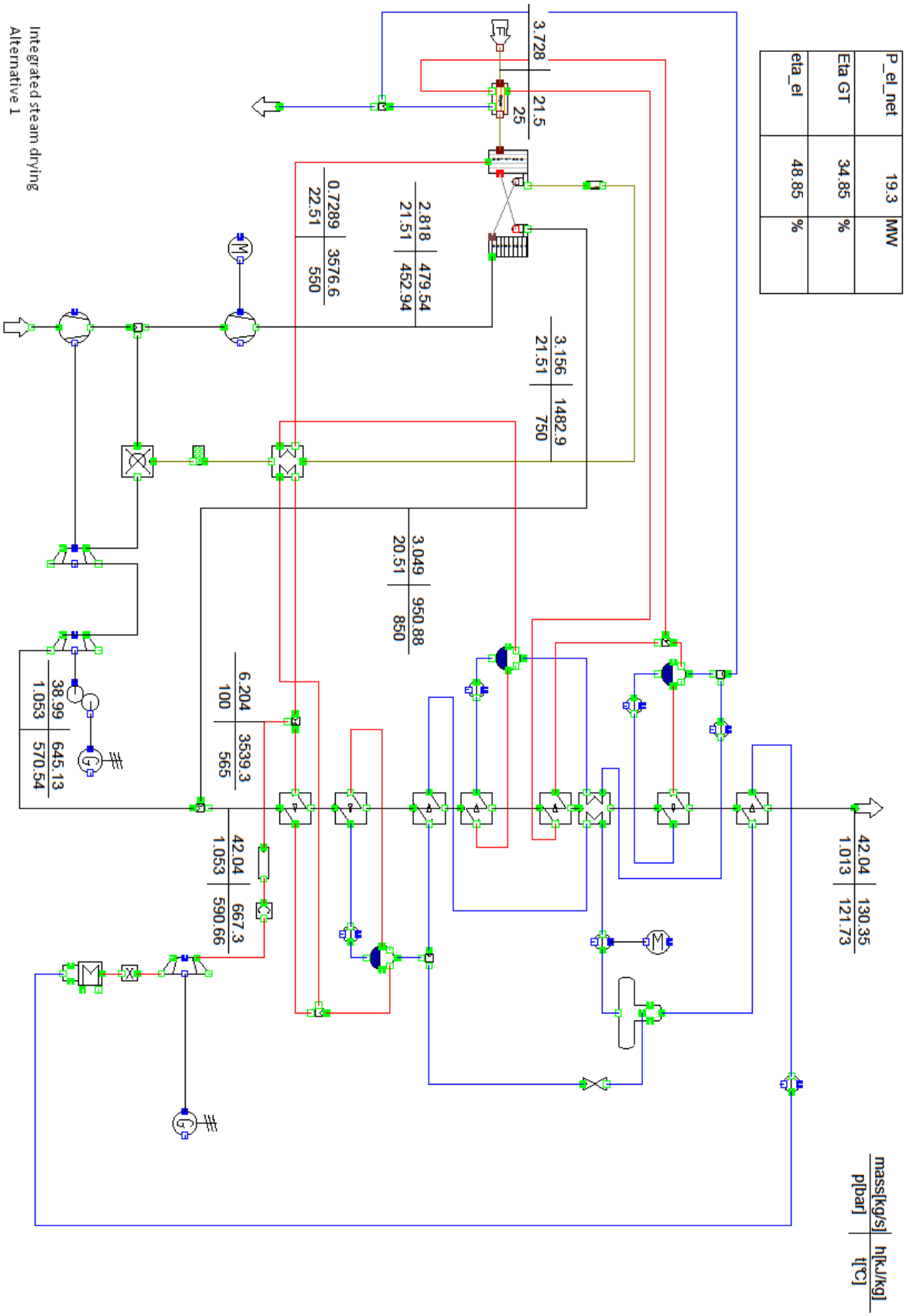
P_el_net 19.3 MW
Eta GT 34.85 %
eta_el 48.85 %
3.728 21.5
25
2.818 479.54
21.51 452.94
0.7289 3576.6
22.51 550
3.156 1482.9
21.51 750
3.049 950.88
20.51 850
6.204 3539.3
100 565
38.99 645.13
1.053 570.54
42.04 667.3
1.053 590.66
42.04 130.35
1.013 121.73
Integrated steam drying
Alternative 1
mass[kg/s] h[kJ/kg]
p[bar] t[°C]

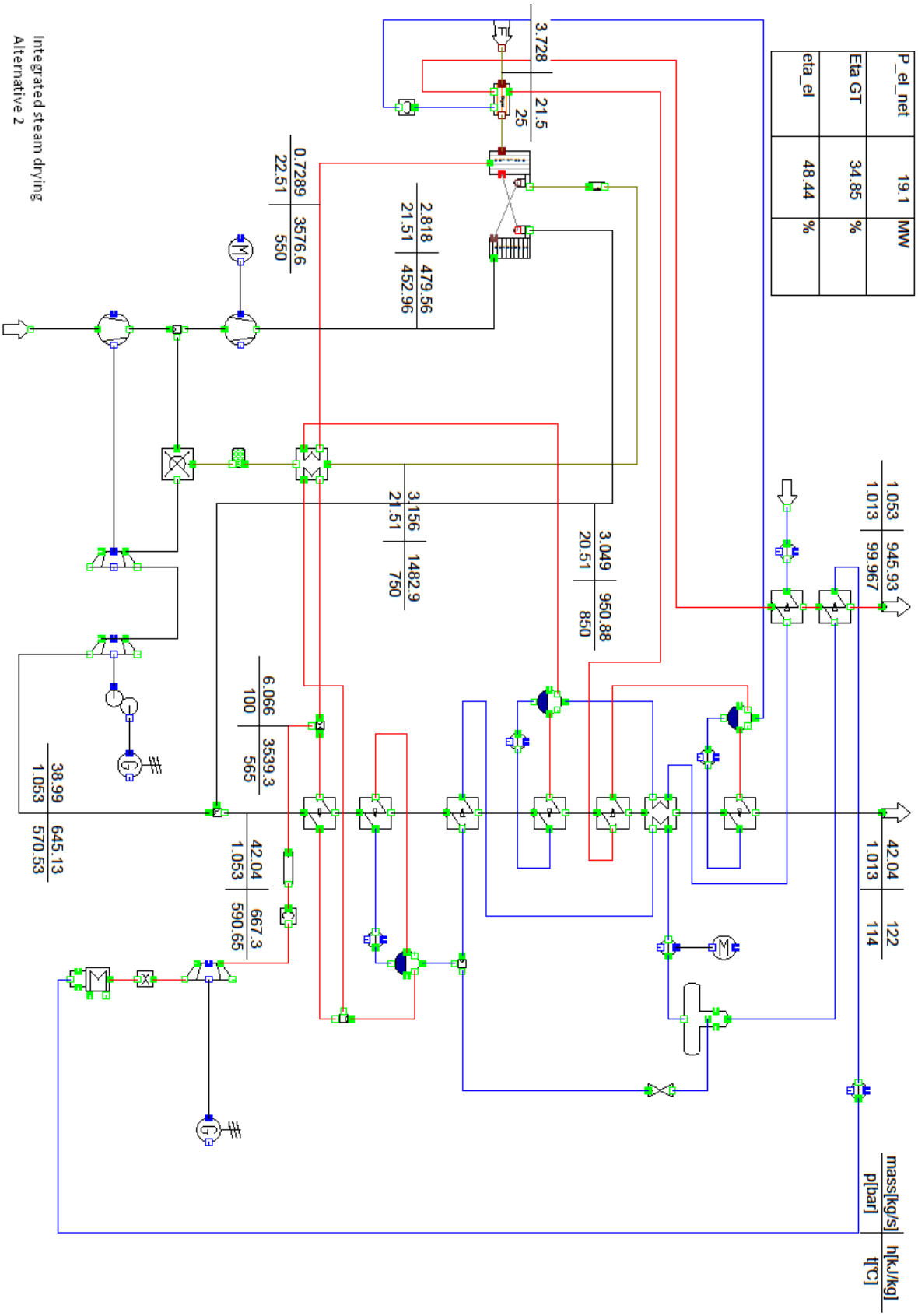
P_el_net
19.1
MW
Eta GT
34.85
%
eta_el
48.44
%
Integrated steam drying
Alternative 2
3.728
21.5
25
0.7289
22.51
3576.6
550
2.818
21.51
479.56
452.96
3.156
21.51
1482.9
750
3.049
20.51
950.88
850
6.066
100
3539.3
565
38.99
1.053
645.13
570.53
42.04
1.053
667.3
590.65
1.053
1.013
945.93
99.967
42.04
1.013
122
114
mass[kg/s]
p[bar]
h[kJ/kg]
t[°C]

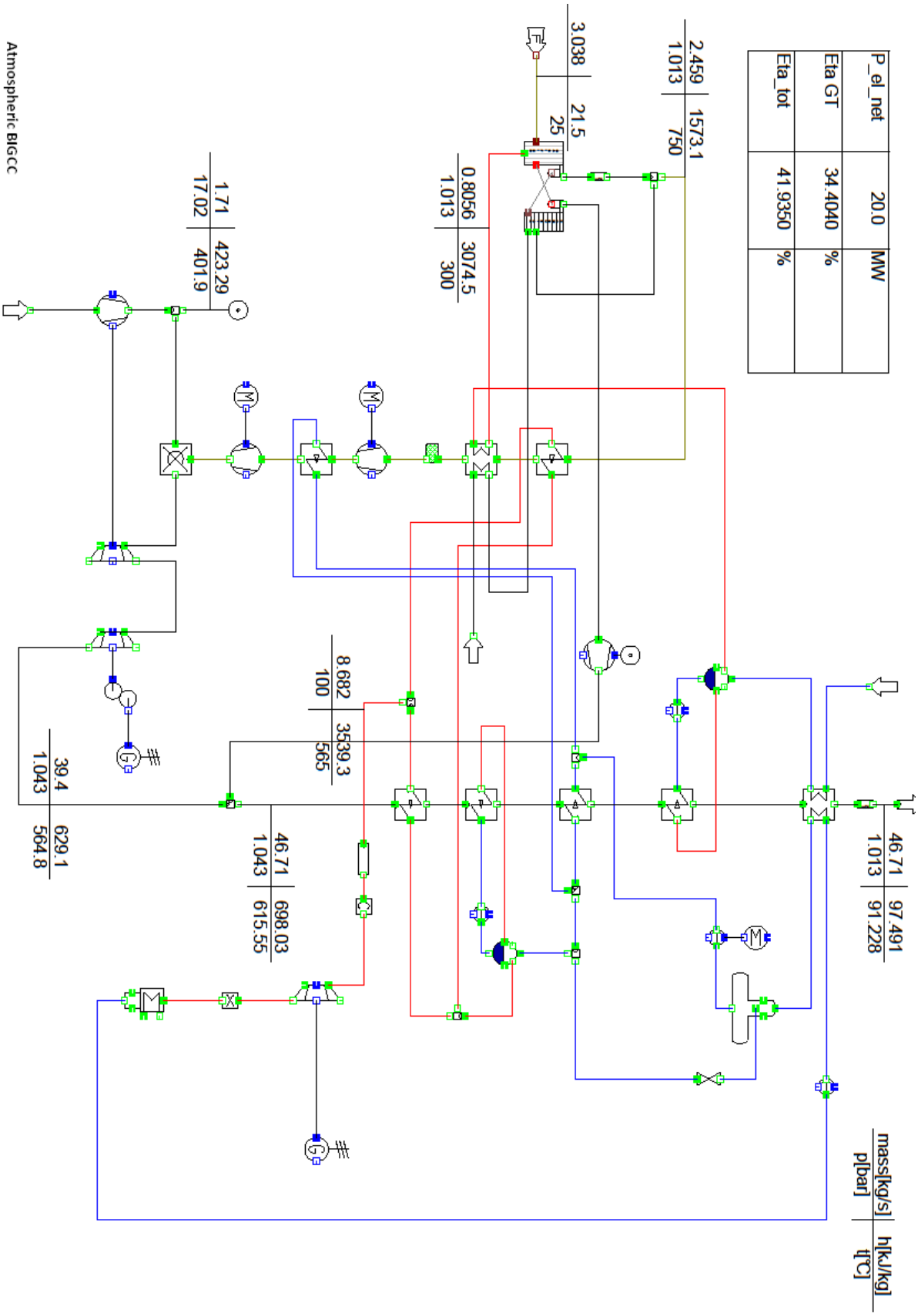
P_el_net 20.0 MW
Eta GT 34.4040 %
Eta_tot 41.9350 %
2.459 1.013
1573.1 750
3.038 25
21.5
0.8056 1.013
3074.5 300
1.71 17.02
423.29 401.9
8.682 100
3539.3 565
39.4 1.043
629.1 564.8
46.71 1.043
698.03 615.55
46.71 1.013
97.491 91.228
mass[kg/s] p[bar]
h[kJ/kg] t[°C]
Atmospheric BIGCC