Treating wastewater in your computer

Summer is just around the corner and soon the beaches will be swarming with people just waiting to dive into the warm clean ocean. But hang on… clean? Is it really? Are our oceans full of aquatic life thriving in the unpolluted water? Actually, as you probably already know, this is a huge problem!

But you can be calm, this article is not here to convince anyone that this is a problem, it is actually here to inform you of the solution! Or at least, a large step into the right direction.

There are several wastewater treatment plants all over the world trying to clean the industries and our wastewater. The engineers and operators working at the plant are constantly monitoring and improving the plants. The better the plant works, the cleaner the water gets and the better it is for our summer swims.

But what if something happens? What if a neighboring plant shuts down and all water has to be redirected to another plant? Or perhaps there is a sudden heavy rainfall, or more long term changes such as an increased load because the city is growing? The operators and engineers have to be able to predict the effects it will have on their plant in order to assure the quality of the water leaving the plant. Imagine if they could get that knowledge by first treating the wastewater in their computers!

Fancy a well-developed model in your computer that actually mimics the plant the engineer has just outside his or her window. This would save a lot of time and money since the alternative is to do "pilot-studies" where you physically mimic the plant.

But the difficulty is to get your hands on a fine working model or to create one yourself. Let's have a look at the procedure of creating one yourself.

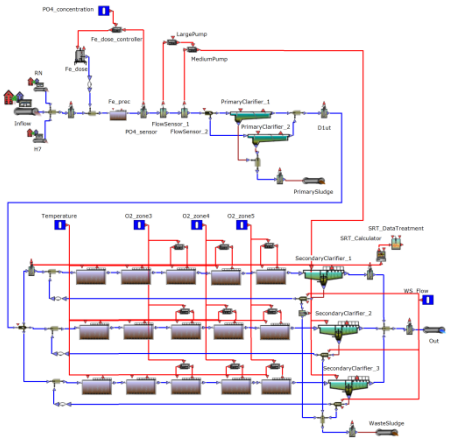

The figure to the right shows the model created for parts of a plant located in Malmö (Sweden). The computer program used in this case (WEST®) allows you to graphically construct your plant. WEST then needs information such as volumes and temperatures as well as flows and concentrations of the incoming wastewater. So you can imagine the extensive amount of information needed! Once the plant is constructed with all the details available, the simulations can start. The aim is to make WEST produce flows and concentrations in different sections of the plant that mimics the same values at the real plant.

There are always difficulties to overcome and the procedure of creating a well-functioning model takes months if not years. It will be time consuming and therefore also expensive. But once the model is done, just imagine all the possible simulations you can run! Within hours you may receive the results that otherwise would have taken you years!

This tool would enhance any wastewater treatment plant by making it less costly and eventually resulting in improved operation and understanding of the plant. A plant that is easy to analyze will also be a plant that is easier to control. And a well-controlled plant will discharge high quality water next to our summer beaches!