ISSN 0280–5316
ISRN LUTFD2/TFRT--5479--SE

Test Unit for a Final Folder

Per Lantorp

Department of Automatic Control
Lund Institute of Technology
August 1993

Department of Automatic Control
Lund Institute of Technology
P.O. Box 118
S-221 00 Lund Sweden

Document name
MASTER THESIS

Date of issue
August 1993

Document Number
ISRN LUTFD2/TFRT--5479--SE

Author(s)
Per Lantorp

Supervisor Henrik Olsson.
Dennis Lundmark, Esko Heinonen.(Tetra Pak)

Sponsoring organisation

Title and subtitle
Test Unit for a Final Folder.

Abstract

The purpose of this report was to create a proposal for a test unit to a final fonder on a TBA/9-machine. It would include a complete final folder, a driving system and control system so the speed of the final folder can vary from 0 ind/h to 9000 ind/h, a registration unit, which takes care of measured parameters, a conveyer to transport packages around the final folder, a feeding unit and a magazine for semi-finished products.

A goal was to use as many standard Tetra Pak components as possible. Using a TPMC 64.1 as computer for the control system, all programs are written for it. The magazine and feeding unit are designed to be as simple and flexible as possible. Function tests were made when it was possible. The measured parameters were chosen after their importance and their possible ability to vary during tests.

The result includes: an electrical motor with control equipment, a control system with programs, instruments for measuring various parameters and a registration unit, a conveyer, a feeding unit and a magazine.

The test unit is designed for 250 ml packages. With minor changes it can be used with other sizes in the Tetra Brik family, for example 200 ml Slim. The unit can be used to test new materials on already existing parts as well as new parts or functions. It is flexible and can be expanded or diminished depending on future demands.

Key words

Classification system and/or index terms (if any)

Supplementary bibliographical information

ISSN and key title
0280–5316

ISBN

Language
English

Number of pages
99

Security classification

Recipient's notes

Test unit for a final folder

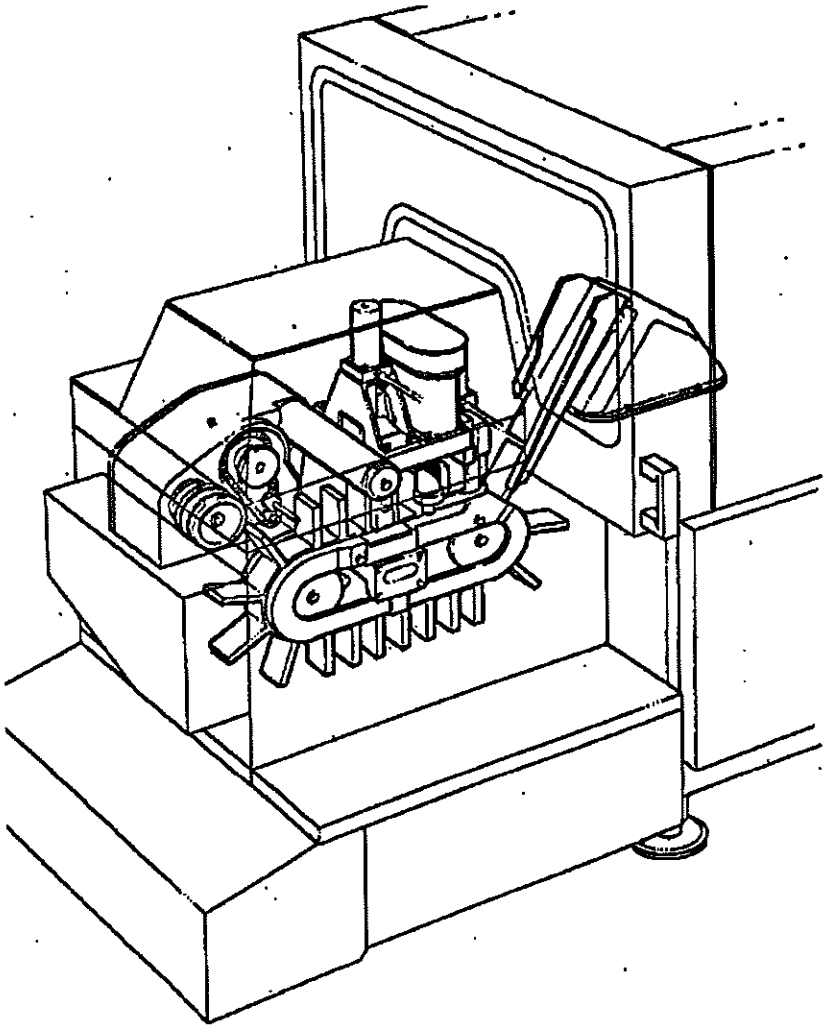

930816
Per Lantorp
Electrical engineering
Lund Institute of
Technology

FOREWORD

This master thesis is made at Tetra Pak, Lund in collaboration with Lund Institute of Technology. This is the last compulsory project before receiving a Master of Science Degree in Electrical Engineering.

My advisers at Tetra Pak have been Dennis Lundmark and Esko Heinonen. Henrik Olsson at the Department of Automatic Control has been my adviser at Lund Institute of Technology. I have also been supported by Robert Bjärnemo at the Department of Machine Design.

I have worked together with Hans Holmén in matters concerning construction of the conveyer, the feeding device and the magazine. Hans Holmén is a consultant employed by Ferator and working at Tetra Pak since several years. I also would like to thank Branimir Stefan and Bo Norrgren at Tetra Pak for all help and support.

If there are any questions concerning the report, please contact the author. Questions dealing with the programmes can also be answered by Branimir Stefan, and questions about the registration unit can be answered by Bo Norrgren.

CONTENTS

1. INTRODUCTION

A TBA/9-machine (Tetra Brik Aseptic) is a complete packaging system for liquid food products. It produces packages in different sizes and shapes containing e.g. milk or juice. The TBA/9 is an automatic machine. It is fed with paper at one end, and at the other end the packages come out. The final folder is the last station of a TBA/9-machine. It takes care of folding the flaps of the package and delivering it to a conveyer.

The purpose of this master thesis is to create a proposal for a test unit to a final folder on a TBA/9-machine. The construction of the test system should be based on this proposal. The test system includes: an electrical motor with control equipment to drive the final folder at different speeds, devices for measuring temperatures, pressures etc, a conveyer for transportation of packages with a unit for feeding packages to the final folder and a magazine, which can be filled with about 10 semi-finished products. It also consists of a control system and programmes to control the unit.

At the moment, the TBA/9-machine can run with two different speeds, low and high. Low is used when you start up production and for example when cleaning. High is used in normal production. When high is chosen, the final folder makes 6000 indexations/hour (ind/h). With this test system, we want to test the final folder at different speeds, from 0 ind/h to 9000 ind/h. The goal is to find out how fast it can run, and what kind of problems that occur at high speeds. A new discharge unit is also under construction. This unit needs to be tested and compared to the old one.

2. THE FINAL FOLDER

The final folder, Fig. 1, is located at the end of a TBA/9-machine. It folds the top and bottom flaps of the package and delivers it to the conveyer. It is connected to the main machine. The jaw system of the main machine drops the unfolded packages on a chute down to the final folder. The final folder itself consists of five major parts: the station chain, the pull-down device, the air heater, the pressure device and the discharge unit. It is driven by an axle connected to an indexing unit. At one end of the axle, an electrical motor is connected. In the indexing unit a constant rotation movement is transformed to an intermittent movement, which drives the station chain.

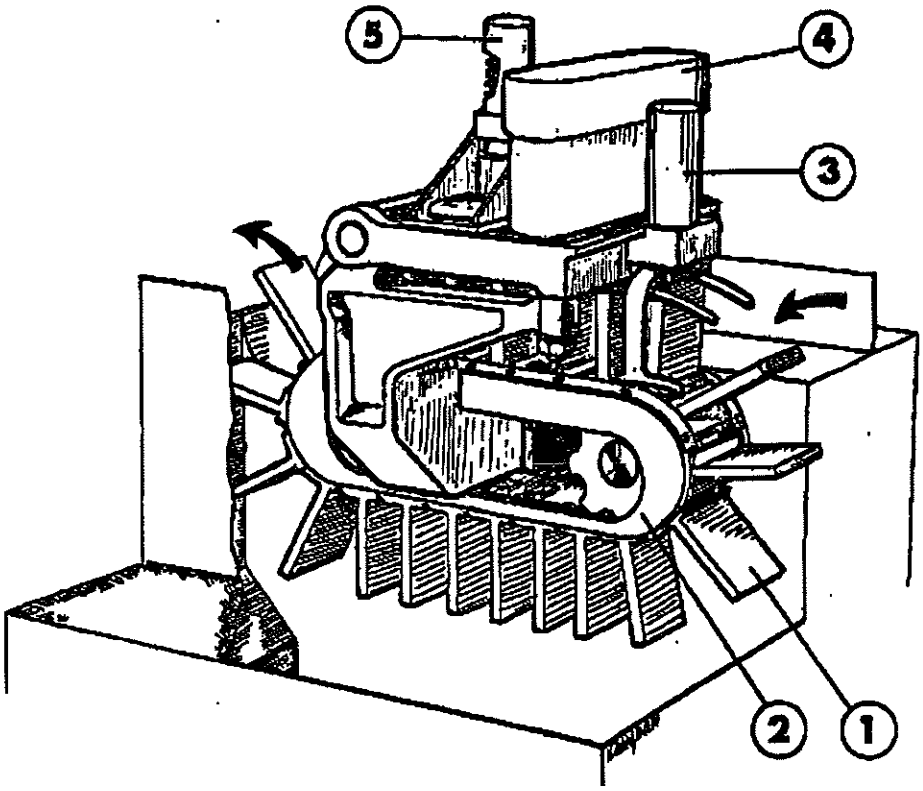

Fig. 1 Final folder

1. Station chain
2. Guiding bar
3. Pull-down device
4. Air heater
5. Pressure device

2.1 Station chain

The station chain, Fig. 2, transports the packages through the final folder. It consists of stations connected with axles. The station chain moves in distinct steps and takes the package to three stations where the folding is done.

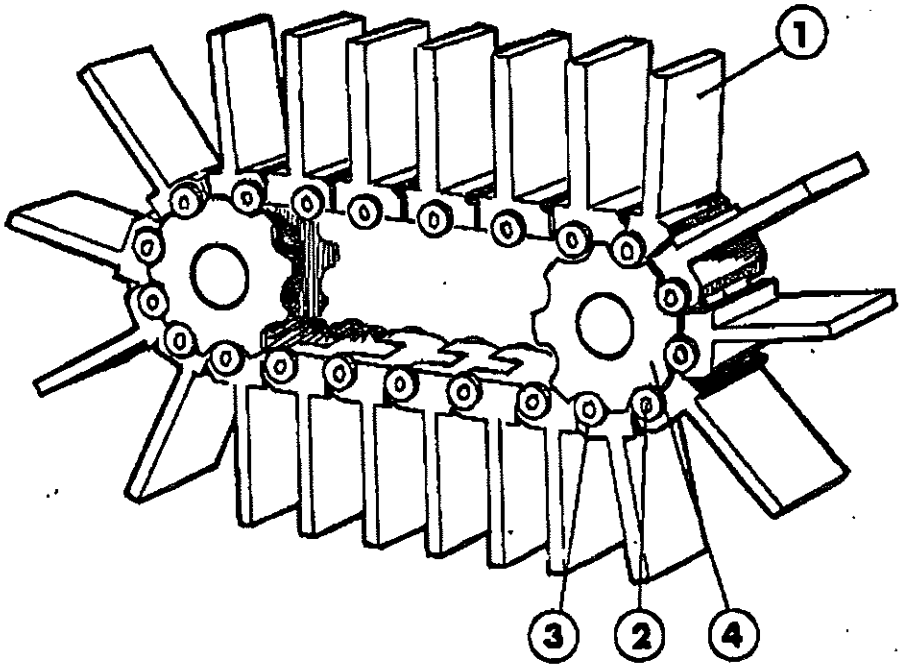

Fig. 2 Station chain

1. Station
2. Axle
3. Slider
4. Chain wheel

2.2 Pull-down device

The first station for the packages is the pull-down device, Fig. 3. When a package comes down on the chute, it is directed into the station chain. The package then hangs on the bars (1) and is transported to the pull-down device. There the package is pushed down to the bottom of the station. The flaps are prefolded at the top and at the bottom, Fig. 4.

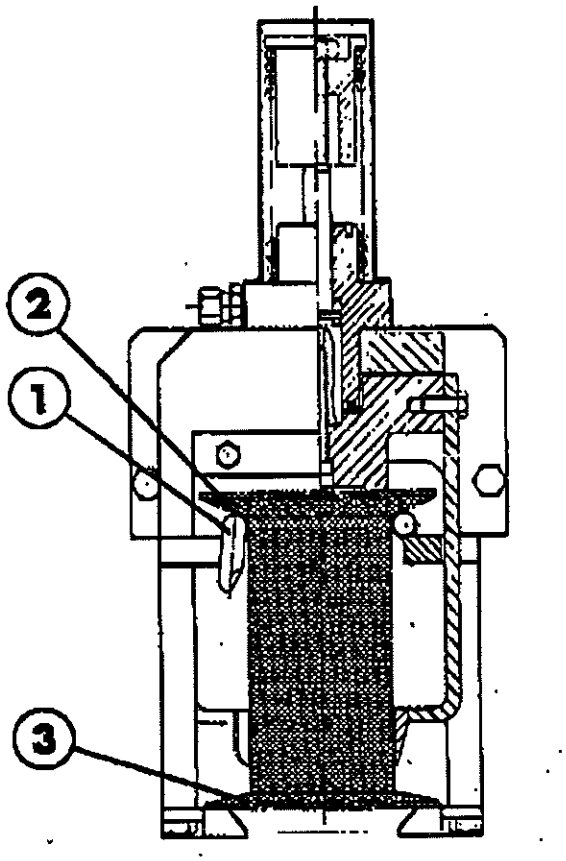

Fig. 3 Pull-down device

1. Bar
2. Bottom flap
3. Top flap

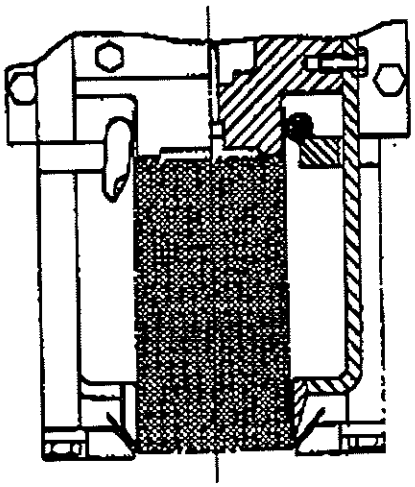

Fig. 4 Pull-down device

When the package has passed the pull-down device, the flaps are folded a bit more by four bars (1), Fig. 5.

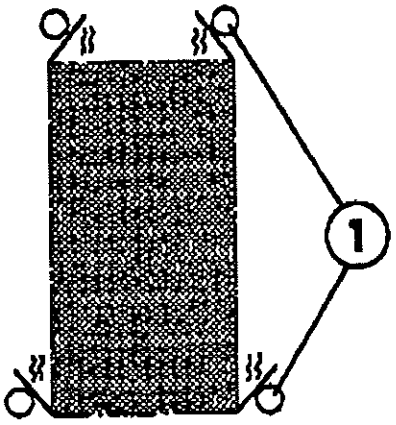

Fig. 5 Stearing bars

1. Bars

2.3 Air heater

In the air heater, Fig. 6, cold air comes from the inlet (1) and is led to three electrical heating elements (2). There the air is heated. The warm air is transported to four air nozzles (3). They direct the air against the flaps on the package. The package is covered with plastic, and the air melts the plastic surface. Later the flaps are sealed against the sides of the package, using the melted plastic as glue.

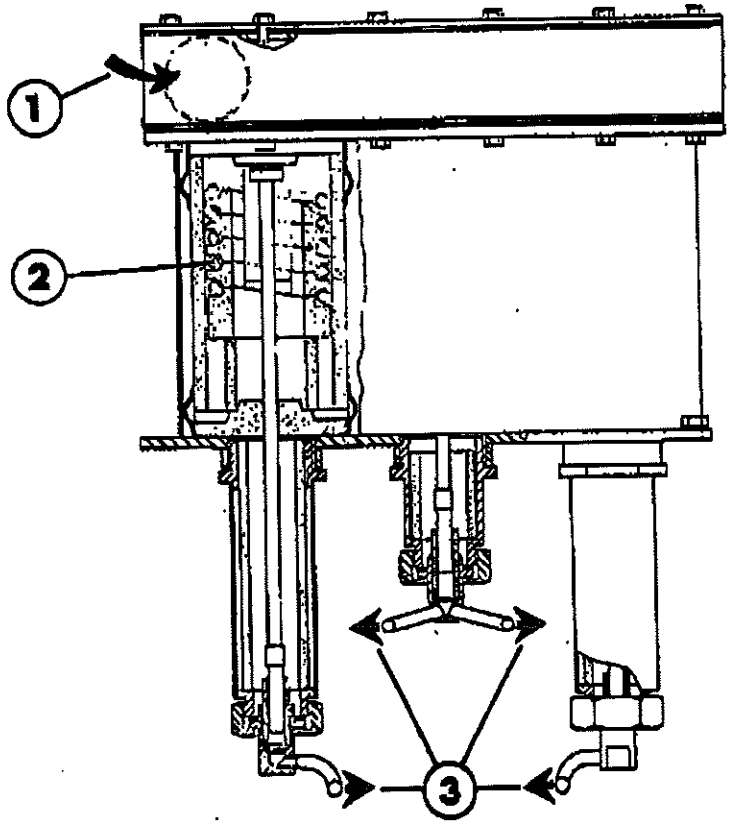

Fig. 6 Air heater

1. Air inlet
2. Heating element
3. Air nozzles

2.4 Pressure device

The pressure device, Fig. 7, seals the flaps on the package by pressing them onto the sides of the package.

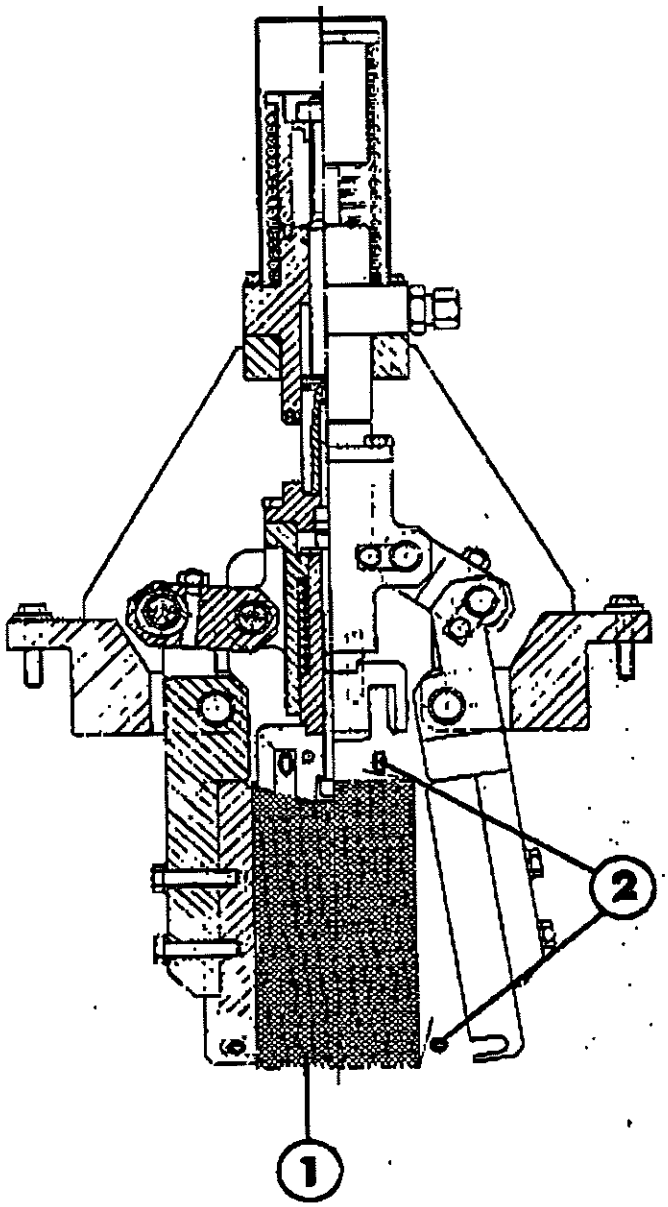

Fig. 7 Pressure device

1. Package
2. Folding bar

2.5 Discharge unit

The discharge unit moves the package from the station chain out to the conveyer. There are two different types of discharge units. The new one will be tested with this test system, and then compared to the older one.

The old unit, Fig.8, consists of a pin on a chain that pushes the package from underneath, over a rotating wheel and out of the final folder.

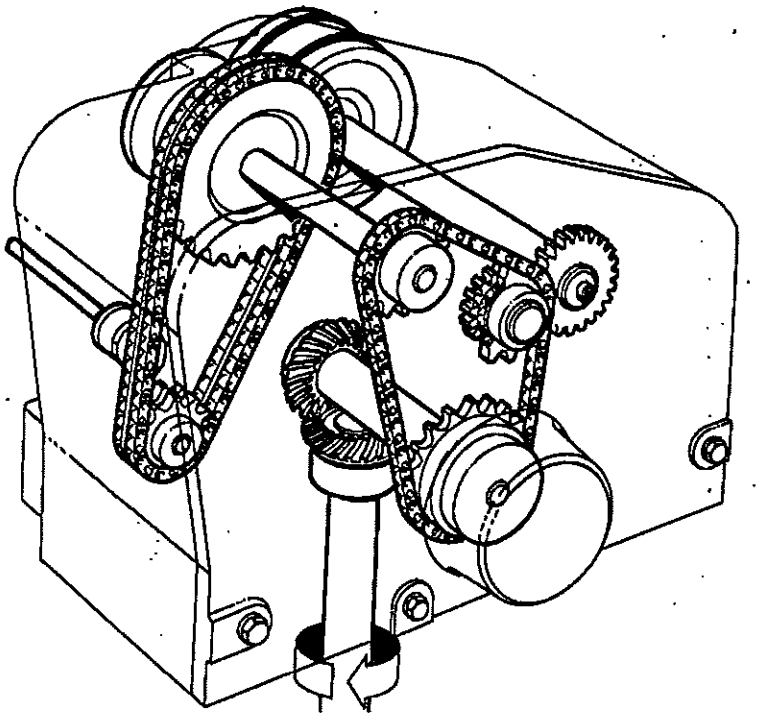

Fig. 8 old discharge unit

The new discharge unit is under development. The final version is not yet ready. When it is completed, it will be tested on this test unit. However, the main ideas are ready. It will have two chains with pins pushing the packages. The pins are similar to the one on the old unit. A plate on an axle will distribute the packages to the two chains. The goal is to have the chains run smoother, and to increase the capacity of the discharge unit.

3. MEASUREMENTS AND REGISTRATION

The final folder will be tested at different speeds and conditions. Therefore various selected parameters must be measured properly. When the parameters were chosen, different conditions had to be taken under consideration. Since the test unit will run at different speeds, preferably faster than today, and for long periods of time, parts getting large loads were looked on particularly. The synchronization of all functions is crucial. Therefore measuring parameters informing of the states of the functions were important. Last, but not least, finding a registration unit being able to collect different types of signals as well as being able to present the values clearly and correctly was essential.

3.1 Measure points

All functions must be synchronized when the final folder runs at different speeds. Everything from the downfall of the package to the discharge unit has to be synchronized. There may, for example be time delays in different functions. These can be stable, or vary in time. It is important to find these to be able to synchronize the test unit properly.

To detect when a package is falling down on the chute, a proximity switch is placed on the chute. It signals when a package slides down. The switch is connected to a registration unit, where it is registered.

Just before the station chain comes into position to accept a new package, another proximity switch gives a signal. This signal is also registered in the registration unit. By comparing these signals, it is possible to see if the packages are coming down synchronously with the station chain movement. If not, the feeding function has to be adjusted accordingly, as described in 5.2.6.

The pull-down device and the pressure device are only allowed to be activated when the station chain is standing still, and only when there is a package in the station. To detect when the pull-down device and the pressure device are activated, there are two proximity switches giving signals when they are at their low position. These signals are also connected to the registration unit.

For the placement of the proximity switches, see drawings in appendix.

A guiding bar makes sure that the chain stays in place. The station chain runs on metal sliders. They slide on the bar. The metal sliders may be changed to plastic sliders. It would be useful to see how warm the sliders get when the chain runs, therefore a temperature indicator is soldered to the guiding bar. From that we can feel how warm the sliders get. It registers the temperature there, and passes it on to the registration unit.

The pull-down device and the pressure device are connected to a hydraulic unit. When the hydraulic unit gets activated, pressure is activated on the hydraulic oil and the pull-down device and the pressure device press together. The pressure in the oil pipes is measured, in order to detect if the forces change with different speeds.

When the station chain runs with different speeds, the tension varies. The tension in the chain increases, especially when it runs fast. It is interesting to see if the chain is expanding. Therefore the expansion is measured with a device connected to the station chain tensioner. It registers the length from the switch to the axle.

3.2 Registration unit

The registration unit takes care of all the measurements. It has not yet been decided what type of unit to use. Different types from different firms are undergoing tests to see which one is best for Tetra Pak. The one most likely to be chosen is however Microlink 3000-series. It is a complete system with software and hardware. The system is very flexible and can handle various types of sensors and switches.

To the registration unit the following sensors and switches should be connected:

1 proximity switch from the chute

1 proximity switch from the station chain

1 proximity switch from the pull-down device

1 proximity switch from the pressure device

2 proximity switches from the new discharge unit

1 Inductive sensor from the chain tensioner

1 pressure sensor from the hydraulic system

1 temperature sensor from the dish water

1 temperature sensor from the guiding bar

4. CONSTRUCTIONS

The main part of the test unit is, of course, the final folder itself. To be able to test the final folder properly, different parts have been added to it. The main added parts are a magazine, a feeding unit, a transportation unit and cover plates.

Trying to use as many standard Tetra Pak parts as possible, the transportation unit is almost entirely based on old and proved parts. The magazine, the feeding unit and the cover plates are all new designs. A goal was to make them as simple and flexible as possible. The constructions also includes other parts like a stand for the final folder, various holders and brackets etc. All the drawings are located in the appendix.

4.1 Magazine

In the magazine, about ten semi-finished products are loaded. These are pushed down the magazine chute to the final folder by a cylinder. The cylinder is synchronized with the station chain. The magazine can be adjusted to different package sizes with the finger nuts on the sides.

4.2 Feeding unit

The feeding unit consists of a cylinder, a stop-board with a cylinder attached to it and a single photo cell. The function is as follows. The stop-board creates a queue with packages by the cylinder. The cylinder then pushes one package at a time down the chute to the final folder. This is synchronized with the movement of the station chain. The photo cell makes sure that if there is no package in front of the cylinder, the cylinder is not activated. If a package that has tilted over appears, the stop-board moves away and the cylinder switches off. When the package that has tilted over has passed, the stop-board moves back again and the system goes back to normal.

4.3 Transportation of packages

When a package comes out of the final folder, it is transported around to the feeding unit by a conveyer. There is a single photo cell at the beginning of the conveyer, which the packages pass through. It is used to detect if a package comes out wrong and gets stuck. If so, the machine stops.

In front of the feeding unit is a hose brake and a double photo cell placed. To get the feeding unit to work properly, it always has to have a queue of packages. If the queue becomes too long though, the feeding unit will have problems. We have made tests showing that a queue with three packages works well. The test was made with 250 ml packages. The photo cell is placed four package-lengths from the stop in the feeding unit. This can change depending on the length you choose as the maximum acceptable queue length. When the photo cell registers a queue of four, the hose brake switches on until the queue diminished.

Problems occur when a package has tilted over on the conveyer, since it will then get stuck in the feeding unit. To indicate a tilted over package we use a double photo cell. The two cells are placed on top of each other. If the bottom one gives a signal and the top one does not, there is a titled over package on the conveyer. Three things will now happen. The cylinder that pushes down the packages stops. The board stopping the packages in the feeding unit moves away, and the hose brake switches on to stop new packages. The tilted over package and the ones in front of it are now transported off the conveyer. When they have passed, the hose brake opens and the system goes back to normal.

4.4 Cover plates

The feeding side of the final folder is normally open. When you run the test unit and use the washing function, it is necessary to cover that side. Otherwise the dish water will pour out. To stop the water, we have designed cover guards. If they are attached they cover the same parts that are usually covered by the main machine.

5.THE CONTROL UNIT

The test unit is controlled by a control system specially designed for Tetra Pak called TPMC 64 (Tetra Pak Machine Controller). It is developed by Satt Control. TPMC is a programmable logical control system, and consists of three main parts, Inputs, Outputs and Central unit. Switches of different kinds e.g. proximity switches and angle devices are connected to the inputs. To the outputs execution units like switches, lamps or valves are connected. The switches inform about how the machine is working. With this information and the main programme the outputs are activated by the control unit. The TPMC-system uses only two signal states, 1 and 0 (on and off). For this test unit it is necessary to use a TPMC 64.1-system, since we need to be able to calculate with thousands of seconds. This model also makes debugging easier.

The programme language is based on Boolean algebra. When different conditions are fulfilled, the computer carry out certain tasks. The language includes functions like time delays, timers, shift registers, counters etc. These together with inputs, outputs and memory bits make up the programme. The programmes are written to fit in a TPMC 64.1 computer. A goal when writing the programmes was, when possible, to have similar solutions to the ones used in a TBA/9-machine. Since the test unit did not exist when the programmes were written, all of them are not thoroughly tested. If it was possible, however tests were made.

5.1 Central unit

The central unit controls and guards all activities in the system. The two main parts are the processor and the memory. The processor controls activating outputs, starting time delays etc with help from information in the memory and from the inputs and the outputs. The memory is supplied with a battery, so information is not lost in case of a power break.

The memory is devided into programme memory and work memory. The programme memory stores instructions controlling the machine. The status of inputs and outputs, counter values etc are stored in the work memory. In both memories it is possible to read as well as write information.

The programme memory can be associated with a ladder. The programme is scanned instruction after instruction. An instruction row is called a rung. When the last rung is read the scanning starts from the beginning again. A total scanning period consists of an I/O-scan and a programme scan. First the I/O-units are scanned and then the programme. It is also possible to have certain programme parts scanned many times during one scanning period, so called fast scan. The time for a scanning period is about 10 ms. The scanning period for a fast scan is about 1 ms. The scanning is repeated continuously about 100 times every second.

5.2 Programme and functions

The programme is devided into different blocks. A certain block controls a specified function. This means that the programme becomes well structured and is easy to read. The programme consists of the following blocks: Alarm systems, Lubrication, Cleaning, On and off functions, Final folder functions, r/min counter function, Brake functions and Product spraying function. Programmes are listed in appendix.

5.2.1 Alarm systems

In this block different alarm functions are registered. Most of them are connected to a specific lamp, which indicates what kind of fault that has occurred. The faults indicated are:

TPMC battery level: low

Hydraulic oil level: low

Hydraulic oil temperature: high

Clean tray: level fault

Lubrication oil level: low

Lubrication fault

Some faults are fatal for the system. When they occur, the final folder stops. To start it again you must take appropriate action to overcome the problem. The faults stopping the final folder are:

Infeed congestion. A package is stuck on the chute leading down to the final folder.

Queue monitor. A package is stuck after leaving the discharge unit to the conveyer.

Rotation fault. Problems with the driving of the station chain. It cannot run at the speed which was chosen.

Max running time with lubrication fault. When the lubrication does not work, the final folder stops after one hour.

Emergency stop. If the emergency stop button is pressed, the final folder stops.

5.2.2 Lubrication

This block takes care of the lubrication in the final folder. It consists of two alternative programmes, normal or long lubrication. In normal lubrication, oil is sprayed for ten seconds once every fifteenth minute. To choose long lubrication you push a button on the board. Oil is then sprayed five times during a fifteen minute period. Long lubrication is always done after cleaning. The block also contains a test if the oil-pressure is sufficient during lubrication. If not, Lubrication fault is indicated on the board.

5.2.3 Cleaning

The cleaning block handles washing and rinsing of the final folder. Cleaning starts when a special button is pushed on the board, and certain conditions are fulfilled. Washing with detergent is alternated with rinsing with water. If there is a problem with emptying the clean tray, it is indicated by a lamp on the board.

5.2.4 On and off functions

In this block you can choose to have different functions activated. By pressing different buttons on the board, you choose to turn on the pull-down device, the pressure device or the air heater. You can also start the conveyer. To restart the final folder after emergency stop have been pressed or a fatal problem like rotation fault has happened you must press emergency stop reset.

5.2.5 Final folder functions

The pressure device and the pull-down device are controlled from this block. Just before a station on the station chain gets in position, a signal from a proximity switch starts a timer. This timer is used to activate the pull-down device and the pressure device after a chosen time. They are only activated if they have been chosen on the board and if there is a package in the right station. The second part is taken care of by a shift register.

Another proximity switch on the chute indicates when a package slides into the station chain. This signal is then shifted in the shift register, which controls if the two devices will be activated or not.

5.2.6 Package feeding function

This block controls the cylinder in the feeding unit and the cylinder in the magazine. To activate one of them, use the switch on the board. Both cylinders are controlled in the same way.

A proximity switch gives a signal just before a station gets in place to receive a package. The signal activates the cylinder that pushes down the packages. A short time later the cylinder valve returns and waits for a new signal.

It is important that the station chain is synchronized with the cylinder, so the packages fall down right. If it takes too long for the package to reach the station after the proximity switch has been activated, it may be necessary to modify this block. It is then possible to use the signal coming from the station before and control the cylinder with that signal, delayed for a suitable time. The time is difficult to know before the test unit has been built, and before testing if the problem occurs. Therefore this block may have to be modified later.

5.2.7 r/min counter function

The time it takes for one indexation is measured. From this the speed of the final folder is calculated. Fast scanning is made every millisecond. The programme counts how many fast scannings there are between two signals from the proximity switch by the station chain. This is transformed to the unit ind/h. The number is stored in a register. There is also a part that takes care of sending the number to the display on the cabinet.

5.2.8 Brake function

This block activates the hose brake and the gate on the conveyer. To make the feeding unit work right, there must be a queue of packages. The queue cannot be too long though. Tests have shown that a three-package-queue works well. If the queue becomes too long, the hose brake stops incomming packages until the queue has diminished.

If a package tilts over on the conveyer, it will get stuck in the feeding unit. To stop this we have a movable gate and a double photo cell. When a package that has tilted over passes the photo cell the hose brake is activated. At the same time the feeding cylinder turns off and the gate opens. When that package has passed the gate, the system goes back to normal again.

5.2.9 Product spraying function

When this button is pressed on the board, a product (e.g. juice) is sprayed on chosen places every hour.

5.2.10 Fast scanning

In this block you place rungs that need to be scanned fast. They will then be scanned every millisecond. The rungs which counts r/min on the axle are placed here.

5.3 Driving unit

The final folder is driven by an electrical motor. It is connected to the main axle of the final folder. The number of revolutions must be able to vary from 0 r/min to 3000 r/min. This correspond to 0-9000 ind/h. This is done by a frequency converter. The frequency converter is placed in the control cabinet and connected to the motor.

6. THE CONTROL CABINET

The test unit is controlled from a cabinet. It contains the TPMC, the frequency converter for the motor and various connections and cables. On the doors to the cabinet, the display panel with all the lamps, buttons and the display unit for the speed of the final folder is placed. A thought was to have a compact and flexible unit controlling the final folder. The unit should be easy to expand or diminish depending on future demands and also easy to move.

6.1 Display panel

The control board, Fig. 8, is placed on the doors of the cabinet. There are three types of devices on it, buttons, lamps and a display unit. With the buttons you can choose different functions on the final folder, and the lamps indicate various states. The display unit shows how many indexations per hour the final folder makes at the moment.

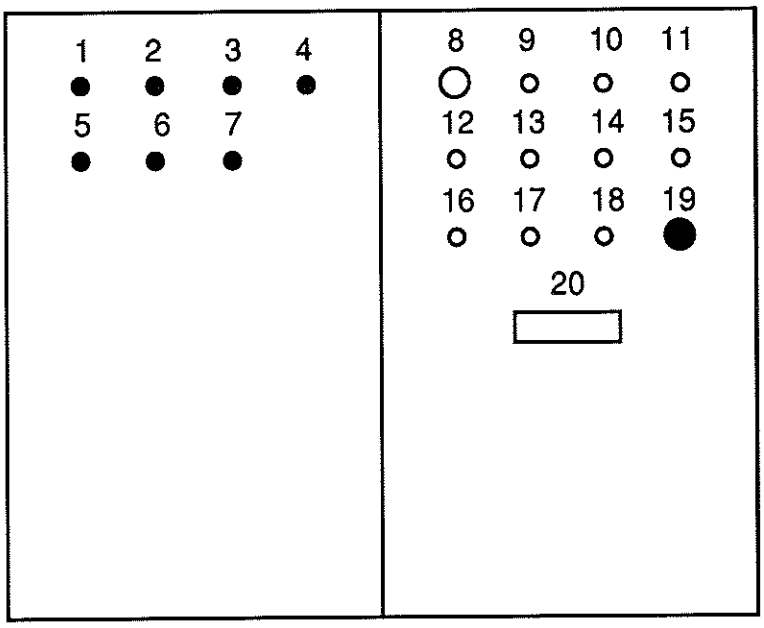

Fig. 8 Control board

1-7: Alarm signals
8: Emergency stop
9-19: Function buttons
20: Speed display

The following tables show the functions of each unit.

Alarm indications

1. TPMC battery level: low
2. Hydraulic oil level: low
3. Hydraulic oil temp: high
4. Clean tray: low level
5. Lubrication oil level: low
6. Lubrication fault
7. Emergency stop

Buttons

8. Emergency stop
9. Emergency stop reset
10. Cleaning
11. Activate queue monitor
12. Activate rotation fault
13. Air heater
14. Conveyer
15. Pull-down device
16. Pressure device
17. Long lubrication
18. Product spraying
19. Cylinder magazine/feed-unit

Emergency stop: To stop the test unit, press the emergency stop.

Emergency stop reset: Press this button to restart the test unit. It must be done after you have pressed emergency stop or a fatal error has occurred, see 5.2.1. Otherwise the test unit will not start.

Cleaning: Activates the cleaning programme.

Activate queue monitor: Press this button to activate the queue monitor function, see 5.2.1.

Activate rotation fault: Press this button to activate the rotation fault function, see 5.2.1.

Air heater: To start the air heater, press this button.

Conveyer: To start the conveyer, press this button.

Pull-down device: To activate the pull-down device, press this button.

Pressure device: To activate the pressure device, press this button.

Long lubrication: Activates the long lubrication programme.

Product spraying: Activates the product spraying programme. It sprays for instance juice on selected places.

Cylinder magazine/feed-unit: With this switch you choose either to activate the infeed cylinder or the magazine cylinder. There is also a third state that does not activate any of the two.

Number 20 on the board is the display unit that shows the speed of the machine in ind/h.

6.2 Cabinet

Inside the cabinet are the TPMC-unit and the frequency converter, Fig 9. The cabinet also contains the connections between the TPMC and the devices on the test unit.

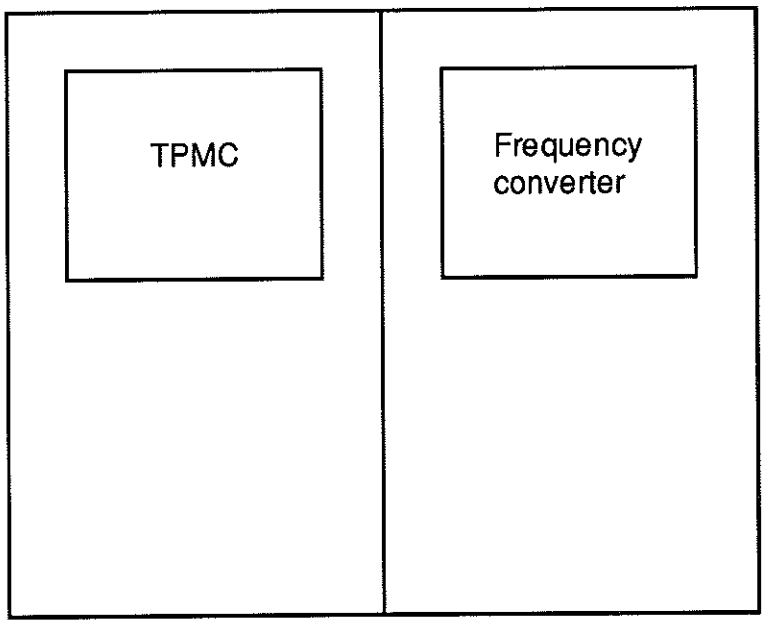

Fig. 9 Control cabinet

7. POSSIBILITIES FOR FUTURE DEVELOPMENT

The main purpose for the test unit is to test the final folder under different conditions. The functions themselves, like the pull-down device, pressure device and air heater already exist. Testing them is therefore not so interesting. However, new or modified parts or units can be tested on this test unit. An example of this is the new discharge unit.

The test unit is expected to run for long periods of time. It is possible to test different materials in selected parts and see how they wear out, deform etc. Changing to stronger or harder parts could improve the final folder.

The test unit is based on 250 ml package size. The principles and ideas can be used on all the final folders in the Tetra Brik family. It is for instance possible to use 200 slim packages, with minor changes.

8. CONCLUSIONS

The purpose of this master thesis was to create a proposal for a test unit to a final folder on a TBA/9-machine. The construction of a test unit would then be based on this report. The unit includes: an electrical motor with control equipment to drive the final folder at different speeds, instruments for measuring various parameters with a registration unit, a conveyer for transportation of packages round the final folder with a feeding unit and a magazine for semi-finished products and a control system with programmes.

One goal was to create a flexible and simple unit. It can then be expanded or diminished in the future, if desired. As many standard Tetra Pak parts as possible are used on the unit. The programmes are written for a TPMC-64.1 computer and for 250 ml packages. With minor changes other Tetra Brik packages can be used.

LIST OF BLOCKS

LIST OF ADDRESSES

930701 PER

Type: 64.1
Size: 4277
Blocks: 11
Rungs: 147
Addresses: 228

I/O Map:

```
   RACK    0        1        2        3        4        5        6        7
+---+---+--+--+  +--+--+  +--+--+  +--+--+  +--+--+  +--+--+  +--+--+  +--+--+
!   !   !O0!I4!  !  !  !  !  !  !  !  !  !  !  !  !  !  !  !  !  !  !  !  !  !
! P !   +--+--+  +--+--+  +--+--+  +--+--+  +--+--+  +--+--+  +--+--+  +--+--+
! O ! C !O1!I5!  !  !  !  !  !  !  !  !  !  !  !  !  !  !  !  !  !  !  !  !  !
! W !   +--+--+  +--+--+  +--+--+  +--+--+  +--+--+  +--+--+  +--+--+  +--+--+
! E ! U !I2!I6!  !  !  !  !  !  !  !  !  !  !  !  !  !  !  !  !  !  !  !  !  !
! R !   +--+--+  +--+--+  +--+--+  +--+--+  +--+--+  +--+--+  +--+--+  +--+--+
!   !   !O3!I7!  !  !  !  !  !  !  !  !  !  !  !  !  !  !  !  !  !  !  !  !  !
+---+---+--+--+  +--+--+  +--+--+  +--+--+  +--+--+  +--+--+  +--+--+  +--+--+
```

Fast I/O: Block90
Block99

Scan time: Block05-89: 10
Block90-98: 2
Block99: 1

Sector: 0 = 1 = 2 = 3 = 4 = 5 = 6 = 7 =

LIST OF ADDRESSES

Address	Position	Function			used in rungs
C002		Sequencer filling		cleantray	*9208, *9210
C010		Counter brake	function		*9604, *9608
CO002.1	110- 600	Allowed	fillingtime		9209
CO002.2	100- 110	Min.filling	time		9217
CO002.3	0- 20	Draining	time		9212
CO002.4	570- 572	Max.filling	time		9217
CV010					9605
D005	1s000	Delay queue	monitor		9010
D006	30s000	Delay con.	off		9305
D007	0s500	Flash gen.	1 Hz		9015
D008	0s500	Flash gen.	1 Hz		9015
D009	1s500	Delay rot.	fault		9011
D010	4s000	Delay fill.	cleantray		9209
D011	59m59s	Delay lubr.	fault		9012
D012	8s000	Delay lubr.	pressure		9107
D013	15s000	Delay lubr.	pressure		9107
D014	2s000	Delay	infeed con.		9008
D018	0s700	Acc. delay	rotation		9011
D030	1s000	Delay brake			9602
D031	0s090	delay fall	package		9603
D035	0s500	Delay by	cylinder		9507
D042	10s000	Delay cyl.	feeding		9013
I04.00		Pulldown	dev. on		9302
I04.01		Pressure	dev. on		9303
I04.02		Photocell	cylinder		9507
I04.03		Convveyer	on		9305
I04.04		Photodiode	PLE-eq.		9010
I04.05		Long lubr.	on		9109
I04.06		Cylinder on			9502, 9503
I04.07		Em. stop	reset		9218, 9306
I04.11		Cylinder	mag. on		9508, 9509
I04.12		Over	6000ind/h		9011

LIST OF ADDRESSES

Address	Position	Function				used in rungs
I04.13		Photocell	high			9602, 9603
I04.14		Photocell	low			9602, 9603
I04.15		Spraying	ordered			9702
I04.16		Heater on				9304
I04.17		Emergency	stop			9009, 9306
I05.00		Cleaning	ordered			9011, 9203, 9205
I05.01		Cleantray	level			9209, 9217
I05.04		Lubr. oil	pressure			9107, 9108
I05.05		Lubr. oil	low level			9012
I05.10		New	FF-station			9404
I05.11		Infeed	congestion			9008
I05.12		Hydr. oil	low level			9003
I05.13		Hydr. oil	high temp.			9004
I05.14		Lubr. oil	low level			9006
I05.15		Cleaning	ordered			9204
I05.17		Queue mon.	on			9010
M01.01		Emergency stop				*9009, 9014, 9106, 9203, 9205, 9206, 9207, 9208, 9209, 9214, 9215, 9216, 9217, *9306, 9405, 9406, 9409, 9410, 9502, 9503, 9508, 9509, 9702
M02.01						9402
M02.05		Motor low	speed			9102, 9103, 9206
M02.06						9604
M02.07		Time limit	pressure and	pulldown	devices	*9403, 9409, 9410
M02.12		Long lubrication				9102, 9103, 9104, *9109
M02.13						9903
M02.14						9904
M02.16		Pulse new FF-station				9011, *9404, 9405, 9504, 9510, 9604, 9903, 9904, 9905, 9906
M03.12		Startpulse	long lubric			9109

LIST OF ADDRESSES

Address	Position	Function		used in rungs
M04.17		Generating flash 1 Hz		9015, *9015, 9208
M05.03		Shiftpulse FF		9407
M05.04		Memory FF shiftbit		*9406, 9407, *9407
M05.05		Pulse new FF-station		9404
M05.10		Cylinder feeding	function	*9502, *9503, 9504, 9505
M05.11		Cylinder magazine		*9508, *9509, 9510, 9511
M06.00		Pulldown device on		*9302, 9409
M06.01		Pressure device on		*9303, 9410
M06.10		In position for	cleaning	9203, 9205, *9206, 9215
M06.11		In position for	cleaning	9202, 9203, *9203, 9204, 9214, 9219
M07.07		Package by cylinder		9505, *9507
M10.04		Hot water filling		9210, 9211
M10.05		Malfunction filling	cleantray by cleaning	9005, 9203, 9205, *9217, *9218
M10.07		Alarm low pressure	during lubrication	9007, *9107, *9108
M10.10		Auxiliary startsequence	cleaning	9205, *9205
M11.07		Long lubrication	period	*9104, *9105, 9106
M11.11		Fallen package		*9603, 9604, 9605, 9607, *9608
M14.02		Auxiliary output	stopsequence cleaning	9208, *9209, *9210, 9211, 9214
M15.00		Max runningtime with	lubrication fault	*9012, 9014, *9306
M15.01		Rotation fault		*9011, 9014, *9306
M15.05		Infeed congestion		*9008, 9014, *9306
M15.07		Fault cylinder	feeding	*9013, 9014, *9306
M15.10		Queue monitor		*9010, 9014, *9306
M23		Transmission word		*9408
M23.05				9802, 9831, 9832, 9838, 9839, 9840
M23.14		Transmis. bit		9410

LIST OF ADDRESSES

Address	Position	Function			used in rungs
M23.16		Transmis.	bit		9409
M23.17		Transmis.	bit		9409
M27.17					9851
M33.00					9804, 9827, 9845, 9855, *9856, *9857
M33.01					9805, 9828, 9845, 9854, *9855
M33.02					9806, 9829, 9845, 9853, *9854
M33.03					9807, 9830, 9845, 9852, *9853
M33.04					9834, 9835, 9836, 9837, 9838, 9839, 9840, 9845, 9849, 9850, *9852
M35					*9804, *9805, *9806, *9807
M35.00					9808, 9810, 9812, 9814, 9816, 9817, 9820, 9821, 9824, 9825, 9826
M35.01					9809, 9810, 9812, 9814, 9816, 9820, 9821, 9823, 9824, 9826
M35.02					9809, 9810, 9812, 9814, 9816, 9817, 9819, 9820, 9821, 9823, 9824, 9826
M35.03					9816, 9818, 9820, 9823
M36					9827, 9828, 9829, 9830
M36.02					*9808, *9809, *9810
M36.03					*9811, *9812
M36.04					*9813, *9814
M36.05					*9815, *9816, *9817
M36.06					*9818, *9819, *9820, *9821
M36.07					*9822, *9823, *9824
M36.10					*9825, *9826
M37.14		First scan			9215, 9402, 9857
M37.15		TPMC	battery low		9002
M37.17		Triggpulse for		shiftregister	*9407, *9850, 9856

LIST OF ADDRESSES

Address	Position	Function		used in rungs
000.00		Cleaning		*9202
000.01		Rinsing cleaning		*9207
000.02		Cleaning system	hot water	*9211, 9213, 9216
000.03		Cleaning traydraining		*9212, 9213, 9219
000.04		Detergent pump		*9213
000.05		Cleaning system	circulation pump	*9214
000.06		Station chain sprinkler		*9219
000.07		Central lubrication pump	air injection	*9106, 9107, 9108
000.10		Start conveyer		*9305
000.11		Pulldown device		*9409
000.12		Pressure device		*9410
000.13		TPMC battery low		*9002
000.14		Hydraulic oil low level		*9003
000.15		Hydraulic oil high temp.		*9004
000.16		Levelfault cleantray		*9005
000.17		Lubrication oil low level		*9006
001.00		Brake on		9013, *9602, *9607
001.01		Lubrication fault		*9007
001.02		Gate open		*9606
001.03		Infeed congestion		9406
001.04		Emergency stop		*9014
001.05		Heater on		*9304
001.06		Start conveyer		9010
001.07		Restart at mainfailure		*9841, *9842, *9843, *9844, *9845
001.11		Cylinder on		*9505, 9506
001.12		Cylinder off		*9506
001.13				*9846, *9847, *9848
001.14		Cylinder magazine on		*9511, 9512
001.15		Spray pump on		*9703
001.16		Cylinder magazine off		*9512
001.17		Frequency transformer	low speed motor	*9204
R0019		Shiftregister pulldown	pressure device	*9402, *9407, 9408

LIST OF ADDRESSES

Address	Position	Function		used in rungs
R0020		Set value displaybox		9802, *9802, 9803, 9831, 9832, 9833, *9906
R0022		Prog.number display		9831, 9832
R0024		r/min register		9902, *9902, 9903
R0101		r/min register		*9903, 9904
R0102		r/min register		*9904, 9905
R0103		r/min register		*9905, 9906
R0150				9403
R0200		Set-value display BCD		*9803, 9804, 9805, 9806, 9807
R0201		Data for digit 1 & 2 LSD		*9834, 9835, *9835, *9838, 9841
R0202		Data for digit 3 & 4 MSD		9827, *9836, 9837, *9837, 9839, *9839, 9843
R0203		Data for display symbols		9827, *9840, 9844
R0204		Shiftregister 1		9841, 9842, 9846, *9849, *9851
R0205		Shiftreg 2		9843, 9847, 9849, 9851
R0206		Shiftreg 3		9844, 9848, 9849, 9851
R0207		Data for digit 1		*9827, 9834
R0210		Data for digit 2		*9828, *9831, 9835
R0211		Data for digit 3		*9829, *9832, 9836
R0212		Data for digit 4		*9830, *9833, 9837
T008		Sequencer cleaning		*9215, *9216
T009		Startsequence cleaning		*9205
T010		Sequencer lubrication	program	*9103
T011		Sequencer lubrication	program	*9102
T014		FF-timer		*9405
T015		Timer cylinder	function	*9504
T016		Timer cylinder magazine	function	*9510
T017		Timer spray function		*9702
T020		Timer brake function		*9605
TO008.0	22m30s 22m40s	Total cleantime		9203
TO008.1	1s 2m20s	First rince cleaning		9207, 9219
TO008.2	3m20s 12m20s	Cleanper. cleaning		9207, 9213

LIST OF ADDRESSES

Address	Position	Function		used in rungs
TO008.3	13m30s 15m50s	Sec. rinse	cleaning	9207, 9219
TO008.4	17m00s 19m20s	Third rinse	cleaning	9207
TO008.5	19m20s 19m30s	Lubr. after	cleaning	9109
TO010.0	15m00s 15m02s	Time lubr.	period	9103
TO010.1	2m51s 15m02s	Pause	lubr. per.	9103, 9105
TO010.2	0s 10s	1st stroke	lubr.	9106
TO010.3	41s 51s	2nd stroke	lubr.	9106
TO010.4	1m21s 1m30s	3rd stroke	lubr.	9106
TO010.5	2m00s 2m10s	4th stroke	lubr.	9106
TO011.0	15m00s 15m02s	Time lubr.	period	9102
TO011.1	2m51s 15m02s	Pause lubr.	period	9102
TO011.5	2m40s 2m50s	5th stroke	lubr.	9106
TO014.0	0s000 5s000	FF-timer	end	9405
TO014.1	0s300 0s400	FF-timer	prod.	9405
TO014.2	0s150 0s270	Pulldown	device	9409
TO014.3	0s000 0s280	Pres. dev.	new station	9407, 9408, 9410
TO015.0	0s000 6s500	Timer	cylinder	9504

LIST OF ADDRESSES

Address	Position	Function		used in rungs
T0015.1	0s300 0s350	Timer	cylinder	9504
T0015.2	0s000 0s150	Timer	cylinder	9505
T0016.0	0s000 6s500	Timer cyl.	mag.	9510
T0016.1	0s300 0s350	Timer cyl.	mag.	9510
T0016.2	0s000 0s150	Timer cyl.	mag.	9511
T0017.0	1h00m00s 1h00m10s	Timer spray	func.	9702
T0017.1	59m50s 59m59s	Timer spray	func.	9703
T0020.0	0s000 5s000	Timer	brake func.	9605, 9606
T0020.1	0s000 0s500	Timer	brake func.	9608

Test unit final folder

```
0501|--[05 BLK]----------------------------------------------------------------|
```

Alarm systems

9001	90 [BLK]				
9002	TPMC battery low M37.15]/[			000.13 ( )	TPMC battery low
9003	Hydr. oil low level I05.12]/[			000.14 ( )	Hydraulic oil low level
9004	Hydr. oil high temp. I05.13]/[			000.15 ( )	Hydraulic oil high temp.
9005	Levelfault cleantray M10.05]/[			000.16 ( )	Levelfault cleantray
9006	Lubr. oil low level I05.14]/[			000.17 ( )	Lubrication oil low level
9007	Lubrication fault M10.07]/[			001.01 ( )	Lubrication fault
9008	Infeed congestion I05.11]/[	Delay infeed con. D014 [DON] 2s000		M15.05 (L)	Infeed congestion
9009	Emergency stop I04.17]/[			M01.01 (L)	Emergency stop
9010	Start conveyer 001.06]/[	Queue mon. on I05.17]/[	Photodiode PLE-eq. I04.04]/[	Delay queue monitor D005 [DON] 1s000 M15.10 (L)	Queue monitor

```
      Over        Acc. delay   Pulse new   Delay rot.   Cleaning
    6000ind/h     rotation     FF-station    fault      ordered
      I04.12        D018        M02.16       D009       I05.00                                          M15.01
9011---] [----[DON]----]/[----[DON]----]/[-------------------------------------------------------(L)---Rotation fault
                  0s700                      1s500

    Lubr. oil   Delay lubr.
    low level      fault
      I05.05        D011                                                                              M15.00
9012---] [----[DON]-------------------------------------------------------------------------------(L)---Max runningtime with
                 59m59s                                                                                 lubrication fault

                Delay cyl.
    Brake on      feeding                                                                             M15.07
9013---] [----[DON]-------------------------------------------------------------------------------(L)---Fault cylinder
      Q01.00       D042                                                                                   feeding
                  10s000

    Emergency
      stop                                                                                            Q01.04
9014---] [-------------------------------------------------------------------------------------------( )---Emergency stop
      M01.01
     |
     |  Rotation
     |    fault
     |   M15.01
     |---] [---+
     |
     |  Infeed
     |congestion
     |   M15.05
     |---] [---+
     |
     |Max runtime
     |w.lubr.faul
     |   M15.00
     |---] [---+
     |
     |  Queue
     |  monitor
     |   M15.10
     |---] [---+
     |
     |Fault cyl.
     |  feeding
     |   M15.07
     |---] [---+
     |
    Generating   Flash gen.   Generating   Flash gen.                                                  M04.17
9015---]/[----[DON]----]/[----[DOF]-------------------------------------------------------------------( )---Generating flash 1 Hz
     flash 1Hz     1  Hz      flash 1Hz      1 Hz
      M04.17       D007        M04.17       D008
                  0s500                      0s500
```

Lubrication

```
9101 --[91 BLK]------------------------------------------------------------------------------------------------

     Outputpulse  Time lubr.
     long lubric  period
       M02.12     T0011.0
9102---]/[---*---]/[-------------------------------------------------------------------------(T011 TRN)---Sequencer lubrication
             |    15m00s                                                                                program
             |    15m02s
             |
             |  Pause lubr.   Motor low
             |    period        speed
             |   T0011.1       M02.05
             *---]  [------]/[-------------------------------------------------------------------(T011 THD)---Sequencer lubrication
                  2m51s                                                                                   program
                  15m02s

     Outputpulse  Time lubr.
     long lubric  period
       M02.12     T0010.0
9103---]/[---*---]/[-------------------------------------------------------------------------(T010 TRN)---Sequencer lubrication
             |    15m00s                                                                                program
             |    15m02s
             |
             |   Pause      Motor low
             |  lubr. per.    speed
             |   T0010.1     M02.05
             *---]  [------]/[-------------------------------------------------------------------(T010 THD)---Sequencer lubrication
                  2m51s                                                                                   program
                  15m02s

     Outputpulse
     long lubric
       M02.12
9104---]  [----------------------------------------------------------------------------------------(M11.07 L)---Long lubrication
                                                                                                               period

      Pause
     lubr. per.
      T0010.1
9105---]  [----------------------------------------------------------------------------------------(M11.07 U)---Long lubrication
                                                                                                               period
       2m51s
       15m02s
```

```
      2nd stroke   Long        Emergency
        lubr.      lubrication   stop
      T0010.3      M11.07       M01.01                                  000.07
9106---] [-------] [-------]/[-------------------------------------------( )---  Central lubrication pump
        41s                                                                       air injection
        51s

      3rd stroke
        lubr.
      T0010.4
   ---] [---+
        1m21s
        1m30s

      4th stroke
        lubr.
      T0010.5
   ---] [---+
        2m00s
        2m10s

      5th stroke
        lubr.
      T0011.5
   ---] [---+
        2m40s
        2m50s

      1st stroke
        lubr.
      T0010.2
   ---] [----------+
        0s
        10s

      Central      Delay lubr.   Lubr. oil
      lubric.pump  pressure      pressure
      000.07       D012          I05.04                                  M10.07
9107---] [-----[DON]-----]/[-------------------------------------------(L)---  Alarm low pressure
                 8s000                                                            during lubrication

      Central      Lubr. oil     Delay lubr.
      lubric.pump  pressure      pressure
      000.07       I05.04        D013
   ---]/[-------] [-----[DON]---+
                              15s000

      Central      Lubr. oil
      lubric.pump  pressure
      000.07       I05.04                                                  M10.07
9108---] [-------] [-------------------------------------------------------(U)---  Alarm low pressure
                                                                                   during lubrication
```

```
      |Lubr. after   Startpulse                                                                  |
      | cleaning     long lubric                                                                  |
      | T0008.5      M03.12                                                          M02.12       |
9109---] [-----------[P+]-------------------------------------------------------------( )---Long lubrication
      | 19m20s                                                                                   |
      | 19m30s                                                                                   |
      |                                                                                          |
      | Long lubr.                                                                               |
      |    on                                                                                    |
      | I04.05                                                                                   |
      |---] [---+                                                                                |
```

Cleaning

```
9201 --[92 BLK]------------------------------------------------------------------------------------------
     External
     cleaning
     M06.11
9202---] [-------------------------------------------------------------------------------------( 000.00 )---Cleaning

     Cleaning   Levelfault  Ready      Total      Emergency
     ordered    cleantray   cleaning   cleantime  stop
     I05.00     M10.05      M06.10     T0008.0    M01.01
9203---] [-----+---]/[-----] [-----]/[-----]/[-----------------------------------------------( M06.11 )---In position for
                |                     22m30s
                |                     22m40s
     External   |
     cleaning   |
     M06.11     |
   ---] [-------+

     External
     cleaning
     M06.11
9204---] [-----+-------------------------------------------------------------------------------( 001.17 )---Frequency transformer
                |                                                                                low speed  motor
     Cleaning   |
     ordered    |
     I05.15     |
   ---] [-------+

     Cleaning   Emergency  Levelfault  Ready
     ordered    stop       cleantray   cleaning
     I05.00     M01.01     M10.05      M06.10
9205---] [-----+---]/[-----]/[-----] [---*-----------------------------------------------( T009 )---Startsequence cleaning
                |                       |                                                 (TRN)
     Aux.starts.|                       |
     cleaning   |                       |                                                 M10.10
     M10.10     |                       *-----------------------------------------------( )---Auxiliary startsequence
   ---] [-------+                                                                                cleaning

     Motor low  Emergency
     speed      stop
     M02.05     M01.01
9206---] [-----]/[-----------------------------------------------------------------------( M06.10 )---In position for
                                                                                                cleaning
```

```
      First rince   Emergency
       cleaning       stop
       T0008.1      M01.01                                                  000.01
9207 --] [-------+---]/[-------------------------------------------------( )---Rinsing cleaning
          1s     |
        2m20s    |
                 |
      Cleanper.  |
       cleaning  |
       T0008.2   |
     ---] [------+
        3m20s    |
       12m20s    |
                 |
      Sec. rinse |
       cleaning  |
       T0008.3   |
     ---] [------+
       13m30s    |
       15m50s    |
                 |
      Third rinse|
       cleaning  |
       T0008.4   |
     ---] [------+
       17m00s    |
       19m20s    |

      Aux.output   Generating   Emergency
      stops.clean   flash 1Hz      stop
        M14.02      M04.17       M01.01                                    C002
9208 ---]/[-----]  [-----]/[-----------------------------------------------(CTU)---Sequencer filling
                                                                                   cleantray

      Cleantray   Delay fill.   Allowed     Emergency
        level      cleantray   fillingtime    stop
       I05.01       D010       C0002.1      M01.01                          M14.02
9209 ---] [-----[DON]-----] [-----]/[-------------------------------------(L)---Auxiliary output
                 4s000       110-600                                               stopsequence cleaning

      Hot water
       filling
       M10.04                                                               M14.02
9210 ---]/[---*-------------------------------------------------------------(U)---Auxiliary output
              |                                                                    stopsequence cleaning
              |                                                              C002
              *-------------------------------------------------------------(CTR)---Sequencer filling
                                                                                   cleantray

      Hot water   Aux.output
       filling    stops.clean
       M10.04       M14.02                                                  000.02
9211 ---] [-----]/[-------------------------------------------------------( )---Cleaning system
                                                                                   hot water
```

```
9212 Draining time C0002.3 0-20 ---]/[--------------------------------------------------------( )--- 000.03 Cleaning traydraining

9213 Cleaning system 000.02 ---] [ Cleaning traydrain. 000.03 ---] [ Cleanper. cleaning T0008.2 3m20s 12m20s ---] [--------------( )--- 000.04 Detergent pump

9214 External cleaning M06.11 ---] [ Aux.output stops.clean M14.02 ---] [ Emergency stop M01.01 ---]/[--------------( )--- 000.05 Cleaning system circulation pump

9215 Ready cleaning M06.10 ---] [ First scan M37.14 ---]/[ Emergency stop M01.01 ---]/[--------------(TRN)-- T008 Sequencer cleaning

9216 Cleaning system 000.02 ---] [ Emergency stop M01.01 ---]/[--------------(THD)-- T008 Sequencer cleaning

9217 Cleantray level I05.01 ---] [ Min.filling time C0002.2 100-110 ---] [ Emergency stop M01.01 ---]/[--------------(L)--- M10.05 Malfunction filling cleantray by cleaning
     Max.filling time C0002.4 570-572 ---] [

9218 Em. stop reset I04.07 ---] [--------------(U)--- M10.05 Malfunction filling cleantray by cleaning
```

```
        External     Cleaning     First rince
        cleaning     traydrain.   cleaning
        M06.11       000.03       T0008.1                                                  000.06
9219---] [-----] [---+---] [---+-------------------------------------------------------( )---Station chain sprinkler
                                1s
                               2m20s

                             Sec. rinse
                              cleaning
                              T0008.3
                           +---] [---+
                              13m30s
                              15m50s
```

On and off functions

```
9301 --[93 BLK]----------------------------------------------------------------------
     Pulldown
      dev. on
      I04.00
9302--] [-------------------------------------------------------------------( M06.00 )---Pulldown device on
     Pressure
     dev.  on
      I04.01
9303--] [-------------------------------------------------------------------( M06.01 )---Pressure device on
     Heater on
      I04.16
9304--] [-------------------------------------------------------------------( O01.05 )---Heater on
     Convveyer     Delay con.
       on            off
      I04.03        D006
9305--] [----[DOF 30s000]-----------------------------------------------------( O00.10 )---Start conveyer
     Em. stop      Emergency
      reset          stop
      I04.07        I04.17
9306--] [------] [--*-------------------------------------------------------( M01.01 )---Emergency stop
                    |
                    *-------------------------------------------------------( M15.01 )---Rotation fault
                    |
                    *-------------------------------------------------------( M15.00 )---Max runningtime with
                                                                                          lubrication fault
                    |
                    *-------------------------------------------------------( M15.05 )---Infeed congestion
                    |
                    *-------------------------------------------------------( M15.10 )---Queue monitor
                    |
                    *-------------------------------------------------------( M15.07 )---Fault cylinder
                                                                                          feeding
```

Final folder functions

```
9401 --[94 BLK]------------------------------------------------------------------------------------------------------------

     First scan
       M37.14        K00000      M02.01                                                                  R0019
9402 ---] [-----[GET]-----[P+]-------------------------------------------------------------------------(PUT)---  Shiftregister pulldown
                                                                                                                 pressure device

       R0150       K00047      K00100      K00600                                                        M02.07
9403 --[GET]-----[*]-------[:]-------[<]-----------------------------------------------------------------( )----  Time limit  pressure and
                                                                                                                 pulldown  devices

       New         Pulse new
     FF-station    FF-station
       I05.10       M05.05                                                                               M02.16
9404 ---] [-------[P+]-------------------------------------------------------------------------------------( )----  Pulse new FF-station

     Pulse new     FF-timer     Emergency
     FF-station     prod.         stop
       M02.16      T0014.1       M01.01                                                                   T014
9405 ---] [-----+---]/[-------]/[-------------------------------------------------------------------------(TRN)---  FF-timer
                |   0s300
                |   0s400
                |
     FF-timer   |
       end      |
     T0014.0    |
   ---] [-------+
     0s000
     5s000

     Infeed      Emergency
    congestion     stop
      O01.03      M01.01                                                                                  M05.04
9406 ---] [-------]/[-------------------------------------------------------------------------------------(L)----  Memory FF shiftbit

     Pres. dev.   Shiftpulse     Mem FFU
    new station      FF          shiftbit
      T0014.3      M05.03       M05.04                                                                   M37.17
9407 ---] [-------[P-]---*---] [-------------------------------------------------------------------------( )----  Triggpulse for
     0s000                |                                                                                       shiftregister
     0s280                |
                          |                                                                              R0019
                          *-------------------------------------------------------------------------(SHR)---  Shiftregister pulldown
                          |                                                                                       pressure device
                          |                                                                              M05.04
                          *-------------------------------------------------------------------------(U)----  Memory FF shiftbit
```

```
      Pres. dev.
      new station
        T0014.3          R0019                                                   M23
9408 ---] [----[GET]-------------------------------------------------------(PUT)--Transmission word
        0s000
        0s280

      Transmis.   Pulldown    Emergency   Pulldown    Time limit
        bit       device      stop        device on   devices
      M23.17      T0014.2     M01.01      M06.00      M02.07                    000.11
9409 ---] [--+---] [-----]/[-----] [-----] [-----------------------------------( )---Pulldown device
             |    0s150
             |    0s270
      Transmis.
        bit
      M23.16
    ---] [---+

      Transmis.   Pres. dev.  Emergency   Pressure    Time limit
        bit       new station stop        device on   devices
      M23.14      T0014.3     M01.01      M06.01      M02.07                    000.12
9410 ---] [-----] [-----]/[-----] [-----] [-----------------------------------( )---Pressure device
                  0s000
                  0s280
```

Cylinder function

```
9501 --[95 BLK]------------------------------------------------------------------------------------------------------------

                Cylinder on   Emergency
                  I04.06        stop
                               M01.01                                                                   M05.10
9502 ---] [-----]/[-------------------------------------------------------------------------------------(L)---  Cylinder feeding
                                                                                                                function

                Emergency
                  stop
                M01.01                                                                                  M05.10
9503 ---] [-----+-------------------------------------------------------------------------------------(U)---  Cylinder feeding
                                                                                                                function
                Cylinder on
                  I04.06
     ---]/[-----+

                Pulse new     Timer
                FF-station   cylinder    Cylinder on                                                    T015
                  M02.16     T0015.1       M05.10                                                       (TRN)--  Timer cylinder
9504 ---] [-----+---]/[------]  [-------------------------------------------------------------------------------  function
                             0s300
                             0s350
                Timer
                cylinder
                T0015.0
     ---]  [----+
                0s000
                6s500

                              Timer      Package by                                                      O01.11
                Cylinder on  cylinder     cylinder
                  M05.10     T0015.2       M07.07                                                        ( )---  Cylinder on
9505 ---] [-----]  [-----]/[-------------------------------------------------------------------------------
                             0s000
                             0s150

                Cylinder
                  on
                O01.11                                                                                  O01.12
9506 ---]/[-------------------------------------------------------------------------------------------( )---  Cylinder off

                Photocell    Delay  by
                cylinder     cylinder                                                                   M07.07
                  I04.02       D035                                                                      ( )---  Package by cylinder
9507 ---] [-----[DON]-------------------------------------------------------------------------------------
                             0s500
```

```
9508 Cylinder mag. on I04.11 ---] [----- Emergency stop M01.01 ]/[------------------------------------------ M05.11 (L) --- Cylinder magazine

9509 Emergency stop M01.01 ---] [--+------------------------------------------------------------------------ M05.11 (U) --- Cylinder magazine
                                   |
     Cylinder mag. on I04.11 ---]/[--+

9510 Pulse new FF-station M02.16 ---] [--+--- Timer cyl. mag. T0016.1 ]/[------ Cylinder mag. on M05.11 ] [------------------------------ T016 (TRN) --- Timer cylinder magazine
                                         |   0s300                                                                                                  function
                                         |   0s350
     Timer cyl. mag. T0016.0 ---] [--+
                                     |
                                     0s000
                                     6s500

9511 Cylinder mag. on M05.11 ---] [----- Timer cyl. mag. T0016.2 ] [------------------------------------------ 001.14 ( ) --- Cylinder magazine on
                                         0s000
                                         0s150

9512 Cylinder mag. on 001.14 ---]/[------------------------------------------------------------------------- 001.16 ( ) --- Cylinder magazine off
```

Brake function

```
9601 --[96 BLK]------------------------------------------------------------------------------------
     Photocell high I04.13 ---] [----- Photocell low I04.14 -----] [---- Delay brake D030 [DON] 1s000 ----------( O01.00 )---Brake on
9602
     Photocell low I04.14 ---] [---- delay fall package D031 [DON] 0s090 ----]/[ Photocell high I04.13 ----------(L) M11.11 )---Fallen package
9603
     Fallen package M11.11 ---] [----- Pulse new FF-station M02.16 -----] [----- M02.06 [P+] ----------(CTU) C010 )---Counter brake function
9604
     Fallen package M11.11 ---] [---- CV010 [GET] ---- K00003 [=] ----------(TRN) T020 )---Timer brake function
9605
     Timer brake func. T0020.0 ---] [---------------------+
     0s000
     5s000
     Timer brake func. T0020.0 ---] [---------------------------------------------------------( O01.02 )---Gate open
9606
     0s000
     5s000
     Fallen package M11.11 ---] [-------------------------------------------------------------( O01.00 )---Brake on
9607
```

```
      Timer
    brake func.
      T0020.1
9608---]  [--*-------------------------------------------------------------(CTR)--Counter brake function
      0s000   |                                                            C010
      0s500   |
              |
              *-------------------------------------------------------------(U)---Fallen package
                                                                           M11.11
```

Product spray function

```
9701 --[97 BLK]-------------------------------------------------------------------------
     Spraying   Timer spray   Emergency
      ordered     func.         stop
      I04.15     T0017.0      M01.01                                          T017
9702--]  [------]/[-------]/[-------------------------------------------------(TRN)--Timer spray function
                 1h00m00s
                 1h00m10s

     Timer spray
       func.
      T0017.1                                                                 O01.15
9703--]  [-------------------------------------------------------------------( )----Spray pump on
       59m50s
       59m59s
```

TPMC-PROGRAMME LIST

Display function

```
            98
9801 |--[BLK]-------------------------------------------------------------------------------|
                    Set   value
                     displaybox
       M23.05          R0020       K00100                                         R0020
9802 +--]/[----[GET]----[*]----------------------------------------------------(PUT)--+Set value displaybox
      Set   value
       displaybox
        R0020                                                                    R0200
9803 +-[GET]---[BCD]---------------------------------------------------------------(PUT)--+Set-value display BCD
                    Set value
                    BCD-coded
       M33.00         R0200                                                        M35
9804 +--]  [----[GET]-------------------------------------------------------------(PUT)--+
                    Set value
                    BCD-coded
       M33.01         R0200       K0010H                                          M35
9805 +--]  [----[GET]----[:]-----------------------------------------------------(PUT)--+
                    Set value
                    BCD-coded
       M33.02         R0200       K0100H                                          M35
9806 +--]  [----[GET]----[:]-----------------------------------------------------(PUT)--+
                    Set value
                    BCD-coded
       M33.03         R0200       K1000H                                          M35
9807 +--]  [----[GET]----[:]-----------------------------------------------------(PUT)--+
       M35.00                                                                    M36.02
9808 +--]/[--------------------------------------------------------------------( )---+
       M35.02      M35.01                                                        M36.02
9809 +--]  [------[X]--------------------------------------------------------------(L)---+
       M35.02      M35.01      M35.00                                            M36.02
9810 +--]  [------]/[------]/[---------------------------------------------------(U)---+
                                                                                 M36.03
9811 +---------------------------------------------------------------------------( )---+
       M35.02      M35.01      M35.00                                            M36.03
9812 +--]/[------]  [------]/[---------------------------------------------------(U)---+
```

"PROGRAMME TEST UNIT FF"   Mach No: 1000/0000   Page: 1

AM: 00000   Date: 930701   Sign: PER   LS (TPIH-2000)   -98:01   Cont: 2

```
9813 ------------------------------------------------------------------------------------------ M36.04 ( )
9814 ---] M35.01 [-----[X]-----] M35.00 [-----] M35.02 [---------------------------------------- M36.04 (U)
9815 ------------------------------------------------------------------------------------------ M36.05 ( )
9816 ---]/M35.03 [-----]/M35.02 [-----]/M35.01 [-----] M35.00 [-------------------------------- M36.05 (U)
9817 ---] M35.02 [-----]/M35.00 [-------------------------------------------------------------- M36.05 (U)
9818 ---] M35.03 [------------------------------------------------------------------------------ M36.06 ( )
9819 ---] M35.02 [------------------------------------------------------------------------------ M36.06 (L)
9820 ---]/M35.03 [-----]/M35.02 [-----]/M35.01 [-----]/M35.00 [-------------------------------- M36.06 (L)
9821 ---] M35.02 [-----] M35.01 [-----] M35.00 [---------------------------------------------- M36.06 (U)
9822 ------------------------------------------------------------------------------------------ M36.07 ( )
9823 ---]/M35.03 [-----]/M35.02 [-----]/M35.01 [---------------------------------------------- M36.07 (U)
9824 ---] M35.02 [-----] M35.01 [-----] M35.00 [---------------------------------------------- M36.07 (U)
9825 ---]/M35.00 [------------------------------------------------------------------------------ M36.10 ( )
9826 ---] M35.02 [-----]/M35.01 [-----]/M35.00 [---------------------------------------------- M36.10 (U)
```

TPMC-PROGRAMME LIST

```
                                                                                                    Data for     Data  for
                                                                                                    symbols      digit 3&4
       M33.00       M36        K00000                                                                R0203        R0202        R0207
9827+--] [----[GET]---[GTH]----------------------------------------------------------------------(PTH)---(PTH)---(PTH)---(PUT)--+Data for digit 1

       M33.01       M36                                                                                                        R0210
9828+--] [----[GET]----------------------------------------------------------------------------------------------------------(PUT)--+Data for digit 2

       M33.02       M36                                                                                                        R0211
9829+--] [----[GET]----------------------------------------------------------------------------------------------------------(PUT)--+Data for digit 3

       M33.03       M36                                                                                                        R0212
9830+--] [----[GET]----------------------------------------------------------------------------------------------------------(PUT)--+Data for digit 4

                  Set   value                Prog.number
                  displaybox                   display
       M23.05       R0020       K00010          R0022        K00001       K00002       K00000                                  R0210
9831+--] [----[GET]----[<]----[GET]----[=/]----[=/]---[GET]--------------------------------------------------------------(PUT)--+Data for digit 2

                  Set   value                Prog.number
                  displaybox                   display
       M23.05       R0020       K00100          R0022        K00001       K00002       K00000                                  R0211
9832+--] [----[GET]----[<]----[GET]----[=/]----[=/]---[GET]--------------------------------------------------------------(PUT)--+Data for digit 3

     Set   value
     displaybox
       R0020       K01000      K00000                                                                                          R0212
9833+-[GET]----[<]----[GET]--------------------------------------------------------------------------------------------------(PUT)--+Data for digit 4

                  Data dig. 1
       M33.04       R0207                                                                                                      R0201
9834+--] [----[GET]----------------------------------------------------------------------------------------------------------(PUT)--+Data for digit 1 & 2 LSD

                                           Data for
                  Data dig. 2              digit 1&2
       M33.04       R0210       K0080H      R0201                                                                              R0201
9835+--] [----[GET]----[*]-----[OR]------------------------------------------------------------------------------------------(PUT)--+Data for digit 1 & 2 LSD

                  Data dig. 3
       M33.04       R0211       K0004H                                                                                         R0202
9836+--] [----[GET]----[:]-------------------------------------------------------------------------------------------------(PUT)--+Data for digit 3 & 4 MSD

                                           Data  for
                  Data dig. 4              digit 3&4
       M33.04       R0212       K0020H      R0202                                                                              R0202
9837+--] [----[GET]----[*]-----[OR]------------------------------------------------------------------------------------------(PUT)--+Data for digit 3 & 4 MSD

       M33.04     M23.05       K4080H                                                                                          R0201
9838+--] [-----]/[----[GET]--------------------------------------------------------------------------------------------------(PUT)--+Data for digit 1 & 2 LSD
```

```
                                Data for
                                digit 3&4
9839 M33.04   M23.05            R0202      K1000H                                  R0202
     ---] [-----]/[----[GET]----[+]-------------------------------------------(PUT)--Data for digit 3 & 4 MSD

9840 M33.04   M23.05            K0020H                                          R0203
     ---] [-----]/[----[GET]-------------------------------------------------(PUT)--Data for display symbols

     Shiftreg. 1   Data for
                   digit 1&2
9841 R0204         R0201      K00000                                          001.07
     --[GET]---[AND]----[>]-------------------------------------------------(L)---Restart at mainfailure

     Shiftreg. 1
9842 R0204         K0003H     K00000                                          001.07
     --[GET]---[AND]----[>]-------------------------------------------------(L)---Restart at mainfailure

     Shiftreg 2    Data for
                   digit 3&4
9843 R0205         R0202      K00000                                          001.07
     --[GET]---[AND]----[>]-------------------------------------------------(L)---Restart at mainfailure

     Shiftreg 3    Data for
                   symbols
9844 R0206         R0203      K00000                                          001.07
     --[GET]---[AND]----[>]-------------------------------------------------(L)---Restart at mainfailure

9845 M33.00                                                                   001.07
     ---] [-------------------------------------------------------------------(L)---Restart at mainfailure
     |
     |  M33.01
     |---] [---+
     |         |
     |  M33.02 |
     |---] [---+
     |         |
     |  M33.03 |
     |---] [---+
     |         |
     |  M33.04 |
     |---] [---+
     |
     |  Shiftreg. 1
9846 |  R0204         KAAA8H     K00000                                          001.13
     |--[GET]---[AND]----[>]-------------------------------------------------(L)---
```

```
      Shiftreg 2
        R0205          KAAAAH       K00000                                                                  001.13
9847--[GET]---[AND]----[>]-------------------------------------------------------------------------------(L)---

      Shiftreg 3
        R0206          KAAAAH       K00000                                                                  001.13
9848--[GET]---[AND]----[>]-------------------------------------------------------------------------------(L)---

                                                                                Shiftreg 3   Shiftreg 2
        M33.04         K00000                                                     R0206        R0205        R0204
9849---]  [----[GET]-----------------------------------------------------------(PUT)---(PUT)---(PUT)--Shiftregister  1

        M33.04                                                                                          M37.17   Triggpulse for
9850---]  [-----------------------------------------------------------------------------------------( )---shiftregister

                                                                                Shiftreg 3   Shiftreg 2
        M27.17                                                                     R0206        R0205        R0204
9851---]/[-----------------------------------------------------------------------(SHR)---(SHR)---(SHR)--Shiftregister  1

        M33.03                                                                                          M33.04
9852---]  [-----------------------------------------------------------------------------------------( )---

        M33.02                                                                                          M33.03
9853---]  [-----------------------------------------------------------------------------------------( )---

        M33.01                                                                                          M33.02
9854---]  [-----------------------------------------------------------------------------------------( )---

        M33.00                                                                                          M33.01
9855---]  [-----------------------------------------------------------------------------------------( )---

      Triggpulse
      shiftregist
        M37.17                                                                                          M33.00
9856---]  [-----------------------------------------------------------------------------------------( )---

      First scan
        M37.14                                                                                          M33.00
9857---]  [-----------------------------------------------------------------------------------------(L)---
```

Fast scanning

```
9901 --[BLK 99]-------------------------------------------------------------------------
     r/min register R0024
9902--[GET]----[+ K00001]-------------------------------------------------------(PUT R0024)--r/min register
     Pulse new FF-station M02.16                                                r/min register R0024
9903---] [-----[P+ M02.13]---[GET r/min register R0024]---[GTH K00000]-----------(PTH)---(PUT R0101)--r/min register
     Pulse new FF-station M02.16                                  r/min register R0101
9904---] [-----[P+ M02.14]---[GET K60000]----[:]-------------------------------------(PUT R0102)--r/min register
     Pulse new FF-station M02.16  r/min register R0102
9905---] [----[GET]----[: K01000]-----------------------------------------------------(PUT R0103)--r/min register
     Pulse new FF-station M02.16                r/min register R0103
9906---] [----[GET K03600]----[:]-------------------------------------------------------(PUT R0020)--Set value displaybox
9907 --[END]----------------------------------------------------------------------------
```

PRE-RELEASED/DEVELOPMENT STATE

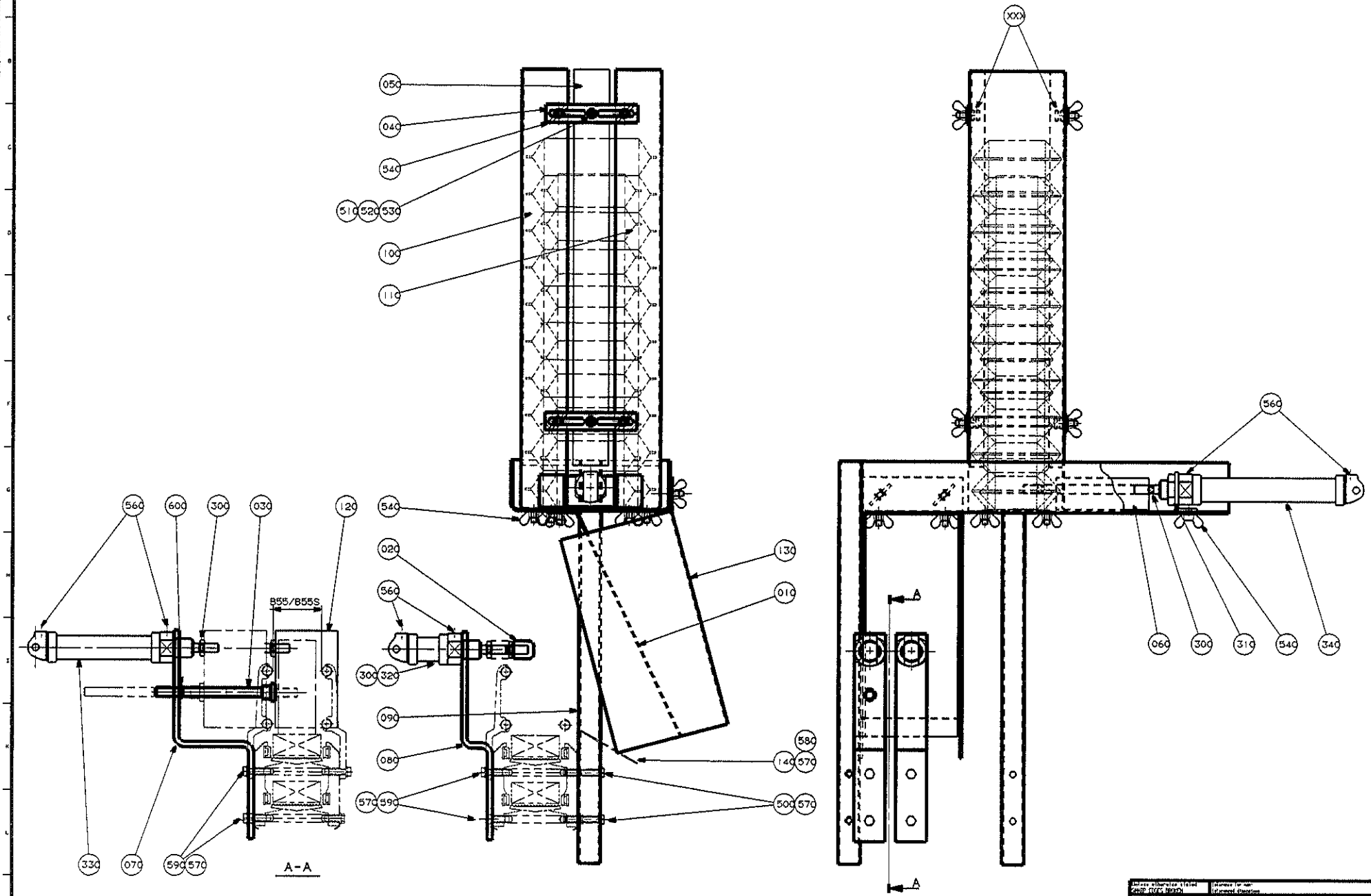

Unless otherwise stated Geom. DOC. REF.	Reference for non-licensed drawings	S-978944 Assembly drawing
Marked with PART NUMBER	Scale 1:2	
Tetra Pak LUND SWEDEN	MAGASIN MAGAZINE	S1-978942-1

PRE-RELEASED/DEVELOPMENT STATE

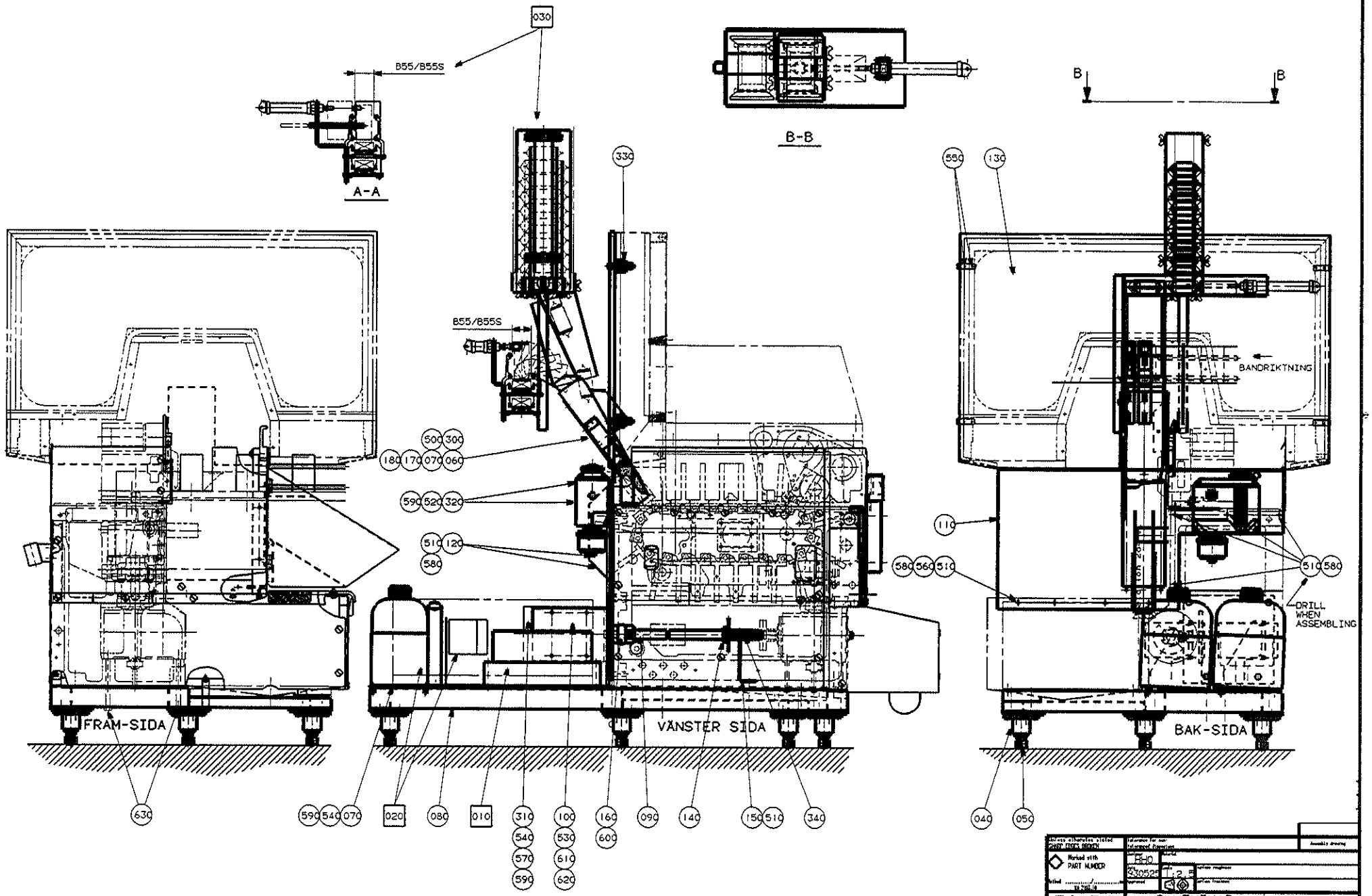

Unless otherwise stated
SHRT TOLL SBOCH
Marked with PART NUMBER

Tolerances for non toleranced dimensions
ISO 2768-mK
Material
H10
Surface roughness
Surface treatment
Assembly drawing

Tetra Pak
LUND SWEDEN

SLUTVIKAR
FINAL FOLDER

S1-978944-1

PRE-RELEASED/DEVELOPMENT STATE

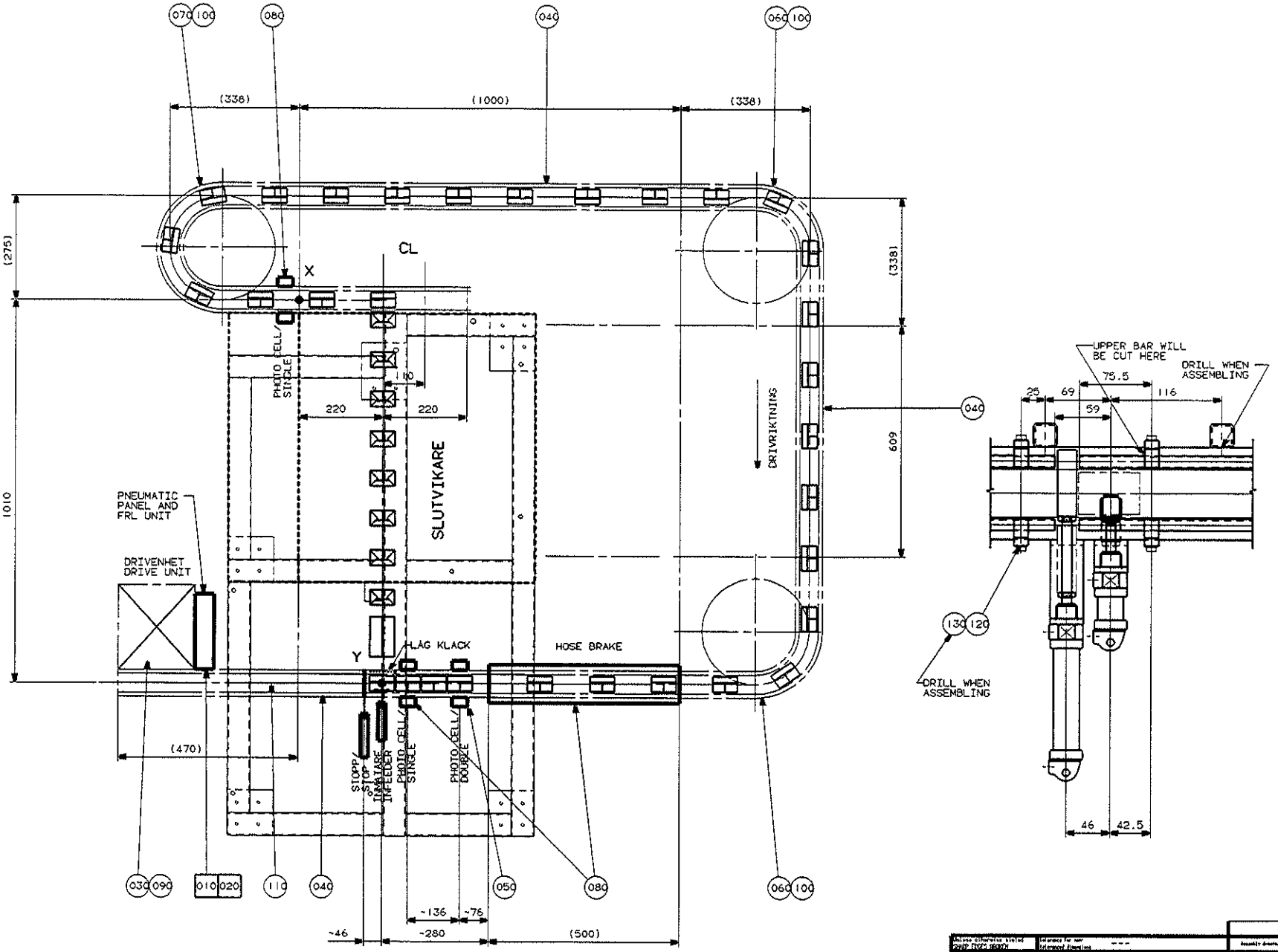

KEDJANS LÄNGD MELLAN PUNKT X OCH Y ÄR 4450mm DVS.EN STIGNINGSVINKEL PÅ 4.5°.
THE LENGTH OF THE CHAIN BETWEEN POINT X AND Y IS 4450mm WITCH GIVES YOU AN ANGLE OF 4.5°.
HÖJDSKILLNAD MELLAN PUNKT X OCH Y ÄR 350MM.
THE DIFFERENCE IN HEIGHT BETWEEN POINT X AND Y IS 350mm.

Unless otherwise stated POST TOOL DEBURR

Marked with PART NUMBER

Tetra Pak LUND SWEDEN

Reference for new Reference drawing

Assembly drawing

FHO

930524

1:5

SLUTVIKARE FINAL FOLDER

SI-978946-1

PRE-RELEASED/DEVELOPMENT STATE

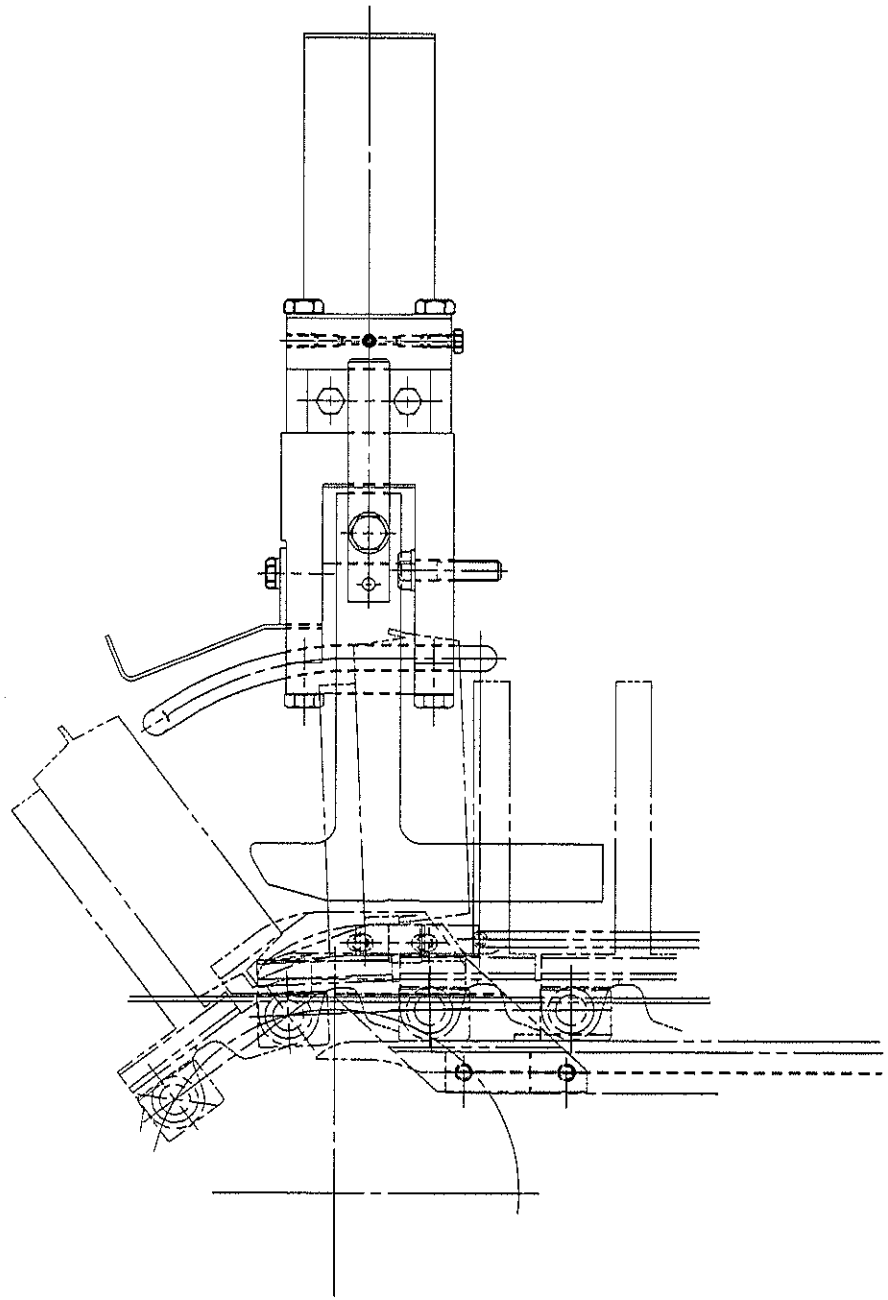

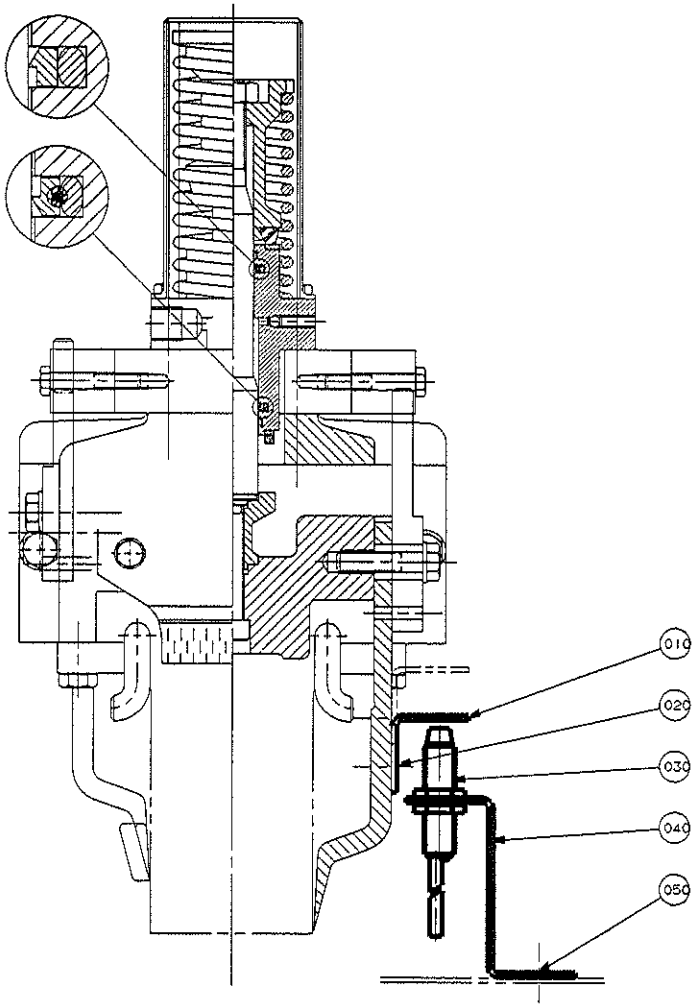

Marked with PART NUMBER

Tetra Pak

NEDDRAGARE
PULL-DOWN DEVICE

SI-978978-1

PRE-RELEASED / DEVELOPMENT STATE

-- INF AM XXXXX XXXXXX XXX

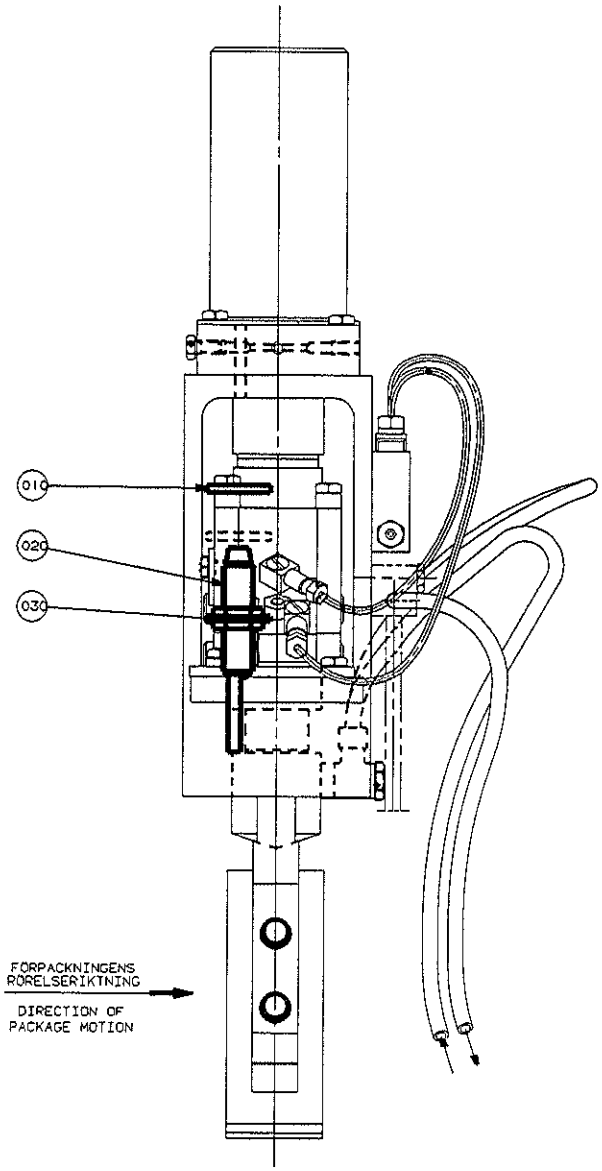

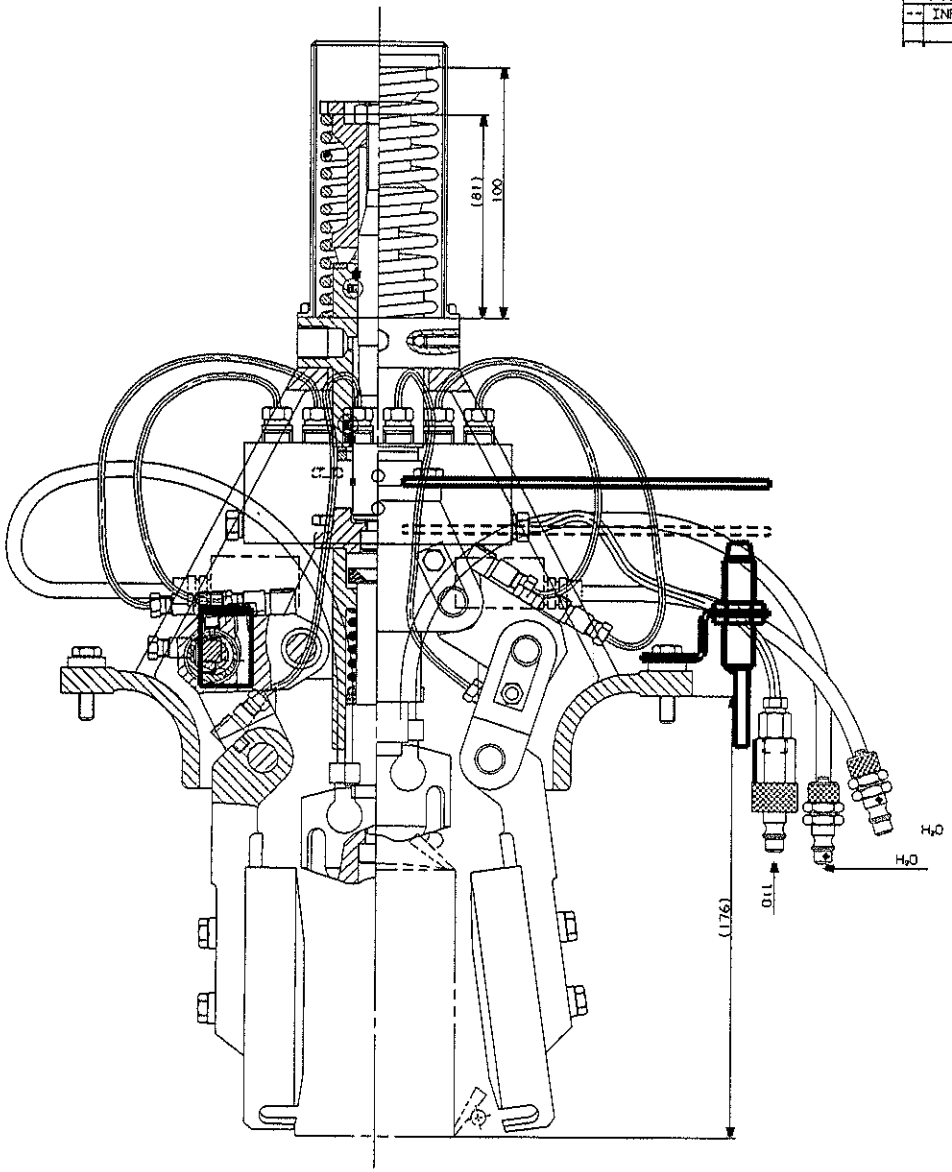

Drawn HHO	Marked with PART NUMBER		
Checked 930526	Method		Assembly drawing
Approved	Material		
Surface roughness			
Surface treatment			
TETRA PAK LUND SWEDEN	TRYCKDON PRESSURE DEVICE	SI-978979-1	

CADAM DRAWING

PRE-RELEASED/DEVELOPMENT STATE

-- INT AN XXXXX 930XXXX XXX

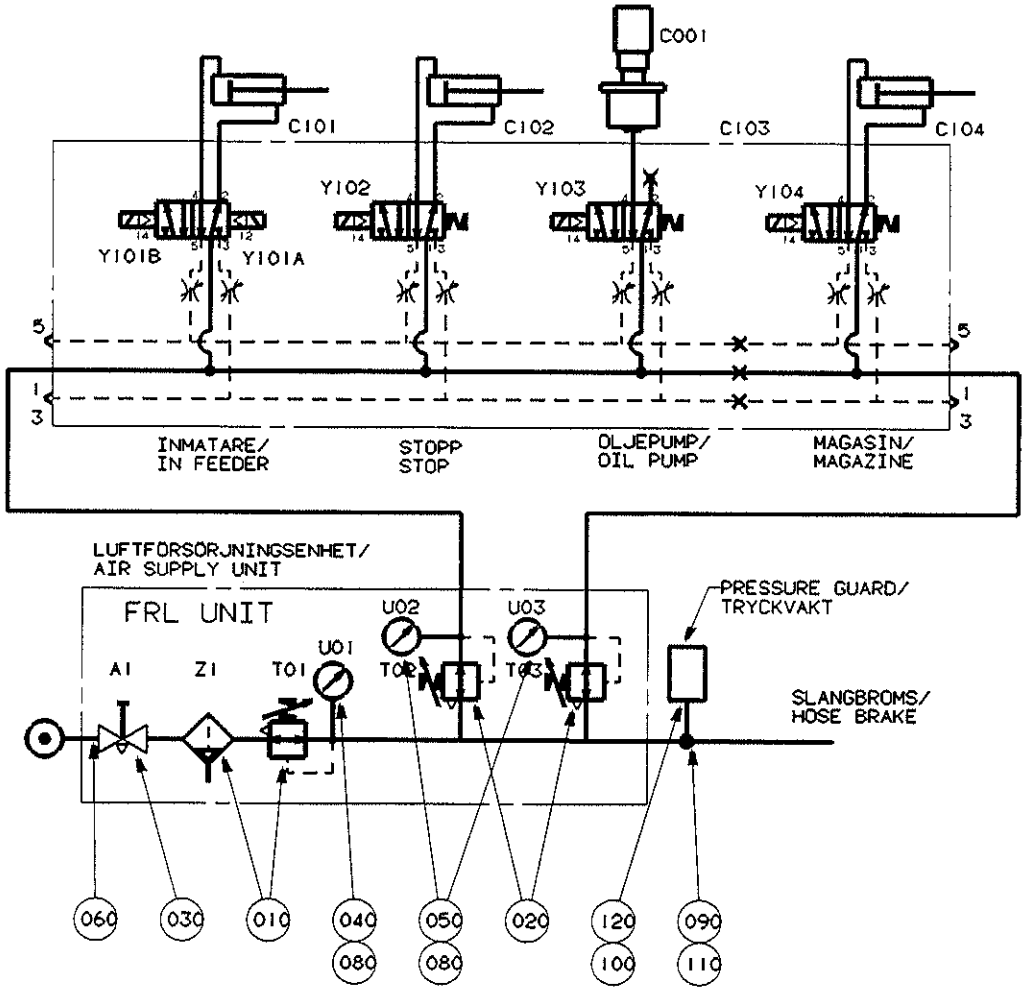

GRUNDINSTÄLLNING
BASIC SETTING

T01	0.55 MPa
T02	0.30 MPa
T03	0.20 MPa

S-978946

Unless otherwise stated SHARP EDGES BROKEN

Tolerance for non-toleranced dimensions

Assembly drawing

Marked with PART NUMBER

Designer FHO

Date 930517

Scale 1:2

Method ...../..... KA 2103.10

Approved

Surface roughness

Surface treatment

Tetra Pak LUND SWEDEN

PNEUM. SCHEMA
PNEUMATIC SCHEDULE

S2-978943-1

PRE-RELEASED/DEVELOPMENT STATE

-- INT AM XXXXX 930XXX XXX

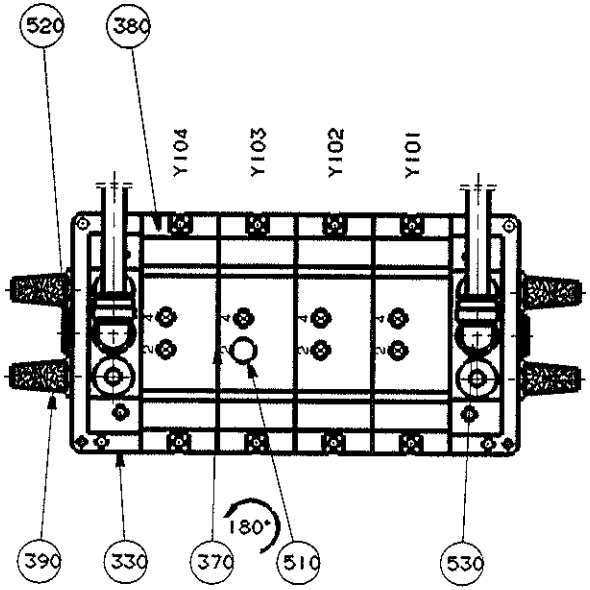

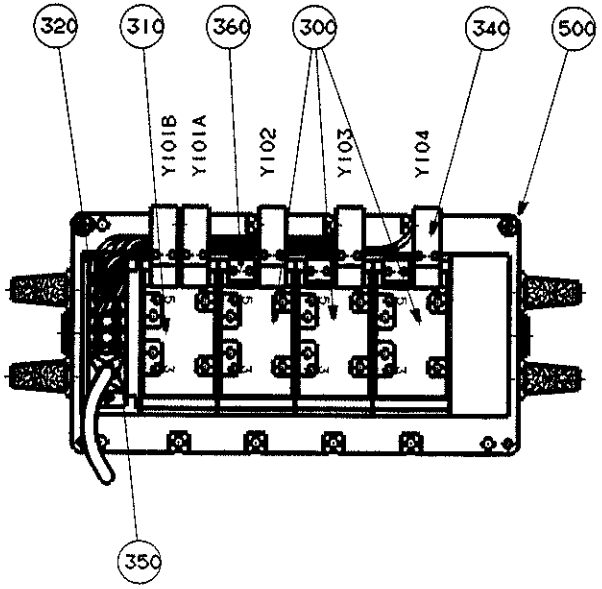

Unless otherwise stated SHARP EDGES BROKEN	Tolerance for non-toleranced dimensions	S-978946 Assembly drawing
Marked with PART NUMBER	Designer HHO	Material
Method ...../..... KA 2103.10	Date 930517 / Scale 1:2 / Approved	Surface roughness / Surface treatment
Tetra Pak LUND SWEDEN	PNEUM. PANEL PNEUMATIC PANEL	S2-978945-1

Gränsmått enligt Tetra Pak Underleverantörsspecifikation (UG).
Other tolerances and requirements according to Tetra Pak Specifications for Sub-Contractors (USL).

PRE-RELEASED/DEVELOPMENT STATE

--	INT AM XXXXX	93XXXX	XXX

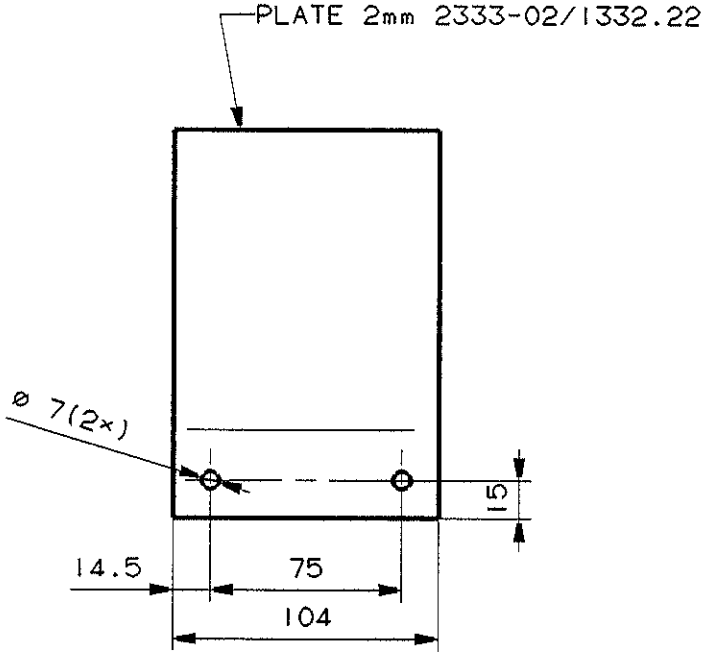

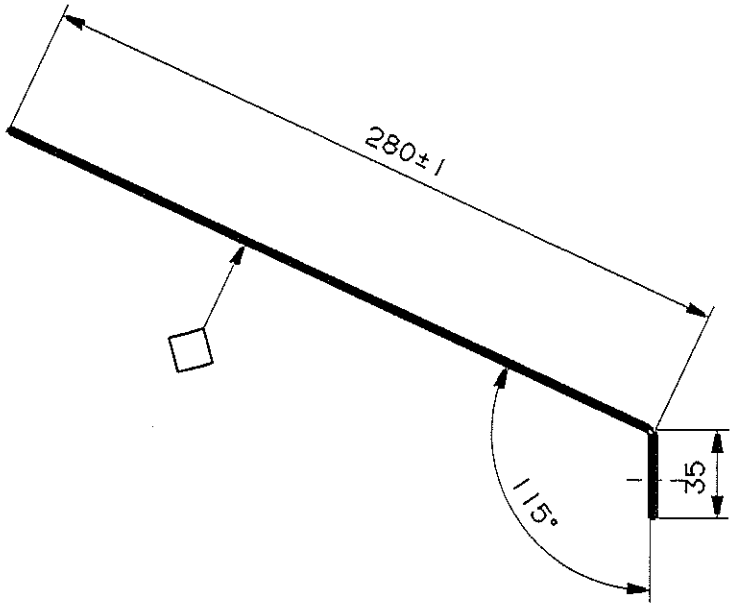

S-978942

Unless otherwise stated SHARP EDGES BROKEN	Tolerance for non-toleranced dimensions ±0.5; ±2°		Assembly drawing
Marked with PART NUMBER	Designer HHO	Material SE OVAN/SEE ABOVE	
Method SST/3 KA 2103.10	Date 930315	Scale 1:2	Surface roughness 6.3
	Approved		Surface treatment YK-0/KA2118.32
Tetra Pak LUND SWEDEN	STYRPLÅT GUIDE PLATE		3-978 920

PRE-RELEASED/DEVELOPMENT STATE

--	INT AM XXXXX	93XXXX	XXX

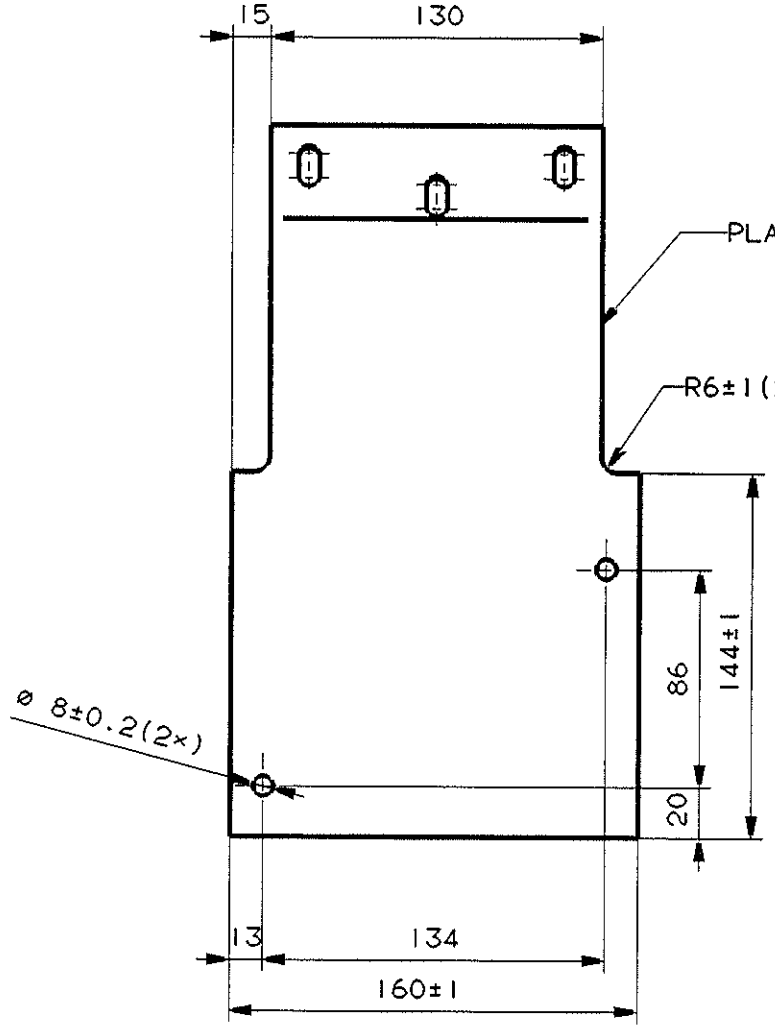

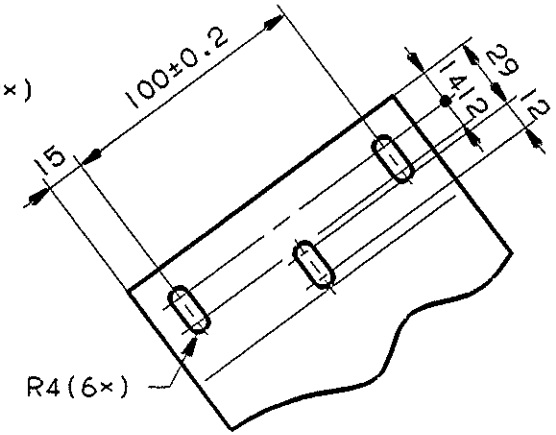

A-A

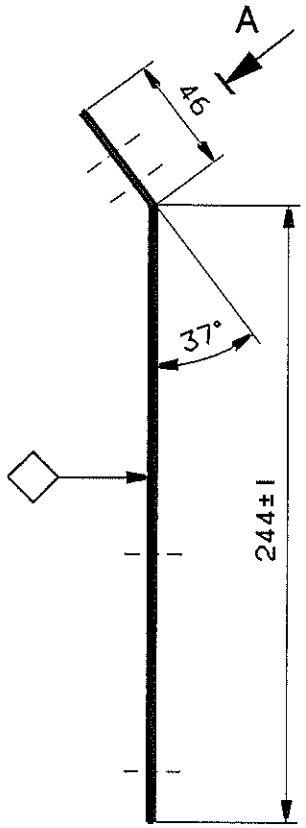

Unless otherwise stated SHARP EDGES BROKEN	Tolerance for non-toleranced dimensions ±0.5; ±2°		S-978944 Assembly drawing
Marked with PART NUMBER	Designer HHO	Material SE OVAN/SEE ABOVE	
Method SST/3 XA 2103.10	Date 930314	Scale 1:2	Surface roughness 6.3
	Approved		Surface treatment YK-0/KA2118.32
Tetra Pak LUND SWEDEN	FÄSTE BRACKET		3-978 921

PRE-RELEASED/DEVELOPMENT STATE

-- INT AM XXXXXX 930000 XXX

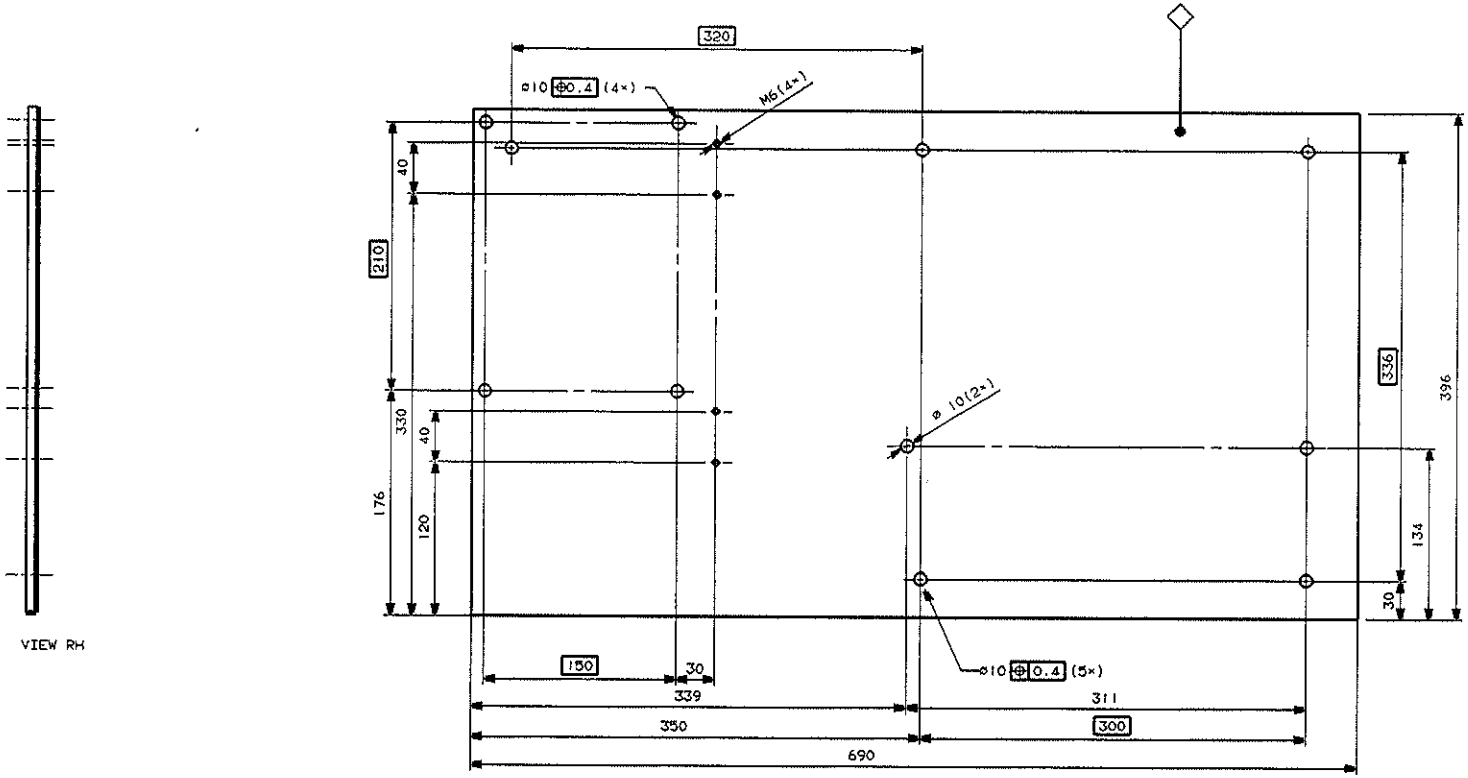

Marked with PART NUMBER	Tolerances for non toleranced dimensions ±0.5		S-978944
	FHO	ALUMINIUM 4212-06/M1142.12	
	930518	1:2	NO SURFACE TREATMENT
Tetra Pak	PLAT PLATE		1-978 922

PRE-RELEASED/DEVELOPMENT STATE

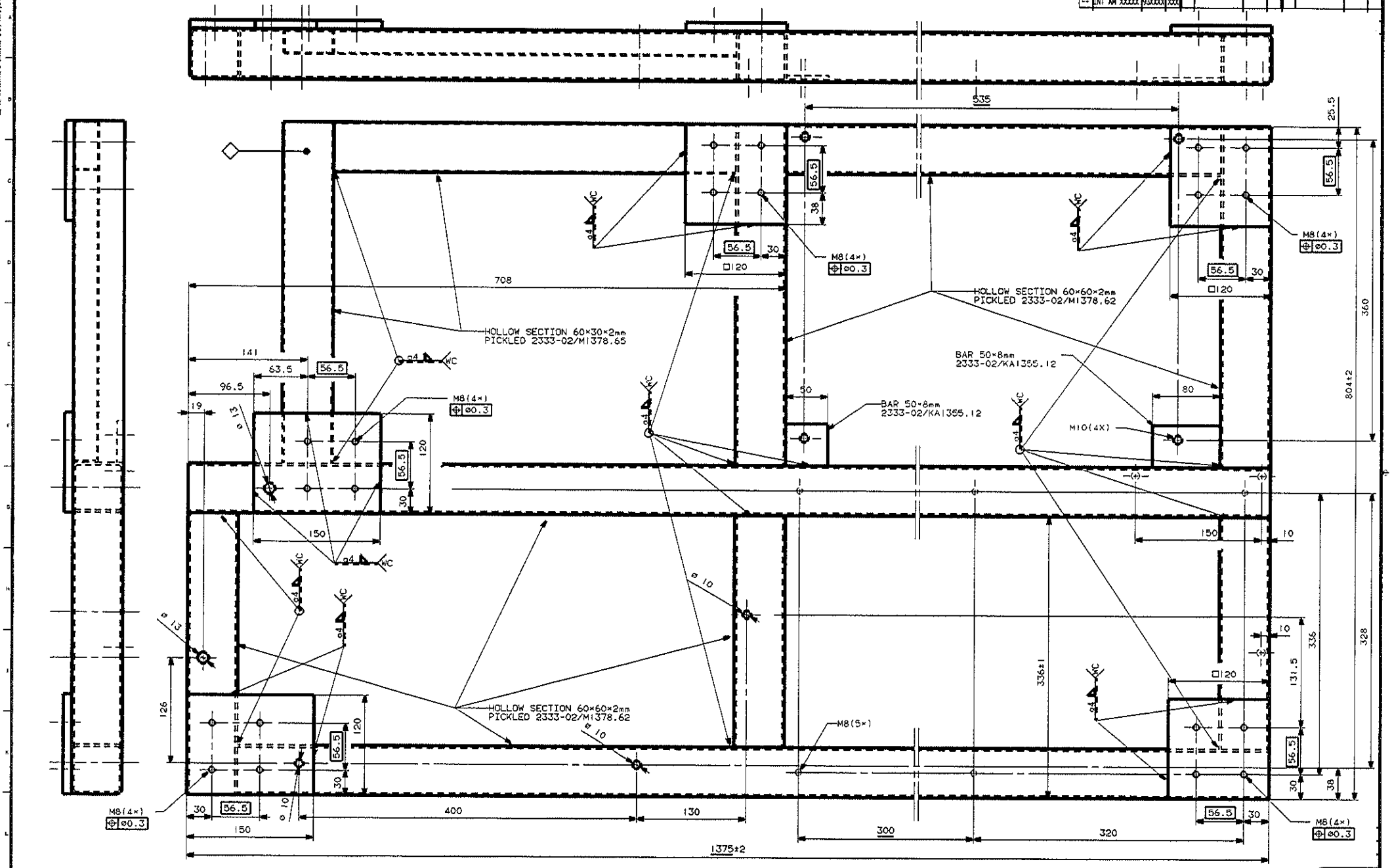

Marked with PART NUMBER	±0.5	S-978944
	HO	2333-02
	930422	1:2
		YK-0/KA2118.32
Tetra Pak	STATIV FRAME	1-978 923

PRE-RELEASED/DEVELOPMENT STATE

--	INT AM XXXXX	93XXXX	XXX

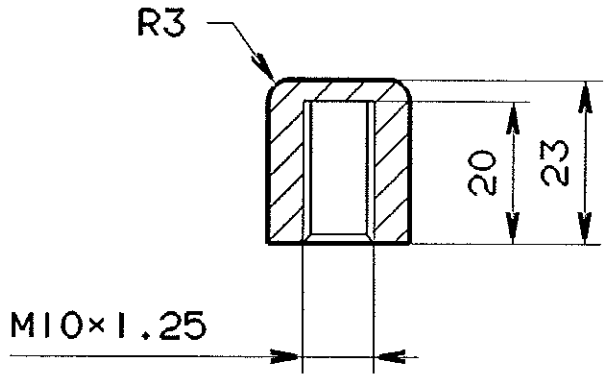

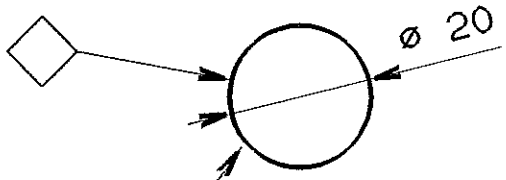

RUNDSTÅNG ø20mm
PA23112-05/M1622.16

S-978942

Assembly drawing

Unless otherwise stated SHARP EDGES BROKEN

Tolerance for non-toleranced dimensions ±0.5

Marked with PART NUMBER

Method VA/3 KA 2103.10

Designer HHO

Date 930428

Approved

Material SE OVAN/SEE ABOVE

Scale 1:1

Surface roughness 3.2

Surface treatment

Tetra Pak LUND SWEDEN

HUV
HUBE

4-978 924

PRE-RELEASED/DEVELOPMENT STATE

--	INT AM XXXXX	93XXXX	XXX

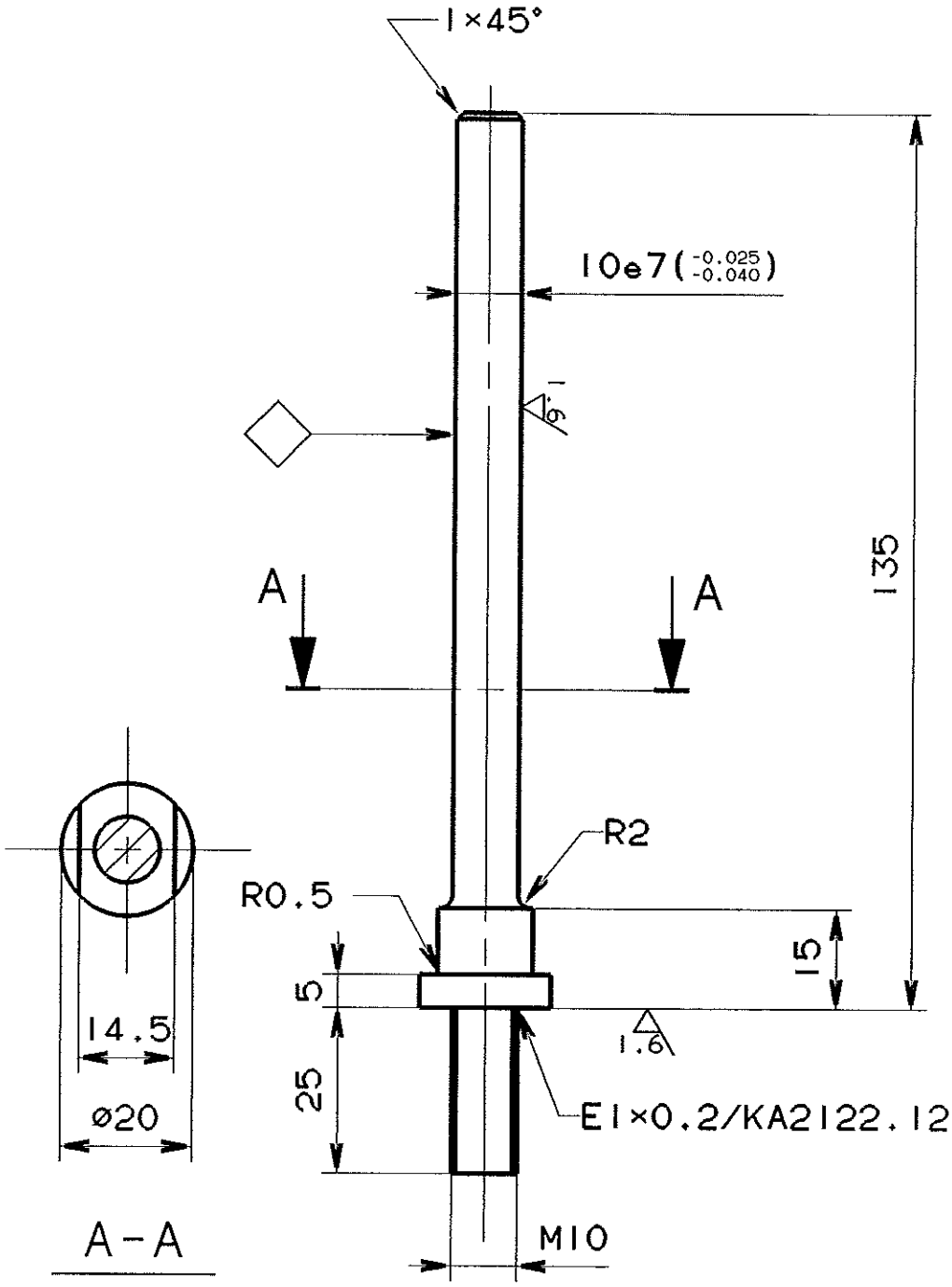

S-978942

Unless otherwise stated SHARP EDGES BROKEN	Tolerance for non-toleranced dimensions ±0.5; ±2°		Assembly drawing
Marked with PART NUMBER	Designer HHO	Material 2333-02	
Method ETS/3 KA 2103.10	Date 930517	Scale 1:1	Surface roughness 3.2 (1.6)
	Approved		Surface treatment YK-0/KA2118.32
Tetra Pak LUND SWEDEN	AXEL AXLE		4-978 925

PRE-RELEASED/DEVELOPMENT STATE

--	INT AM XXXXX	93XXXX	XXX

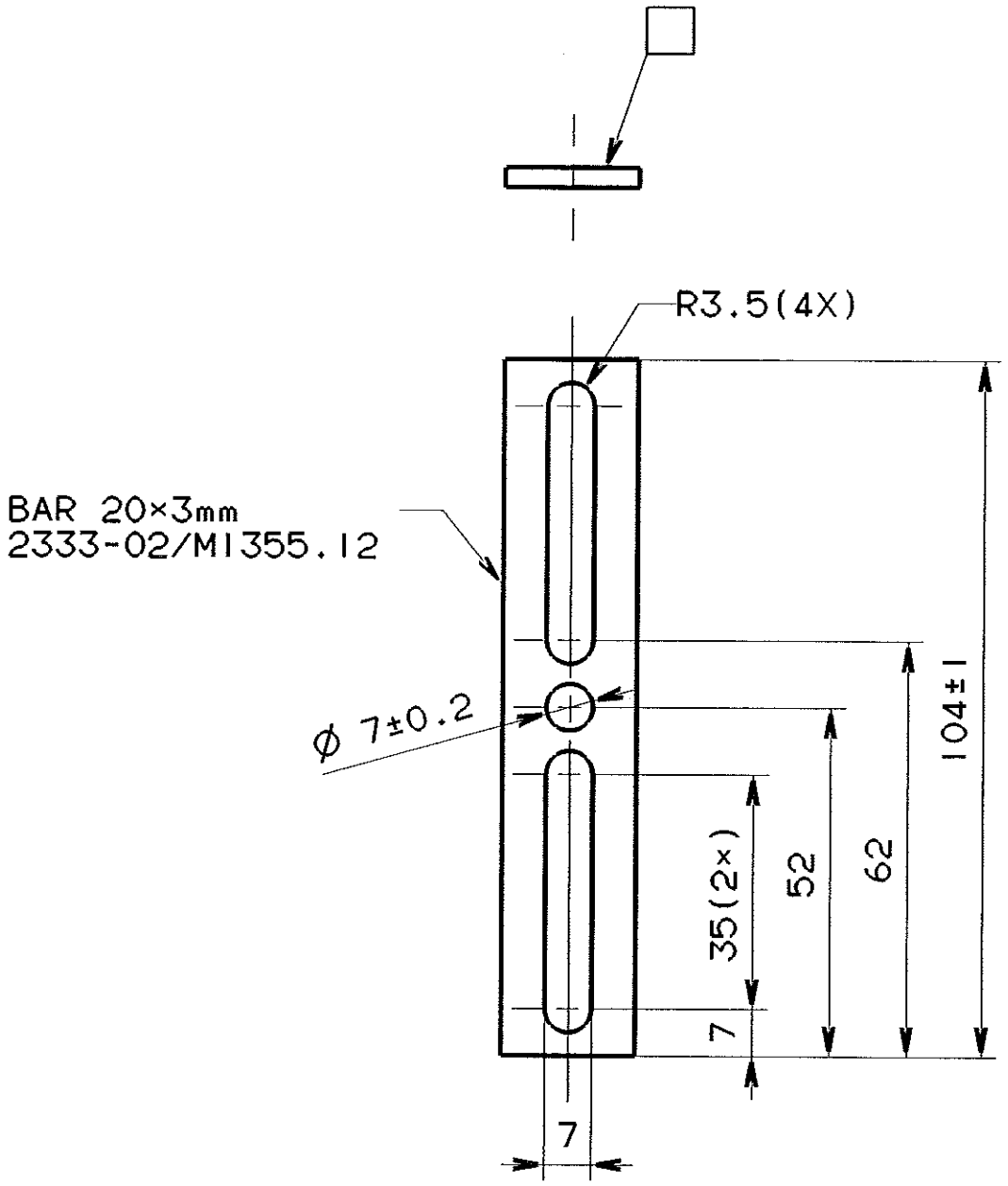

S-978942

Assembly drawing

Unless otherwise stated SHARP EDGES BROKEN	Tolerance for non-toleranced dimensions ±0.5		
Marked with PART NUMBER	Designer HHO	Material SEE ABOVE/SE OVAN	
Method ETS/3 KA 2103.10	Date 930505	Scale 1 : 1	Surface roughness 6.3
	Approved		Surface treatment YK-0/KA2118.32
Tetra Pak LUND SWEDEN	BRICKA WASHER		4-978 926

PRE-RELEASED/DEVELOPMENT STATE

--	INT AM XXXXX	93XXXX	XXX

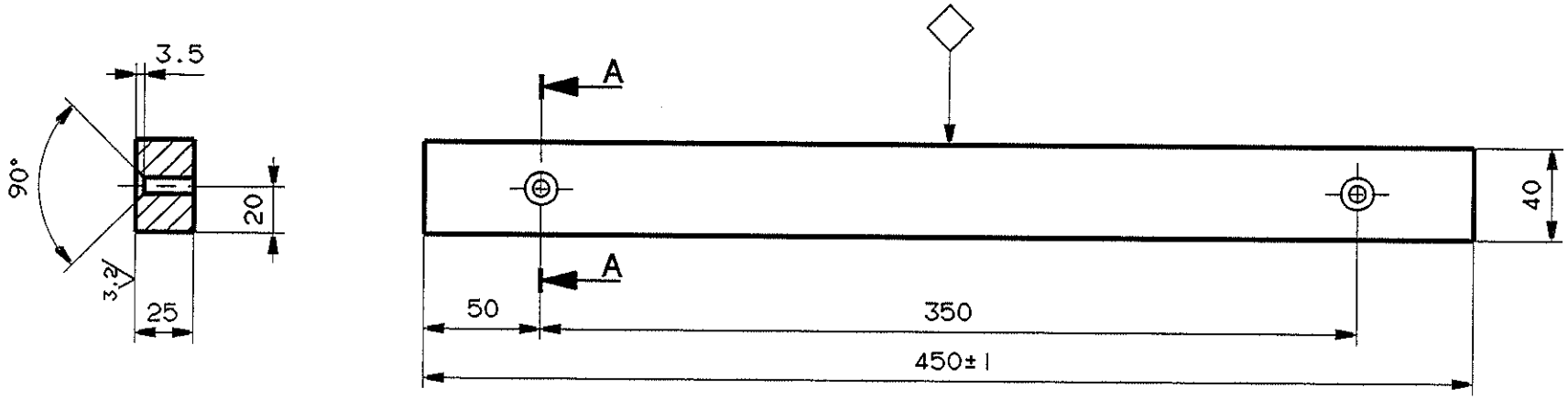

Övriga toleranser och fordringar enligt Tetra Paks Underleverantörsspecifikationer (US).
Other tolerances and requirements according to Tetra Paks Specifications for Sub-Contractors (US).

Unless otherwise stated SHARP EDGES BROKEN	Tolerance for non-toleranced dimensions ±0.5; ±2°		S-978942 Assembly drawing
Marked with PART NUMBER	Designer HHO	Material PLAST POM 24112-05	
Method VA/3 KA 2103.10	Date 930518	Scale 1:2	Surface roughness 6.3 (3.2)
	Approved		Surface treatment
Tetra Pak LUND SWEDEN	SKENA RAIL		3-978 927

PRE-RELEASED/DEVELOPMENT STATE

--	INT AM XXXXX	93XXXX	XXX

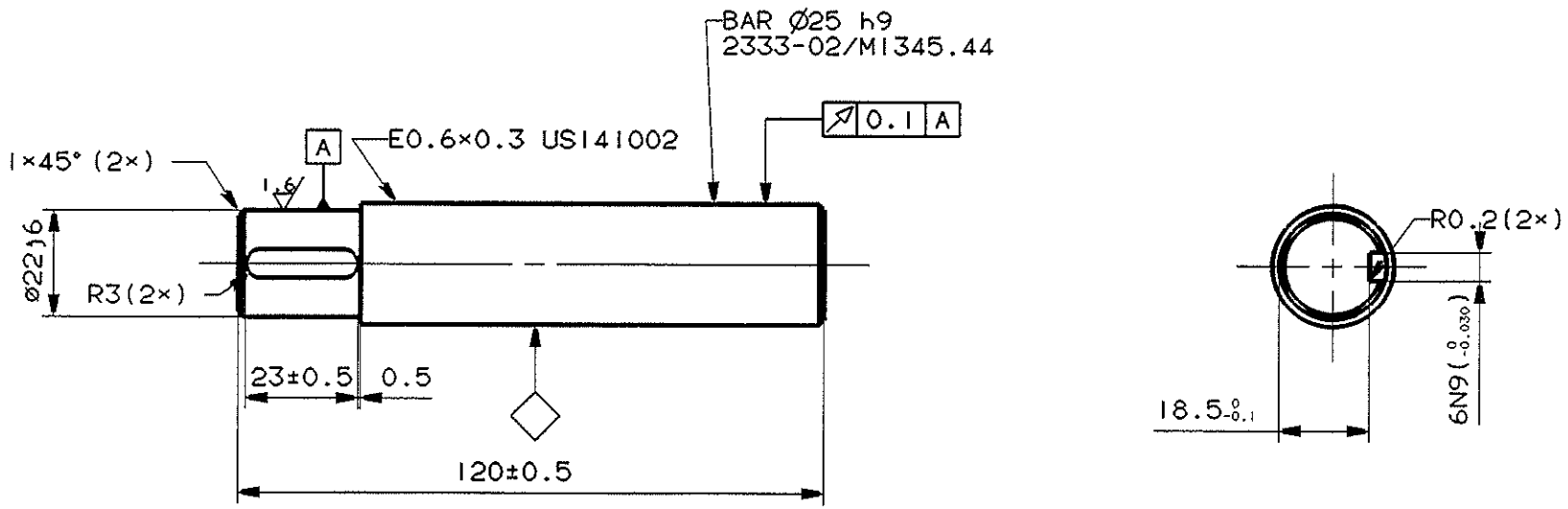

KIL: 312701-233

Unless otherwise stated SHARP EDGES BROKEN	Tolerance for non-toleranced dimensions ±0.3, ±2°		S-978944 Assembly drawing
Marked with PART NUMBER	Designer HHO	Material SE OVAN/SEE ABOVE	
Method ETS/3 KA 2103.10	Date 930406	Scale 1:1	Surface roughness 2 (1.6)
	Approved		Surface treatment YK-0/KA2118.32
Tetra Pak LUND SWEDEN	AXEL SHAFT		3-978 928

PRE-RELEASED/DEVELOPMENT STATE

--	INT AM XXXXX	93XXXX	XXX

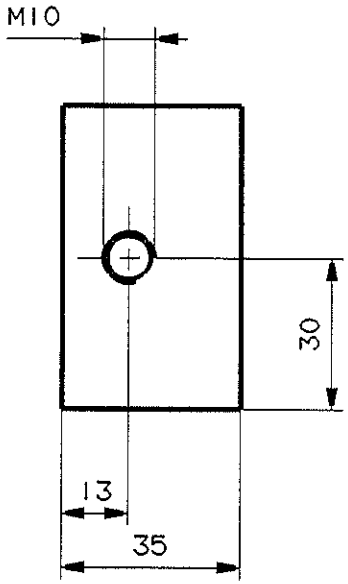

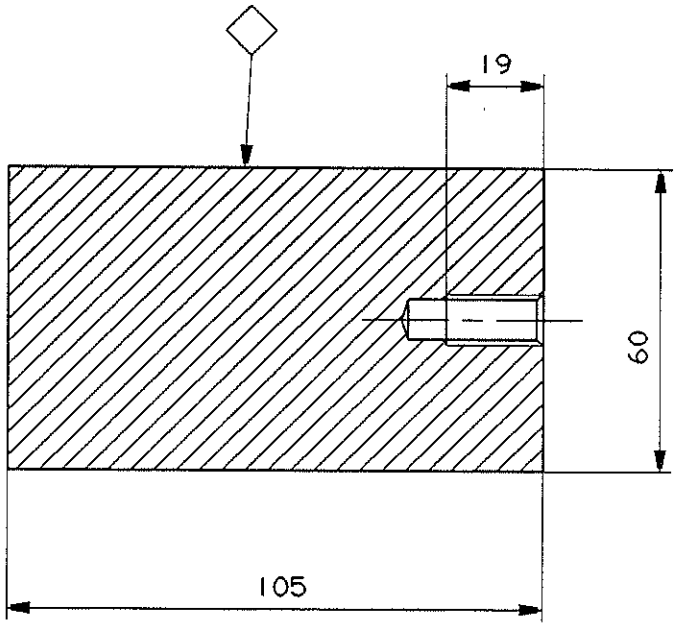

Övriga toleranser och fordringar enligt Tetra Paks Underleverantörsspecifikationer (US).
Other tolerances and requirements according to Tetra Paks Specifications for Sub-Contractors (US).

Unless otherwise stated SHARP EDGES BROKEN	Tolerance for non-toleranced dimensions ±0.5	S-978942 Assembly drawing
Marked with PART NUMBER	Designer HHO / Material ALUMINIUM 4212-06	
Method SST.3 KA 2103.10	Date 930518 / Scale 1 : 1 / Surface roughness 3.2	
	Approved / Surface treatment	
Tetra Pak LUND SWEDEN	STAV BAR	3-978 929

PRE-RELEASED/DEVELOPMENT STATE

--	INT AM XXXXX	93XXXX	XXX

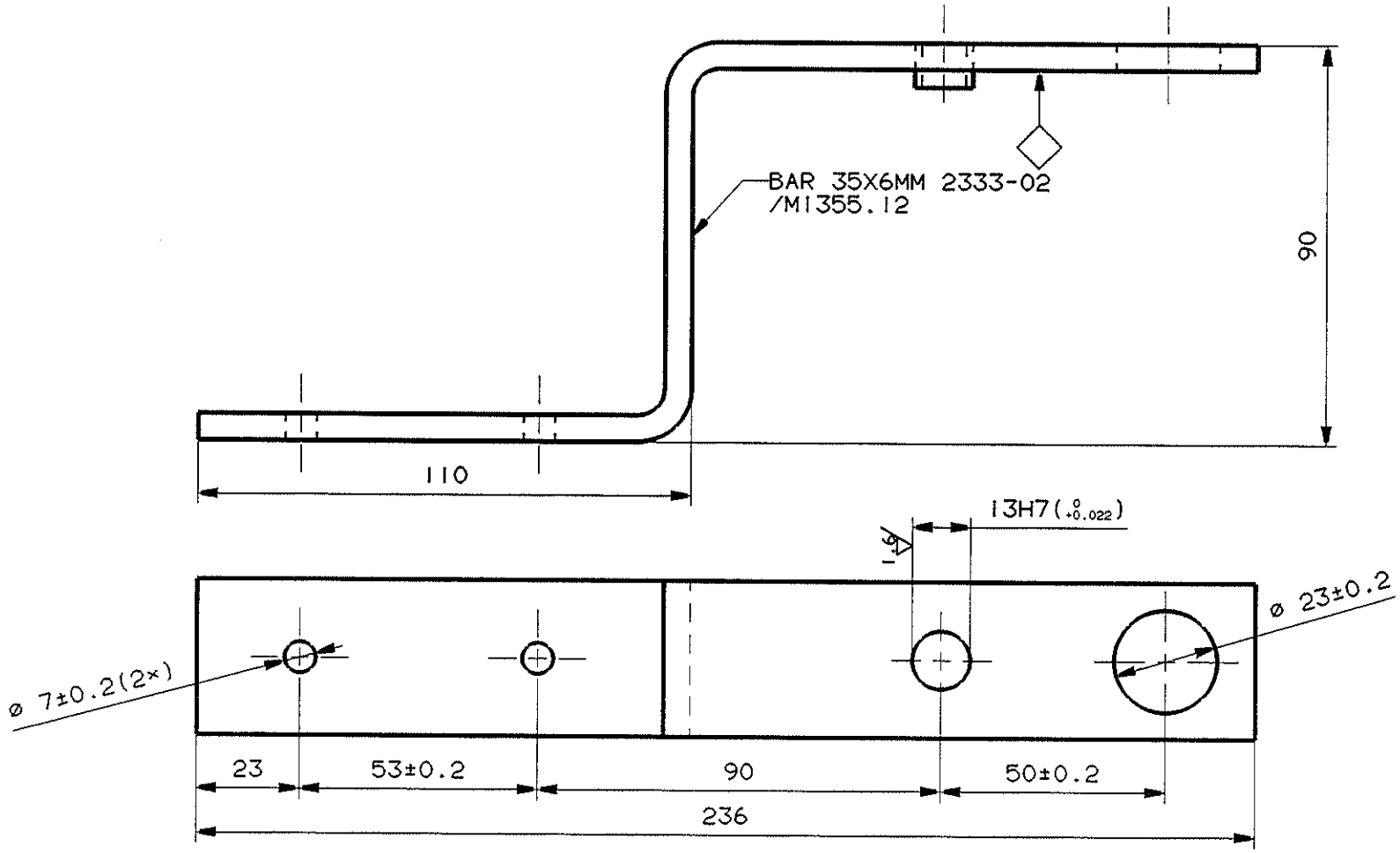

Övriga toleranser och fordringar enligt Tetra Paks Underleverantörsspecifikationer (US).
Other tolerances and requirements according to Tetra Paks Specifications for Sub-Contractors (US).

Unless otherwise stated SHARP EDGES BROKEN	Tolerance for non-toleranced dimensions ±0.5 ; ±2°		S-978942 Assembly drawing
Marked with PART NUMBER	Designer HHO	Material SE OVAN/SEE ABOVE	
Method SST/3 KA 2103.10	Date 930515	Scale 1 : 1	Surface roughness 6.3 (1.6)
	Approved		Surface treatment YK-0/KA2118.32
Tetra Pak LUND SWEDEN	BRACKET FÄSTE		3-978 930

PRE-RELEASED/DEVELOPMENT STATE

-- INT AM XXXXX 93XXXX XXX

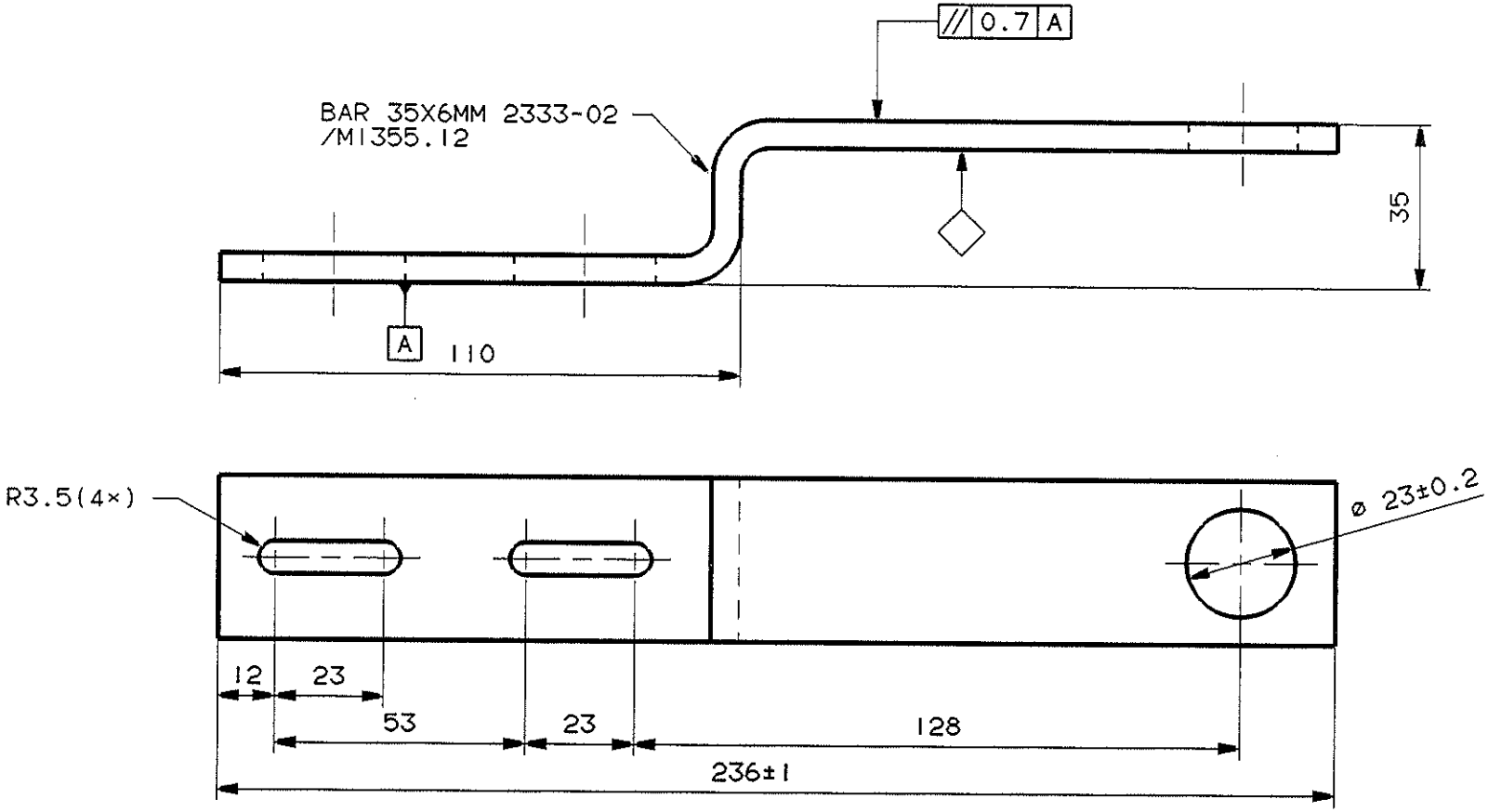

S-978942

Assembly drawing

Unless otherwise stated SHARP EDGES BROKEN	Tolerance for non-toleranced dimensions ±0.5; ±2°	
Marked with PART NUMBER	Designer HHO	Material SE OVAN/SEE ABOVE
Method SST.3 KA 2103.10	Date 930515	Scale 1:1
	Approved	Surface roughness 6.3
		Surface treatment YK-0/KA2118.32
Tetra Pak LUND SWEDEN	BRACKET FÄSTE	3-978 931

Övriga toleranser och fordringar enligt Tetra Paks Underleverantörsspecifikationer (US).
Other tolerances and requirements according to Tetra Paks Specifications for Sub-Contractors (US).

0 10 20 30 40 50 60 70 80 90 100mm

PRE-RELEASED/DEVELOPMENT STATE

-- INT AM XXXXX 930XXX XXX

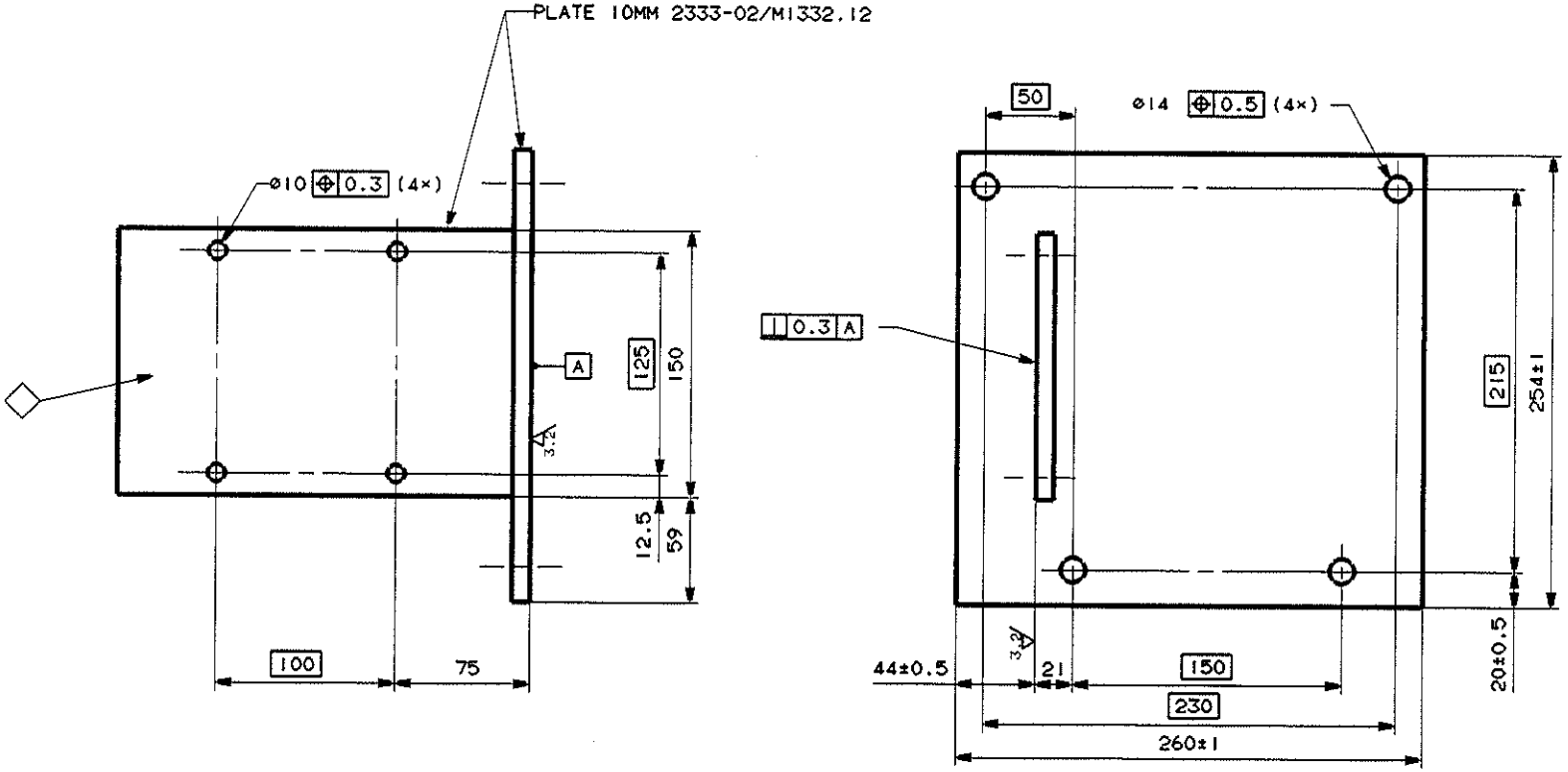

Unless otherwise stated SHARP EDGES BROKEN	Tolerance for non-toleranced dimensions ±0.2		S-978944 Assembly drawing
Marked with PART NUMBER Method SST/.3 KA 2103.10	Designer HHO	Material 2333-02	
	Date 930503	Scale 1:2	Surface roughness (3.2) 6.3
	Approved		Surface treatment YK-0/KA2118.32
Tetra Pak LUND SWEDEN	FÄSTE BRACKET		2-978 932

Denna ritning får inte utan Tetra Paks uttryckliga tillstånd vare sig utlånas till eller delgivas tredje man.

This drawing may not without the consent of Tetra Pak be copied, transmitted or disclosed to any third party.

Design tolerances och fordringar enligt Tetra Paks Underleverantörsspecifikationer (US).

Other tolerances and requirements according to Tetra Paks Specifications for Sub-Contractors (US).

PRE-RELEASED/DEVELOPMENT STATE

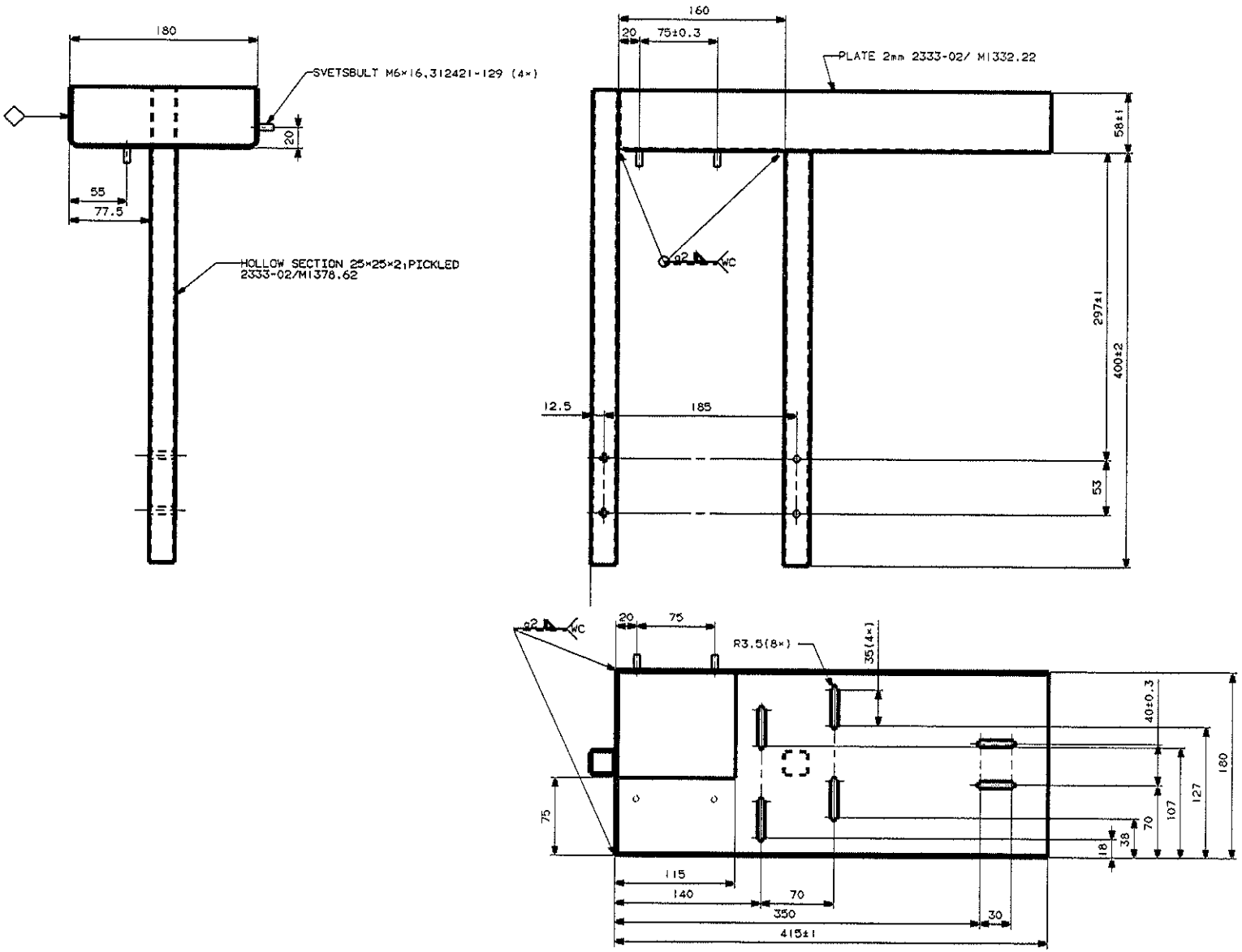

S-978942

Unless dimensions stated PRESS TOOL BRANCH

Marked with PART NUMBER

Material SS1.3 MAGNUM

Tolerances for non toleranced dimensions ±0.5

Scale 1:2

Material EHO

Weight 30425

Part number 2333-02

Surface roughness

Surface treatment YK-0/KA2118.32

Tetra Pak

MAGASINHÅLLARE
MAGAZINE HOLDER

1-978 933

PRE-RELEASED/DEVELOPMENT STATE

-- INT AM XXXXX 930000 XXX

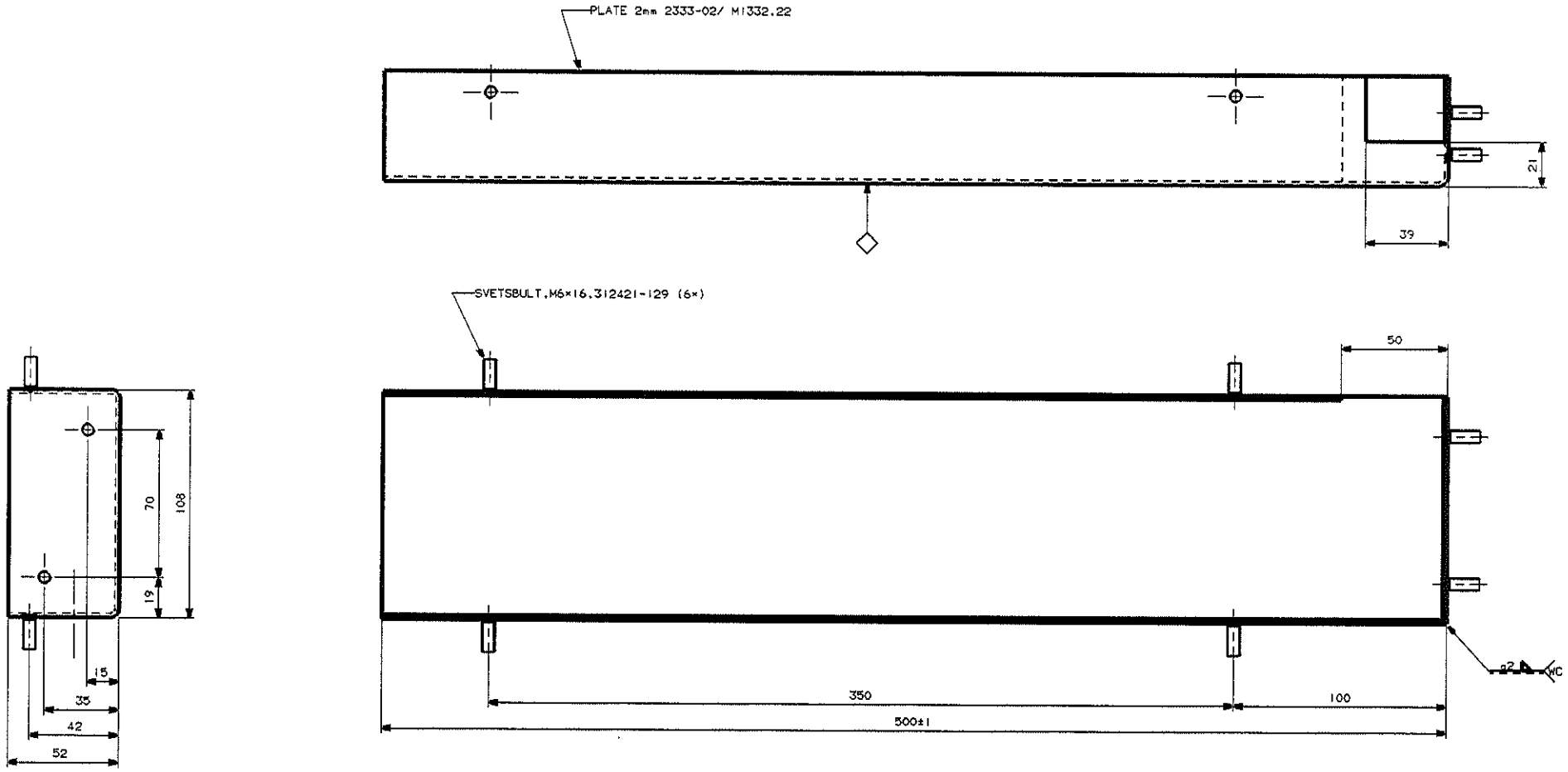

Unless otherwise stated SHAPE FORCE DEBURR	Tolerances for non dimensional dimensions ±0.5	S-978942 Assembly drawing
Marked with PART NUMBER	Drawn BHO	Material 2333-02
Material SST,3	Date 930425	Surface roughness ✓
		Surface treatment YK-0/KA2118.32
Tetra Pak LUND SWEDEN	RÅNNA CHUTE	1-978 934

PRE-RELEASED/DEVELOPMENT STATE

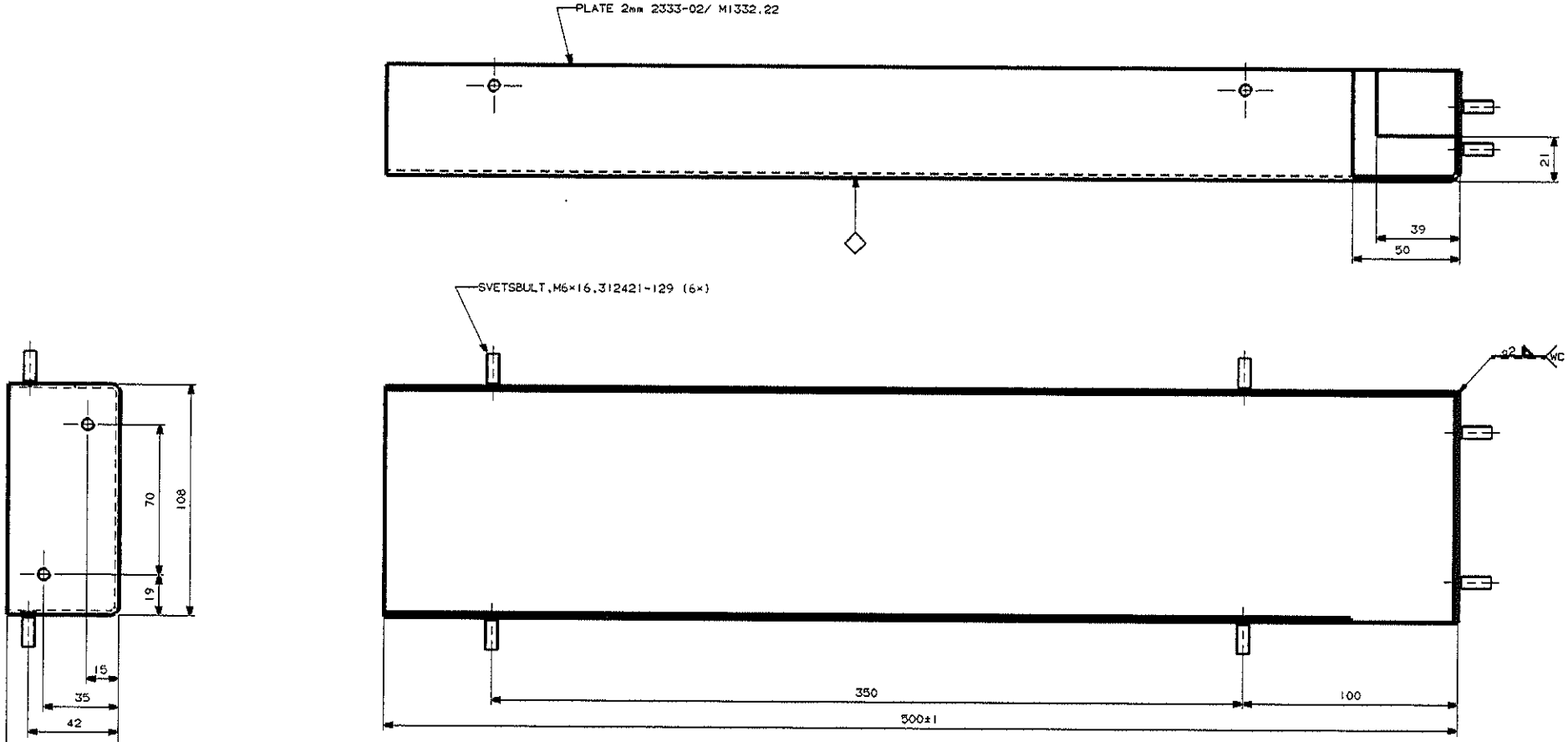

Unless otherwise stated CHAMF EDGES REMOVE	Tolerances of form and Referenced dimensions ±0.5	S-978942 Assembly drawing
Marked with PART NUMBER	Drawn EHO	2333-02
Material SS1.3	Date 930425	Scale 1:1
	Approved	Surface treatment ✓
		Material YK-0/KA2118.32
Tetra Pak LUND SWEDEN	RANNA CHUTE	1-978 935

PRE-RELEASED/DEVELOPMENT STATE

--	INT AM XXXXX	93XXXX	XXX

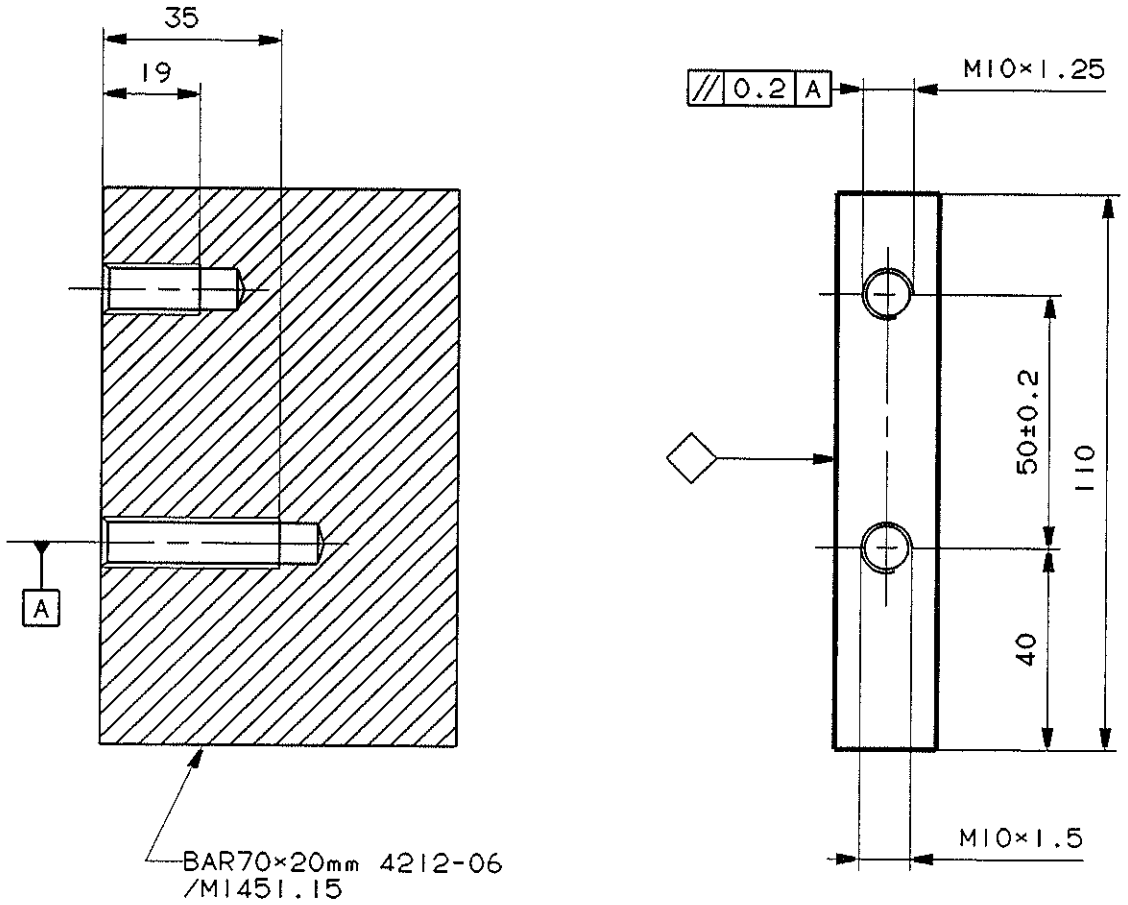

Ovriga toleranser och fordringar enligt Tetra Paks Underleverantörsspecifikationer (US).
Other tolerances and requirements according to Tetra Paks Specifications for Sub-Contractors (US).

Unless otherwise stated SHARP EDGES BROKEN	Tolerance for non-toleranced dimensions ±0.5		S-978942 Assembly drawing
Marked with PART NUMBER	Designer HHO	Material SE OVAN/SEE ABOVE	
Method SST/3 KA 2103.10	Date 930515	Scale 1:1	Surface roughness 6.3
	Approved		Surface treatment NO SURFACE TREATMENT
Tetra Pak LUND SWEDEN	STOPP STOP		3-978 936

PRE-RELEASED/DEVELOPMENT STATE

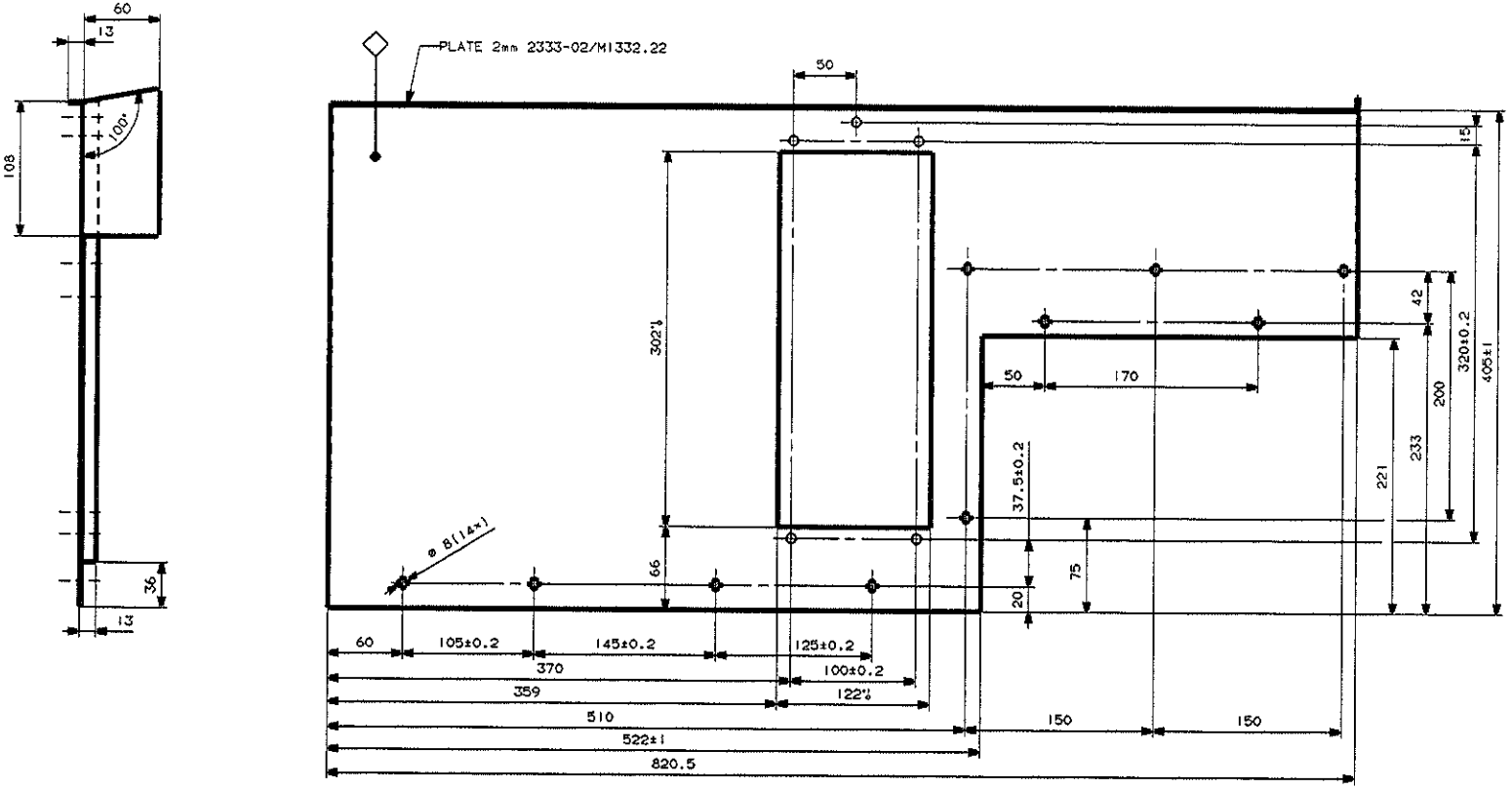

Marked with PART NUMBER	±0.5	S-978944
SST.3	AHO	SE OVAN/SEE ABOVE
93051.0	1:2	
Tetra Pak	SKYDD GUARD	1-978 937

PRE-RELEASED/DEVELOPMENT STATE

-- INT AM XXXXX 93XXXX XXX

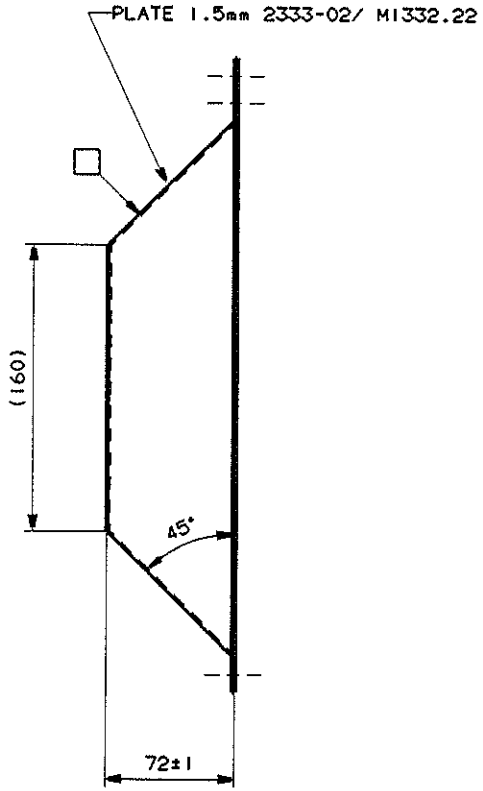

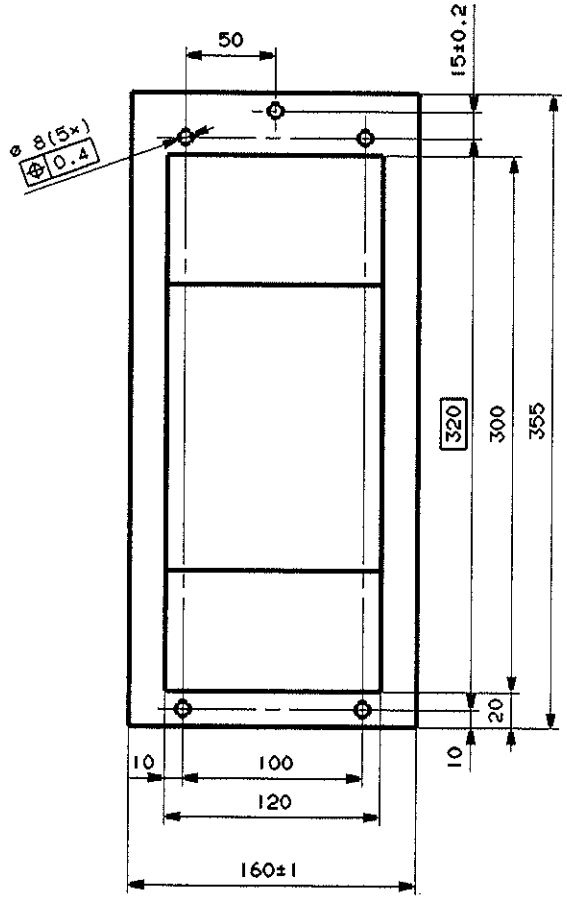

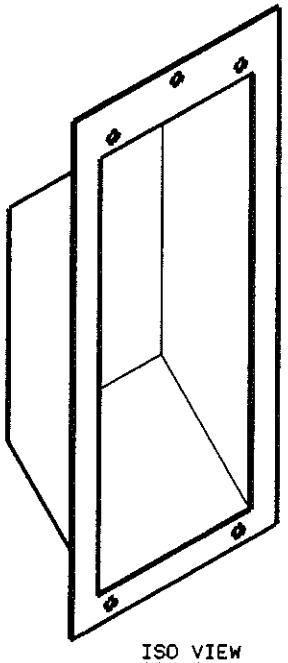

ISO VIEW
SCALE 1:2

GENERELL SVETS:/
GENERAL WELDING:

WC

Unless otherwise stated SHARP EDGES BROKEN	Tolerance for non-tolerenced dimensions ±0.5; ±2°		S-978944 Assembly drawing
Marked with PART NUMBER SST/3 XA 2107.10	Designer HHO	Material 2333-02	
	Date 930513	Scale 1:2	Surface roughness 6.3
	Approved		Surface treatment YK-0 / KA 2118.32
Tetra Pak LUND SWEDEN	SKYDDSKÅPA PROTECTION COVER		2-978 938

Design tillverkar och fordringar enligt Tetra Pak's U-Jer-tavrotts-vägnäl/tullmar (US).

Other tolerances and requirements according to Tetra Pak Specifications for Sub-Contractors (US).

PRE-RELEASED/DEVELOPMENT STATE

--	INT AM XXXXX	93XXXX	XXX

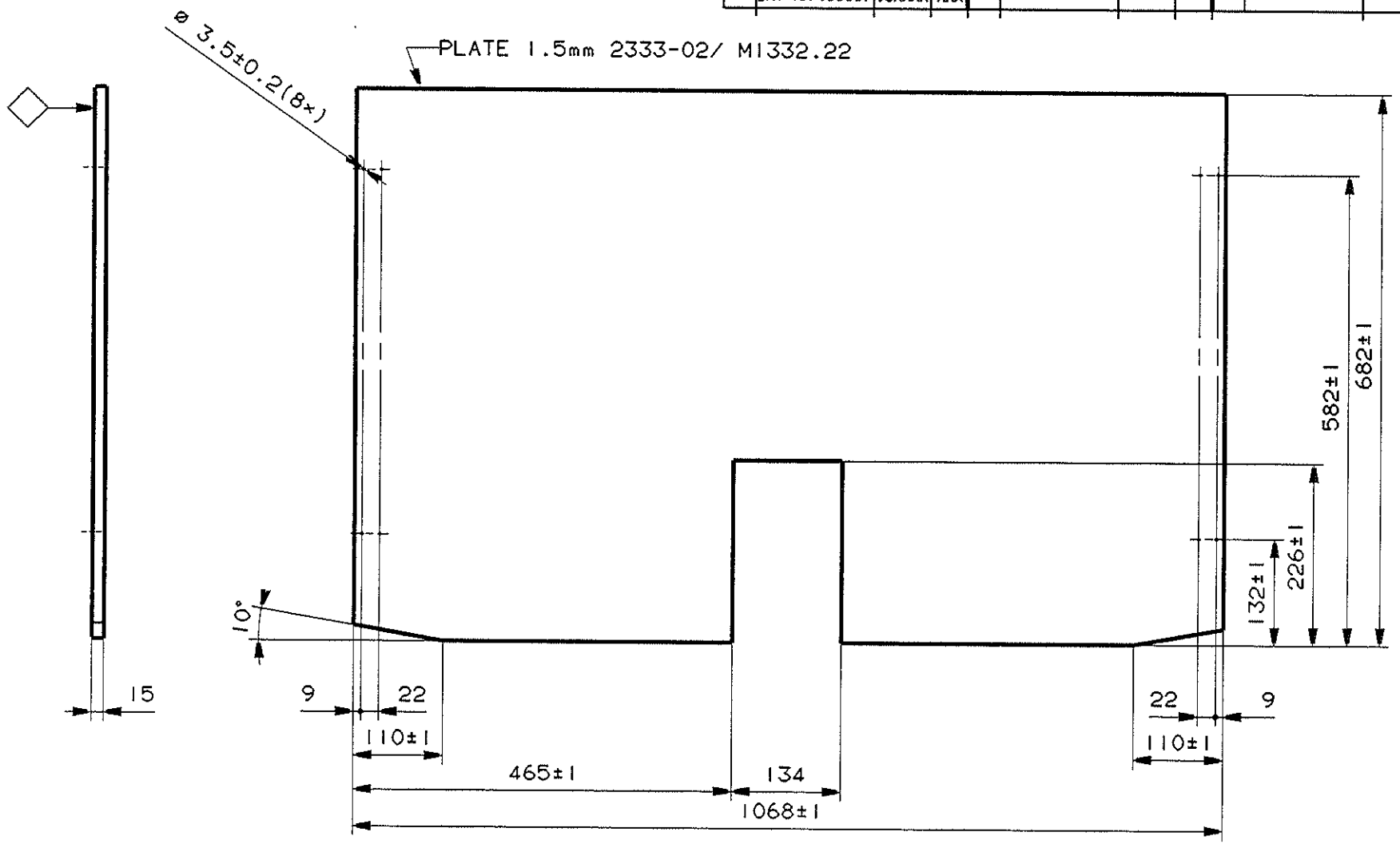

Unless otherwise stated SHARP EDGES BROKEN	Tolerance for non-toleranced dimensions ±0.5; ±2°		S-978944 Assembly drawing
Marked with PART NUMBER	Designer HHO	Material SE OVAN/SEE ABOVE	
Method SST/3 KA 2103.10	Date 930511	Scale 1:5	Surface roughness
	Approved		Surface treatment SURF
Tetra Pak LUND SWEDEN	SKYDD GUARD		3-978 939

Övriga toleranser och fordringar enligt Tetra Paks Underleverantörsspecifikationer (US).
Other tolerances and requirements according to Tetra Paks Specifications for Sub-Contractors (US).

PRE-RELEASED/DEVELOPMENT STATE

-- INT AM XXXXX 93XXXX XXX

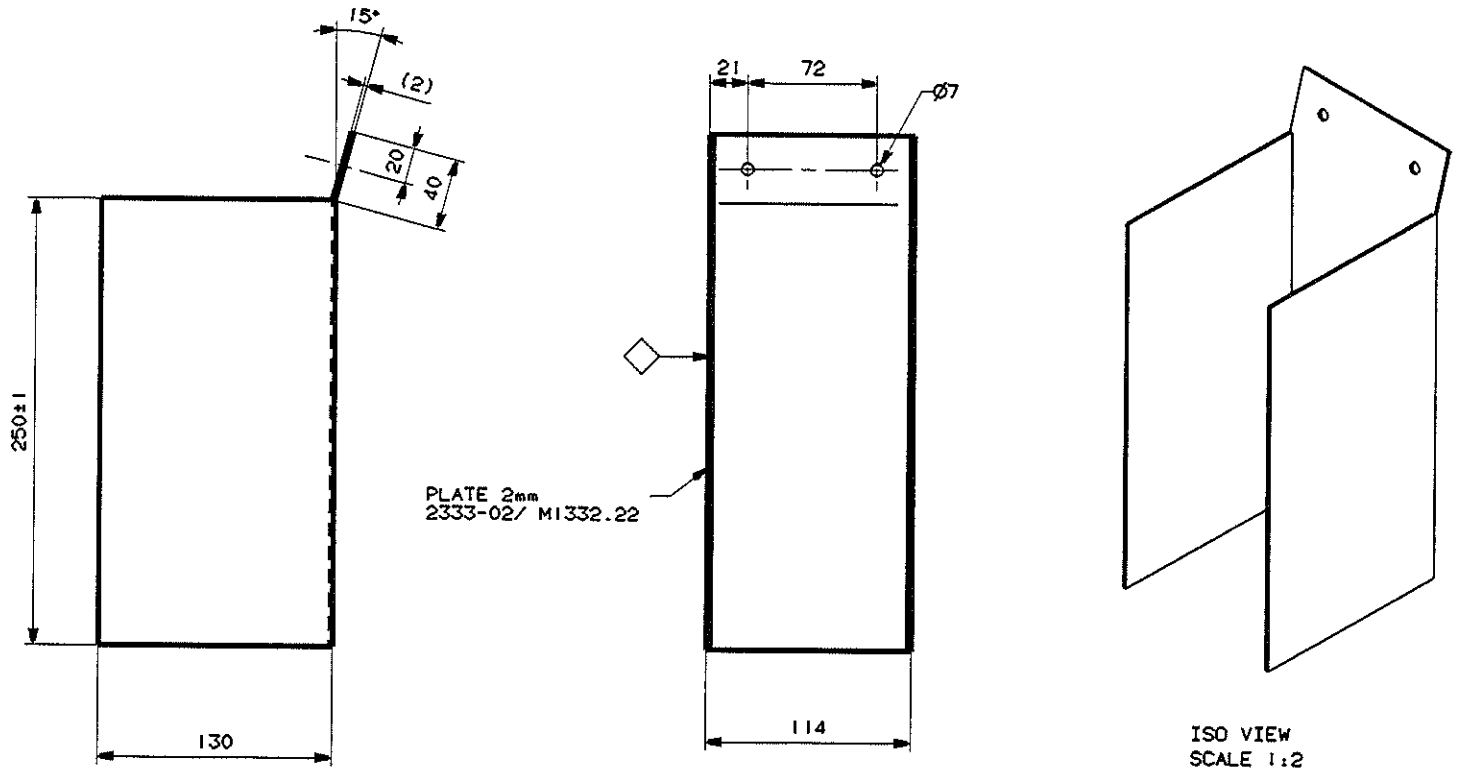

Unless otherwise stated SHARP EDGES BROKEN	Tolerance for non-toleranced dimensions ±0.5; ±2°		S-978942 Assembly drawing
Marked with PART NUMBER	Designer HHO	Material SE OVAN/SEE ABOVE	
	Date 930505	Scale 1:1	Surface roughness 6.3
Method SST/3 KA 2103.10	Approved		Surface treatment YK-0/KA2118.32
Tetra Pak LUND SWEDEN	RÄNNA DUCKT		2-978 940

Design tolerances such for design origin Tetra Pak Under-leverantörspecifikation (US).

Other tolerances and requirements according to Tetra Pak Specification for Sub-Contractors (US).

PRE-RELEASED/DEVELOPMENT STATE

--	INT AM XXXXX	93XXXX	XXX

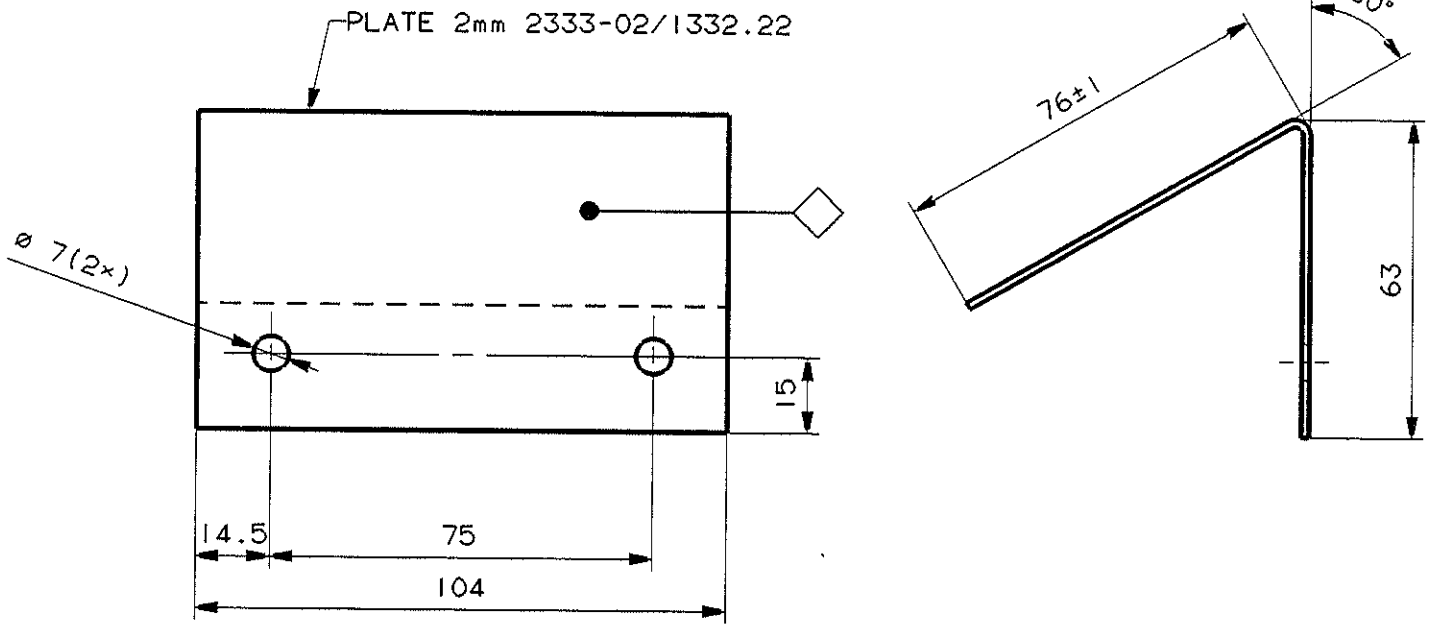

Övriga toleranser och fordringar enligt Tetra Paks Underleverantörsspecifikationer (US).
Other tolerances and requirements according to Tetra Paks Specifications for Sub-Contractors (US).

Unless otherwise stated SHARP EDGES BROKEN	Tolerance for non-toleranced dimensions ±0.5; ±2°		S-978942 Assembly drawing
Marked with PART NUMBER	Designer HHO	Material SE OVAN/SEE ABOVE	
Method SST/3 KA 2103.10	Date 930524	Scale 1:1	Surface roughness 6.3
	Approved		Surface treatment YK-O/KA2118.32
Tetra Pak LUND SWEDEN	STYRPLÅT GUIDE PLATE		3-978 941

PRE-RELEASED/DEVELOPMENT STATE

--	INT AM XXXXX	87XXXX	WHO

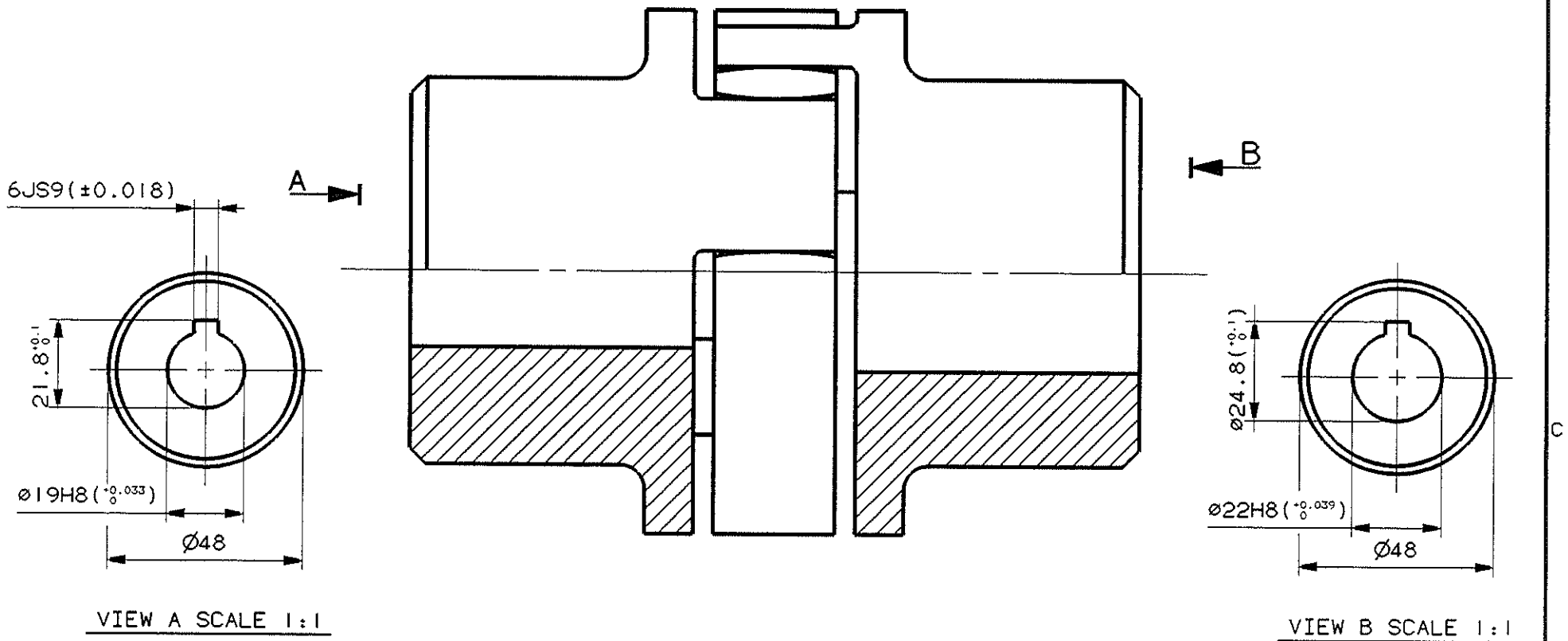

VIEW A SCALE 1:1

VIEW B SCALE 1:1

DESIGNATION

MULTIFLEXKOPPLING
STORLEK M3

MANUFACTURE

BENZLER

SUPPLIER

BENZLER

Unless otherwise stated SHARP EDGES BROKEN	Tolerance for non-toleranced dimensions		S-978944 Assembly drawing
Marked with PART NUMBER	Designer HHO	Material	
	Date 930406	Scale 2:1	Surface roughness
Method ...../..... KA 2103.10	Approved		Surface treatment
Tetra Pak LUND SWEDEN	KOPPLING COUPLING		3-978 951

PRE-RELEASED/DEVELOPMENT STATE

--	INT AM XXXXX	93XXXX	XXX

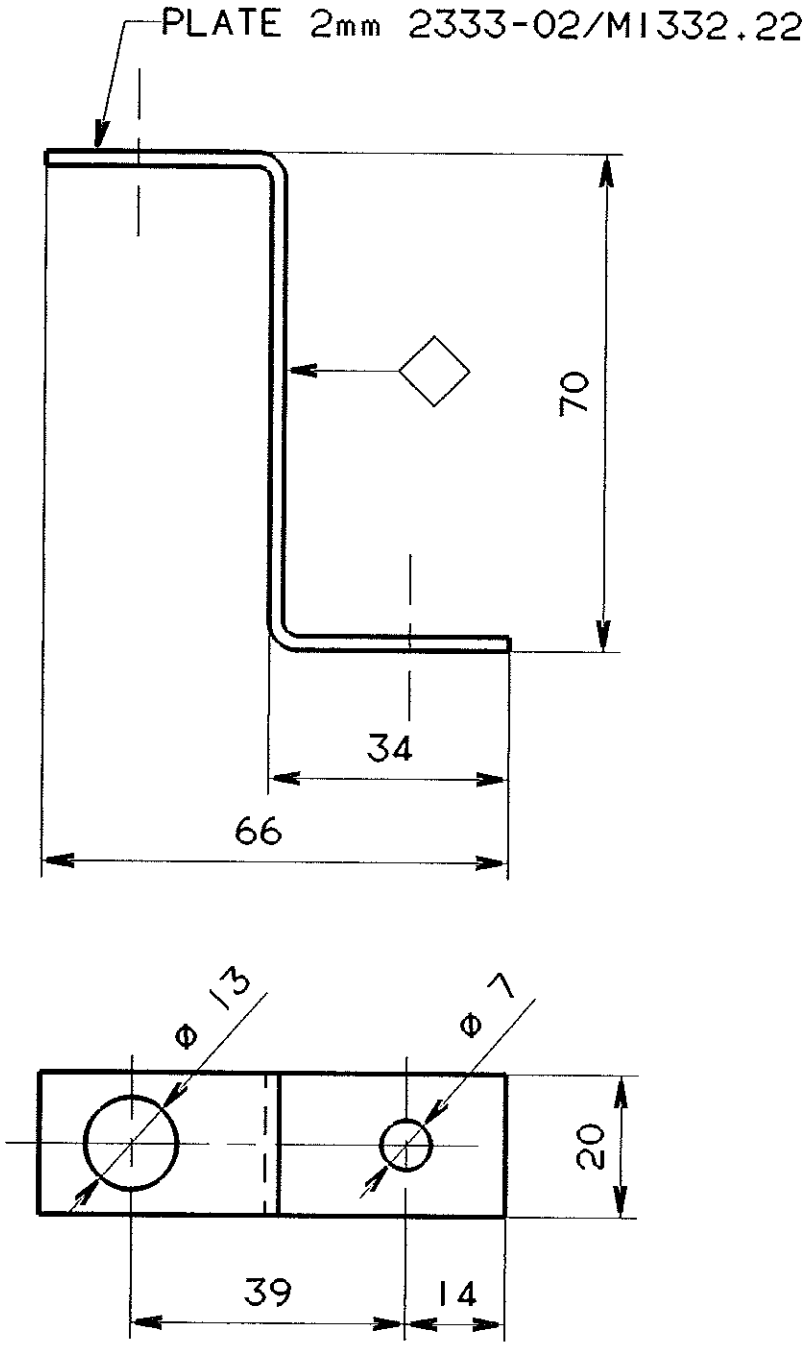

S-978978

Assembly drawing

Unless otherwise stated SHARP EDGES BROKEN

Tolerance for non-toleranced dimensions ±0.5

Marked with PART NUMBER

Method SST.3 KA 2103.10

Designer HHO

Date 930527

Approved

Material SE OVAN/SEE ABOVE

Scale 1 : 1

Surface roughness 6.3

Surface treatment YK-0/KA2118.32

Tetra Pak LUND SWEDEN

FÄSTE BRACKET

4-978 974

PRE-RELEASED/DEVELOPMENT STATE

--	INT AM XXXXX	93XXXX	XXX

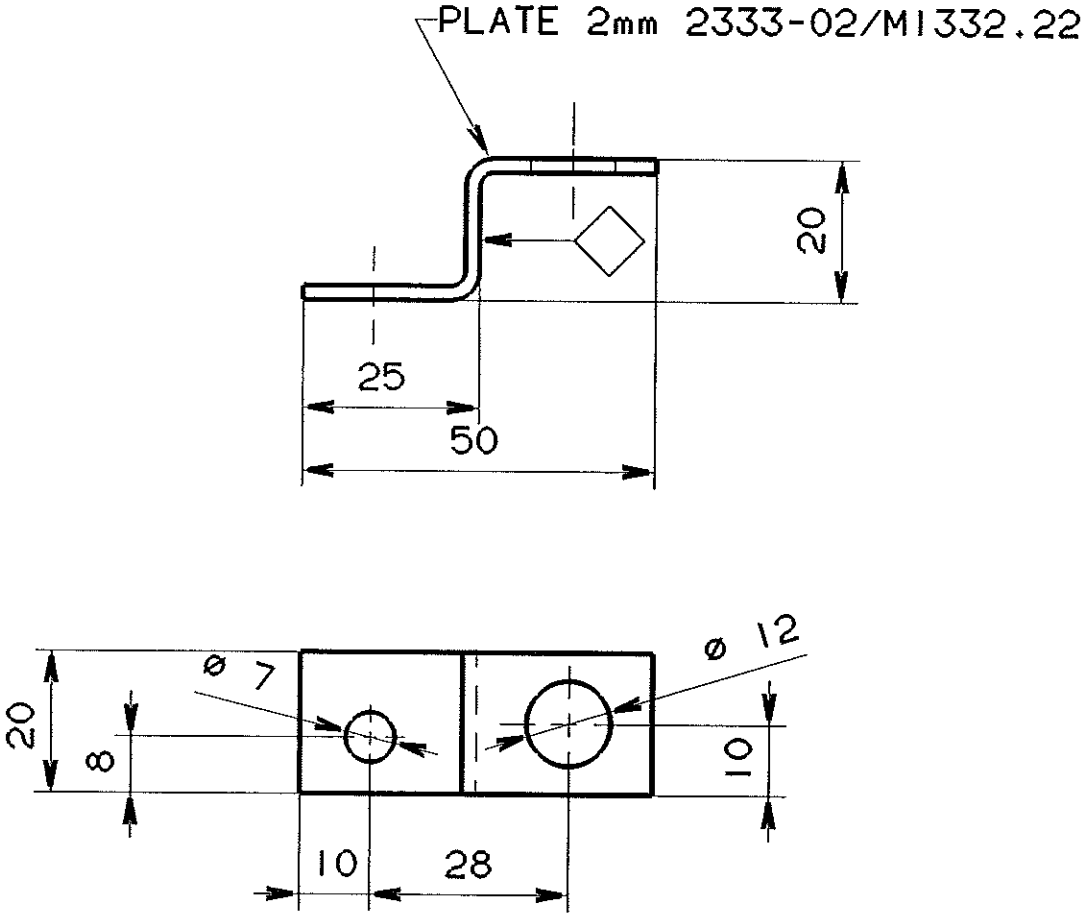

S-978979

Assembly drawing

Unless otherwise stated SHARP EDGES BROKEN	Tolerance for non-toleranced dimensions ±0.5		
Marked with PART NUMBER	Designer HHO	Material SE OVAN/SEE ABOVE	
Method SST/3 KA 2103.10	Date 930527	Scale 1 : 1	Surface roughness 6.3
	Approved		Surface treatment YK-0/KA2118.32

Tetra Pak LUND SWEDEN

FÄSTE
BRACKET

4-978 975

PRE-RELEASED/DEVELOPMENT STATE

--	INT AM XXXXX	93XXXX	XXX

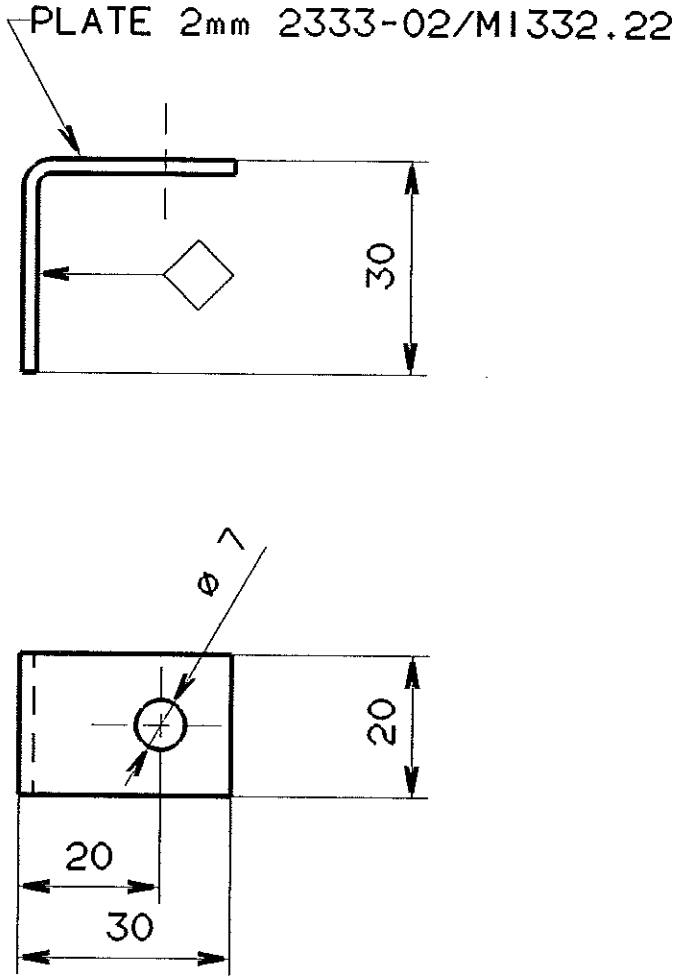

Unless otherwise stated SHARP EDGES BROKEN	Tolerance for non-toleranced dimensions ±0.5		S-978978 Assembly drawing
Marked with PART NUMBER	Designer HHO	Material SE OVAN/SEE ABOVE	
Method SST/3 KA 2103.10	Date 930527	Scale 1 : 1	Surface roughness 6.3
	Approved		Surface treatment YK-0/KA2118.32
Tetra Pak LUND SWEDEN	BLECK PLATE		4-978 976

PRE-RELEASED/DEVELOPMENT STATE

--	INT AM XXXXX	93XXXX	XXX

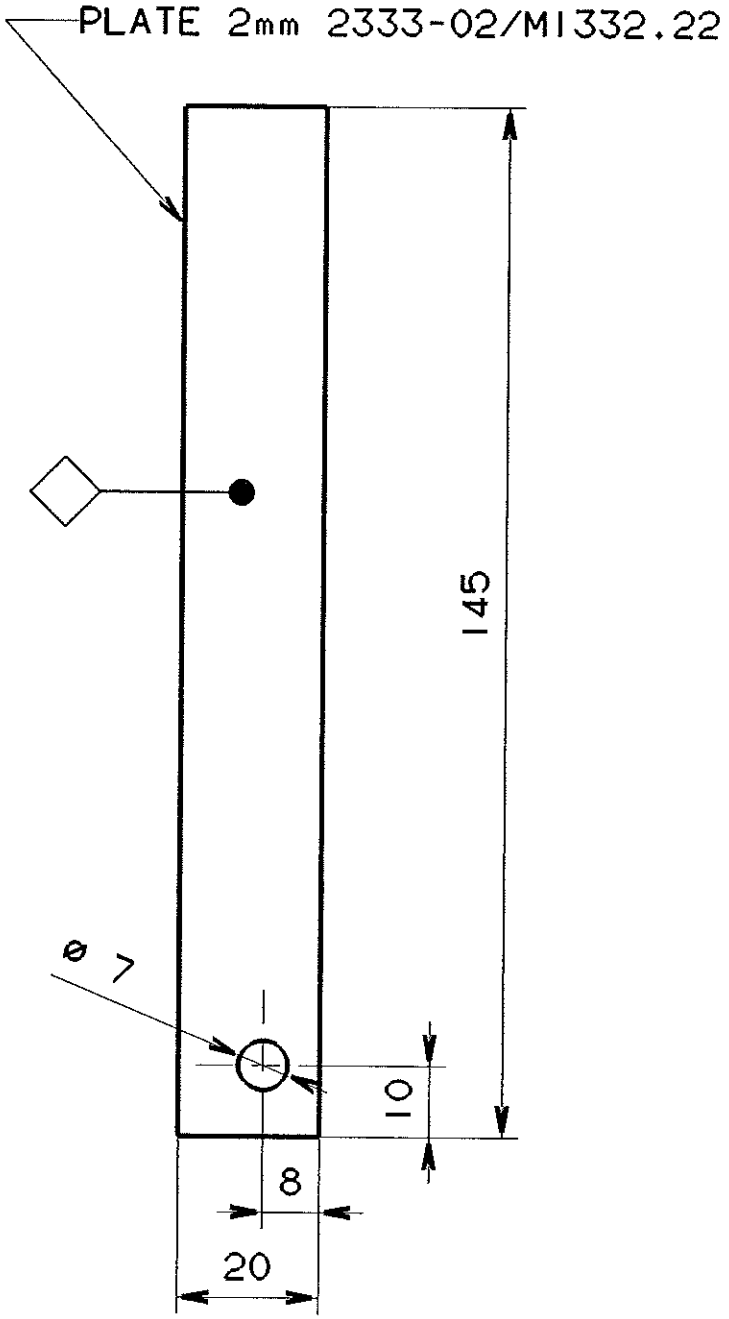

Unless otherwise stated SHARP EDGES BROKEN	Tolerance for non-toleranced dimensions ±0.5		S-978979 Assembly drawing
Marked with PART NUMBER	Designer HHO	Material SE OVAN/SEE ABOVE	
Method SST/3 KA 2103.10	Date 930528	Scale 1:1	Surface roughness 6.3
	Approved		Surface treatment YK-0/KA2118.32
Tetra Pak LUND SWEDEN	BLECK PLATE		4-978 977

COMPONENT LIST

This list contains the parts needed to build the test unit. The final folder itself is not listed.

THE TRANSPORTATION OF PACKAGES	amount
Drive unit conveyer, 21m/min	1
180-turn conveyer	1
90-turn conveyer	2
1 meter conveyer chain	12
1 meter straight conveyer	3
Leg drive unit	1
Leg turn	3
Hose brake unit	1
Single photo cell	2
Double photo cell	1

FEEDING UNIT

Magazine

Magazine	1
Cylinder magazine	1
Chute from magazine to FF-chute	1
Holder for magazine	1

Infeed unit

Cylinder infeed unit	1
Holder for infeed cylinder	1
Cylinder stop gate	1
Holder stop gate cylinder	1
Stop gate	1

Pneumatic list

Complete unit with four outputs

CONTROL PANEL, CABINET

TPMC

Input module	2
Terminal block input module	2
Output module	2
Terminal plinth output module	2
Rack	1
Power supply	1
Processor	1
Adapter	1
Terminal plinth adapter	1
Frequency converter with connections	1
Cabinet with cooling-fan and filter	1
Lamp	7
Button	11
Emergency stop button	1
Switch	1

MEASUREMENTS AND REGISTRATION

Proximity switch for chute with holder	1
Proximity switch other	5
Inductive proximity sensor OMRON	1
Temperature indicator bar	1
Temperature indicator dish water	1-2
Pressure switch WIKA	1
Pressure switch D. Tecalemit	1
Registration unit	1

CABLES

Cable dark blue 0,75 mm^2	100 m
Cable yellow-green 0,75 mm^2	10 m
Cable red 0,75 mm^2	25 m
Cable yellow-green 2,50 mm^2	10 m
Cable black 2,50 mm^2	30 m

OTHERS

Container for detergent/product	2
Pump	2
Holder pump	2
Hose pump	2
Hydraulic pressure unit	1
Motor, 1.1 kW	1
Holder motor	1
Coupling motor axle	1
FF-chute	1
Frame for FF	1
Lubrication tank with connections	1