Popular Science Summary- Automation IO

Imagine if there was a way to control and interact with any low-level device wirelessly, the possibilities would be endless. The Bluetooth Automation IO profile attempts to do just this. Today you can find Bluetooth almost everywhere; it is in cars, phones, headsets, portable speakers, etc. Bluetooth has recently made its way into smaller-, embedded-systems and can now be found in even the smallest devices. Just as you can play music from your phone to any portable speaker, regardless of its manufacturer, imagine if there was a way to interact with all of these small devices in a standardized way. Bluetooth profiles are what allows this fantastic compatibility between devices and specify how devices communicates to accomplish use cases, such as streaming audio between a phone and a speaker. Automation IO is such a profile for low-level communication between any arbitrary device.

The Automation IO profile for Bluetooth Low Energy (Bluetooth LE) was designed to provide a low-level standardized way for exposing digital and analog inputs/outputs on a Bluetooth enabled device. Just like we can play music on any wireless Bluetooth speaker using a phone, we can now monitor and control any general purpose input/output (GPIO). It is possible to express nearly anything as the state of GPIO pins, everything from the value of an arbitrary sensor to the on/off switch of a control system. Bluetooth LE was adopted in the Bluetooth 4.0 core specification in 2010 and allows for Bluetooth connectivity in small battery powered devices.

The goals of this thesis have been to evaluate the Automation IO profile and what role it has in the IoT (Internet of Things), how it compares to other wireless methods of exposing GPIOs, and how to integrate the service into an existing connectivity module. We conducted this thesis at u-blox and thus all of our practical evaluations were based on work done with one of their cable replacement modules.

To evaluate Automation IO, we conducted an investigation of the underlying wireless technology, Bluetooth LE, and how it compares with other low powered wireless technologies. The other technologies we included for this study were ZigBee and Thread. The metrics we used for the comparison were memory requirements, power consumption, and security, as these are all important metrics for a low powered wireless technology. We found that Bluetooth LE is an excellent medium for exposing GPIOs, with low power consumption, good security, and a small memory footprint. One of the only drawbacks of the Bluetooth LE technology was that it is a single-hop technology and thus lack the native mesh technology provided by the other technologies. Mesh is a major selling point for e.g. home automation, where ZigBee is currently one of the market leading technologies. Thread was the technology that compared most favorably to Bluetooth LE in regards to our metrics,

and thanks to its mesh networking capabilities and IPv6 functionality, we predict that it might be a contender for ZigBee's spot as the market leader in home automation in the near future. We also investigated the possible uses for Automation IO and why there existed a need for a standardized way of exposing the GPIOs of a device. Providing a low-level interface to wirelessly monitor and control the pins of any I/O module brings with it nearly endless possibilities and should open new doors for Bluetooth LE in the IoT and automation market.

To investigate the potential of Automation IO and how an Automation IO Service would interact with an existing IoT module, we developed a prototype of the service and integrated it into a u-blox cable replacement module. In order to ascertain whether our prototype interfered with the other services offered in the module, we performed several integration tests. These tests indicated that our prototype doesn't interfere with other parts of the software, as long as Automation IO is used for regular use cases. This evaluation can also serve as general guidelines for how including an Automation IO Service in any connectivity device impacts the system. Since u-blox cable replacement modules are often placed in hard to reach areas, we also encountered the question of how to best provision the module with the Automation IO Service. We concluded that running a start-up script, or a custom over the air solution were the most efficient solutions.

In conclusion, we found that the Automation IO profile provided a comprehensive and flexible interface for low-level control of IOMs that has previously been missing in Bluetooth LE. We also concluded that it was possible to run Automation IO in an existing connectivity solution, such as a u-blox cable replacement module, with low interference. Finally, we also found several use cases for the profile where there previously didn't exist a standardized way to send the required data and why having a standard is so important.

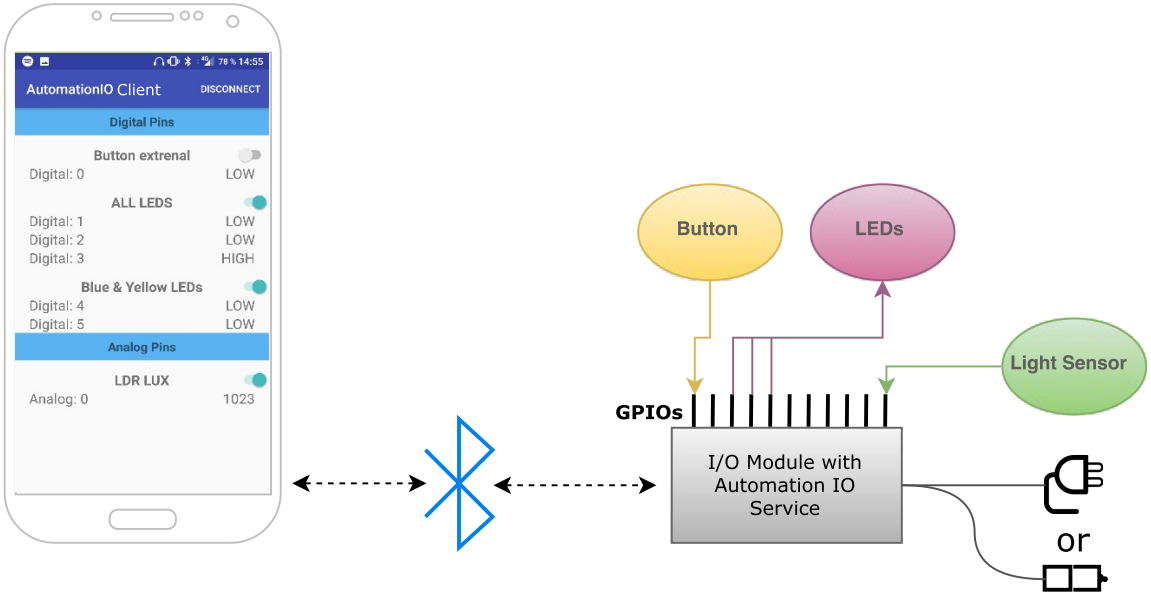

Example Automation IO setup.