LUND UNIVERSITY

The Predictive First Order Hold Circuit

Bernhardsson, Bo

1990

Document Version:
Publisher's PDF, also known as Version of record

Link to publication

Citation for published version (APA):
Bernhardsson, B. (1990). *The Predictive First Order Hold Circuit*. (Technical Reports TFRT-7458). Department of Automatic Control, Lund Institute of Technology (LTH).

Total number of authors:
1

General rights
Unless other specific re-use rights are stated the following general rights apply:
Copyright and moral rights for the publications made accessible in the public portal are retained by the authors and/or other copyright owners and it is a condition of accessing publications that users recognise and abide by the legal requirements associated with these rights.
• Users may download and print one copy of any publication from the public portal for the purpose of private study or research.
• You may not further distribute the material or use it for any profit-making activity or commercial gain
• You may freely distribute the URL identifying the publication in the public portal

Read more about Creative commons licenses: https://creativecommons.org/licenses/

Take down policy
If you believe that this document breaches copyright please contact us providing details, and we will remove access to the work immediately and investigate your claim.

LUND UNIVERSITY

PO Box 117
221 00 Lund
+46 46-222 00 00

Download date: 08. Dec. 2025

CODEN: LUTFD2/(TFRT-7458)/1–05/(1990)

The Predictive First Order Hold Circuit

Bo Bernhardsson

Department of Automatic Control
Lund Institute of Technology
July 1990

Department of Automatic Control
Lund Institute of Technology
P.O. Box 118
S-221 00 Lund Sweden

Document name
INTERNAL REPORT

Date of issue
July 1990

Document Number
CODEN: LUTFD2/(TFRT-7458)/1–05/(1990)

Author(s)
Bo Bernhardsson

Supervisor

Sponsoring organisation

Title and subtitle
The Predictive First Order Hold Circuit

Abstract

Paper to be presented at the 29th CDC.

In this paper the 'predictive first order hold' circuit is introduced and analyzed. The main advantage with this hold circuit is that it gives a continuous control signal. Conditions for causality and a pole placement procedure are presented. Formulas for sampling a LQG-problem are given. This is used to analyze an example where it is rigorously shown that the predictive first order hold can give superior performance compared to the best ZoH control law.

Key words
Digital Control, Hold Circuit, Post Sampling Filter

Classification system and/or index terms (if any)

Supplementary bibliographical information

ISSN and key title

ISBN

Language
English

Number of pages
5

Security classification

Recipient's notes

The report may be ordered from the Department of Automatic Control or borrowed through the University Library 2, Box 1010, S-221 03 Lund, Sweden, Telex: 33248 lubbis lund.

The Predictive First Order Hold Circuit

Bo Bernhardsson
Department of Automatic Control
Lund Institute of Technology
Box 118, S-221 00 Lund, Sweden

Abstract. In this paper the 'predictive first order hold' circuit is introduced and analyzed. The main advantage with this hold circuit is that it gives a continuous control signal. Conditions for causality and a pole placement procedure are presented. Formulas for sampling a LQG-problem are given. This is used to analyze an example where it is rigorously shown that the predictive first order hold can give superior 'performance' compared to the best ZoH control law.

Keywords: Digital Control, Hold Circuit, Post-sampling Filter

Introduction

Digital-to-analog conversion consists of transforming a sequence of digital information into an equivalent analog signal. The choice of hold circuit in computer controlled systems has been discussed for a long time and traditionally the zero order hold circuit, giving a piecewise constant signal during the sampling interval is chosen, see e.g. [3],[4],[5]. In this paper we will discuss the 'predictive first order hold circuit', (PFoH). This hold circuit is usually rejected being physically non-realizable, see e.g. [3],[4]. This is true if the problem is to reconstruct a general time signal. But when the problem at hand is to perform D/A-conversion of a control signal satisfying a model like

$$R(q)u(k) = -S(q)y(k) + T(q)u_c(k)$$

the total control system will be physically realizable whenever

$$\deg R \geq \deg S + 1, \quad \text{and} \quad \deg R \geq \deg T + 1$$

This trivial observation seems surprisingly enough to have been overlooked for a long time.

The main advantage with chosing the PFoH is the smooth control signal. Generally there will be some kind of trade-off between how much roll-off the hold circuit is to introduce and how far in the future one must predict the input signal. This trade-off has to the author's knowledge not been analyzed yet. We will in this paper show by analysis and examples that the PFoH is superior to both ZoH and the traditional first order hold, FoH, if the smoothness of the control signal is important.

It is interesting to note that some renewed interest in the choice of hold circuits has been noticed in the literature, the idea being that the zeros of the sampled system can, as presented in [6], be positioned arbitrarily. This will e.g. reduce the problems some adaptive algorithms have in the case of non-minimum phase systems. The practical implications has been small since these methods generally give violent control signals. This paper has a different motivation and follows different lines.

The predictive first order hold circuit

The traditional first order hold circuit as presented in e.g. [1] or [3] produces a signal satisfying

$$u(kh+s) = u(kh) + \frac{s}{h}(u(kh) - u(kh-h)) \quad (1)$$

We will now introduce the predictive first order hold. The difference will be that the derivative is approximated with a forward difference instead of a backward difference:

$$u(kh+s) = u(kh) + \frac{s}{h}(u(kh+h) - u(kh)) \quad (2)$$

Figure 1. shows a comparison of the impulse responses for the different hold circuits.

Note that (2) requires the knowledge of $u(kh+h)$ at time $t = kh$. This will give new, slightly more restrictive, degree conditions on the control law for causality as we will see in the next section. Although having this drawback we will show that there are cases where (2) gives superior performance compared to the more often used zero order hold or the traditional first order hold circuit (1). The

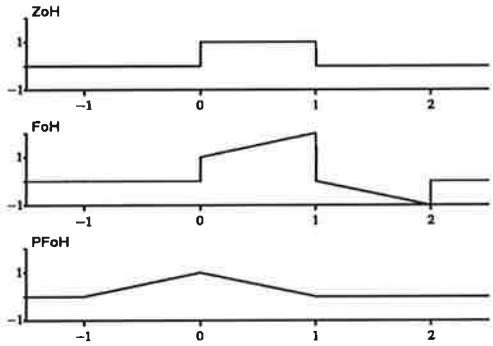

Figure 1. Impulse responses for a) ZoH b) FoH c) PFoH

main reason for this is that (2) is the only one guaranteed to give a continuous control signal. The advantage of this is obvious: decreased actuator wear, less excitation of the high frequency part of the system, less problem with high frequency unmodeled dynamics, see [9] for a discussion of this problem in an adaptive context, etc.

If $u(t)$ is a continuous time, twice differentiable signal it is easy to see that

$$\begin{aligned} \max_t |u(t) - u_{FoH}(t)| &\leq h^2 \max_t |u''(t)| \\ \max_t |u(t) - u_{PFoH}(t)| &\leq \frac{h^2}{8} \max_t |u''(t)| \end{aligned} \tag{3}$$

Predictive FoH sampling of a system

Assume that the analogue hold circuit is so constructed so that the analogue signal satisfies (2). The control signal can then be represented by the sampled signal $\{u(kh),\ k = -1, 0, 1, \ldots\}$. Assume that the system to be controlled is described by

$$\begin{aligned} \dot{x} &= Ax + Bu \\ y &= Cx + Du \end{aligned} \tag{4}$$

The relationship between the system variables at the sampling instances can then be determined as in [1]. More direct is to write (2) and (4) as

$$\frac{d}{dt}\begin{pmatrix} x \\ u \\ \dot{u} \end{pmatrix} = \begin{pmatrix} A & B & 0 \\ 0 & 0 & I \\ 0 & 0 & 0 \end{pmatrix}\begin{pmatrix} x \\ u \\ \dot{u} \end{pmatrix} \tag{5}$$

from which directly follows that

$$\begin{pmatrix} x_{kh+h} \\ u_{kh+h} \\ \dot{u}_{kh+h} \end{pmatrix} = exp(\begin{pmatrix} A & B & 0 \\ 0 & 0 & I \\ 0 & 0 & 0 \end{pmatrix} h)\begin{pmatrix} x_{kh} \\ u_{kh} \\ \frac{u_{kh+h} - u_{kh}}{h} \end{pmatrix} \tag{6}$$

If the first row of $exp\{\cdot\}$ is denoted $\begin{pmatrix} \Phi & \Gamma & \Gamma_1 \end{pmatrix}$ we hence have

$$x(kh+h) = \Phi x(kh) + \Gamma u(kh) + \Gamma_1 \frac{u(kh+h) - u(kh)}{h} \tag{7}$$

The same idea directly generalizes to an nth order hold circuit.

An alternative formula giving a description in the form $y(k) = H(q)u(k)$ for the predictive first order hold is

$$H(z) = \frac{(z-1)^2}{hz} \mathcal{Z}\mathcal{L}^{-1}(\frac{G(s)}{s^2}) \tag{8}$$

Because of (8) a standard table for ZoH-sampling can be used.

Degree conditions for causality

To get a causal control law we must be able to calculate $u(kh+h)$ at time $t = kh$. If the control law is described by

$$R(q)u = -S(q)y + T(q)u_c \tag{9}$$

this means that the degree conditions for causality of the PFoH together with (9) is

$$\begin{aligned} \deg R &\geq \deg S + 1 \\ \deg R &\geq \deg T + 1 \end{aligned} \tag{10}$$

This immediately leads to the following modified theorem for pole-placement design using PFoH.

THEOREM 1
Assume that $y(k) = \frac{B_p(q)}{A_p(q)}u(k)$ is the predictive FoH sampled version of the system obtained as in (6) or (8). Then there exists a control law satisfying the casuality conditions (10) giving the closed loop system

$$\frac{B_p T}{A_p R + B_p S} = \frac{B_m}{A_m}$$

if

$$\begin{aligned} \deg A_m - \deg B_m &\geq \deg A_p - \deg B_p + 1 \\ \deg A_o &\geq 2\deg A_p - \deg A_m - \deg B_p^+ \end{aligned} \tag{11}$$

where B_p^+ contain the zeros and A_o the poles that are to be cancelled.

Proof: Analogous to [1], using (10). □

Remark. If the reference signal $u_c(k)$ is known d steps ahead the first equation in (11) can be changed to

$$\deg A_m - \deg B_m \geq \deg A_p - \deg B_p + 1 - d \tag{12}$$

Implementation

The control law (2) can easily be implemented in analogue hardware using operational amplifiers as in Figure 2. Note that the hardware does not have to be changed when the sampling interval is changed.

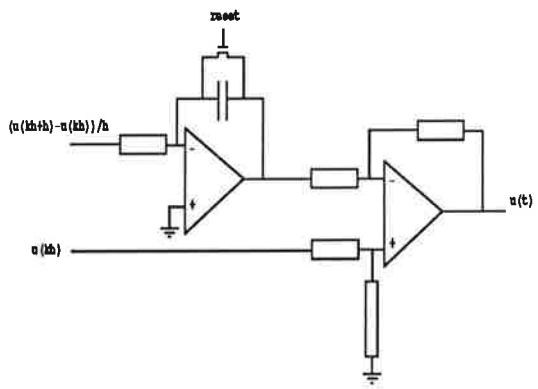

Figure 2. Implementation of PFoH

Analysis of the PFoH and Examples

The main advantage of the PFoH is the less violent control signals. We will now analyze this more thoroughly. Let the impulse response for the PFoH be $h(t)$, see Fig. 1c, then

$$u_{PFoH}(t) = \sum_{k=-\infty}^{\infty} h(t-kh)u(kh) \qquad (13)$$

and

$$U_{PFoH}(i\omega) = H(i\omega)\frac{1}{h}\sum_{k=-\infty}^{\infty} U(i\omega + 2\pi ik/h) \quad (14)$$

One can now reason as follows: The important part of the control spectrum is the part up to, say, 10 times the bandwidth of the closed loop system. Since the sampling rate ω_s is chosen accordingly, e.g. 10-30 times the closed loop system bandwidth, it follows that the important part of the input spectrum is contained in the 'base-band' $[-\pi/h, \pi/h]$. Above this we just want to filter out the high frequency part of the input. A traditional ZoH or FoH will do this and it will introduce a filtering with roll of 1. A PFoH however gives roll off 2. See figure 3 for a comparison of the low pass filtering introduced by the different hold circuits.

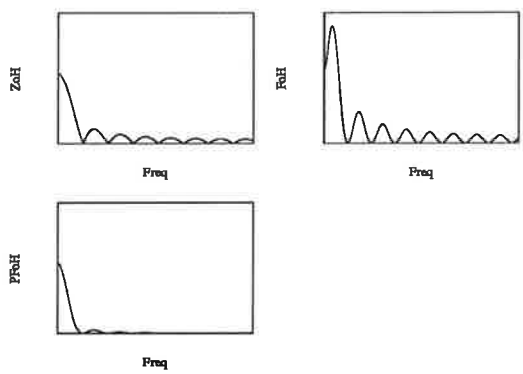

Figure 3. Low pass filtering introduced by different hold circuits, a) ZoH b) FoH c) PFoH

As a matter of fact the PFoH is a standard choice of filtering well known in the signal processing literature under the name of 'Bartlett' window, see e.g. [2].

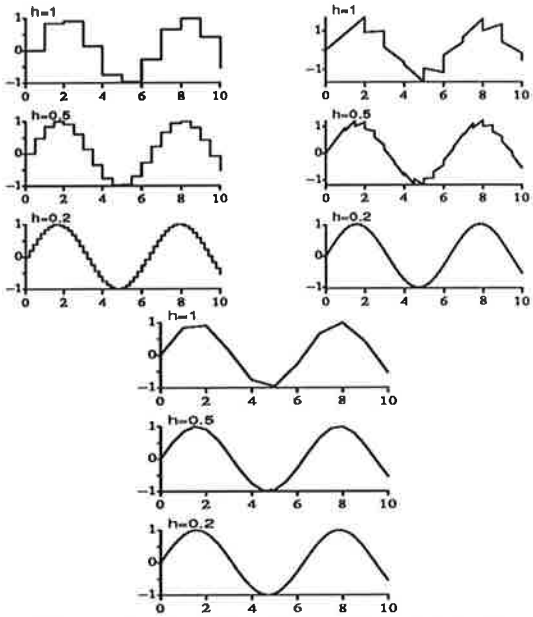

Figure 4. Sampling of sinusoidal, a) ZoH b) FoH c) PFoH

EXAMPLE 1—PFoH of Sinusoidal Signal
Figure 4. shows the result of sampling and reconstructing $\sin(t)$ using ZoH, FoH and PFoH for different sampling rates.

The maximum error using the differents schemes can be estimated using (3) by

$$e_{ZoH} \leq \frac{2\pi}{N}$$
$$e_{FoH} \leq \frac{4\pi^2}{N^2}$$
$$e_{PFoH} \leq \frac{\pi^2}{2N^2}$$

where N is the number of samples per period. Some typical values are given in Table 1

Samples per period N	Maximum Error		
	ZoH	FoH	PFoH
5	1.2566	1.5791	0.1974
10	0.6283	0.3948	0.0493
20	0.3142	0.0987	0.0123
50	0.1257	0.0158	0.0020
100	0.0628	0.0039	0.0005
200	0.0314	0.0010	0.00012
500	0.0126	2e-4	2e-5

Table 1. Errors when sampling and reconstructing a sine curve using different sampling rates

The standard conclusion, see [1], is that FoH is significantly better than ZoH only if N is larger than 20. From Table 1 we see that PFoH is superior to ZoH and FoH for all sampling rates.

EXAMPLE 2—The motor
Assume that the process to be controlled is the so-called 'professor motor'

$$G(s) = \frac{1}{s(s+1)}$$

Predictive first order hold sampling gives

$$H(q) = \frac{B_d(q)}{A_d(q)} = \left[\alpha = e^{-h}\right]$$
$$= \frac{h}{(q-1)(q-\alpha)}\Big((1-\alpha+h(\frac{h}{2}-1))q^2 + ((1-\alpha)$$
$$(h^2/2-2)+h(1+\alpha))q + 1 - \alpha - \alpha h(\frac{h}{2}+1)\Big)$$

Note that H will have relative degree 0. This is because $u(kh+h)$ directly influences $x(kh+h)$, see (7).

Assume we want a closed loop system characterized by the pulse-transfer operator

$$H_m(q) = \frac{B_d(q)}{q(q^2+p_1q+p_2)}\frac{1+p_1+p_2}{B_d(1)}$$

so that we do not cancel any zeros, e.g. $B^+ = 1$. We know from theorem 1 that we need an observer of degree $\deg A_o \geq 1$. The controller will be

$$\begin{aligned} R(q) &= q^2 + 0.2200q + 0.0423 \\ S(q) &= 1.787q - 0.8921 \\ T(q) &= 0.895q \end{aligned} \tag{15}$$

where we have used the same numerical values as in example 10.5 in [1], that is $\omega = 1, \zeta = 0.7, h = 0.5$ and deadbeat observer. Figure 5 shows the step response using (15) and the ZoH-controller in [1]. Notice the much smoother control signal using PFoH. Also notice the small delay of about half a sampling interval.

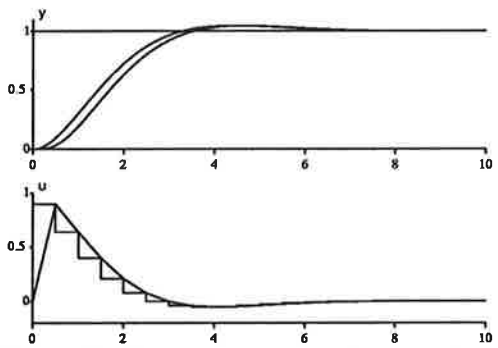

Figure 5. Step responses for motor example a) ZoH b) PFoH

EXAMPLE 3—LQG, high frequency punishment of u
This example will show that there are design problems where the best PFoH control law satisfying the more restrictive degree conditions (10) are better than the best ZoH control law satisfying the usual degree conditions,

$$\deg R \geq \deg S \text{ and } \deg R \geq \deg T \tag{16}$$

The problem we will analyze is an integrator with an initial value disturbance

$$\begin{aligned} \dot{x} &= u \\ x(0) &= x_0 \end{aligned}$$

Let the criteria be a weighted LQG-criteria

$$J = \int_0^\infty \left(|Y(i\omega)|^2 + |H(i\omega)U(i\omega)|^2\right)\frac{d\omega}{2\pi} \tag{17}$$

where $H(s) = s/(1+sT)$ is a high pass filter giving a larger penalty on high frequencies in the control signal. We will show that

$$\min_{u\in U_{ZoH}} J > \min_{u\in U_{PFoH}} J$$

where

$$U_{ZoH} = \{u \mid u \text{ is piecewise constant \& satisf. (16)}\}$$
$$U_{PFoH} = \{u \mid u \text{ is piecewise linear \& satisf. (10)}\}$$

To do this we will generalize the formulas for sampling of a continuous time quadratic loss function to PFoH.

Sampling of a quadratic loss function when u is PFoH

THEOREM 2
Assuming PFoH as in (2), the loss function

$$J = \int_0^{Nh} \begin{pmatrix} x(t) \\ u(t) \end{pmatrix}^T \underbrace{\begin{pmatrix} Q_{1c} & Q_{12c} \\ Q_{12c}^T & Q_{2c} \end{pmatrix}}_{=:Q_c} \begin{pmatrix} x(t) \\ u(t) \end{pmatrix} dt$$
$$+ x^T(Nh)Q_0x(Nh)$$

can be rewritten as

$$J = \sum_0^{N-1}\left(\begin{pmatrix} x(kh) \\ u(kh) \\ \Delta u_k \end{pmatrix}^T \underbrace{\begin{pmatrix} Q_{1d} & Q_{12d} \\ Q_{12d}^T & Q_{2d} \end{pmatrix}}_{=:Q_d} \begin{pmatrix} x(kh) \\ u(kh) \\ \Delta u_k \end{pmatrix}\right)$$
$$+ x(Nh)^TQ_0x(Nh) \tag{18}$$

Where $\Delta u_k = (u(kh+h) - u(kh))/h$ and

$$Q_d = \int_0^h \Psi^T(s)Q_c\Psi(s)\,d\tau$$
$$\Psi(\tau) = \begin{pmatrix} \Phi(\tau) & \Gamma(\tau) & \Gamma_1(\tau) \\ 0 & I & \tau I \end{pmatrix}$$

Proof: An elegant proof is obtained by noticing that the system equations can be written as (5). This directly gives

$$\begin{pmatrix} x(t) \\ u(t) \\ \dot{u}(t) \end{pmatrix} = \exp\left(\begin{pmatrix} A & B & 0 \\ 0 & 0 & I \\ 0 & 0 & 0 \end{pmatrix}(t-kh)\right)\begin{pmatrix} x(kh) \\ u(kh) \\ \Delta u_k \end{pmatrix} \tag{19}$$

from which the theorems follows by denoting the first two rows with Ψ. □

Remark. The integrals in (18) can easily be numerically calculated using a standard 'doubling'-technique, see e.g. [8].

Continuing the LQG-problem, we will consider the problem (17) in the time domain

$$\begin{aligned} \dot{x} &= \begin{pmatrix} 0 & 0 \\ 0 & -1/T \end{pmatrix} x + \begin{pmatrix} 1 \\ -1/T \end{pmatrix} u \\ J &= \int_0^\infty x_1^2(t) + (u(t) + x_2(t))^2 \, dt \end{aligned} \tag{20}$$

The ZoH-problem can be solved transforming the continuous time loss function to discrete time, see e.g. [1]. For the PFoH problem we instead use Theorem 2 which gives

$$\begin{aligned} \begin{pmatrix} x_{kh+h} \\ u_{kh+h} \end{pmatrix} &= \begin{pmatrix} \Phi & \Gamma \\ 0 & I \end{pmatrix} \begin{pmatrix} x_{kh} \\ u_{kh} \end{pmatrix} + \begin{pmatrix} \Gamma_1 \\ h \end{pmatrix} \Delta u_k \\ \min \sum_0^\infty \left(\begin{pmatrix} x(kh) \\ u(kh) \\ \Delta u_k \end{pmatrix}^T Q_d \begin{pmatrix} x(kh) \\ u(kh) \\ \Delta u_k \end{pmatrix} \right) \end{aligned} \tag{21}$$

This can be solved as a standard LQG-problem, considering Δu_k as a new input on a system with states $\begin{pmatrix} x(kh) & u(kh) \end{pmatrix}^T$. The resulting control law can be written

$$\begin{aligned} \Delta u_k &= f(x(kh), u(kh), \ldots) \implies \\ u(kh+h) &= \tilde{f}(x(kh), u(kh), \ldots) \end{aligned}$$

This shows that the control law has the required delay needed for causality.

Direct solution of the steady state Riccati equation in the two cases gives

$$\begin{aligned} J_{ZoH} &= S_{ZoH}(T) x_0^2 \\ J_{PFoH} &= S_{PFoH}(T) x_0^2 \end{aligned}$$

where $S_{ZoH}(T)$ and $S_{PFoH}(T)$ are shown in Figure 6. From this we see that for large penalties on high frequent control signals, $1/T > 6$, the PFoH is better than the best ZoH.

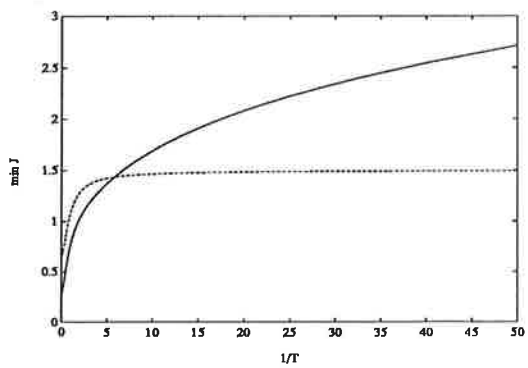

Figure 6. Loss function for ZoH (solid) and PFoH (dashed)

Conclusions

The predictive first order hold circuit has been introduced and investigated. The causality problem is taken care of by demanding there to be at least one delay in the control law. This leads to some slight change in the pole-placement procedure. It is believed that the idea of using a hold-circuit giving a continuous control signal can often lead to better performance. A more low frequent control signal is generally to be preferred before a high frequent if they are able to do the same job. This has been shown rigorously to be true in an example. Another explanation was that the choice of PFoH is equivalent to using a Bartlett window as postsampling filter, giving roll of two in the continuous time input spectrum at high frequencies.

Normally limitations in the actuators of the physical process will determine the shaping of the high-frequency part of the input spectrum. It is better engineering practice to let this shaping be introduced in a controlled way by choosing a better hold circuit.

The implication for choice of sampling interval is not yet clear but is beeing studied.

References

[1] Åström, K. J. and B. Wittenmark (1984, 1989): *Computer Controlled Systems*, Prentice-Hall.

[2] Oppenheim, A. V. and R. W. Schafer (1975): *Digital Signal Processing*, Englewood Cliffs, N.J.: Prentice-Hall, Inc..

[3] Jury, E. (1958): *Sample-Data Control Systems*, New York: McGraw-Hill.

[4] Kuo, B. (1977): *Digital Control Systems*, SRL Publishing Company, Illinois.

[5] Ragazzini, J. R. and G. F. Franklin (1958): *Sampled Data Control Systems.*, New York: McGraw-Hill.

[6] Åström, K. J., P. Hagander and J. Sternby, (1984): "Zeros of sampled systems," *Automatica*, **20**, No. 1, 31-38.

[7] Kabamba, P. (1987): "Control of linear systems using generalized sampled data hold functions," *IEEE Trans. Automat. Contr.*, **AC-32**, No. 9.

[8] Mårtensson, K. (1969): "Linear Quadratic Control Package Part 2 – The Discrete Problem," Report 3010, Department of Automatic Control, Lund Institute of Technology, Lund, Sweden.

[9] Rohr, C. L.S. Valavani, M. Athans, and G. Sterin, (1985): "Robustness of continuous-time adaptive control algorithms in the presence of unmodeled dynamics.," *IEEE Trans. Automat. Contr.*, **AC-30**, 881–889.