LUND UNIVERSITY

Thermal Performance Analysis: An Expert Systems Approach

Surgenor, Brian

1990

Document Version:
Publisher's PDF, also known as Version of record

Link to publication

Citation for published version (APA):
Surgenor, B. (1990). *Thermal Performance Analysis: An Expert Systems Approach*. (Technical Reports TFRT-7453). Department of Automatic Control, Lund Institute of Technology (LTH).

Total number of authors:
1

General rights
Unless other specific re-use rights are stated the following general rights apply:
Copyright and moral rights for the publications made accessible in the public portal are retained by the authors and/or other copyright owners and it is a condition of accessing publications that users recognise and abide by the legal requirements associated with these rights.
• Users may download and print one copy of any publication from the public portal for the purpose of private study or research.
• You may not further distribute the material or use it for any profit-making activity or commercial gain
• You may freely distribute the URL identifying the publication in the public portal

Read more about Creative commons licenses: https://creativecommons.org/licenses/

Take down policy
If you believe that this document breaches copyright please contact us providing details, and we will remove access to the work immediately and investigate your claim.

LUND UNIVERSITY

PO Box 117
221 00 Lund
+46 46-222 00 00

CODEN: LUTFD2/(TFRT-7453)/1-065/(1990)

Thermal Performance Analysis: An Expert Systems Approach

Brian Surgenor

Department of Automatic Control
Lund Institute of Technology
June 1990

Department of Automatic Control
Lund Institute of Technology
P.O. Box 118
S-221 00 Lund Sweden

Document name
Technical Report

Date of issue
June 1990

Document Number
CODEN: LUTFD2/(TFRT-7453)/1–065/(1990)

Author(s)

Dr. Brian W. Surgenor
Dept. Mech. Eng.
Queen's University
Kingston, Canada

Supervisor

Sponsoring organisation

Sydkraft
Vattenfall

Title and subtitle

Thermal Performance Analysis: An Expert Systems Approach

Abstract

This report documents a project whose objective was to *demonstrate* the application of an expert systems software tool to thermal performance analysis. Specifically, a prototype expert system known as BARSE was written using Gensym's G2 for application to Sydkraft's Barsebäck nuclear power plant. The program has three functions: 1) performs the cycle heat and mass balance for the conventional side of the plant (turbine and feedwater systems), 2) identifies the economic impact of off-target thermal performance and 3) implements illustrative system diagnostics.

The program was written over a three month period during the author's stay as a Visiting Professor in the Department of Automatic Control, Lund Institute of Technology. The position is jointly funded by two Swedish utilities: Sydkraft and Vattenfall. The underlying objective of the project was to introduce the utilities to the technology and encourage them to continue with the development of the program. With the second objective in mind, this report is tutorial in nature. Sufficient detail is provided such that an individual with a power engineering background and limited exposure to expert systems should be able to understand the nature of the program and continue its development.

Key words

Classification system and/or index terms (if any)

Supplementary bibliographical information

ISSN and key title

ISBN

Language
English

Number of pages
65

Recipient's notes

Security classification

The report may be ordered from the Department of Automatic Control or borrowed through the University Library 2, Box 1010, S-221 03 Lund, Sweden, Telex: 33248 lubbis lund.

Table of Contents

1. Introduction 3
1.1 Thermal Performance and Expert Systems 3
1.2 Diagnostics and Thermal Performance 7

2. Thermal Analysis 13
2.1 Model Verification 18
2.2 Discussion 19
2.3 Future Work 21

3. Economic Analysis 23
3.1 Sample Results 25
3.2 Discussion 27
3.3 Future Work 28

4. Diagnostic Analysis 29
4.1 Theory of DMP 29
4.2 Sample Applications 31
4.3 Discussion 38
4.4 Future Work 40

5. Conclusions 41
5.1 Comments on G2 41
5.2 Recommendations 43

6. Acknowledgements 44

7. References 44

A. User's Overview 45

B. Model Documentation 55
B.1 Steam Properties 57
B.2 Component Models 58
B.3 Special Models 62

C. Program Documentation 63

1. Introduction

This report documents a project whose objective was to *demonstrate* the application of an expert systems software tool to thermal performance analysis. Specifically, a prototype expert system known as BARSE was written using Gensym's G2 for application to Sydkraft's Barsebäck nuclear power plant. The program has three functions: 1) performs the cycle heat and mass balance for the conventional side of the plant (turbine and feedwater systems), 2) identifies the economic impact of off-target thermal performance and 3) implements illustrative system diagnostics. As BARSE is a prototype and was developed for demonstration purposes only, it should not be viewed as a production tool. A great deal more work must be done before the program can used for its intended application, namely as a thermal performance advisor for the shift engineer and control room operator.

The program was written over a three month period during the author's stay as a Visiting Professor in the Department of Automatic Control, Lund Institute of Technology. The position is jointly funded by two Swedish utilities: Sydkraft and Vattenfall. The underlying objective of the project was to introduce the utilities to the technology and encourage them to continue with the development of the program. With the second objective in mind, this report is tutorial in nature. Sufficient detail is provided such that an individual with a power engineering background and limited exposure to expert systems should be able to understand the nature of the program and continue its development.

1.1 Thermal Performance and Expert Systems

Expert systems as applied to thermal performance is viewed as an application where a direct economic return on investment can be readily demonstrated. The generation cost in a utility power plant comprises three principal components: fuel charges, operating expenses, and capital costs. The relative importance of these factors depends upon the maturity of the station and its role in the generation network. The goal of the plant engineers, after ensuring that the station operates safely and reliably, is to minimize these costs.

There are a large number of commercial tools on the market to monitor thermal performance. However at the present time, no single form of analysis technique has received general acceptance. In addition, it is not uncommon to enter a plant control room and discover that the system for monitoring and reporting on plant thermal performance has fallen into disuse. Typically, the reason would be that the data was presented in a form that could not be interpreted, or that the answers given by the system were sometimes wrong, and consequently the system was no longer trusted or used by the operators.

The basic goal in thermal performance analysis is straightforward; to maximize cycle thermal efficiency in order to minimize fuel charges. The difficulty lies in identifying the optimal efficiency and the factors that prevent the plant from achieving that optimum. Given the nature of the data set obtained from

the measurements provided by the hundreds of sensors in the plant, the exercise becomes one of data management that involves uncertain, noisy, faulty and in many cases incomplete data. This type of data management problem with its underlying diagnostic requirement is an appropriate application of expert systems technology, or in a broader sense the techniques of knowledge based systems (KBS's).

One must be aware that KBS's are not a panacea. A survey conducted by the American Nuclear Society (ANS) in 1988 identified over 298 *prototype* expert systems under development by utilities throughout the world with over 63 application areas, including:

- o Signal validation and alarm processing
- o Plant maintenance management
- o Fuel shuffling and rod sequencing
- o Technical specification monitoring
- o Post-trip analysis
- o Procedures analysis
- o Probabilistic risk assessment
- o Machinery diagnosis
- o Plant data base management

Of the systems identified in the ANS survey, few were judged as successful (Bernard and Washio, 1989, 130). To be fair, any expert system by definition cannot be considered successful until it has been developed to the production stage. As such, it is understandable that few of the prototype systems were considered a "success". Nevertheless, a number of obvious failures were identified with reasons that can be summarized as follows:

- o Applied to a problem more appropriate for a conventional program
- o Not accepted by end-users (poor user interface)
- o Not fast enough (real-time limitation)
- o Wanted answers for a problem for which there was no solution
- o Failed to provide a useable explanation facility
- o Attempted to get an unskilled user to operate at a superior level

The last reason relates to the fact that in successful applications, expert systems have been used to *assist* the experts and *not* replace them. The first reason points to the fact that in many applications one requires a facility for both conventional (algorithmic calculations) and expert system (rule-based diagnostics) programming; and yet the majority of expert systems software cannot be used efficiently for conventional problems. The contention is that with state-of-the-art software such as G2, this criticism is no longer valid.

One should not conclude that there have been no successful applications of utility related expert systems. For an example of a success, one need only look to the various electrical generator diagnostic programs such as GenAID (Westinghouse), TURBOMAC (Hartford), GEMS (Ontario Hydro), TVM (CISE Labs) and DIVA (Electricité de France). The GenAID expert system was developed by Westinghouse Electric Corporation for use at seven turbine-generators operated by Texas Utilities Electric Company (Bernard and Washio, 1989, 51). The system provides continuous monitoring of generator operation. Signals from both existing instrumentation and from special sensors retrofitted at the time of the expert system's installation are transmitted to the control rooms. Each generator's rule base contains approximately 2500 rules and the system is capable of diagnosing more than 550 distinct fault

conditions. From its inception in 1984 to 1986, GENAID has been credited with avoiding 87.6 *million SEK* (14.6 *million US$*) per year in outage costs. Thus, GENAID is a working demonstration of the economic value of a successful expert system. However, the example also illustrates that an expert system by itself is not enough. Sufficient instrumentation and a suitable interface are important. Recall that GenAID required the retrofitting of new sensors. Furthermore, one must consider the nature of the application. Generators rarely fail in a precipitous manner. There are almost always warning signals of low magnitude that persist for days or even weeks. Second, when they do occur, the failures tend to be catastrophic. The resulting economic damage entails not only the loss of the turbine-generator but also the cost of replacement electricity. Third, generator failures occur so infrequently that plant personnel may lack the expertise to recognize the early warning signals. Thus, a generator diagnostics expert system can be off-line; and if a failure is correctly identified, the economic savings can be considerable.

With the above discussion in mind, this project is considered to have the following features:

- Can be justified on a purely economics basis
  (reduction in operating costs)
- Requires both conventional and expert system programming
  (algorithmic-based cycle analysis, heuristic oriented diagnostics)
- Requires a good graphics-oriented user interface
  (method of presentation is as important as what is presented)
- Potential end-user (Barsebäck) suggested the application
  (which should ensure in part user acceptance)

One can make the observation that given a fixed set of clean data, a thermal and economic analysis of a power plant should *not* be performed with an expert system. However, the real data set is not fixed. The program must select 30 data points from a set of 100 noisy and uncertain measurements. Furthermore, the thermal analysis assumes normal operation. Diagnostics must be performed to identify abnormal (fault) conditions to enable the thermal analysis to be corrected accordingly. In conclusion, this demonstration is viewed as both an appropriate and challenging application of expert system techniques.

Some Previous Work

An overview of recent activity by a number of American utilities serves to highlight the level of interest in the application of expert systems to thermal performance analysis.

General Physics marketted one of the first expert systems oriented thermal performance programs (Schroeder et al, 1989). They call their program TPA for Thermal Performance Advisor. TPA provides feedback, problem diagnosis, and advice to plant operations personnel that enables them to maintain or improve power plant performance. Two versions have been developed to date, one for fossil power plants and one for nuclear power plants.

The fossil Thermal Performance Advisor was developed for the New York State Electric & Gas Somerset plant. The thermal TPA provides control room operators with information on 13 controllable parameters such as throttle pressure, main steam temperature and reheat temperature. The interface shows the current parameter values and their associated costs or savings. The

system component of TPA alerts, queries and advises the operator when the cost associated with a controllable parameter exceeds an acceptable limit.

The nuclear Thermal Performance Advisor is under development for the Electric Power Research Institute (EPRI) and the Public Service Electric & Gas Co. of New Jersey. The nuclear TPA will have the same functions as the thermal version. The key difference is that the nuclear version will be used off-line by plant performance engineers.

Kansas City Power & Light Co. implemented a performance monitoring system on a 670 MW coal-fired unit that was reported to have a payback of five to six months (French, 1989). They have estimated savings of $400,000 per year from reduced steam consumption due to judicious sootblowing, increased operator awareness of controllable parameters, and reduced auxiliary power consumption. Though they did not make use of a formal expert system program, they reported on the need for a good user interface and update facility; two features required for the success of an expert systems application.

Northern Indiana Public Service Co. describe a very similar project to that reported by Kansas City Power & Light. Their goal was to improve boiler efficiency by 0.1%. They elected to write their own performance analysis program in PROLOG for implementation on a IBM PC (Kozlik et al, 1988). Their prototype program consists of only 25 to 50 rules. The system is capable of comparing current operation with a rule base of pre-defined "good operation" parameters. From this comparison it is possible to formulate and supply to the operator a list of recommendations to optimize boiler performance. As applied to the feedwater system, the program uses the Drain Cooler Approach (DCA) temperature as an indicator of condensate level problems; a high DCA is assumed to indicate a low heater level. The Terminal Temperature Difference (TTD) is used as an indicator of the efficiency of heat transfer; a high TTD is assumed to indicate poor heat transfer.

Selection of G2

A state-of-the-art expert system tool such as G2, which has the facility for a direct on-line real-time interface to plant data acquisition systems offers a number of advantages; 1) it can perform conventional (algorithmic) analysis, 2) it can perform unconventional (rule-based) analysis, 3) it has a good graphics oriented editor for rapid prototyping and the creation of effective user interfaces, 4) it has a built-in simulator for off-line testing and 5) it can be linked to external C programs (for access to property routines).

Arguably the most attractive feature of G2 is its graphics based development environment with windows (called workspaces), pop-up menus and mouse interaction. The user's interface can consist of various displays (graphs, edgewise meters, circular dials, digital readout tables) and controls (buttons, slides, type-in boxes). An icon editor enables the user to draw custom objects for process components. These objects can be assigned various properties or attributes, for example the full set of quantitative variables required for a model of a feedwater heater.

1.2 Diagnostics and Thermal Performance

Diagnostics are required to perform two functions in support of the thermal and economic analysis components of the program.

- Identification of faulty sensors
- Identification of faults in the process

Faulty sensors must be identified to enable one to decide what data is to be used as the basis for the cycle heat and mass balance. There are a number of redundancies in the data set and these must be resolved before the analysis can proceed. In addition, the model assumes normal operating conditions. The details of any abnormal or process fault conditions (for example a major tube leak) must be identified in order that the model can be corrected accordingly. Three candidate diagnostic tools were considered: Early Fault Detection (EFD), Multilevel Flow Modelling (MFM) and the Diagnostic Model Processor (DMP). Though only the last tool (DMP) was adopted, it is instructive to review the background of all three.

Early Fault Detection

Since about 1985 the OECD Halden Reactor Project has been working on a power plant fault detection system that they have named EFD for Early Fault Detection. Development has focussed on the detection of tube leaks and stuck level control valves in the high and low pressure feedwater heater systems. In 1989, the system was installed and tested at the Lovissa Unit 1 Pressurized Water Reactor operated by Imatran Voima OY (Finland). The system successfully identified a tube leak in a high pressure heater (Sørenssen, 1990). A typical operator interface for the system is illustrated in Figure 1.1.

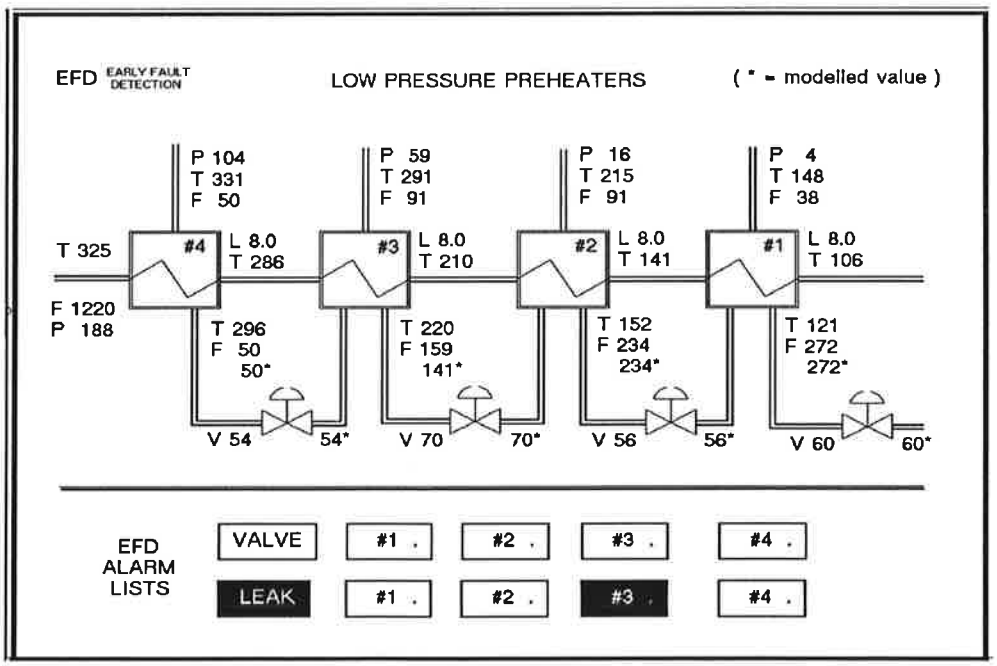

Figure 1.1 Typcial operator interface for the Early Fault Detection system.

EFD uses a steady-state thermal model of a feedwater heater to determine a theoretical value for the heater drain flow and the opening of the level control valve on the drain. These theoretical values are then compared with the actual measured values. When the error between the theoretical and the actual exceeds a certain amount, an alarm is given. In Figure 1.1, two numbers are given for the drain flows and valve openings; a * identifies the theoretical number. In the example, the theoretical drain flow on heater #3 is 141 kg/s, whereas the measured drain flow is 159 kg/s. The conclusion is that a tube leak is causing 18 kg/s of feedwater to escape to the shell or steam side of the feedwater heater and increasing the shell side drain flow proportionally.

A key feature of EFD is that decoupled models are used; the actual drain flows are cascaded between heaters, not the theoretical drain flows. The disadvantage of EFD is that it requires the measurement of all drain flows; an unlikely situation in most power plants. If this is not the case, the decoupling feature is lost and EFD can no longer pinpoint the location of a leak; it can only conclude that there is a leak somewhere in the feedwater system. Another criticism is that the model must be rewritten to account for additional failure modes (for example, an open emergency drain as the cause of the "leak").

Multi-level Flow Modelling

Morten Lind (DTH Copenhagen) has developed a graphical modelling language for application to process fault diagnosis. The language is known as MFM for Multilevel Flow Modelling. The premise of MFM is that the conventional presentation of process may not be the best for diagnostic purposes. The standard way of presenting a process to an operator is in the form of a mimic or piping schematic; this provides a formal description of topological and geographical properties. The conventional presentation of a heat exchanger system is illustrated in Figure 1.2. An alternate view of a process is the functional or goal oriented view. The functional view of the heat exchanger in MFM symbology is illustrated in Figure 1.3. The library of MFM symbols is illustrated by the heat exchanger example. Examination of the *Water flow* network in the figure reveals the four main types of *flow functions*; sources (water and steam), transports (valve, pump, HTX), balances (injector) and sinks (cooling). Other flow functions not shown include barriers and storage elements. The *goal* of the *Water flow* network is to ensure that water is available for the *Heat transfer* network. The goal of the *Heat transfer* network (and the ultimate goal of the heat exchanger) is to heat the product. A failure in the system is interpreted as a failure to fulfill this goal. The connections between the goal and the various functions are referred to as *achieve relations*.

With the MFM approach, various diagnostic strategies can be adopted. Two have been examined by Larsson (1990):

- Once a certain flow function fails (a primary failure), the downstream functions will also fail (secondary failures), as will the goals depending on that part of the function network. For example, if the steam valve should stick, the *Water flow* network would fail, as would the *Heat transfer* network and consequently the main goal of the system. This is an example of a *consequence propagation* strategy.
- If a certain goal is violated, it is possible to trace upstream the achieve relations to the supporting function network, and check whether any of

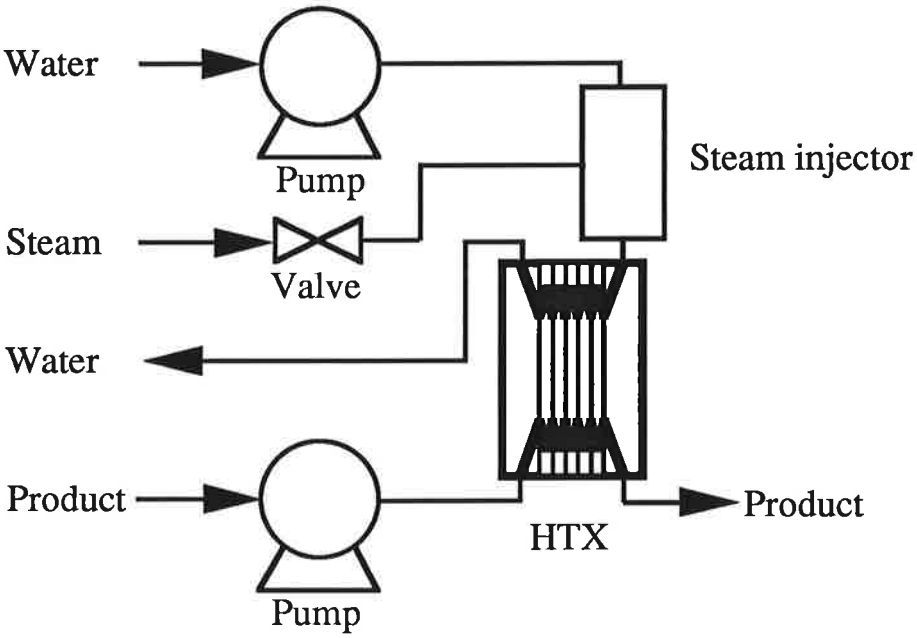

Figure 1.2 Conventional or topological view of a heat exchanger system.

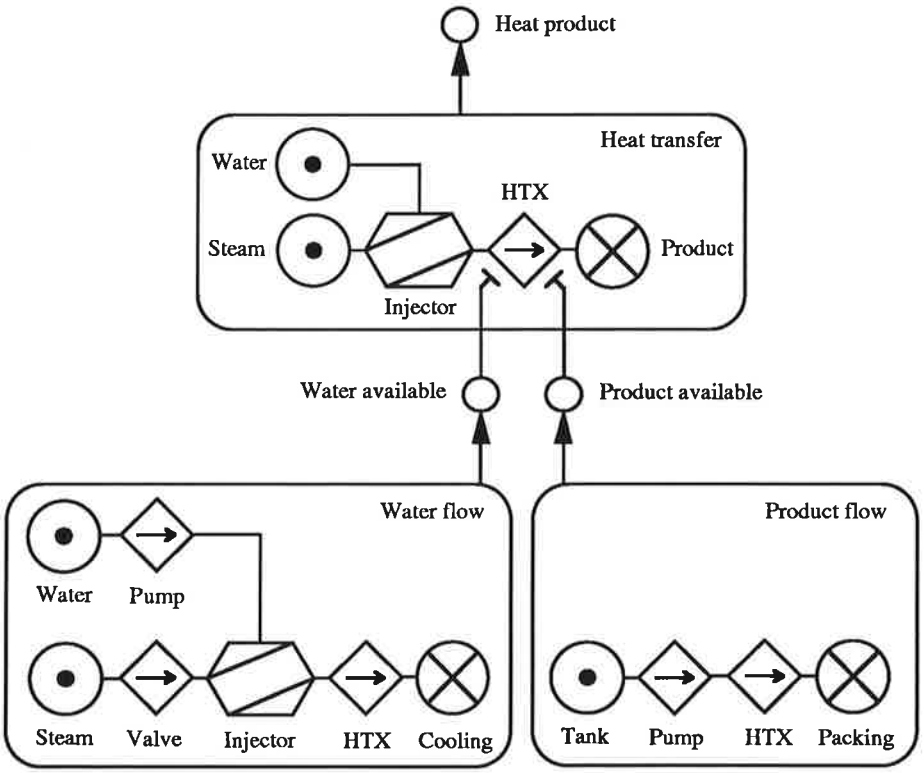

Figure 1.3 Functional view of the heat exchanger system in MFM symbology.

its functions have failed. If so, an explanation of the fault has been found. This is an example of a *causal explanations* diagnosis scheme, as used in most conventional backward chaining diagnosis systems. However, within the MFM framework the search is governed by an explicit structure and is arguably not hidden in a maze of interacting rules.

The multilevel flow modelling technique is not as yet fully developed for diagnostic applications. There are a number of unresolved issues of both a practical and theoretical nature. An important issue is the question of how the functional models should be presented to the user. It is also unclear how to merge the functional view of a system with the conventional topological view. Further work is needed to provide both the programmer and the user with a tool that enables one to readily transfer from one view to the other.

Diagnostic Model Processor

The FALCON project is probably one of the better known expert system exercises in process fault diagnosis. It was a cooperative effort between the University of Delaware, DuPont and Foxboro. The project set out to determine the feasibility of using expert system technolgy for process fault analysis (Dhurjati et al, 1987). The University of Delaware has continued research in the area of process fault diagnosis and one of their principal analysis tools is the Diagnostic Model Processor or DMP.

The process model is represented as a set of quantitative governing equations. Each equation is written in residual form; under fault free conditions the residual should equal zero. The residual has associated tolerance limits to account for measurement noise, modelling errors, etc. The residuals are transformed into a real-valued metric between -1 and +1 to indicate the degree and direction to which the equation is violated.

Associated with each equation is a set of assumptions which if satisfied, guarantee the validity of the model equation. Some of the assumptions are explicit in that they relate to the validity of variables that show up explicitly in the model equations (for example, the temperature from a temperature sensor). On the other hand, some assumptions are implicit in that they are indicators of an operating condition (for example, a flow rate dependent upon a working pump).

The satisfaction of each assumption is calculated as a weighted sum of the violation of each model equation dependent on that assumption with the weights being the sensitivities of the dependencies. This results in a number, the failure likelihood, between -1 and +1. Failure likelihoods exceeding a preset threshold are assumed to indicate a fault conditions.

In the Fall of 1989, Tom Petti of the University of Delaware applied DMP to Alfa-Laval's Steritherm process as part of ABB/Lund's IT4 Project. The objective of the IT4 Project is to define and verify a concept for knowledge-based control systems (KBCS's) that integrates conventional algorithmic programming techniques and knowledge-based techniques (Årzén, 1990). Petti's demonstration used 18 active equations and 7 inactive equations to evaluation 17 assumptions. The DMP depiction of Steritherm is illustrated in Figure 1.4. An observation is the complex nature of the network of dependencies between the model equations (rectangles) and assumptions (circles) for what is arguably a small problem . However, Petti notes that the graphics-based

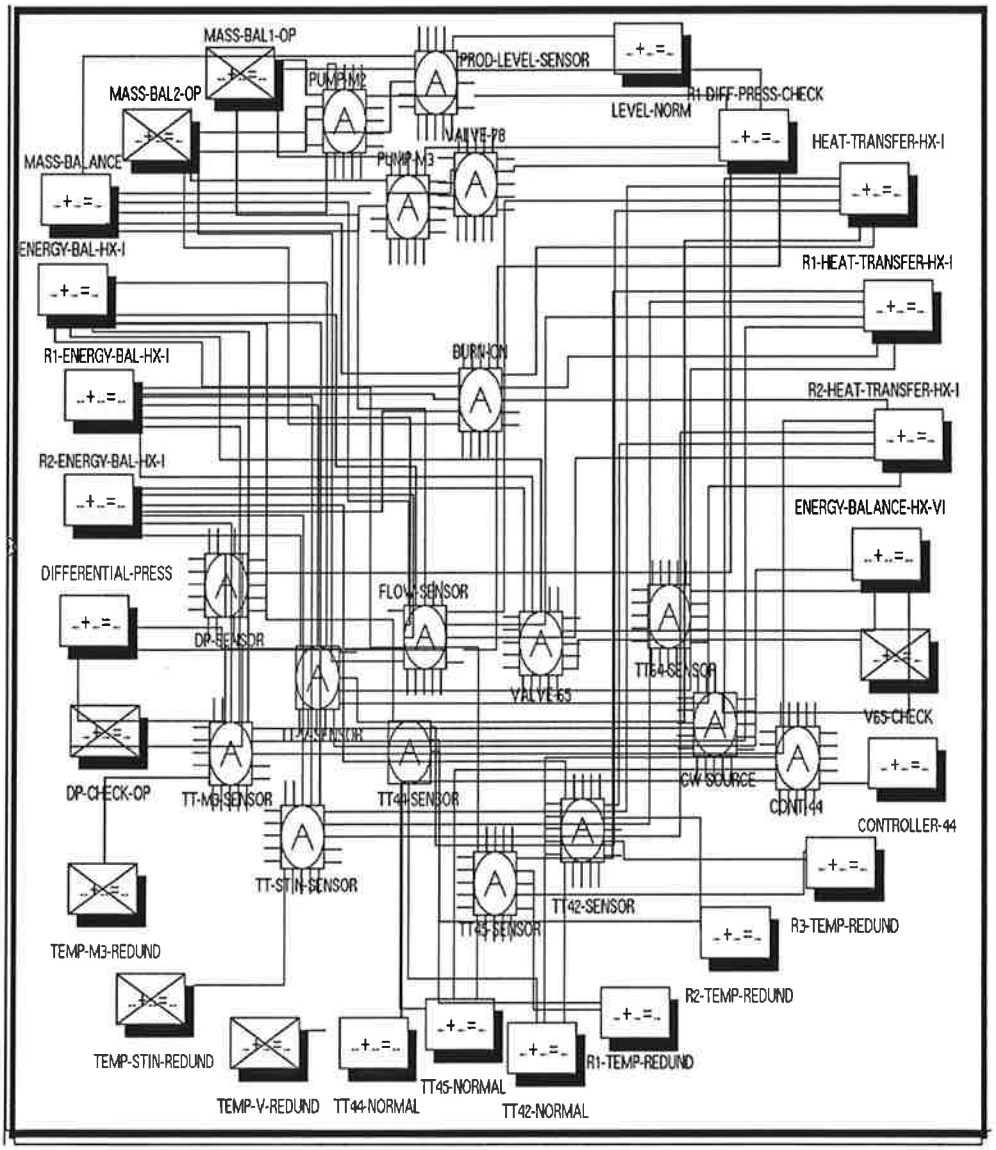

Figure 1.4 The DMP analysis of the Steritherm process

nature of G2 makes the construction of such a network relatively easy. Model equations and assumptions can be modelled as G2 objects. The relations between them, called dependencies, can be modelled as G2 connections. The underlying equations can be implemented as generic rules and formulae.

Selection of DMP

The decision was taken to use DMP in this application. This should not be viewed as a serious criticism of the EFD and MFM techniques. Halden's EFD can be viewed as a simplification of the DMP technique. Arguably its simplicity is the reason for its successful application to the Lovissa power plant. However, due the broad range of faults being examined in this thermal performance analysis application, the full functionality of DMP is required. With respect to MFM, time constraints precluded its adoption. Though MFM had already been applied to the Steritherm process, an extensive remodelling effort would have been required to adapt it to the thermal power cycle of Barsebäck. Consequently, the Diagnostic Model Processor was selected.

2. Thermal Analysis

Barsebäck is a two unit nuclear power plant with two boiling water reactors (BWR) each with a thermal rating of 1800 $MWth$ and net electrical rating of 610 MWe. The thermal power cycle is illustrated in Figure 2.1. The cycle has one stage of reheat and five stages of extraction or regeneration. There are two identical feedwater trains with five feedwater heaters (preheaters) each, though only one train is shown. Figure 2.1 shows the condenser bypass around the turbine which can carry 100 % of the reactor rated power. There is a throttle valve on the extraction line to the high pressure feedwater heater FH5.

The function of the thermal analysis component of the program is to calculate the heat and mass balance of the cycle illustrated in Figure 2.1. The analysis is conducted in three steps:

- Input the measured values of temperature, pressure and flow
- Calculate the extraction flows and theoretical generator output
- Adjust the "unknown" variables until there is a match between the theoretical and actual generator output

The differences between the current target variables (as calculated by the thermal analysis) and their optimal values (as predetermined by the User) are then used as the basis for the economic analysis.

Figure 2.2 illustrates the Data Input display screen for the program. The User can manually input a total of 91 instrument readings, though only 29 are currently used as the basis for the thermal analysis. The full set of results can then be examined by means of the display illustrated in Figure 2.3.

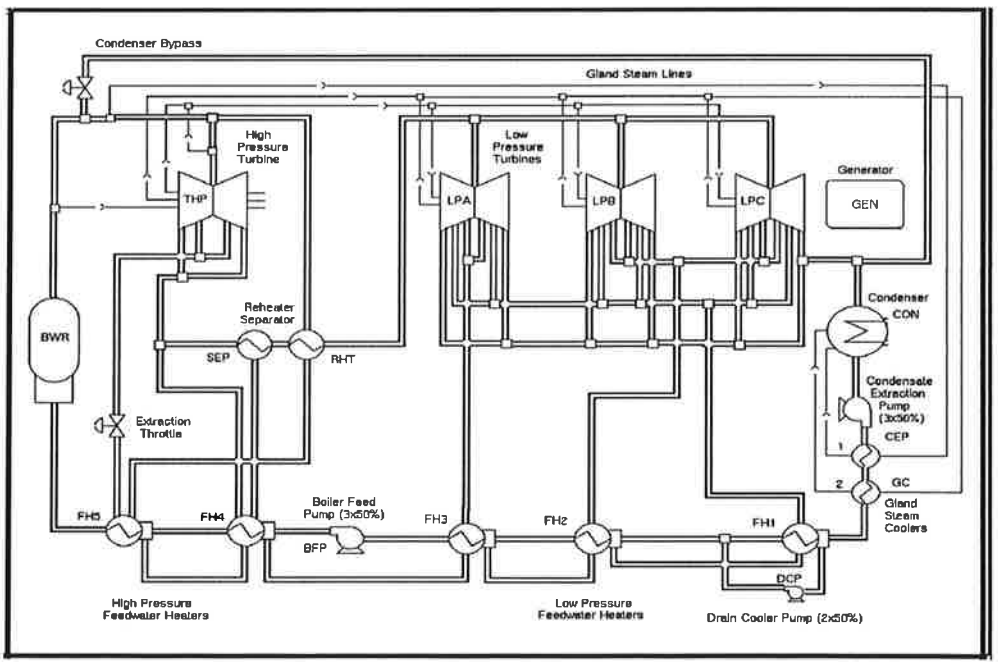

Figure 2.1 The Barsebäck thermal cycle

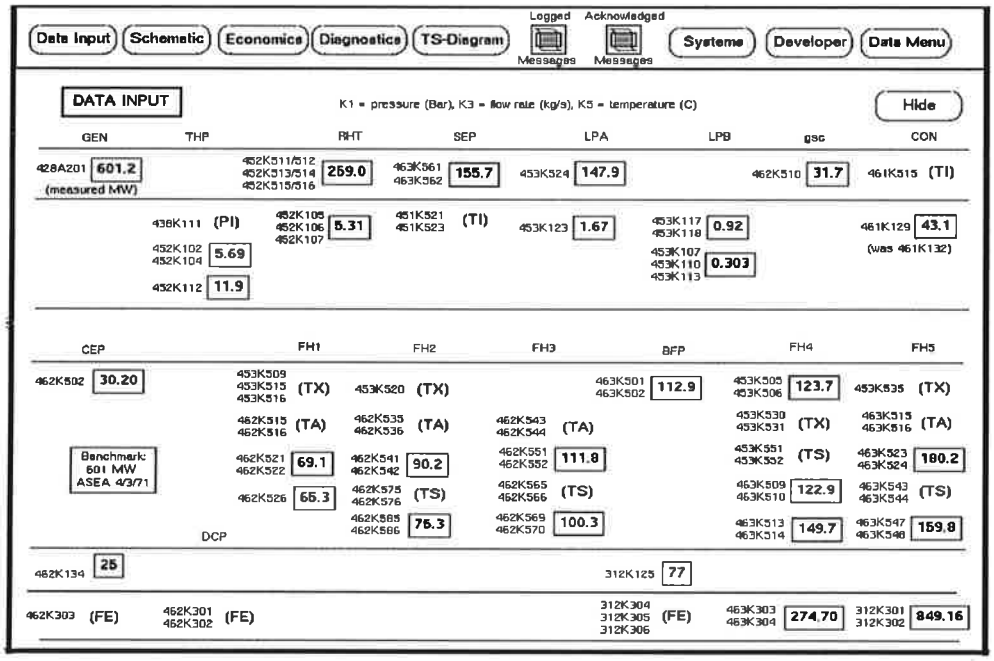

Figure 2.2 Sample set of Data Input displayed by the program.

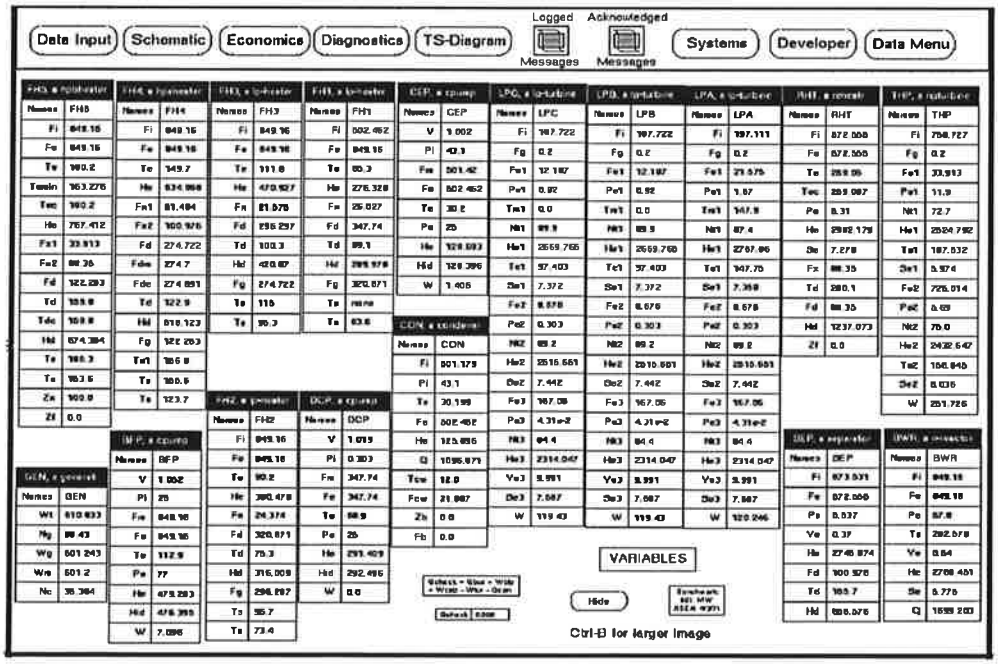

Figure 2.3 Sample set of thermal analysis results displayed by the program.

The User does not normally use the detailed display of Figure 2.3. Instead, a summary of the key results is available on the cycle Schematic display of the program as illustrated in Figure 2.4. The User can also use this Schematic display to manipulate and examine the effect of eight variables: condenser bypass valve opening, reactor steam pressure, feedwater heater FH5 extraction throttle valve opening, degree of fouling of heater FH5, degree of reheater fouling, total feedwater flow, exhaust stage efficiency of the low pressure turbines and the condenser vacuum.

The full set of available instrument data is detailed in Tables 2.1 and 2.2. Both the variable names used in the plant model as well as the full instrument number tags are given.

The instruments used by the thermal analysis are listed in Table 2.1. The table lists 55 instruments, many of which are duplicates (explicitly redundant) in that they measure the same variable. The readings from duplicate instrumentation are averaged to give a total of 29 true data points. One is referred to Appendix B for the meaning of the component and variable names as well as details on the underlying plant model.

It is important to note that the data given in Table 2.1 is not complete. Table 2.2 gives the data that is input but is *not* currently used in the thermal analysis. A total of 46 instruments are listed. After averaging the readings from duplicate instruments, the total number of true data points is 25. The division of variables between Tables 2.1 and 2.2 is an *expert* decision and is reviewed according to the results of the diagnostics analysis.

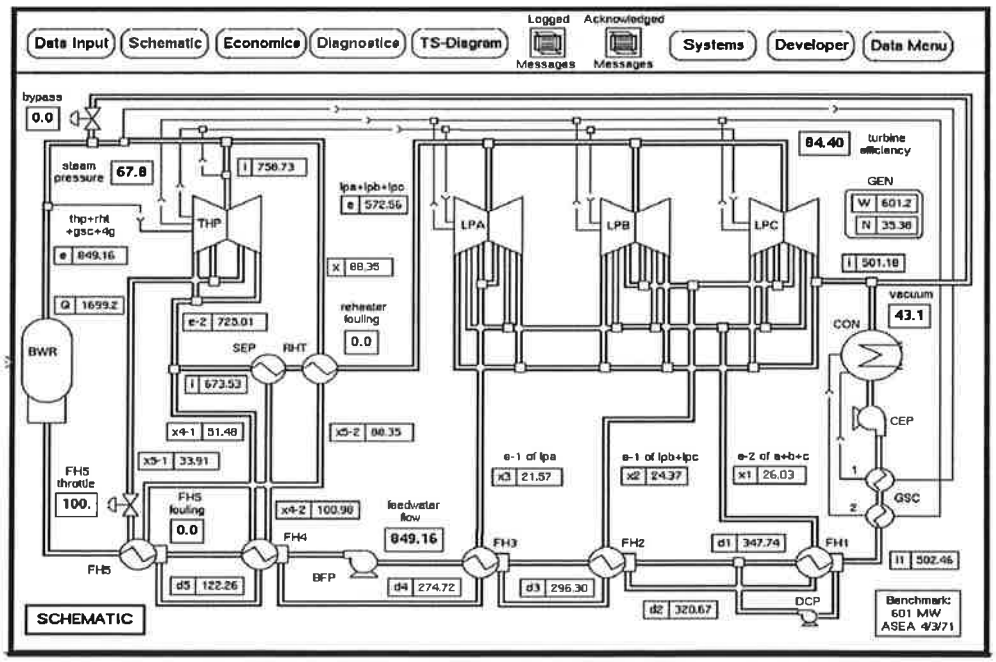

Figure 2.4 The cycle Schematic display with thermal analysis summary.

Table 2.1 Input data used for thermal analysis

Component	Name	Variable	Instrument
Reactor	BWR	PE	211K116
Feedwater Heaters	FH5	TE	463K523 463K524
			312K508 312K509
		TD	463K547 463K548
		FE	312K301 312K302
	FH4	TD	463K509 463K510
		TE	463K513 463K514
	FH3	TE	462K551 462K552
		TD	462K569 462K570
	FH2	TE	462K541 462K542
		TD	462K585 462K586
	FH1	TD	462K521 462K522
		TE	462K526
Turbines	THP	PE1	438K112
		PE2	452K102 452K104
	LPA	PE1	453K123
		TE1	453K524
	LPB	PE1	453K117 453K118
	LPC	PE2	453K107 453K110 453K113
Condenser	CON	PI	461K129
Separator	SEP	TD	463K561 463K562
Reheater	RHT	TI	451K521 451K523
		TE	452K511 452K512 462K513
			452K514 452K515 462K516
		PE	452K105 452K106 452K107
Gland Steam Cooler	GSC	TE	462K510
Condensate Pump	CEP	TE	462K502
Drain Cooler Pump	DCP		
Boiler Feed Pump	BFP	TE	463K501 463K502
		PE	312K125
		PI	462K134
Generator	GEN	WG	428A201

Table 2.2 Input data *not* used for thermal analysis

Component	Name	Variable	Instrument
Feedwater Heaters	FH5	TX1	453K535
		TA	463K515 463K516
		TS	463K543 463K544
	FH4	TX1	453K530 453K531
		TA	463K505 463K506
		TS	463K551 463K552
		FD	463K303 463K304
	FH3	TA	462K543 462K544
		TS	462K565 462K566
	FH2	TX	453K520
		TA	462K535 462K536
		TS	462K575 462K576
	FH1	TX	453K509 453K515 453K516
		TA	462K515 462K516
Turbines	THP	PI	438K111
Condenser	CON	TWI	472K001
		TWE	472K006
		TI	461K515
		TE	461K514.2
Reheater	RHT	TD	463K557 463K558
			463K559 463K560
Drain Cooler Pump	DCP	FE	462K301 462K302
		PI	462K140 462K141
		PE	462K113 462K114
Condensate Pump	CEP	FE	462K303
Boiler Feed Pump	BFP	FI	312K304 312K305 312K306

2.1 Model Verification

To verify the model, a comparision was made to two cycle analyses conducted by ASEA. They will be referred to as the "Benchmark" and "Uprated" cases. Table 2.3 compares the results from ASEA and BARSE for the Benchmark case. This case is taken from the plant's original design data that dates from April of 1971. The Benchmark case is for a power output 601.2 MW with a feedwater flow of 849.16 kg/s.

Table 2.3 Benchmark case results.

Variable	Name	ASEA	BARSE	Error (%)
extraction flows	$FX1_{fh5}$	34.26	33.91	-1.02
	$FX2_{fh5}$	88.50	88.35	-0.17
(kg/s)	$FX1_{fh4}$	52.10	51.48	-1.19
	$FX2_{fh4}$	100.78	100.98	-0.20
	FX_{fh3}	21.55	21.57	-0.09
	FX_{fh2}	24.61	24.37	-0.98
	FX_{fh1}	25.94	26.03	-0.35
condenser inlet flow	FI_{con}	500.14	501.18	+0.21
reheater outlet flow	FE_{rht}	672.36	673.35	+0.15

Table 2.4 compares the results from ASEA and BARSE for the Uprated case. This case is taken after the plant was shutdown for a rebuild of the HP turbine to enable a higher rated reactor power. It dates from April of 1986. The Uprated case is for a gross output 622.2 MW and a feedwater flow of 904.53 kg/s. The discrepancies observed in Tables 2.4 and 2.5 can be attributed to the different property routines employed by the two programs. The majority of errors are less than 1%.

Table 2.4 Uprated case results

Variable	Name	ASEA	BARSE	Error (%)
extraction flows	$FX1_{fh5}$	40.05	39.74	-0.77
	$FX2_{fh5}$	85.98	86.18	-0.23
(kg/s)	$FX1_{fh4}$	57.21	56.65	-0.98
	$FX2_{fh4}$	106.01	106.50	+0.46
	FX_{fh3}	24.77	24.52	-1.01
	FX_{fh2}	32.70	32.67	-0.09
	FX_{fh1}	21.29	21.18	-0.52
condenser inlet flow	FI_{con}	534.81	535.57	+0.14
reheater outlet flow	FE_{rht}	611.95	613.14	+0.19

2.2 Discussion

A number of important parameters are not directly measured and must be "guessed" by the User until there is a match between the actual and theoretical output of the generator. These parameters are given in Table 2.5. These parameters represent the principal weakness in the analysis and are the result of the lack of instrumentation in the process. Ideally, parameters such as the moisture content of the steam at the reactor output should be measured. This is not to say that the analysis is without merit.

Inspection of Table 2.5 reveals an *apparent* drop in the exhaust stage efficiency of all three the low pressure turbine (NT3 of LPA, LPB and LPC). The change from 84.4 to 80.7 % results in a drop in gross cycle efficiency of 0.86 % or 20 MW. One assumes that this was a decision on the part of ASEA based upon a change in inlet steam conditions and the age of the turbine. The lack of a formal turbine model within BARSE precludes a more conclusive answer. However, the role of a program such as BARSE is to highlight such changes to direct the need for further analysis.

Though there are changes in all the turbine stage efficiencies, it is the exhaust stages of the low pressure turbines that have the greatest impact. The final observation from Table 2.5 is the significant change in the moisture content of the steam from the reactor (YE of BWR). The decision by ASEA to drop its value from 0.54 to 0.12 % is assumed to be due to an opinion that the efficiency of the moisture separator in the reactor had improved.

Analysis of the current plant operating conditions reveals that there is a lack of superheat on the first extraction of low pressure turbine LPA (there

Table 2.5 "Unknown" parameters

Parameter	Component	Variable	Benchmark	Uprated	Change
generator efficiency	GEN	NG	98.43	97.93	-0.5 %
turbine efficiencies	THP	NT1	72.7	71.8	-1.2
	THP	NT2	75.0	75.3	+0.4
(%)	LPA	NT1	87.4	85.9	-1.7
	LPA	NT2	89.9	86.2	-4.1
	LPB	NT2	89.2	81.6	-8.5
	LPC	NT3	84.4	80.7	-4.4
moisture content	BWR	YE	0.54	0.12	-78.
(%)	SEP	YE	0.37	0.39	<0.1
gland steam flow	THP	FG	0.2	0.2	0.0
(kg/s)	LPA	FG	0.2	0.2	0.0
	LPB	FG	0.2	0.2	0.0
	LPC	FG	0.2	0.2	0.0
	GSC	FX1	0.96	0.96	0.0
gland steam drain temperature ($°C$)	GSC	TD	70.0	70.0	0.0

should be 33^oC of superheat, currently the steam is saturated). The effect of this is to increase the output of the cycle and consequently raise the cycle efficiency (more work is being extracted from the steam). However, the increased moisture content in the exhaust will lead to accelerated erosion within the turbine. Again, an explanation of why there is a lack of superheat is not possible. The significance is that a possible problem has been identified.

Finally, a further benefit of the thermal analysis is the review that must be conducted of the plant data base. During the course of compiling the instruments listed in Tables 2.1 and 2.2 a number of missing and incorrectly located instruments were identified. For example, instrument 462K303 is located at the exit of the condensate pump and not at the exit of the gland steam coolers as shown on the plant instrument diagram. As a second example, instruments 312K301/312K302 are located at the exit of heater FH5 and not at the exit of the boiler feed pumps. In the search for more data, the existence of field instrumentation was "rediscovered" (for example, the true feedwater exit temperatures of heater FH1, 462K515/462K516 and the shell temperatures of heater FH4, 463K551/463K552). The lack of knowledge within the plant is also highlighted. For example, the exact location of the temperature and pressure sensors on the steam extraction lines could not be determined. This information is needed to ensure accurate estimation of extraction steam conditions.

2.3 Future Work

There are a number of areas where the thermal analysis component of the program could be expanded and improved upon. Future modelling efforts should focus on the development of a formal turbine model, as this component has the greatest impact on the accuracy of the overall results.

Steam Properties

The steam property routines employed in the program were adopted because of their availability. Their accuracy is on the order of only ± 0.1 %. Routines with an accuracy on the order of ± 0.001 % should be adopted.

Turbine Model

The turbine stage expansion efficiencies as a function of load and steam conditions are needed to better predict the extraction steam conditions. This requires a formal model of the turbine.

Feedwater Heater Model

A formal thermal model of the feedwater heater should be developed that takes into account the change in the rate of heat transfer due to a change in the feedwater flow rate.

Miscellaneous Improvements

The work of the drain cooler pumps is not currently modelled. The thermal losses associated with the gland steam within the turbine are not currently modelled. A formal model of the turbine-generator mechanical efficiency should also be added at some point.

On-Line Data Acquisition

If the system is put on-line in the future, averaging of the data could be done by the program. Currently, it is done by the User prior to manual input.

Tuning of Unknown Parameters

Ultimately, the manipulation or "tuning" of the unknown variables should be performed by the program automatically. Currently, it is performed as an *expert* decision on the part of the User. As experience with the program is gained, it should be possible to compile a set of rules for this function.

3. Economic Analysis

The economic impact of six target variables was studied: condenser bypass opening, low pressure turbine last stage efficiency, condenser vacuum, reactor steam pressure, feedwater heater FH5 fouling and FH5 extraction throttle valve opening. The impact of the six variables on gross cycle efficiency is illustrated in Figure 3.1. The data points were obtained from the thermal analysis. The dotted lines are linear curve fits to the data points. The variables are fully defined in Appendix B.

For the condenser bypass, the efficiency penalty can be given as:

$$EP^{B}_{cst} = -0.260\ ZB_{con} \tag{3.1}$$

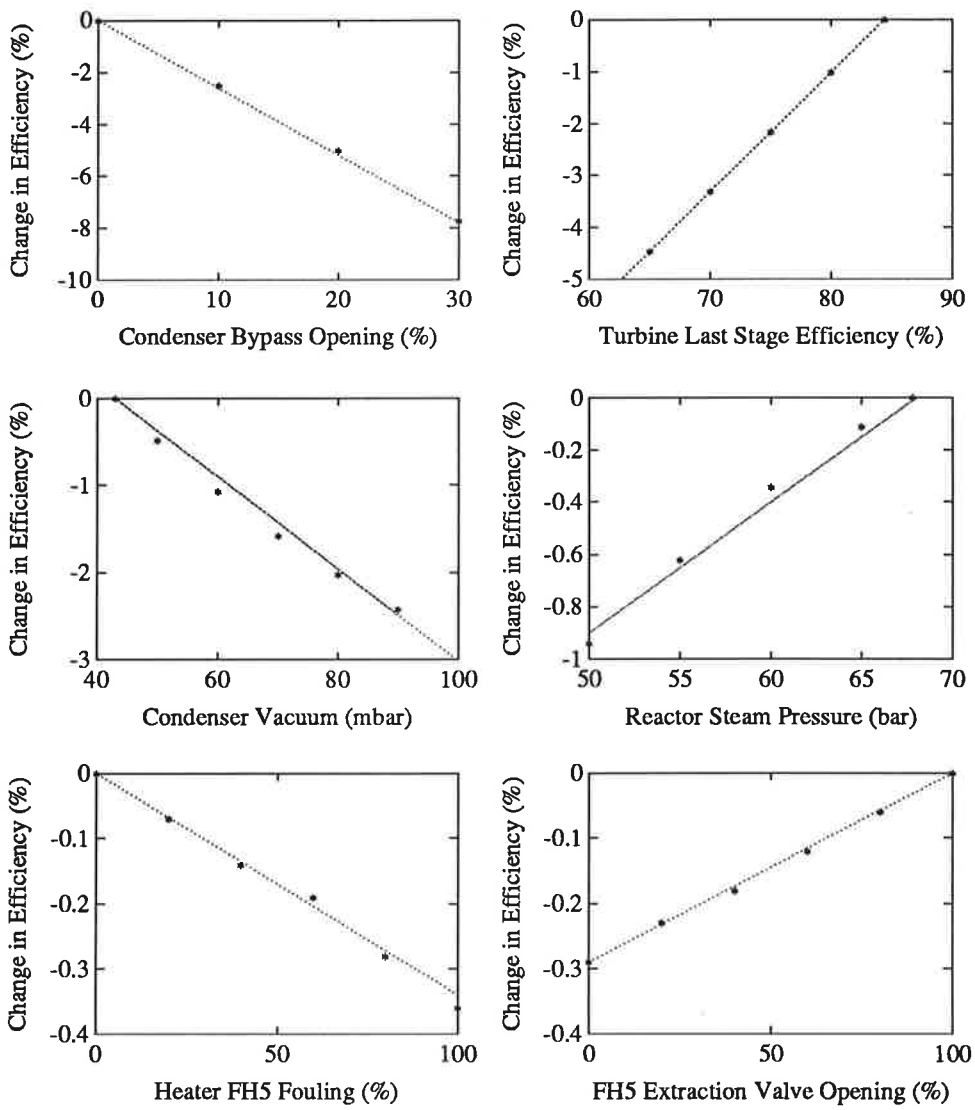

Figure 3.1 Curve fits for the economic analysis.

For the LP turbine last stage efficiency:

$$EP^{T}_{cst} = -0.230\ (84.4 - NT3_{lpc}) \tag{3.2}$$

For the condenser vacuum:

$$EP^{V}_{cst} = -0.053\ (PI_{con} - 43.0) \tag{3.3}$$

For the reactor steam pressure:

$$EP^{E}_{cst} = -0.050\ (68.0 - PE_{bwr}) \tag{3.4}$$

For the throttle valve opening of feedwater heater FH5:

$$EP^{X}_{cst} = -0.0029\ (100 - ZX_{fh5}) \tag{3.5}$$

For the fouling of feedwater heater FH5:

$$EP^{F}_{cst} = -0.0034\ ZF_{fh5} \tag{3.6}$$

The economic impact of the change in efficiency can be calculated as a daily cost ($kSEK/day$):

$$DC^{i}_{cst} = 240\ EP^{i}_{cst}\ Q_{bwr}\ FC_{cst} \qquad for\ i = B,\ T,\ V,\ E,\ X,\ and\ F \tag{3.7}$$

where Q_{bwr} is the reactor thermal power output (MW) and FC_{cst} is the operating cost (SEK/MWh).

The annual cost ($kSEK/year$) is given by:

$$AC^{i}_{cst} = 3.65\ DC^{i}_{cst}\ LF_{cst} \qquad for\ i = B,\ T,\ V,\ E,\ X,\ and\ F \tag{3.8}$$

where LF_{cst} is the percentage annual load factor.

Inspection of Figure 3.1 reveals the relative impact of the target variables. As expected, the condenser bypass valve opening has the greatest impact. Realistic deviations in the turbine last stage efficiency can lower the gross cycle efficiency by as much as 5 %. By contrast, any fouling of feedwater heater FH5 will lower the cycle efficiency by "only" 0.4 %. This should not be interpreted to mean that the fouling of a feedwater heater can be ignored. A 0.1% drop in gross cycle efficiency represents an annual cost of over 1.9 *million SEK* (380,000 $CAN\$$).

What Figure 3.1 does not reveal is the impact of the target variables on unit electrical output. For example, though the fouling of feedwater heater FH5 will lower cycle efficiency, it will also *raise* unit output by as much as 15 MW. The throttling of the extraction line to FH5 has the same effect. This is of course the reason for the extraction throttle; the throttle is closed when one wishes to increase unit output in times of high demand. The program can be used to highlight that this cannot be done without a negative impact on unit economic and thermal performance.

3.1 Sample Results

The economics analysis defined by equations (3.1) to (3.8) was applied to two sets of data: 1) the ASEA Uprated data set and 2) a set of field data taken from the plant in February of 1990. The former is referred to as the "Uprated" case as before. The latter is referred to as the "Recent" case. The results for the Uprated case are given in Figure 3.2. The results for the Recent case are given in Figure 3.3. The efficiency of the Benchmark case (35.38 %) is taken as the optimum.

Both figures serve to illustrate the Economics screen of the program which summarizes the daily and annual cost of non-optimum values for the target variables. If the economic analysis is complete, the sum of the daily costs for the six target variables should add up to the daily cost of any deviation in the *gross efficiency* from its optimal value (as given by the meter on the left side of the display).

Figure 3.2 illustrates the significant impact (55.1 $kSEK/day$) of the off-target value for the LP turbine efficiency that was the subject of discussion in Section 2.2. When added to the negative impact of the lower than optimal condenser vacuum (6.6 $kSEK/day$) and the positive impact of the higher than optimal reactor steam pressure (7.5 $kSEK/day$) one gets a total impact of 54.2 $kSEK/day$ from these three factors. This compares relatively well with the 53.0 $kSEK/day$ cost of the off-target value for the gross cycle efficiency.

Figure 3.3 illustrates a case where the sum of the costs of the target variables does *not* add up to the cost of the off-target value for the gross cycle efficiency. The sum of the six individual costs is 88.6 $kSEK/day$. The gross cycle efficiency cost is 100.1 $kSEK/day$. Thus, there are unidentified costs on the order of 11.5 $kSEK/day$. This serves to clearly identify a direction for future work; namely increase the number of target variables until the shortfall in such examples is eliminated.

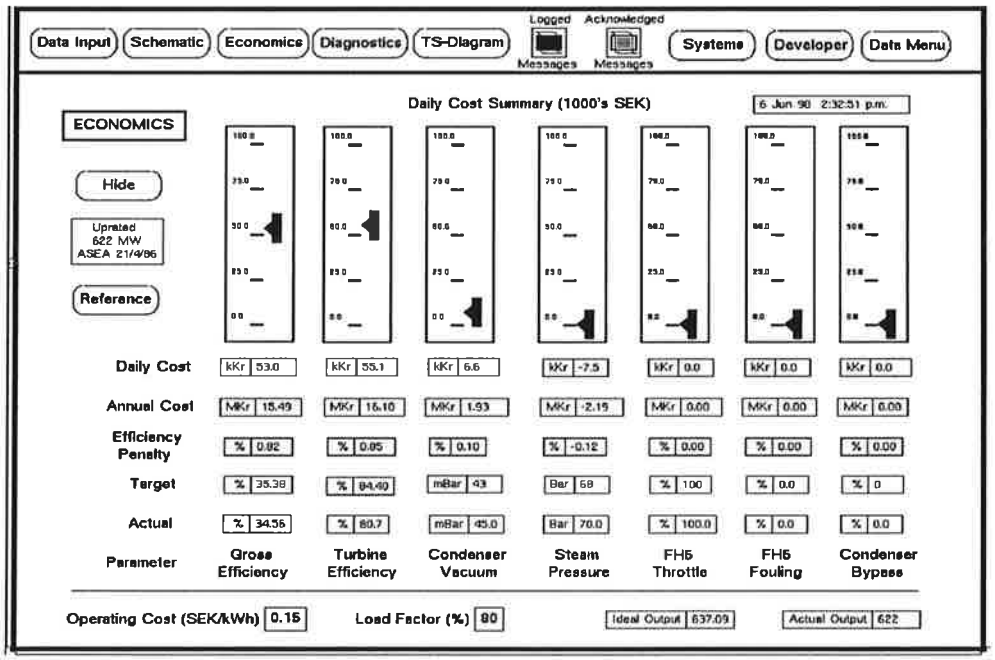

Figure 3.2 Economic analysis display for the Uprated case.

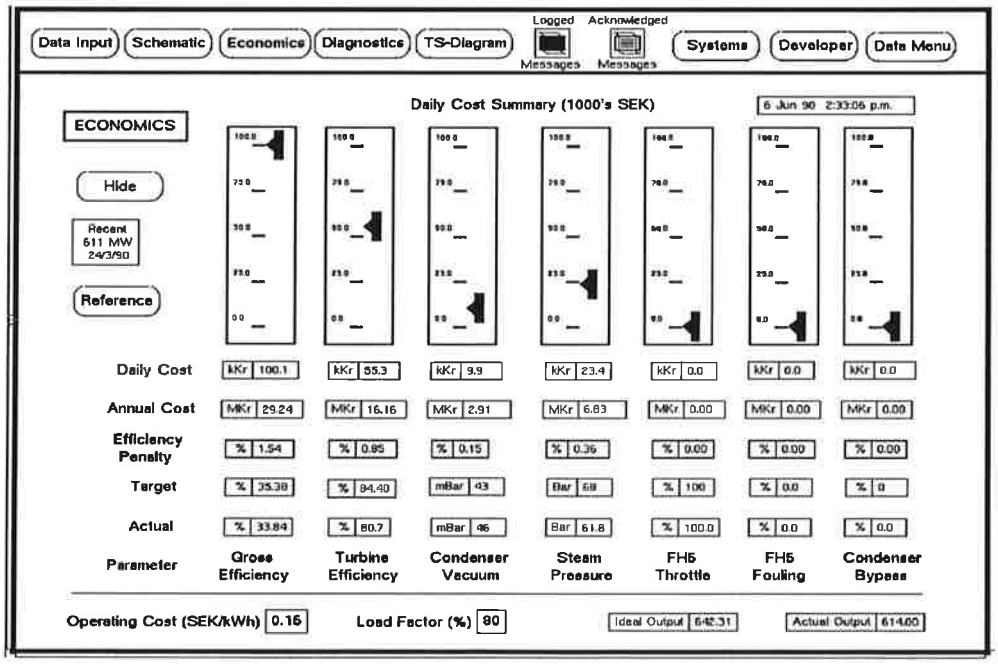

Figure 3.3 Economic analysis display for the Recent case.

3.2 Discussion

The simple approach taken for the economic analysis requires that the results be used with caution. No allowance has been made in the analysis for the following factors:

- o Uncontrolled nature of the target variables
- o Mechanical cost of non-optimal target variables
- o Dependent nature of the target variables on each other
- o Dependent nature of the target variables on unit load

As with the thermal analysis, the above factors which are interpreted as weaknesses in the economic analysis should not lead one to the conclusion that the analysis has no value. Though the economic analysis must be developed further before it can provide sufficient detail to the operator that he can actually take corrective action, the fact that it can point to possible problem areas is of value.

The best example of the uncontrolled nature of the target variables is that of the condenser vacuum. The operating pressure of the condenser may be high due to a high seasonal cooling water inlet temperature. As another example, the steam pressure may be low due to operating requirements for the reactor. However, this does not mean that providing the operator with a "High Condenser Vacuum" message has no value. Reminding the operator of those variables that impact on efficiency has its role even if no corrective action can be taken. In addition, there may in fact be a possible corrective action. Condenser tube leaks and air ingress can also cause higher than optimal condenser vacuum. The operator needs to be reminded of these facts.

Though it was not used as one of the target variables, the impact of reheater fouling is a good example of the need to take into account the mechanical cost of certain variables. It is easy to recognize that fouling of the reheater will reduce the degree of superheat of the supply steam to the low pressure turbines. What is less obvious is that reheater fouling will also increase the unit output and *increase* the gross cycle effiency. From a strictly theoretical viewpoint, a thermal cycle of the type at Barsebäck should not employ reheat. This ignores the fact that the purpose of reheat is to reduce the moisture content of the steam in the *exhaust* of the lower pressure turbines. A higher moisture content will lead to accelerated erosion of the low pressure turbine blades and in the long term increase operating costs. Thus, a comprehensive economic analysis should take into account both thermal and mechanical effects.

The economic analysis assumes that the impact of the target variable is independent of each other as well as independent of unit load. This assumption is fine as a first approximation; but it must be recognized as an approximation. As a case in point, the "optimum" cycle efficiency is a nonlinear function of the unit load; it drops by about 0.2 % from full to half load. With a little more work this and similar effects could be factored into the economic analysis.

3.3 Future Work

One of the roles of the thermal analysis at this stage in the development of the program was to generate the equations for the economic analysis. In order to provide a more useable economic analysis, future work should focus on two items: 1) modification of existing equations to recognize the "uncontrollable" nature of certain parameters and 2) development of a better set of cost relationships. To be meaningful, such work must be linked with the development of a better turbine model for the thermal analysis.

Accounting for Uncontrollables

The economic analysis should take into account the fact that the operator has no control over certain parameters. For example, a relationship should be included that adjusts the condenser vacuum target as a function of the measured cooling water temperature.

Better Relationships

The dependent nature of the target variables must be taken into account. A multivariable regression routine could be used with the existing analysis to generate a set of dependent nonlinear economic equations. New relationships such as a change in the optimal cycle efficiency as a function of the unit load need to be added.

More Relationships

The fact that not all of the relevant target variables have been identified was the subject of discussion in Section 3.2. As a first step, the entire set of turbine efficiencies and the entire set of feedwater heater fouling factors should be included as target variables.

4. Diagnostic Analysis

The Diagnostic Model Process (DMP) documented by Petti et al (1990) is used to perform representative diagnostics for the program. DMP is a method of using deep or model-based evidence to arrive at the most likely fault conditions of a process. The method was invented to rectify some of the problems associated with shallow or rule-based knowledge-based systems. These problems include lack of generality, poor handling of novel situations, and the tendency to fail suddenly. The main problem addressed by DMP is that of generality. Traditional knowledge bases become invalid in the event that the target process undergoes a change. It is also difficult to apply the knowledge-base to other processes. It is therefore desirable to structure the fault analyzer such that the process specific knowledge (the model) is maintained separate from the task specific knowledge (the methodology).

The method works under the premise that during fault free operation, the actual process and process model equations should produce similar outputs when driven by the same inputs. By examining the direction and *extent* to which each model equation is violated and by considering the assumptions on which they depend, the most likely failure assumptions (faults) can be deduced. Redundancy in the system leads to better performance because an assumption which is common to many violated equations is strongly suspect; whereas satisfaction of equations provides evidence that the associated assumptions are valid. The formulation of the process model is very important to ensure the success of the analyzer. Care must be taken to include all the applicable assumptions otherwise DMP will not provide the correct diagnosis. Multiple faults are considered possible and the algorithm uses a sensitivity value to weight model equations as evidence. Finally it cannot be over-emphasized that a technique such as DMP is wholely dependent upon the process instrumentation; model equations which require unavailable measurements cannot be used.

4.1 Theory of DMP

The basic DMP procedure requires one to assemble a set of governing equations and supporting assumptions for the process under review. One then calculates the residuals and satisfaction values of each equation in order to obtain the failure likelihoods of the assumptions. A generic formula for the residual of an equation can be stated as:

$$e_j = c_j(P; A_i) \tag{4.1}$$

where P is the data vector, A is a set of assumption vectors and c is the set of equations. The satisfaction value can then be calculated as:

$$sf_j = \text{sign}(e_j)\ \frac{(e_j/\tau_j)^n}{1 + (e_j/\tau_j)^n} \tag{4.2}$$

where the tolerances (τ) can be nonlinear. Typically one sets $\tau = \tau_H$ for $e > 0$ and $\tau = \tau_L$ for $e < 0$. The sigmoidal shape of equation (4.2) is illustrated in Figure 4.1. The steepness n is usually set to 4.

The sensitivity of an equation is calculated as:

$$S_{ji} = \frac{\partial c_j / \partial a_i}{|\tau_j|} \tag{4.3}$$

The partial $\partial c_j / \partial a_i$ is referred to as the *ith* dependency of the *jth* equation. Most dependencies are explicit, except for those that are a function of the operating condition. For example, the dependence of a temperature on a working temperature sensor is explicit. Whereas, the dependence of a flow rate on a working pump is implicit. By convention, the partials are set equal to +1 for positive implicit, -1 for negative implicit and 0 for independent.

Finally, the failure likelihood of an assumption is calculated as:

$$F_i = \frac{\sum_{j=1}^{N} (S_{ji}\ sf_j)}{\sum_{j=1}^{N} |S_{ji}|} \tag{4.4}$$

where N is the total number of equations. An alarm condition is identified if $|F| > 0.5$; this will be referred to in this report as a *likely* failure. A fault condition is identified if $|F| > 0.8$; this will be referred to in this report as a *certain* failure. One notes that the direction of a failure is given by the sign of the failure likelihood.

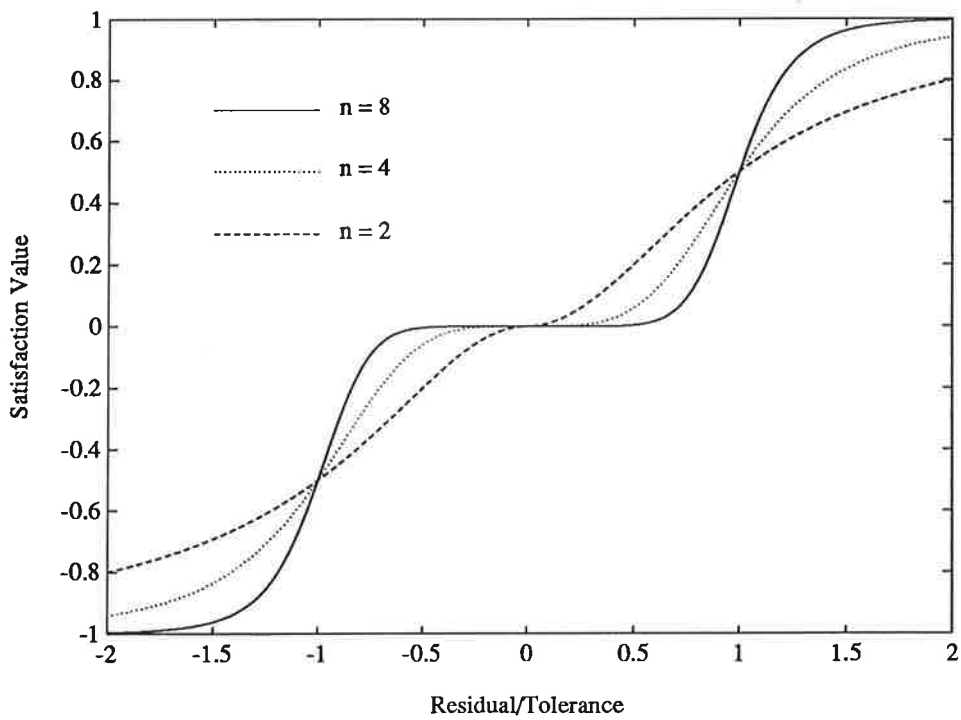

Figure 4.1 Sigmoidal function employed by DMP.

4.2 Sample Applications

Two examples will be reviewed in detail. The first example deals with flow sensor diagnostics for the feedwater system . The second example deals with diagnostics of an individual feedwater heater.

Feedwater Flow Diagnostics

The feedwater flow rate at Barsebäck can be considered to be "measured" at four points: after the high pressure feedwater heaters (F4), after the boiler feed pumps (F3), before the boiler feed pumps (F2) and after the first low pressure feedheater (F1). The sensor F1 is actually the sum of three measurements, F2 the sum of two measurements and F4 the sum of two measurements. A typical data set taken with the unit at constant load over a two hour period is illustrated in Figure 4.2. One observes that the noise level is on the order of ± 10 kg/s (shown as dashed lines about the dotted average in the figure). Furthermore, the average values all agree with the "correct" value of 900 kg/s with the exception of F2. Thus, by inspection one concludes that sensor F2 has failed and should not be used within the thermal analysis.

To analysis the data set given in Figure 4.2, one writes the following set of six equations:

$$c_a: \quad e_a = F4 - F3, \quad where\ \tau_h = -\tau_l = 10$$

$$c_b: \quad e_b = F4 - F2, \quad where\ \tau_h = -\tau_l = 10$$

$$c_c: \quad e_c = F4 - F1, \quad where\ \tau_h = -\tau_l = 10$$

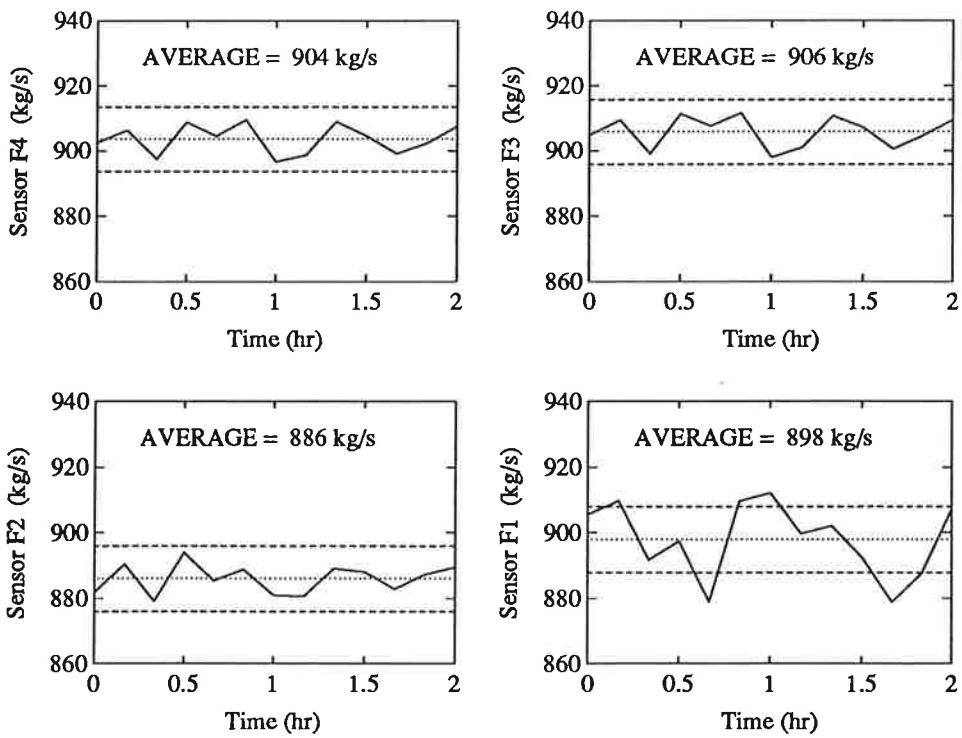

Figure 4.2 Data set used for the flow diagnostics example (10 min sampling).

$$c_d: \quad e_d = F3 - F2, \quad where\ \tau_h = -\tau_l = 10$$
$$c_e: \quad e_e = F3 - F1, \quad where\ \tau_h = -\tau_l = 10$$
$$c_f: \quad e_f = F2 - F1, \quad where\ \tau_h = -\tau_l = 10$$

and the assumptions to be considered are:

$$a = \begin{pmatrix} F4\ is\ OK \\ F3\ is\ OK \\ F2\ is\ OK \\ F1\ is\ OK \\ no\ HP\ leak \\ no\ LP\ leak \end{pmatrix}$$

The DMP network corresponding to this set of six equations and six assumptions is illustrated in Figure 4.3. One should note the nature of the dependencies; that is the connections drawn between the equations and the assumptions. The validity of equations (a), (b) and (c) requires that there be no HP (high pressure) leak; the partial derivative is implicitly -1 (a HP leak would lower the value of F4 only). The validity of equations (c), (e) and (f) requires that there be no LP (low pressure) leak; the partial derivative is again implicitly -1 (a LP leak would lower the values of F4, F3 and F2). The validity of equation (d) is not dependent upon the assumptions of no LP leak and no HP leak.

Given average sensor values of 903.6, 905.8, 885.9 and 897.9 kg/s for F4, F3, F2 and F1, respectively, equation (4.1) (that is the above set of six equations) and equation (4.2) with n = 4, the vector of residuals becomes:

$$e = \begin{pmatrix} -2.2 & 17.7 & 5.7 & 19.9 & 7.9 & -12.0 \end{pmatrix}^T$$

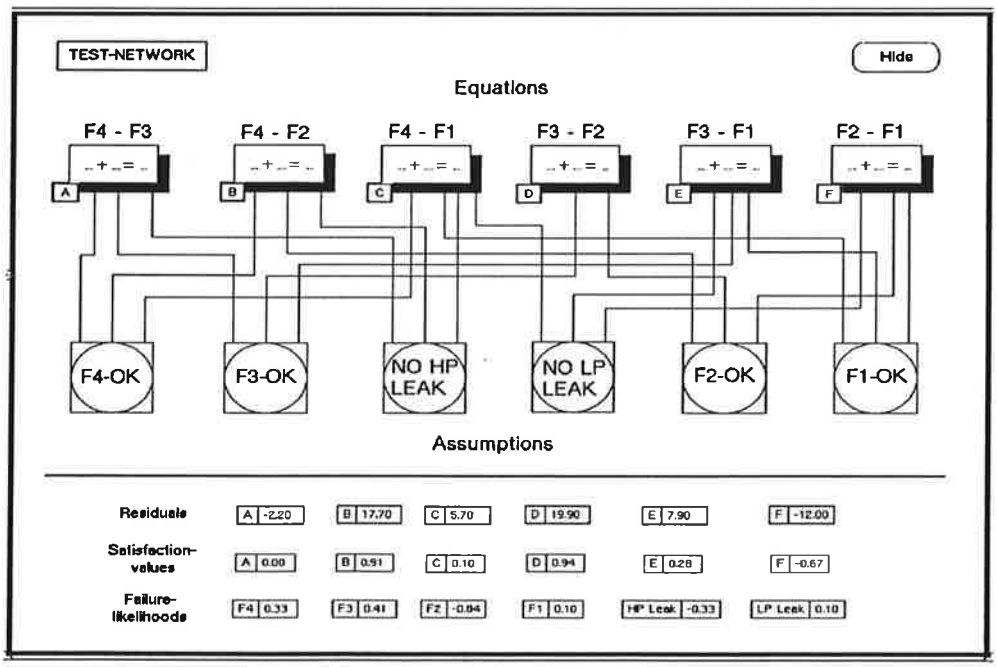

Figure 4.3 DMP network constructed for the flow diagnostics example.

and the satisfaction value vector sf is calculated as:

$$sf = \begin{pmatrix} 0.00 & 0.91 & 0.10 & 0.94 & 0.28 & -0.67 \end{pmatrix}^T$$

The partial derivatives of the equations with respect to the "sensor is OK" assumption are all constant so that the sensitivity matrix S is calculated using equation (4.3) as:

$$S = \begin{pmatrix} 0.1 & -0.1 & 0 & 0 & -0.1 & 0 \\ 0.1 & 0 & -0.1 & 0 & -0.1 & 0 \\ 0.1 & 0 & 0 & -0.1 & -0.1 & -0.1 \\ 0 & 0.1 & -0.1 & 0 & 0 & 0 \\ 0 & 0.1 & 0 & -0.1 & 0 & -0.1 \\ 0 & 0 & 0.1 & -0.1 & 0 & -0.1 \end{pmatrix}$$

From this sensitivity matrix one observes that these equations are not linearly independent; however, the high degree of redundancy is required to ensure the success of the diagnosis.

Finally, equation (4.4) yields the following failure likelihoods:

$$F = \begin{pmatrix} 0.33 & 0.41 & -0.84 & 0.10 & -0.33 & 0.10 \end{pmatrix}$$

The first observation is that none of the failure likelihoods are zero. The second observation is that only one failure likelihood is greater than 0.8; that is the F of the *F2 OK* assumption is -0.84. The conclusion is that sensor F2 has failed low, as expected.

Figure 4.4 shows the result as it would appear within the program. Note that the residuals, satisfaction values and failure likelihoods are given at the

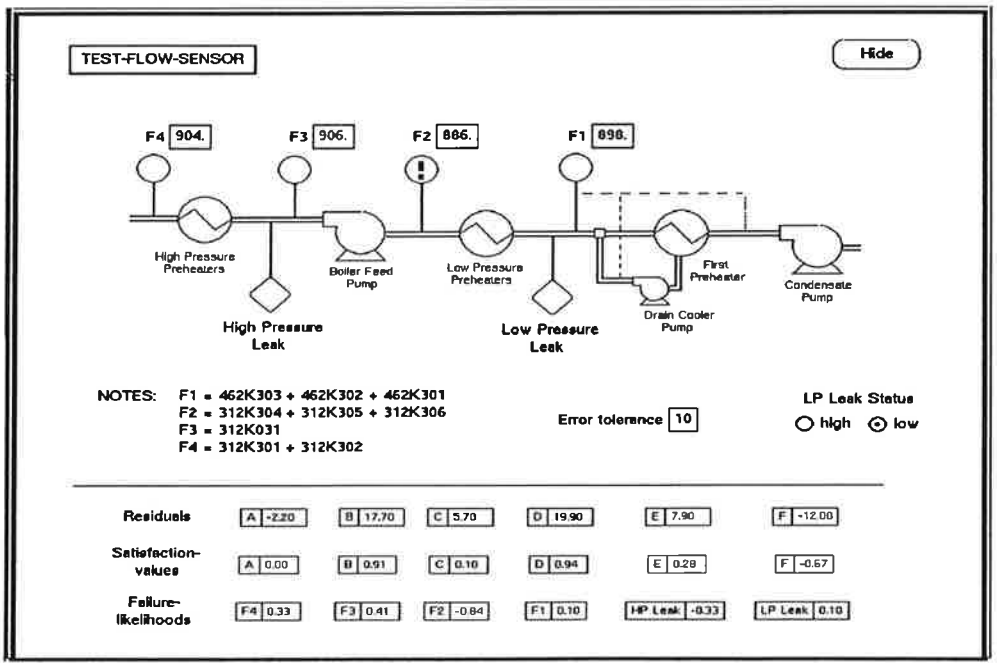

Figure 4.4 DMP summary display for sensor F2 failure example .

bottom of the display. The *certain* failure of sensor F2 is indicated to the User as a *solid* exclamation mark on the sensor icon.

The value of the DMP technique is best illustrated by considering the effect of LP and HP leaks. These two tube leak examples will illustrate the need for additional instrumentation as well as situations where the fault discrimination capability of DMP is poor.

A high pressure leak can be simulated by reducing the value of F4 by 50 kg/s (from 904 to 854 kg/s). If this is done, the failure likelihoods become:

$$F = \begin{pmatrix} -1.0 & 0.74 & -0.21 & 0.46 & 1.0 & 0.46 \end{pmatrix}$$

Figure 4.5 shows the result as it would appear within the program.

The first observation is that the F of the *NO HP LEAK* assumption is 1.0, consistent with the expected result of a high pressure leak. However, the second observation is that the F of the *F4-OK* assumption is -1.0. Given the lack of redundancy in the measurement of the feedwater flow after the assumed location of a high pressure leak, DMP correctly points out that the new data set is consistent with both types of failure. Both *certain* failures are indicated in Figure 4.5 as solid exclamation marks. A third observation is that a side-effect of the HP leak fault is that the F of the *F3-OK* assumption drops down to 0.74; this assumption is now considered only a *likely* failure and this is indicated in the figure as an *open* exclamation mark.

Unlike the previous sensor fault example, the three observations made by DMP for the HP leak fault example cannot be considered intuitively obvious. The only way to improve fault discrimination in this example is to provide a second independent measurement of the feedwater flow after the HP heaters.

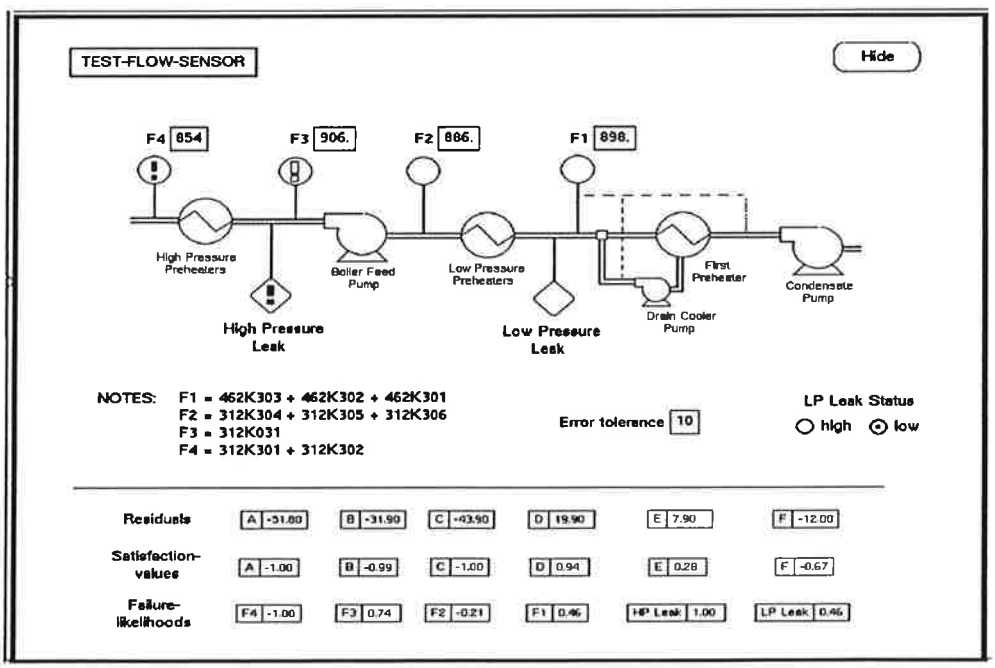

Figure 4.5 DMP summary display for high pressure leak example.

As a further illustration, a low pressure leak can be simulated by reducing the values of F4, F3 and F2 by 50 kg/s (to 854, 856 and 836 kg/s, respectively). If this is done the failure likelihoods become:

$$F = \begin{pmatrix} -0.03 & -0.02 & -0.96 & 1.00 & 0.03 & 1.00 \end{pmatrix}$$

Figure 4.6 shows the result as it would appear within the program.

The first observation is that the F of the *NO LP LEAK* assumption is 1.0, consistent with the expected result of a low pressure leak. However, the second observation is that the F of the *F1-OK* assumption is also 1.0 and the F of the *F2-OK* assumption is -0.95. The DMP technique correctly points out that the new data set is consistent with all three types of failure. However, given the agreement between sensors F2 and F4, DMP should (but doesn't) carry the diagnosis one step further and give even greater weight to the low pressure leak fault. This example highlights a weakness of the basic DMP technique in that it cannot properly distinguish between competing multiple faults. This weakness will be the subject of discussion in Section 4.3.

To illustrate the *correct* diagnosis in this third example, the *certain* failures of sensors F1 and F2 are indicated in Figure 4.6 as solid exclamation marks. However, the *absolute* low pressure leak fault is indicated in the figure as a *solid* symbol with an open exclamation mark.

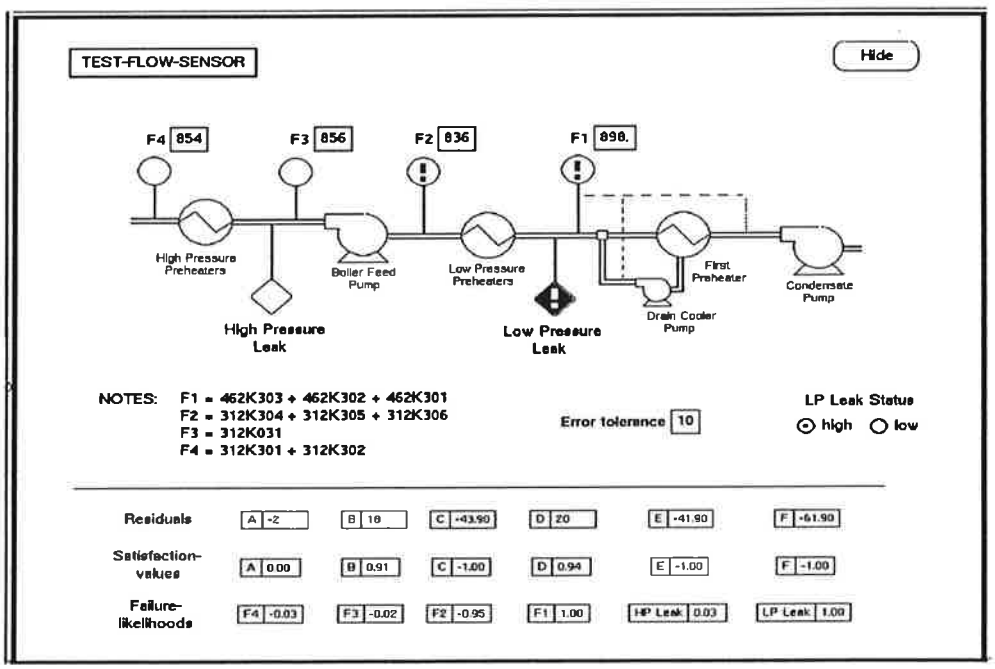

Figure 4.6 DMP summary display for low pressure leak fault.

Feedwater Heater Diagnostics

A DMP network for an individual feedwater heater is illustrated in Figure 4.7. Some thought must be given towards the nature of the balance equations before assembling the network; essentially one must exploit the available redundancies and frame the balance equations in terms of direct checks of sensor readings. In this example, one exploits the redundancies in both temperature and flow measurements to identify a fouling fault, a subcooling fault, a tube leak fault and the associated sensor faults.

For the temperature sensors, one must take advantage of both the explicit redundancies (for example, TX1 and TS should measure the same temperature) as well as the implicit redundancies (for example, TX1 should agree with the saturation temperature corresponding to PX1). These redundancies are used to check for temperature sensor faults, as well as a fouling "fault" (TE and TD should agree with the specified values of TTD and DCA) and a subcooling "fault" (TS should be saturated, not subcooled). The presence of any of these faults must be factored into the thermal analysis.

For the flow sensors, one can only make use of the implicit redundancies in the measurement of the heater drain flow. The direct measurement of the drain flow (FDM) can be compared with the value obtained from the overall heat and mass balance (FD) as well as the value obtained from a partial heat and mass balance on the drain cooler (FDE). The analysis is based upon the following set of eight equations:

$$c_a: \quad e_a = TS - TE - TTD, \quad where\ \tau_h = -\tau_l = 1$$

$$c_b: \quad e_b = TD - TI - DCA, \quad where\ \tau_h = -\tau_l = 1$$

$$c_c: \quad e_c = TS - TX1, \quad where\ \tau_h = -\tau_l = 1$$

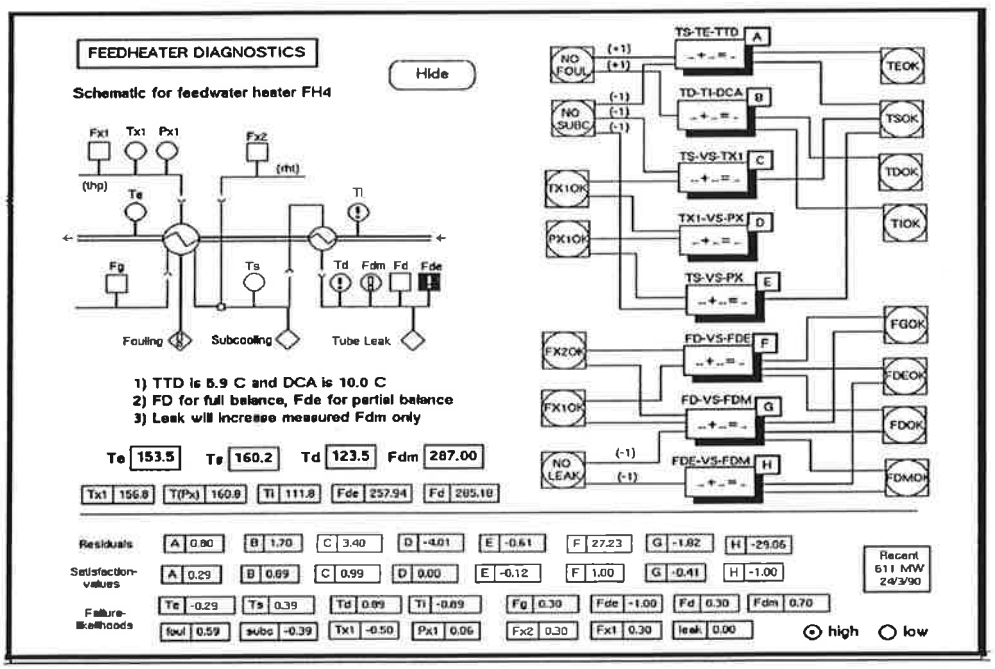

Figure 4.7 DMP display for feedwater heater diagnostics example.

$$c_d: \quad e_d = TX1 - TSAT(PX1), \quad where\ \tau_h = -\tau_l = 1$$

$$c_e: \quad e_e = TS - TSAT(PX1), \quad where\ \tau_h = -\tau_l = 1$$

$$c_f: \quad e_f = FD - FDE, \quad where\ \tau_h = -\tau_l = 2$$

$$c_g: \quad e_g = FD - FDM, \quad where\ \tau_h = -\tau_l = 2$$

$$c_h: \quad e_h = FDE - FDM, \quad where\ \tau_h = -\tau_l = 2$$

where TTD is the temperature terminal difference (nominally 5.9^oC) and DCA is the drain cooler approach temperature (nominally 10.0^oC). There are 15 assumptions to be considered:

$$a = \begin{pmatrix} TE\ is\ OK \\ TS\ is\ OK \\ TD\ is\ OK \\ TI\ is\ OK \\ FG\ is\ OK \\ FDE\ is\ OK \\ FD\ is\ OK \\ FDM\ is\ OK \\ no\ fouling \\ no\ subcooling \\ TX1\ is\ OK \\ PX1\ is\ OK \\ FX2\ is\ OK \\ Fx1\ is\ OK \\ no\ tube\ leak \end{pmatrix}$$

As the flows FD, FDE, FG, $FX1$ and $FX2$ are all calculated values, they are shown in Figure 4.7 as "squared" sensors to differentiate them from the true sensors. The result given in the figure is for the "Recent" data set described in Section 3.1. The set of failure-likelihoods is:

$$F = \begin{pmatrix} -0.29 & 0.39 & 0.89 & -0.89 & 0.30 & -1.00 & 0.30 & 0.70 \\ 0.59 & -0.39 & -0.50 & 0.06 & 0.30 & 0.30 & 0.00 \end{pmatrix}$$

The assumptions *FDM-OK* and *No Fouling* are shown as ***likely*** failures with failure-likelihoods of 0.70 and 0.59, respectively. The assumptions *TD-OK* and *TI-OK* are shown as ***certain*** failures with failure-likelihoods of 0.89 and −0.89, respectively. The assumption *FDE-OK* is shown as an ***absolute*** failure with a failure-likelihood of −1.00. As FDE is a calculated variable, no conclusions can be drawn with respect to its "failure" until the network is expanded to include all variables. The ***certain*** failures of sensors for TI and TD are due to the ***likely*** fouling of heater FH4 coupled with the fact that TI and TD have only single dependencies. If this network was coupled to the network for the upstream feedheater FH3, two more dependencies could be added and the failure-likelihoods of TI and TD would likely be reduced to less than 0.8. Finally, the fact that FD agrees with FDM (within the tolerance of $\pm 2\ kg/s$), means that DMP should conclude that the failure of FDE should be labelled an ***absolute*** and not a ***certain*** failure. Again, this is an example of DMP being unable to properly discriminate between competing multiple faults.

4.3 Discussion

The diagnostic model processor allows for the detection of non-competing multiple faults. This often leads to the failure likelihood of several assumptions exceeding the 0.5 alarm limit when a single failure has occurred. This was illustrated in the flow diagnostics example of a LP leak fault. To provide improved fault discrimination and to direct attention to the most probable fault, some form of procedure must be added to the basic DMP technique to check the causal relationships between assumptions.

For the IT4 Project (Årzén, 1990), Petti developed a procedure for DMP that basically assumes a fault condition and then checks the expected behaviour of the model equations to see if other failure likelihoods should exceed 0.5. If this is the case, the assumption is said to *explain* the appearance of the other assumptions.

Petti's procedure uses two assumptions as arguments (a_1 and a_2) whose F values exceed 0.5. The purpose is to try to establish the relation that a_1 is "explaining" a_2. The procedure uses the most sensitive model equation which is connected to a_1 to estimate the magnitude of the deviation of a_1, assuming that the deviation of the equation is caused solely by a deviation of a_1:

$$DEV(a_1)_{est} = \frac{e_j}{\partial c_j / \partial a_1} \tag{4.5}$$

where c_j is the most sensitive equation connected to a_1. By means of this estimate of the deviation and the partial derivatives of the connections surrounding a_1, the residuals and satisfaction values of all equations connected to a_1 can be estimated. The residuals are estimated based on $DEV(a_1)_{est}$:

$$e_{j_{est}} = DEV(a_1)_{est} \frac{\partial c_j}{\partial a_1} \tag{4.6}$$

and from these values, equation (4.2) is used to estimate satisfaction values, sf_{est}. Finally, the vector sf_{est} is used to calculate a failure likelihood of a_2 using equation (4.4). If the calculated value of F_2 is close to the actual value of F_2 (that is $|F_2 - F_{2_{est}}| < 0.2$), then a_1 is said to "explain" a_2.

If any assumption is not "explained" by any other assumption, it is considered top-level (or *absolute* in the terminology of the BARSE project) and is marked accordingly. Also, if assumption a_1 "explains" a_2 and a_2 also "explains" a_1, they are both considered top-level and are indicated as such. Finally, if any assumption cannot "explain" itself, then presentation of this failure is suppressed completely (no exclamation mark on the process schematic).

Petti's procedure was intended to limit the number of fault alerts on the process schematic and improve the discrimination between faults without discarding any information (the original F values are retained). It was reported to work for the demonstration of DMP as applied to Alfa-Laval's Steritherm process. However, an attempt to implement the procedure within the BARSE program failed. With more time, it is anticipated that this problem can be solved, as it must if DMP is to be used to its full potential.

Two final observations can be made with respect to DMP on the basis of experience to date. The first relates to the implementation of DMP within G2 and the second relates to fundamental problems with the DMP technique.

G2's object orientation makes creation of a DMP graphical network relatively easy. The DMP network can be easily appended and edited on-line which simplifies network expansion and debugging. It is only the programming of the partial derivatives that is prone to error. This particular aspect may be a problem for large networks.

The fact that the fault discrimination capability of DMP needs to be improved as it relates to competing multiple faults has already been the subject of discussion. However, consideration should also be given to expanding the DMP technique to include temporal data. At the moment, DMP is strictly a "snap-shot" diagnostic technique and as such fails to utilize the vast amount of information contained in historical data. DMP could possibly be modified to include some of the features of the Model Integrated Diagnosis Analysis System (MIDAS) under development at MIT (Oyeleye et al, 1989).

MIDAS uses the signed directed graph (SDG) technique. SDG's show the causal relationships among variables and are a fairly common method to represent model-based process knowledge. A drawback of digraphs is that they usually have no notion of time. The time it takes before a change is noticed in a variable is not represented. This is handled in MIDAS through the introduction of the Extended Signed Directed Graph (ESDG) and reformulation of the ESDG into an event representation to account for transitions from a prior to a subsequent state. In this manner transient behaviour, start-up sequences, and operation in different modes can be covered; aspects that DMP must be able to handle for it to be considered as a fully functional diagnostic technique.

4.4 Future Work

The key to effective implementation of any diagnostic technique is the degree of instrument redundancy. The greater the degree of redundancy, the greater the accuracy of the diagnosis. As such, the improvement in the instrumentation of the plant should be given a priority from the perspective of the diagnostics analysis.

Additional Instrumentation

The shell temperatures and pressures of all feedwater heaters should be measured. The shell temperature and hotwell temperature of the condenser should be measured (instruments exist but are not working). Ideally, there should be a measurement of steam quality at the outlet of the reactor, but this would be both difficult and expensive. A measure of the steam pressure before the turbine throttle valve is also needed. Given the desire to focus on diagnostics of the feedwater system, the possibility of measuring all drain flows should be reviewed. Alternately, if the information on the valve characteristics can be obtained, a study should be made of using the drain control valve position (control signal) to predict drain flow could be conducted.

Improvements to DMP

The ability of DMP to discriminate between competing multiple faults needs to be improved. The first step would be to get Petti's procedure to work, as discussed in the Section 4.3. In addition, a facility must be developed to enable the User to interrogate DMP as to the manner in which a diagnosis is arrived at. This facility would likely take the form of some sort of compromise between the sensor mimic diagram and DMP network currently in use.

Expansion of DMP

Any effort to expand the two DMP examples currently implemented within BARSE should focus on expansion of the individual feedwater heater analysis to include all five heaters in the feedwater system. This is the area that is likely to provide the best practical results in terms of the diagnostic facility offered by the program.

On-line Implementation

Currently, the results of the DMP analysis must be fed manually to the thermal analysis (for example, the correct value of the feedwater flow rate as determined by the sensor diagnostics). At some point, presumably when the program is implemented on-line within G2, the DMP results *could* be fed directly to the thermal analysis. However, this may not be desirable given the importance of human interpretation of the diagnostic results. A common weakness of many diagnostic system applications is their failure to maintain a "human-in-the-loop", recognizing that human diagnostic skills are ultimately superior to those offered by any computer.

5. Conclusions

The project was considered a success as a working demonstration program was developed by a novice user in less than two man-months. It is estimated that the development cost for a production version of the program would be on the order ot two to four man-years.

5.1 Comments on G2

Overall, the author was very impressed with the software. A programming task that might have taken over a year with a conventional expert system tool such as Texas Instruments PC Plus required less than two months with G2. This is not to say that there are no areas for improvement with the software. The following criticisms can be made:

- o Lack of a supplied facility for conventional plotting
- o Lack of a supplied facility for custom display design
- o Lack of a supplied facility for data file input
- o Inability to link with FORTRAN code
- o No protection against bugs in external code
- o Lack of a runtime package

One recognizes that the first three criticisms can (and were) dealt with by means of some extra programming. The T-s diagram (an example of conventional plotting) was sucessfully implemented. A solid LED type bargraph (an example of a custom display) was also implemented in one version of the program. The lack of a data file input facility was dealt with in a rather crude fashion by means of a *conclude that ....* set of commands (refer to Appendix C for details). However, the time taken to develop these features detracted from the main purpose of the programming exercise. Thus, these criticisms are directed at the opinion that these features should have been supplied as internal functions within G2.

The first three criticisms can be made more general by making the observation that G2 is a closed system; if what G2 provides is insufficient nothing can be done by a user except wait for the next release. A case in point is the lack of dynamic objects in Version 1.0 (which has been corrected in release Version 2.0).

The inability to link with FORTRAN code is acknowledged by Gensym to be a bug in the release of G2 for machines with a RISC architecture (such as the SUN SPARCstation 1). There is no problem linking with C code; with the exception that if there is a bug in the C code (for example the return of a "non-number" in a property call) G2 will crash without explanation and with a complete loss of the current version of the knowledge base.

The runtime package criticism relates to the fact that G2 cannot be modularized and this increases the cost of the software to the end-user. Once a production version of an application has been developed in G2, a separate license must be purchased for each site. G2 requires full functionality for each application, no matter how small the problem.

For more demanding real-time applications, one notes that the smallest unit of time in G2 is one second. As with most expert systems software, program cycle time is difficult to predict. Gensym claims 300 to 500 medium-sized rules per second. Whether this is fast enough can only be judged within the context of each new application.

Criticisms that have been made by other users such as the inability to have duplicate object names (that is having the same component on two different workspaces) did not present a problem in this application.

As a more general criticism one notes that expert systems, especially those are are graphically oriented such as G2, are very difficult to document. There is no facility for a program listing or a list of variables. This means that validation of the code is not possible in the conventional sense. The inability to properly validate and document expert system software may turn out to be the biggest stubbling block to its widespread industrial application.

5.2 Recommendations

A great deal more work must be conducted to take the program to the production stage. In the near term, further development of the program could take one of two directions:

- o Given that the emphasis is on thermal performance and economic assessment, development of the turbine model should be given priority
- o Given that the emphasis is on diagnostics of fault conditions, the DMP technique should be expanded to include the full feedwater train

Given the author's knowledge of the interests and experience of the two utilities involved with the project, it is recommended that Sydkraft work on the latter (diagnostics) and Vattenfall on the former (economics).

A number of specific items for future work have been mentioned in the body of the report. The important items are summarized as follows:

Thermal Analysis Development

More detailed models need to be developed for the turbine, feedwater heater and the generator. In view of the future possibility for on-line implementation of the program, the averaging of the instrument data should be done within the program. The existing steam property routines should be replaced by in-house steam property routines.

Economics Analysis Development

The uncontrollable nature of certain target parameters must be accounted for, as well as their nonlinear and dependent nature. The size of the target variable set needs to be expanded to fully account for the non-optimal gross cycle efficiency observed from recent plant data. Additional plant data sets should be added to evaluate the success of this exercise.

Diagnostics Analysis Development

The two existing DMP networks need to be expanded to include more of the cycle, in particular the full feedwater system. Some basic research is required to improve the DMP technique. The ability of DMP to discriminate between non-competing multiple faults needs to be improved. Some mechanism for a user explanation facility is also required.

New Instrumentation

In support of the diagnostic analysis, additional instrumentation should be installed or repaired, in particular instruments for the measurement of feedwater heater shell pressure, steam pressure upstream of the turbine throttle valve and condenser shell temperature. A review should be conducted of the instrumentation that was in place at the time of the plant acceptance tests.

6. Acknowledgements

The work reviewed in this report was conducted while the author was resident as a Visiting Professor in the Department of Automatic Controls, Lund Institute of Technology, Lund, Sweden. The financial support provided by the utilities Sydkraft and Vattenfall for the position is gratefully acknowledged.

7. References

ÅRZÉN, K.E. (1990): "Knowledge-based Control Systems," *Proceedings, American Controls Conference*, San Diego, California, May 23 to 25.

BERNARD, J.A. AND T. WASHIO (1989): *Expert Systems Applications Within the Nuclear Industry*, American Nuclear Society, La Grange Park, Illinois.

FRENCH, P.D. (1989): "Performance Monitoring Systems Can Reduce Operating Costs," *Power Engineering*, **February**, pp. 42-44.

KOZLIK, G.W., K.W. BLEAKLEY, AND B.C. SKINNER (1988): "Artificial Intelligence System Optimizes Boiler Performance," *Power Engineering*, **February**, pp. 44-47.

LARSSON, J.E. (1990): "A Multilevel Flow Model of Steritherm," *Proceedings, Ninth Annual Workshop and Meeting of the Swedish AI Society*, C.G. Jansson (editor), Royal Institute of Technology, Stockholm.

OYELEYE, O.O., F.E. FINCH AND M.A. KRAMER (1989): "Qualitative Modeling and Fault Diagnosis of Dynamic Processes by MIDAS," *Annual Meeting American Institute of Chemical Engineers*, San Francisco, California, November, Paper 87g.

PETTI, T.F., J. KLEIN, AND P.S. DHURJATI (1990): "The Diagnostic Model Processor: Using Deep Knowledge for Process Fault Diagnosis," *American Institute of Chemical Engineering (AIChE) Journal - accepted.*

SCHROEDER, L.R., C.D. GADDY, AND A.N. BEARE (1989): "New Control Technologies Require Good Human Factors Engineering," *Power Engineering*, **November**, pp. 29-32.

SØRENSSEN, A. (1990): "An Early Fault Detection System Running on a Live Power Plant," *OECD Halden Reactor Project, Report HWR-267*, Halden, Norway.

A. User's Overview

This Appendix provides an overview of the program by leading the User through the various displays or screens. When instructed to "click", any of the three mouse buttons can be pressed.

Introduction Screen

Upon starting G2 and loading the knowledge base BARSE-1, the title page illustrated in Figure A.1 should appear. Before starting the program, the knowledge base must be linked with the C object code used for the steam properties. This is accomplished by clicking on the background and selecting *Miscellaneous* from the menu that appears. This will cause a second sub-menu to appear. The *Load C File* option should be selected from this sub-menu. Once this has been completed and the C object has been successfully loaded, the program can be started by clicking on the background for a second time and selecting *Start* from the menu that appears.

Clicking on the *Help* Action will call up a brief outline of the program as given in Figure A.2. The User's Menu given at the top of the screen has five main Actions to select from: Data Input, Schematic, Economics, Diagnostics and TS-Diagram. There are a number of sub-menus available to the User: Diagnostics, Systems, Developer and Data Menu.. These are illustrated in Figure A.3.

Data Input Screen

Clicking on the *Data Input* Action will cause the Data Input screen illustrated in Figure A.4 to appear. Though 54 data points can be input, only 29 are used by the thermal analysis.

Alternately, a number of stored data sets can be selected from the Data Menu illustrated in Figure A.3. This menu is obtained by selecting the *Data Menu* Action from the User's Menu.

Schematic Screen

Clicking on the *Schematic* Action will cause the cycle Schematic screen illustrated in Figure A.5 to appear. The schematic summarizes the cycle heat and mass balance. It also allows the User to manipulate eight variables: condenser bypass, FH5 throttle, FH5 fouling, steam pressure, reheater fouling, feedwater flow, turbine efficiency and condenser vaccuum.

More detailed views of sub-systems are available. The view of the LP turbines illustrated in Figure A.6 was obtained by selecting the *System* Action from the User's Menu and then selecting the *LP-Turbines* Action from the System Menu.

The User can "zoom-in" on specific components. The view of FH5 illustrated in Figure A.7 was obtained by clicking on the FH5 object in the schematic.

Finally, the summary of all data points illustrated in Figure A.8 can be obtained by selecting the *Data Menu* from the User's Menu and then selecting the *Full Variable Set* action from the Data Manu.

Economics Screen

Clicking on the *Economics* Action will cause the Economics analysis screen illustrated in Figure A.9 to appear. The analysis displays the cost of off-target values for six variables: turbine efficiency, condenser vacuum, steam pressure, FH5 extraction throttle, Fh5 fouling and condenser bypass.

The analysis assumes that the impact of the six target variables is independent. Clicking on the *Reference* Action will cause the Reference screen illustrated in Figure A.10 to appear. This screen illustrates the individual impact of the six target variables on the cycle efficiency.

Diagnostics Screen

Clicking on the *Diagnostics* Action will cause a diagnostics sub-menu to appear. The sub-menu has two selections to illustrate the application of model-based diagnostics: Flow Diagnostics (shown as Figure A.11) and Feedheater Diagnostics (Figure A.12).

T-S Diagram Screen

A dynamic Temperature-Entropy (T-S) cycle diagram is available as an additional analysis tool. Clicking on the *TS-Diagram* Action will cause the T-S Diagram illustrated in Figure A.13 to appear.

Message Facility

There is a message facility that alerts the User to off-target performance. A sample set of messages is given in Figure A.14. This display is obtained by clicking on the *Logged Messages* object on the User's Menu. One notes that actions are available to *Acknowledge* and *Reset* these alarms.

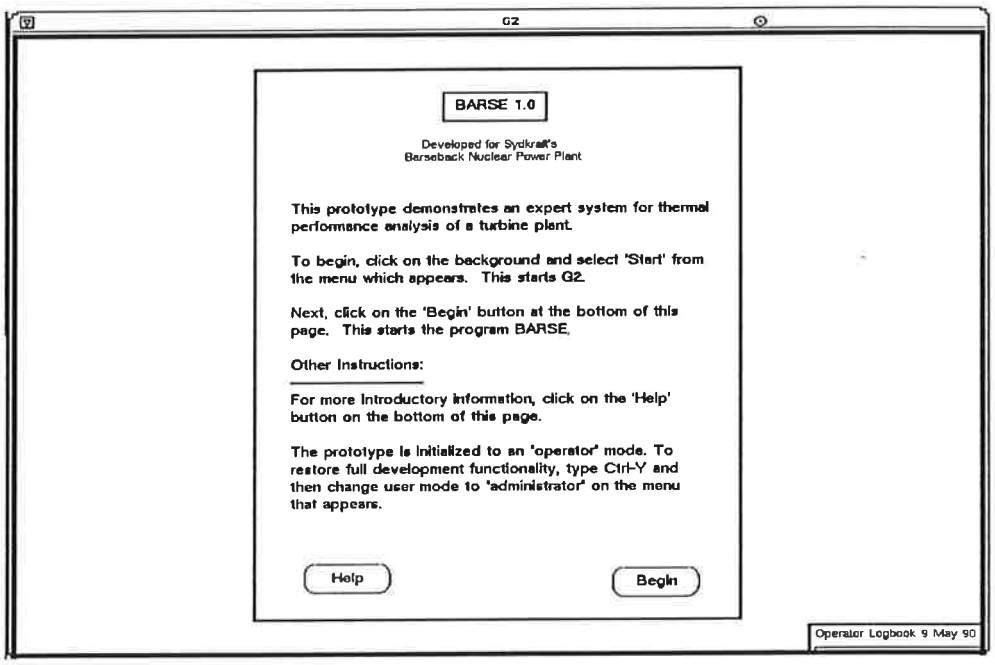

Figure A.1 The Title page screen.

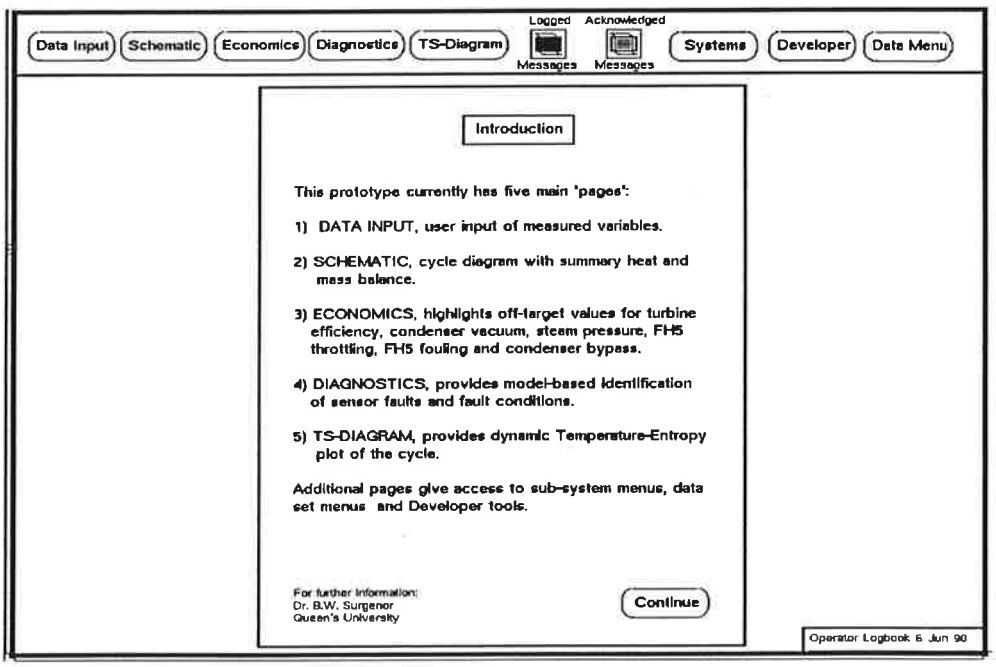

Figure A.2 The Introductory help screen.

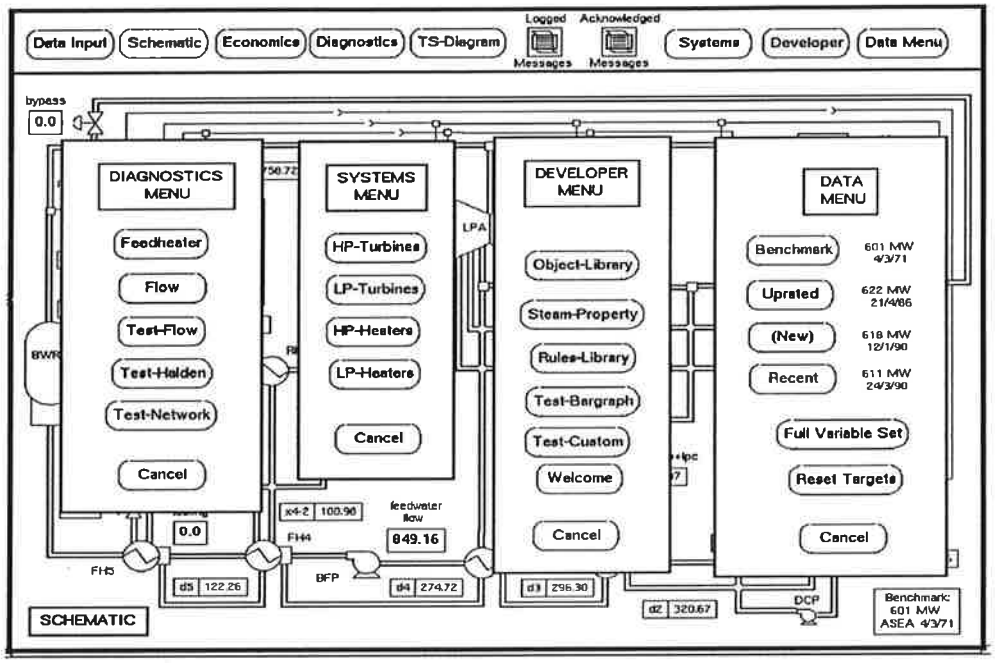

Figure A.3 The sub-menus available to the User.

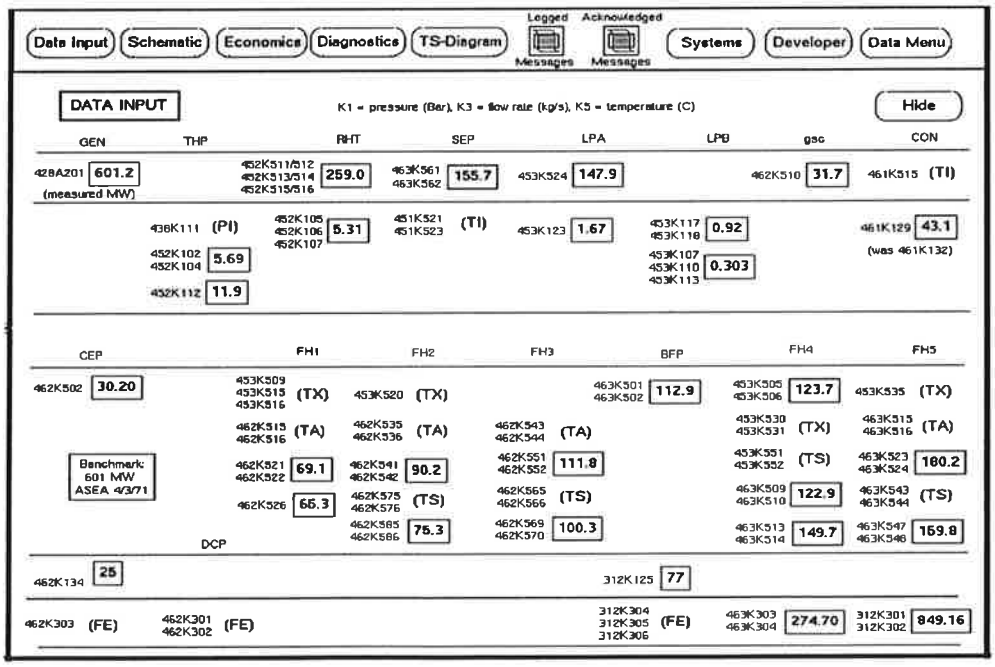

Figure A.4 The main Data Input screen.

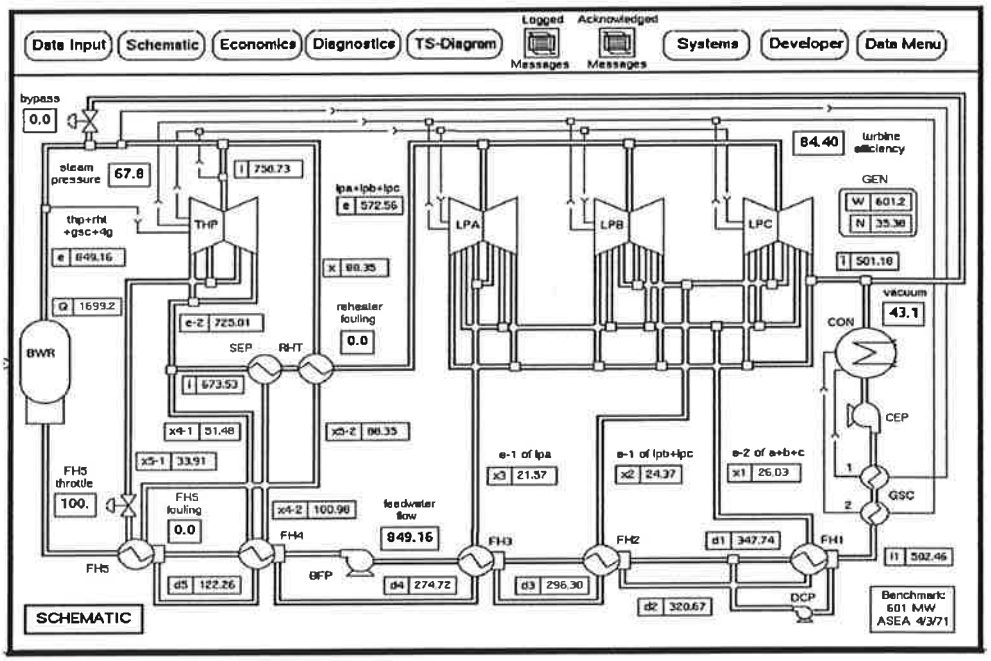

Figure A.5 The cycle Schematic screen.

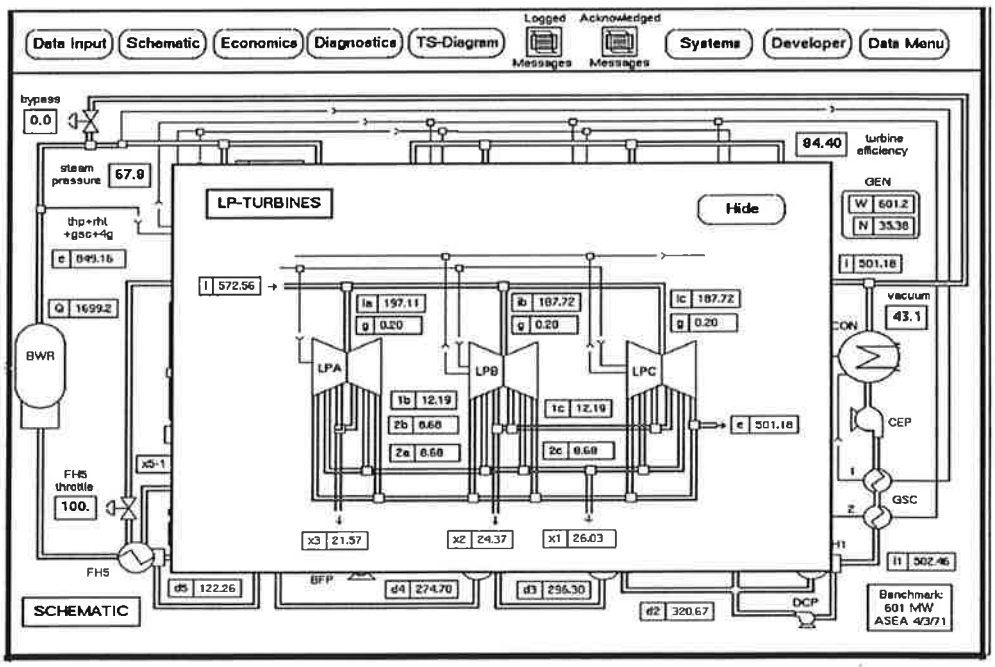

Figure A.6 Sample display of a sub-system (LP turbines).

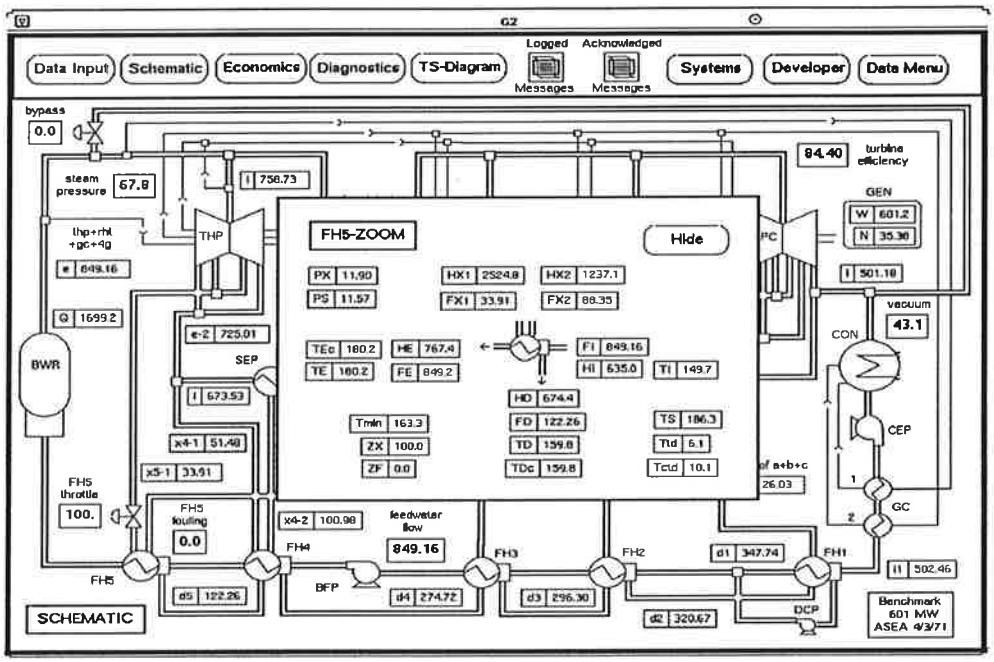

Figure A.7 Sample display of an individual object (FH5 heater).

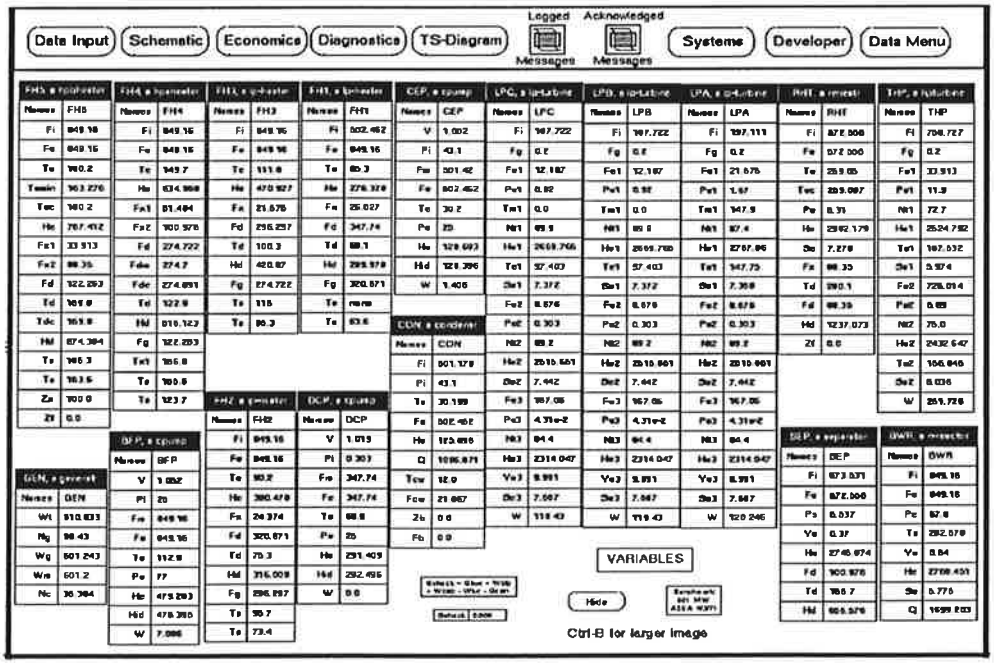

Figure A.8 Display of full variable set.

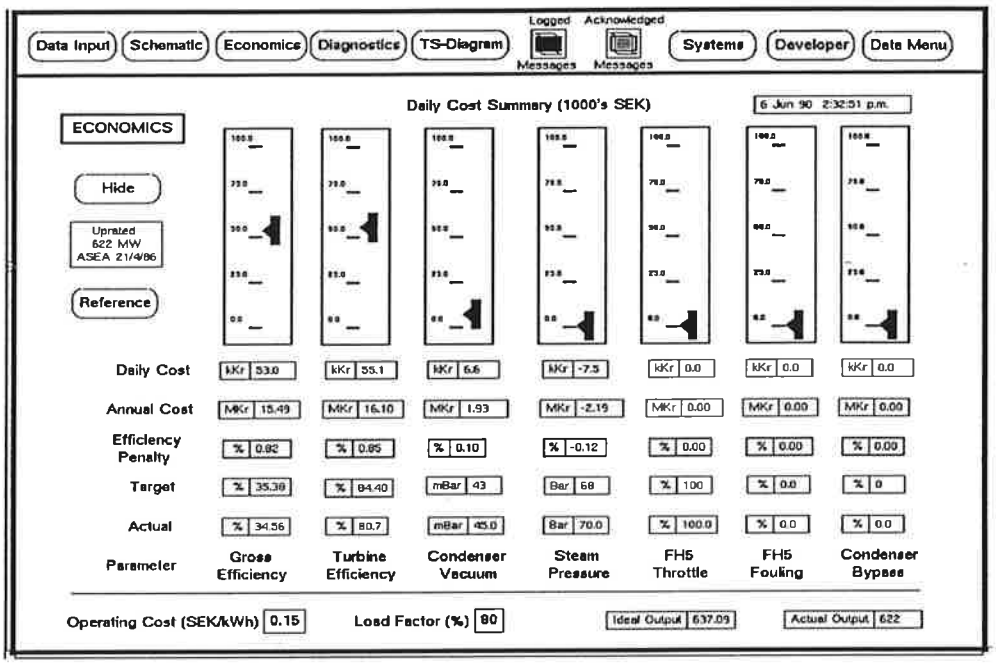

Figure A.9 The Economic analysis screen.

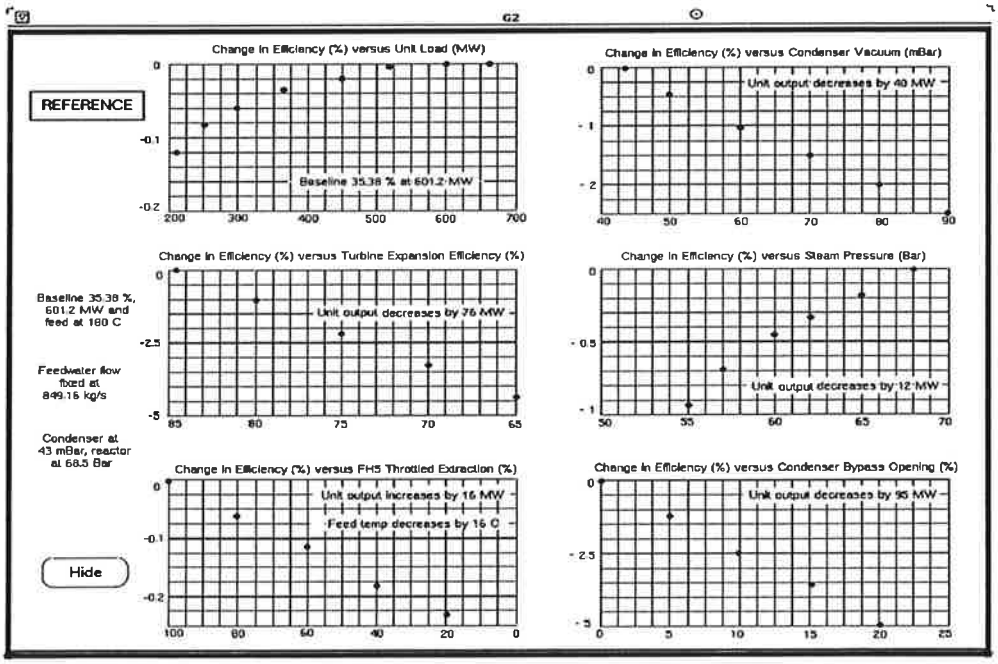

Figure A.10 The Reference screen.

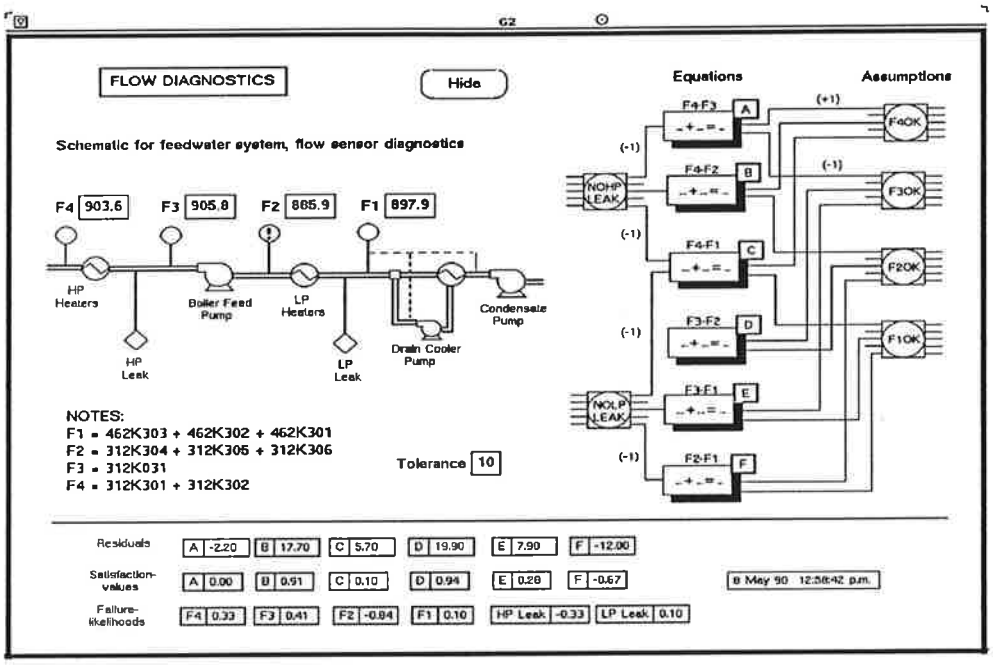

Figure A.11 The Flow Diagnostics screen.

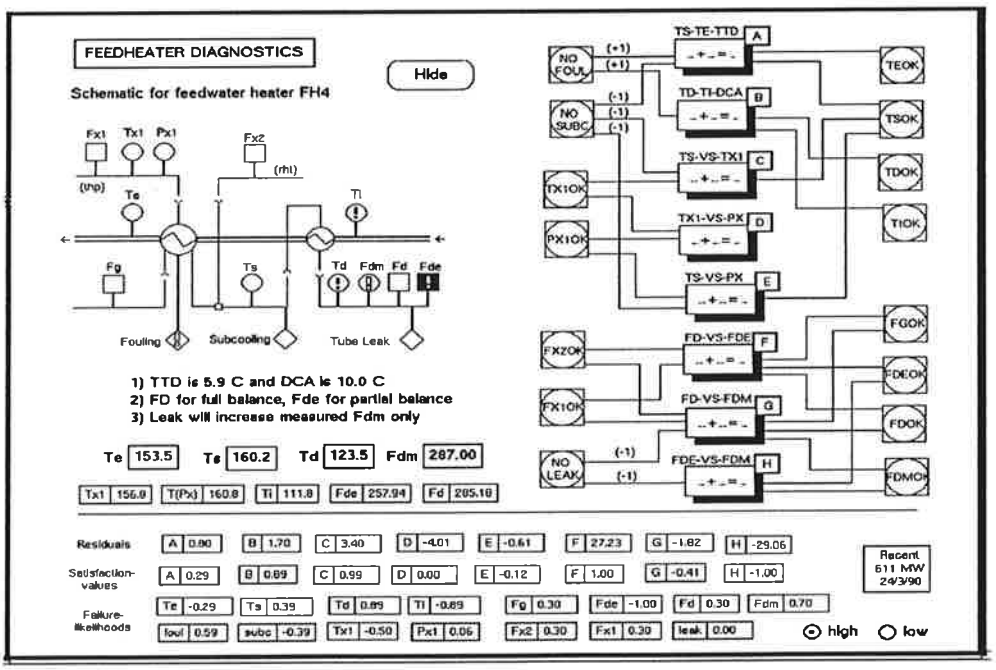

Figure A.12 The Feedheater Diagnostics screen.

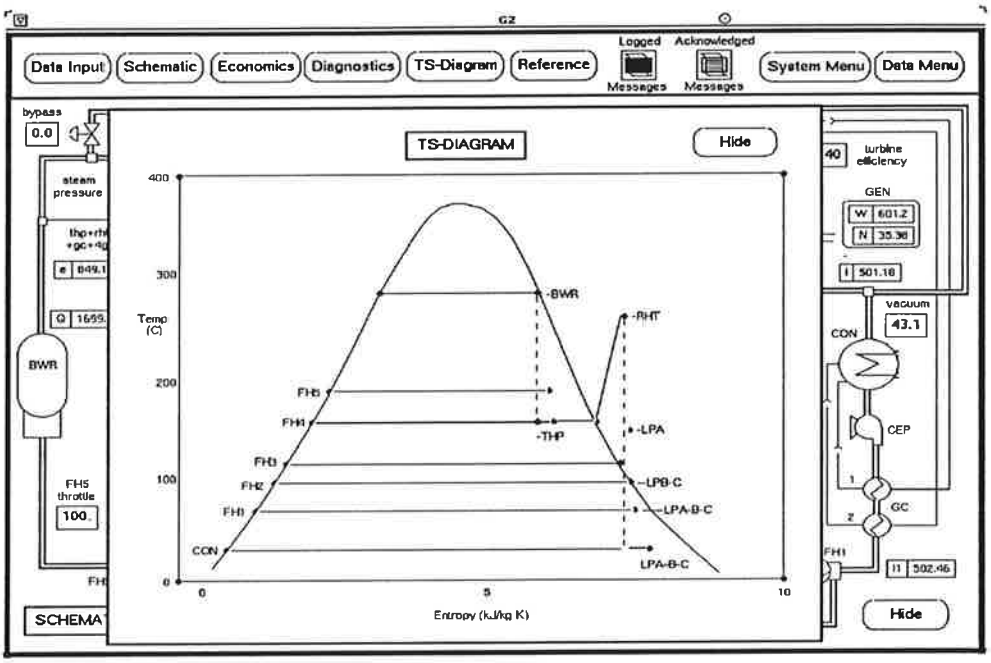

Figure A.13 The T-S Diagram screen.

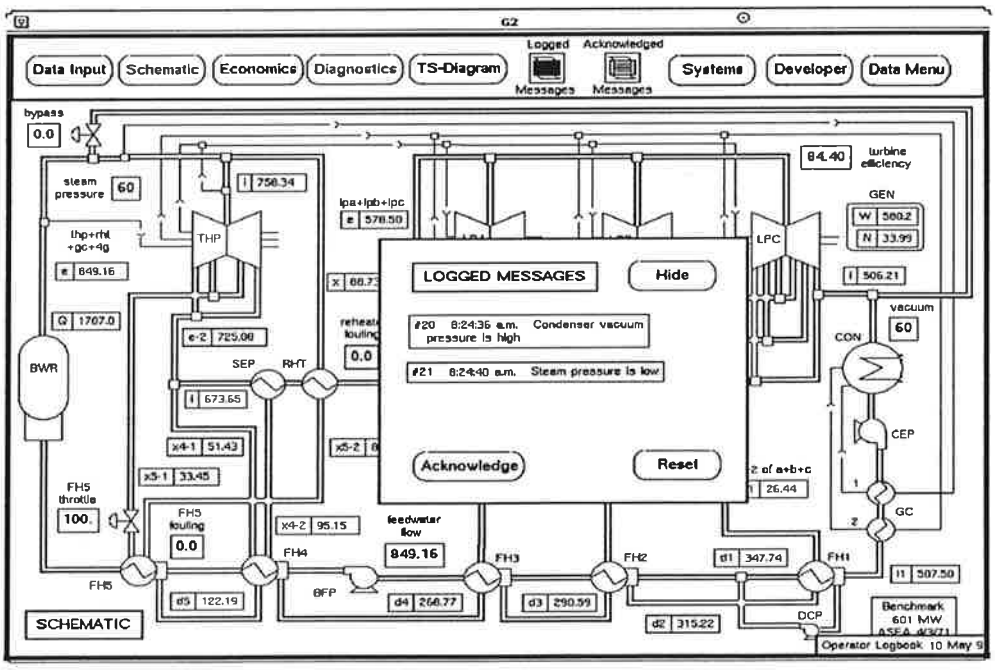

Figure A.14 Sample alarm message screen.

B. Model Documentation

This Appendix provides documentation on the model used as the basis for the Barsebäck turbine cycle heat and mass balance. The model is implemented entirely within the G2 simulator, with external property calls to a steam property program written in C code. To comply with G2's convention for the naming of attributes (variables) and objects (components), a somewhat unconventional nomenclature style had to be adopted.

As illustrated by their icons in Figure B.1, eleven object classes were defined to construct the cycle schematic and the underlying process model (the *pump* and *generator* classes are not shown). As summarized in Table B.1, a total of eighteen objects were in turn created from these eleven classes. The object names given in Table B.1 correspond to the labels given to the components shown on the cycle schematic and referred to in all model equations.

Within each of the eleven classes, a set of variables were defined. The principal variable names are summarized in Table B.2. The principal variable names are in turn expanded to include the assigned locations of Figure B.1. For example, the feedwater exit temperature of high pressure feedwater heater FH5 is referred to in the G2 program as *the TE of fh5*. Within the equations given in this Appendix, it is referred to as TE_{fh5}. Figure B.1 does not show two of the location variables for the feedwater heater; namely A and S where TA is the temperature of the feedwater between the drain cooler and the main cooler and TS is the temperature in the steam line between the main cooler and the drain cooler.

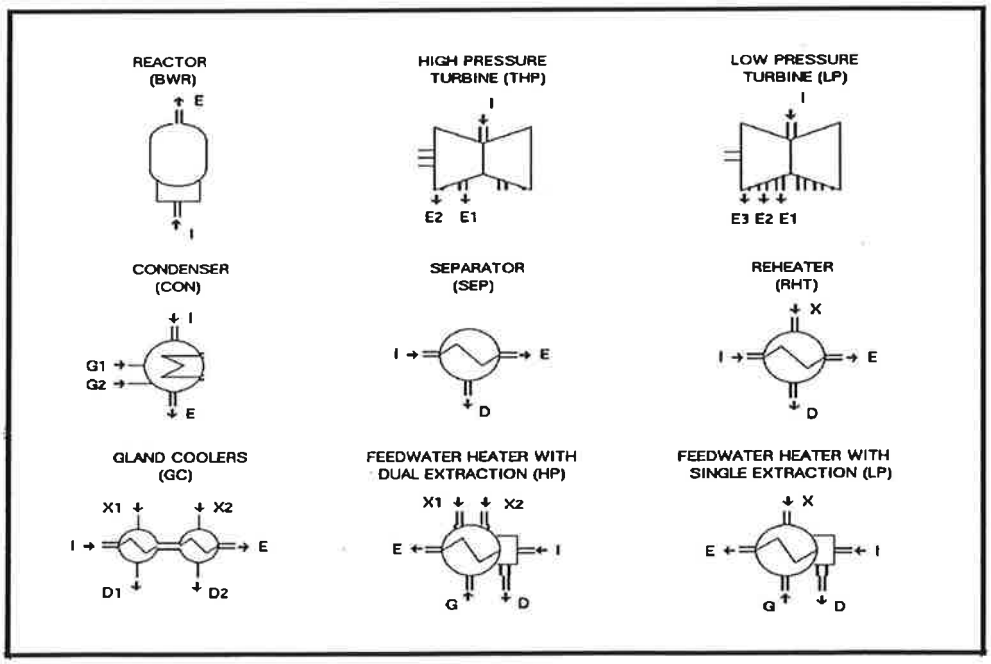

Figure B.1 Principal object icons and variable location names

Table B.1 Component names adopted for the model

Component		Name	Component	Name
High pressure feedheater	5	FH5	Boiler feed pump	BFP
	4	FH4	Reactor	BWR
			Condensate pump	CEP
Low pressure feedheater	3	FH3	Condenser	CON
	2	FH2	Drain cooler pump	DCP
	1	FH1	Generator	GEN
			Gland steam coolers	GSC
Low pressure turbine	A	LPA	Reheater	RHT
	B	LPB	Separator	SEP
	C	LPC	High pressure turbine	THP

Table B.2 Principal variable names adopted for the model

Variable	Symbol	Units
Annual cost	AC	$kSEK/day$
Daily cost	DC	$kSEK/day$
Efficiency penalty	EP	%
Operating cost	FC	SEK/MWh
Flow rate	F	kg/s
Enthalpy	H	kJ/kg
Gross cycle efficiency	NC	%
Generator efficiency	NG	%
Load factor	LF	%
Turbine stage efficiency	NT	%
Thermal power	Q	MW
Pressure	P	Bar
Entropy	S	$kJ/kg\ K$
Temperature	T	^oC
Specific volume	V	m^3/kg
Mechanical power	W	MW
Moisture fraction	Y	%
Bypass valve opening	ZB	%
Fouling factor	ZF	%
Throttle valve opening	ZX	%

B.1 Steam Properties

Steam properties are obtained by an external call to a property program written in C. The routines are based upon those of Irvine (1984) and are accurate to within ± 0.1 %. Unless otherwise stated, metric units are employed (kJ/kg, Bar, $kJ/kg\ K$, ^oC, m^3/kg for H, P, S, T, V, respectively).

The function HFIND(H,N,P,S) for the high and low pressure turbines employs the following set of equations:

$$X_{ad} = \frac{S - SLIQP(P)}{SVAPP(P) - SLIQP(P)}$$

$$H_{ad} = HLIQP(P) + X_{ad}\ (HVAPP(P) - HLIQP(P))$$

$$HFIND = H - (N/100)\ (H - H_{ad})$$

where the adiabatic efficiency N is assumed constant for the turbine stage under examination.

Table B.3 Steam property function calls

Function Name	Identity
HFIND(H,N,P,S)	finds turbine exhaust enthalpy, give inlet enthalpy turbine efficiency, outlet pressure, inlet entropy
HLIQP(P)	saturated liquid enthalpy, given pressure
HLIQT(T)	saturated liquid enthalpy, given temperature
HMIXP(P,Y)	saturated mixture enthalpy, given pressure and % moisture
HSUB(T,P)	subcooled enthalpy, given temperature and pressure
HSUP(T,P)	superheated enthalpy, given temperature and pressure
HVAPP(P)	saturated vapour enthalpy, given pressure
HVAPT(T)	saturated vapour enthalpy, given temperature
PSAT(T)	saturation pressure, given temperature
SFIND(P,T,H)	finds entropy, given pressure, temperature and enthalpy (for superheated steam)
SLIQP(P)	saturated liquid entropy, given pressure
SSUP(T,P)	superheated entropy, given temperature and pressure
SVAPP(P)	saturated vapour entropy, given pressure
TFIND(P,H)	finds temperature, given pressure and enthalpy (can be subcooled or superheated)
TSAT(P)	saturation temperature, given pressure
VLIQT(T)	liquid specific volume, given temperature

B.2 Component Models

As the mass balance cannot be obtained explicitly, an iterative solution is required. This is achieved within the G2 simulator by declaring a set of key variables as *state* variables (specifically, all turbine extraction line enthalpies, reheater exit temperature, reheater exit flow rate). Figure B.2 illustrates how an equation is entered as a *simulation formula* within the *table* of an object. Figure B.3 illustrates the declaration of an equation as a state variable.

Feedwater Heaters

Assuming that the enthalpies at all its locations are known, the heat and mass balance of a feedwater heater can be used to calculate the main extraction flow. For a heater with two extractions the heat balance gives (taking the main cooler plus the drain cooler as the control volume):

$$FX1 = \frac{FE\,(HE - HI) - FX2\,(HX2 - HD) - FG\,(HG - HD)}{HX1 - HD} \tag{B.1}$$

The mass balance for the heater becomes:

$$FD = FX1 + FX2 + FG \tag{B.2}$$

For a heater with only one extraction, the heat balance gives:

$$FX = \frac{FE\,(HE - HI) - FG\,(HG - HD)}{HX - HD} \tag{B.3}$$

and the mass balance is:

$$FD = FX + FG \tag{B.4}$$

In all cases the enthalpies are obtained from the appropriate calls to the steam property routines.

For the purposes of the diagnostics analysis, a heat balance is conducted about the drain cooler only to obtain an *estimated* value for the drain flow:

$$FD^E = FE\,\frac{HSUB(TA, PI), PI) - HI}{HLIQT(TS) - HD} \tag{B.5}$$

where FD^E can be compared with the measured drain flow FD^M and the drain flow FD calculated from equations (B.2) and (B.4).

To reduce the number of variables, the exit state of an upstream component is used as the inlet state for the downstream component. Thus, for feedwater heater FH5 which is: 1) downstream from heater FH4, 2) has its second extraction from the reheater drain and 3) has its first extraction from the first exit of the high pressure turbine, equation (B.1) becomes:

$$FX1_{fh5} = \frac{FE_{fh5}\,(HE_{fh5} - HE_{fh4}) - FX2_{fh5}\,(HD_{rht} - HD_{fh5})}{HE1_{thp} - HD_{fh5}} \tag{B.6}$$

recognizing that $FG_{fh5} = 0$, $FX2_{fh5} = FD_{rht}$ and $FI_{fh5} = FE_{fh5}$.

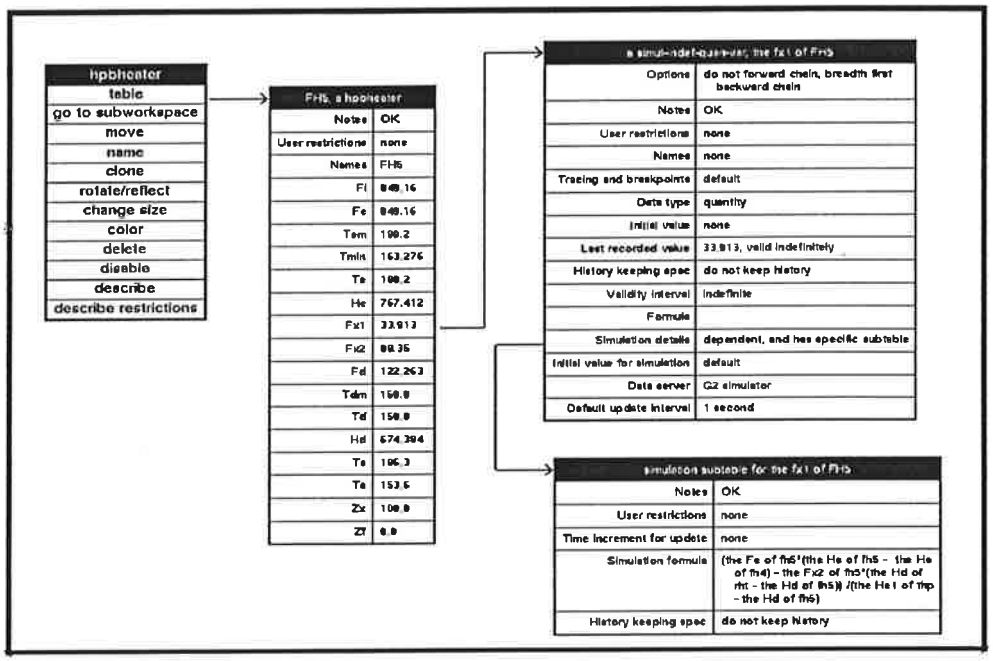

Figure B.2 Sample entry of an equation within G2

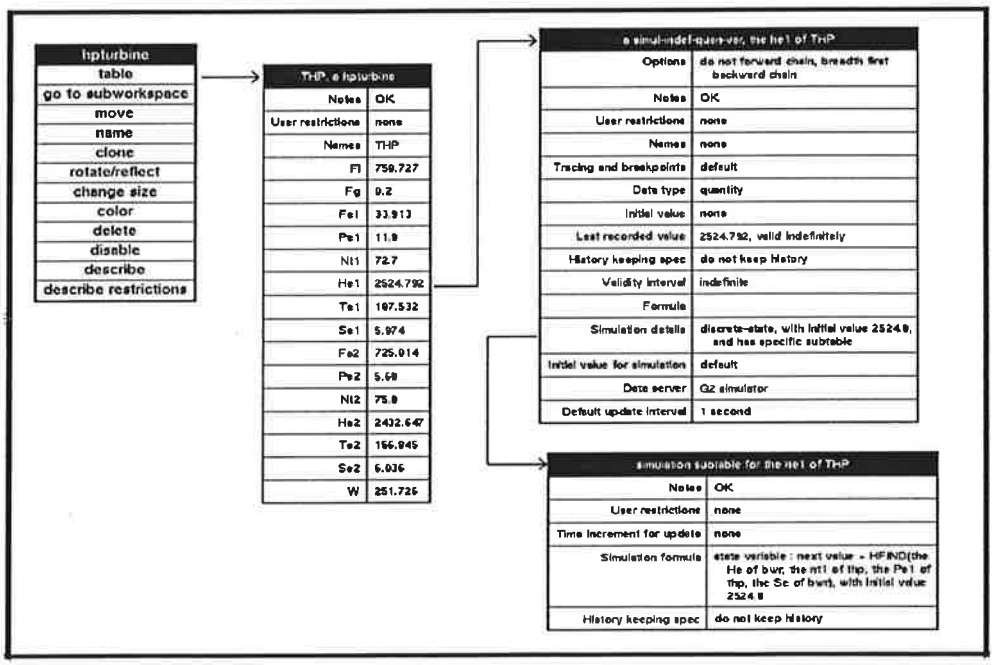

Figure B.3 Sample declaration of a state equation within G2

The exception to the above "generic" equations is the case of FH1 which has its drain pumped forward. In this case, equation (B.3) can be written as:

$$FX_{fh1} = \frac{FE_{fh1}(HE_{fh1} - HE_{gsc}) - FG_{fh1}(HD_{fh2} - HE_{gsc})}{HE2_{lpc} - HE_{gsc}} \tag{B.7}$$

assuming that the enthalpy rise across the drain cooler pump can be neglected and with $FG_{fh1} = FD_{fh2}$.

As a further example, equation (B.5) as applied to feedwater heater FH4 is written in reduced form as:

$$FD^{E}_{fh4} = FE_{fh4} \frac{HSUB(TA_{fh4}, PE_{bfp}) - HE_{bfp}}{HLIQT(TS_{fh4}) - HD_{fh4}} \tag{B.8}$$

Turbines

For the high pressure turbine, the total work is calculated as:

$$W_{thp} = (FI_{thp} + FG_{thp})\ HE_{bwr} - FE1_{thp}\ HE1_{thp} - FE2_{thp}\ HE2_{thp} \tag{B.9}$$

and the mass balance is given as:

$$FI_{thp} = FE1_{thp} + FE2_{thp} - FG_{thp} \tag{B.10}$$

with:

$$FE2_{thp} = FI_{sep} + FX1_{fh4} \tag{B.11}$$

and:

$$FE1_{thp} = FX1_{fh5} \tag{B.12}$$

For the low pressure turbines (lpa, lpb, lpc), the total work is:

$$W_{lp} = FI_{lp}\ HE_{rht} + FG_{lp}\ HE_{bwr} - FE1_{lp}\ HE1_{lp} - FE2_{lp}\ HE2_{lp} - FE3_{lp}\ HE3_{lp} \tag{B.13}$$

and the mass balance is given as:

$$FI_{lp} = FE1_{lp} + FE2_{lp} + FE3_{lp} - FG_{lp} \tag{B.14}$$

with:

$$FE1_{lpa} = FX_{fh3} \tag{B.15}$$

and:

$$FE1_{lpb} = FE1_{lpc} = FX_{fh2}\ /\ 2 \tag{B.16}$$

and:

$$FE2_{lpa} = FE2_{lpb} = FE2_{lpc} = FX_{fh1}\ /\ 3 \tag{B.17}$$

and finally:

$$FE3_{lpa} = FE3_{lpb} = FE3_{lpc} = FI_{con}\ /\ 3 \tag{B.18}$$

In the case of both high pressure and low pressure turbines, the exit enthalpies are obtained from the appropriate call to the property routine HFIND.

Other Components

For the reheater, the heat balance provides:

$$FX_{rht} = FE_{rht} \frac{HE_{rht} - HE_{sep}}{HE_{bwr} - HD_{rht}} \tag{B.19}$$

with $FI_{rht} = FE_{rht}$ and $FD_{rht} = FX_{rht}$ as the mass balance, recognizing that $FE_{rht} = FI_{lpa} + FI_{lpb} + FI_{lpc}$.

For the moisture separator, the heat balance gives:

$$FI_{sep} = FE_{sep} \frac{HE_{sep} - HD_{sep}}{HE2_{thp} - HD_{sep}} \tag{B.20}$$

and the mass balance is written as:

$$FD_{sep} = FI_{sep} - FE_{sep} \tag{B.21}$$

with $FE_{sep} = FI_{rht}$.

For the gland steam coolers, the heat balance gives:

$$FX2_{gsc} = FE_{gsc} \frac{HE_{gsc} - HE_{cep}}{HE_{bwr} - HD_{gsc}} - FX1_{gsc} \tag{B.22}$$

where $FX1_{gsc}$ is one of the operating variables to be specified by the User. The mass balance is $FE_{gsc} = FI_{fh1}$ and $FI_{gsc} = FE_{gsc}$.

For the condenser, the heat balance gives:

$$\begin{aligned} Q_{con} = {} & FI_{con} HE3_{lpc} + FB_{con} HE_{bwr} - FE_{con} HE_{con} \\ & + (FX2_{gsc} + FX1_{gsc})\, HD_{gsc} \end{aligned} \tag{B.23}$$

while the mass balance provides:

$$FI_{con} = FE_{con} - FX1_{gsc} - FX2_{gsc} - FB_{con} \tag{B.24}$$

with:

$$FB_{con} = FE_{con} \frac{ZB_{con}}{100} \tag{B.25}$$

and ZB_{con} is the opening of the condenser bypass valve.

For the generator, the total turbine work is calculated as:

$$W_t = W_{thp} + W_{lpa} + W_{lpb} + W_{lpc} \tag{B.26}$$

For the reactor, the thermal output is calculated as:

$$Q_{bwr} = FI_{bwr}\, (HE_{bwr} - HE_{fh5}) \tag{B.27}$$

As a check on the overall heat balance one notes that:

$$Q_{bwr} = W_{tur} + Q_{con} - W_{bfp} - W_{cep} \tag{B.28}$$

where the pump work terms are calculated as:

$$W_{bfp} = FE_{bfp}\, (HE_{bfp} - HE_{fh3}) \tag{B.29}$$

$$W_{cep} = FE_{cep}\, (HE_{cep} - HE_{con}) \tag{B.30}$$

As a check on the overall mass balance one has:

$$\begin{aligned} FE_{bwr} = {} & FI_{thp} + FX_{rht} + FG_{thp} + FG_{lpa} + FG_{lpb} \\ & + FG_{lpc} + +FX1_{gsc} + FX2_{gsc} + FB_{con} \end{aligned} \tag{B.31}$$

B.3 Special Models

The fouling of the reheater is modelled as:

$$HE_{rht} = HE_{sep} + (HSUP(TE_{rht},\ PE_{rht}) - HE_{sep})\ \frac{(100 - ZF_{rht})}{100} \quad \text{(B.32)}$$

One observes that when $ZF_{rht} = 100\%$ (full fouling) then $HE_{rht} = HE_{sep}$ and consequently $FX_{rht} = 0$. One requires an additional equation to obtain the *calculated* reheater exit temperature based upon this new condition:

$$TE^{C}_{rht} = TFIND(PE_{rht},\ HE_{rht}) \quad \text{(B.33)}$$

For the fouling of the drain cooler of FH5, one obtains a *calculated* value for the drain temperature:

$$TD^{C}_{fh5} = TD_{fh5} + (TS_{fh5} - TD_{fh5})\ \frac{ZF_{fh5}}{100} \quad \text{(B.34)}$$

One observes that for $ZF_{fh5} = 100$ % (full fouling), $TD^{C}_{fh5} = TS_{fh5}$ which is the highest possible temperature for TD_{fh5}.

For the throttling of FH5's main extraction line together with the fouling of the main cooler of FH5:

$$TE^{C}_{fh5} = TE^{MIN}_{fh5} + (TE_{fh5} - TE^{MIN}_{fh5})\ \frac{(ZX_{fh5} - ZF_{fh5})}{100} \quad \text{(B.35)}$$

where the *minimum* possible exit temperature is calculated as:

$$TE^{MIN}_{fh5} = TFIND(PE_{bfp},\ HE_{fh4} + \frac{FX2_{fh5}}{FE_{fh5}}\ (HD_{rht} - HD_{fh5})) \quad \text{(B.36)}$$

For $ZX_{fh5} = 0$ % (valve closed) or $ZF_{fh5} = 100$ % (full fouling), one has $TE^{C}_{fh5} = TE^{MIN}_{fh5}$. In addition, one recognizes that $TE^{MIN}_{fh5} \neq TE_{fh4}$ (that is, no temperature rise in FH5) due to the non-zero extraction steam flow from the reheater drain to this heater.

C. Program Documentation

One of the problems associated with many expert systems programs is the difficulty in documenting the software; one cannot obtain a listing of variables or a program listing within G2.

Table C.1 lists the *unnamed* workspaces of the program. They are all subworkspaces to the specified locations. The "zoom" displays for an object can be found as subworkspaces to the object.

Table C.2 lists the *named* workspaces of the program.

Data Input

There is no formal facility for the input of data files within G2. In order to input the sensor data the *conclude* command within an *action-button* object is used as illustrated in Figure C.1.

In order to input a new data set, the User should *clone* one of the existing action-buttons and edit the conclude commands accordingly.

Renaming of Variables

There are two ways to rename attributes and objects within G2. The first approach uses the *inspect* facility. For example, *replace GC with GSC in every item.* This method is well structured in that it informs the User of the number and location of the changes. The second approach uses the *change* option within an object definition. For example, *rename attribute TE to TEC.* This method must be used with caution as it does not change every instance of the attribute. The User must inspect every simulation equation manually to ensure complete compliance.

Table C.1 List of *unnamed* workspaces

Location	Workspace Contents
Assumption definition	Rules for calculation of failure-likelihoods
Connection definition	Rules for calculation of dependencies
Equation definition	Rules for calculation of satisfaction values
Model-fault definition	Rules for the model-fault object
Model-input definition	Rules for the model-input object
Model-sensor definition	Rules for the model-sensor object

Table C.2 List of named workspaces

Name	Workspace Contents
Acknowledged-Messages	Message workspace for economics rules
Diagnostics-Flow	DMP analysis for feedwater flow
Diagnostics-Temp	DMP analysis for feedwater heater
Economics	Economics analysis screen
Help-Welcome	Introductory-help screen for BARSE
HP-Heaters	Sub-system display for HP-Heaters
HP-Turbines	Sub-system display for HP-Turbines
ISA-Icons	G2 ISA object library
Logged-Messages	Message workspace for economics rules
LP-Heaters	Sub-system display for LP-Heaters
LP-Turbines	Sub-system display for LP-Turbines
Menu-Data	Menu to access Input Data workspaces
Menu-Developer	Menu to access various Developer workspaces
Menu-Diagnostics	Menu to access various Diagnostic workspaces
Menu-Main	Main menu that appears at top of the screen
Menu-Systems	Menu to access the Sub-system workspaces
Message-Board	G2 standard workspace
Object-Libary	All object definitions used by BARSE
Reference	Plots used for economics analysis
Rules-Libary	Miscellaneous rules for economic analysis
Schematic	Cycle Schematic, contains all model equations
Steam-properties	Function definitions for external properties
Test-Bargraph	Test workspace for bargraph display
Test-Custom	Test workspace for custom readouts
Test-Flow	Test workspace for flow diagnostics
Test-Halden	Illustration of Halden EFD interface
Test-Network	Test workspace for flow DMP network
The-input	Input Data workspace
TS-diagram	TS-diagram workspace
Variables	Gives the attribute tables for all objects
Welcome	Title screen for BARSE

an action-button	
Label	'Recent'
Action	in order hide this workspace and conclude that the Ng of gen = 96.7 and conclude that the Wm of gen = 614.0 and conclude that the Tem of fh5 = 183 and conclude that the Ts of fh5 = 186.5 and conclude that the Tdm of fh5 = 163.3 and conclude that the Te of fh4 = 153.5 and conclude that the Ts of fh4 = 155.6 and conclude that the Td of fh4 = 123.5 and conclude that the Te of fh3 = 110.5 and conclude that the Ts of fh3 = 115 and conclude that the Td of fh3 = 98 and conclude that the Te of fh2 = 89.5 and conclude that the Ts of fh2 = 96.7 and conclude that the Td of fh2 = 71 and conclude that the Te of fh1 = 60.5 and conclude that the Ta of fh1 = 62 and conclude that the Td of fh1 = 61.7 and conclude that the Fm of bfp = 905 and conclude that the Te of bfp = 111.8 and conclude that the Pe of bfp = 78 and conclude that the Fm of dcp = 355 and conclude that the Te of dcp = 68.9 and conclude that the Fm of cep = 550 and conclude that the Te of cep = 33.5 and conclude that the Pe of cep = 15 and conclude that the Fx1 of gsc = 0.96 and conclude that the Td of gsc = 70 and conclude that the Te of gsc = 35.5 and conclude that the Pi of con = 46 and conclude that the Tcw of con = 7.0 and conclude that the nt3 of lpc = 80.7 and conclude that the nt1 of lpb = 86.2 and conclude that the Pe1 of lpb = 0.95 and conclude that the nt2 of lpb = 81.6 and conclude that the Pe2 of lpb = 0.243 and conclude that the nt1 of lpa = 100.0 and conclude that the Tm1 of lpa = 115 and conclude that the Pe1 of lpa = 1.8 and conclude that the nt1 of thp = 71.8 and conclude that the Pe1 of thp = 12.7 and conclude that the nt2 of thp = 75.3 and conclude that the Pe2 of thp = 6.3 and conclude that the Tem of rht = 245 and conclude that the Pe of rht = 6.2 and conclude that the Td of rht = 278.0 and conclude that the Ye of sep = 0.37 and conclude that the Td of sep = 160.6 and conclude that the Pe of bwr = 61.8 and conclude that the Ye of bwr = 0.54 and conclude that the fe of fh5 = the Fm of bfp and change the text of every label to ' Recent 611 MW 24/3/90'
Action priority	2

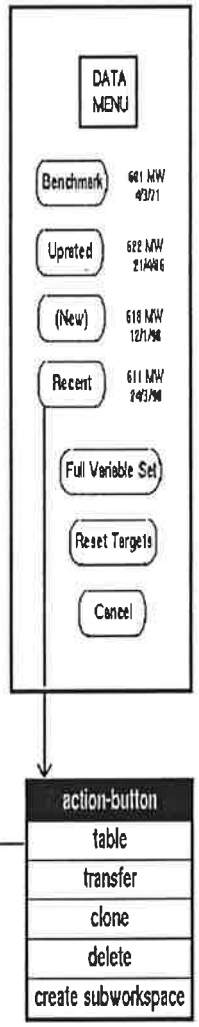

Figure C.1 Method of data input within an Action button.