LUND UNIVERSITY

# High-speed carrier-envelope phase drift detection of amplified laser pulses

Fordell, Thomas; Miranda, Miguel; Arnold, Cord; L'Huillier, Anne

*Published in:*
Optics Express

*DOI:*
10.1364/OE.19.023652

2011

Link to publication

*Citation for published version (APA):*
Fordell, T., Miranda, M., Arnold, C., & L'Huillier, A. (2011). High-speed carrier-envelope phase drift detection of amplified laser pulses. *Optics Express*, *19*(24), 23652-23657. https://doi.org/10.1364/OE.19.023652

*Total number of authors:*
4

**General rights**
Unless other specific re-use rights are stated the following general rights apply:
Copyright and moral rights for the publications made accessible in the public portal are retained by the authors and/or other copyright owners and it is a condition of accessing publications that users recognise and abide by the legal requirements associated with these rights.
• Users may download and print one copy of any publication from the public portal for the purpose of private study or research.
• You may not further distribute the material or use it for any profit-making activity or commercial gain
• You may freely distribute the URL identifying the publication in the public portal

Read more about Creative commons licenses: https://creativecommons.org/licenses/

**Take down policy**
If you believe that this document breaches copyright please contact us providing details, and we will remove access to the work immediately and investigate your claim.

LUND UNIVERSITY

PO Box 117
221 00 Lund
+46 46-222 00 00

# High-speed carrier-envelope phase drift detection of amplified laser pulses

**T. Fordell,* M. Miranda, C. L. Arnold, and A. L'Huillier**

*Department of Physics, Lund University,*
*P.O. Box 118, 22100 Lund, Sweden*

*thomas.fordell@fysik.lth.se

**Abstract:** An instrument for measuring carrier-envelope phase (CEP) drift of amplified femtosecond laser pulses at repetition rates up to the 100-kHz regime is presented. The device can be used for real-time pulse labeling and it could also enable single-loop CEP control of future high-repetition rate laser amplifiers. The scheme is demonstrated by measuring the CEP drift of a 1-kHz source.

© 2011 Optical Society of America

**OCIS codes:** (320.7090) Ultrafast lasers; (140.3425) Laser stabilization; (120.5050) Phase measurement.

## References and links

1. D. J. Jones, S. A. Diddams, J. K. Ranka, A. Stentz, R. S. Windeler, J. L. Hall, and S. T. Cundiff, "Carrier-envelope phase control of femtosecond modelocked lasers and direct optical frequency synthesis," Science **288**, 635–639 (2000).
2. A. Polonski, A. Poppe, G. Tempea, Ch. Spielmann, Th. Udem, R. Holzwarth, T. W. Hänsch, and F. Krausz, "Controlling the phase evolution of few-cycle light pulses," Phys. Rev. Lett. **85**, 740–743 (2000).
3. G. Sansone, E. Benedetti, F. Calegari, C. Vozzi, L. Avaldi, R. Flammini, L. Poletto, P. Villoresi, C. Altucci, R. Velotta, S. Stagira, S. De Silvestri, and M. Nisoli, "Isolated single-cycle attosecond pulses," Science **20**, 443–446 (2006).
4. E. Goulielmakis, M. Schultze, M. Hofstetter, V. S. Yakovlev, J. Gagnon, M. Uiberacker, A. L. Aquila, E. M. Gullikson, D. T. Attwood, R. Kienberger, F. Krausz, and U. Kleineberg, "Single-cycle nonlinear optics," Science **20**, 1614–1617 (2008).
5. O. D. Mücke, O. Kuzucu, F. N. C. Wong, E. P. Ippen, F. X. Kärtner, S. M. Foreman, D. J. Jones, L.-S. Ma, J. L. Hall, and J. Ye, "Experimental implementation of optical clockwork without carrier-envelope phase control," Opt. Lett. **29**, 2806–2808 (2004).
6. S. Gilbertson, S. D. Khan, Y. Wu, M. Chini, and Z. Chang, "Isolated attosecond pulse generation without the need to stabilize the carrier-envelope phase of driving lasers," Phys. Rev. Lett. **105**, 093902 (2004).
7. S. T. Cundiff, "Phase stabilization of ultrashort optical pulses," J. Phys. D: Appl. Phys. **35**, R43–R59 (2002).
8. Y. S. Lee, J. H. Sung, C. H. Nam, T. J. Yu, and K.-H. Hong, "Novel method for carrier-envelope phase stabilization of femtosecond laser pulses," Opt. Express **13**, 2969–2976 (2005).
9. S. Koke, C. Grebing, H. Frei, A. Anderson, A. Assion, and G. Steinmeyer, "Direct frequency comb synthesis with arbitrary offset and shot-noise limited phase noise," Nat. Photonics **4**, 462–465 (2005).
10. P. A. Roos, L. Xiaoqin, R. P. Smith, J. A. Pipis, T. M. Fortier, and S. T. Cundiff, "Solid-state carrier-envelope phase stabilization via quantum interference control of injected photocurrents," Opt. Lett. **30**, 735–737 (2005).
11. K. Osvay, M. Görbe, C. Grebing, and G. Steinmeyer, "Bandwidth-independent linear method for detection of the carrier-envelope offset phase," Opt. Lett. **32**, 3095–3097 (2007).
12. A. Baltuška, Th. Udem, M. Uiberacker, M. Hentschel, E. Goulielmakis, Ch. Gohle, R. Holzwarth, V. S. Yakovlev, A. Scrinzi, T. W. Hänsch, and F. Krausz, "Attosecond control of electronic processes by intense light fields," Nature **421**, 611–615 (2003).
13. M. Kakehata, H. Takada, Y. Kobayashi, K. Torizuka, Y. Fujihira, T. Homma, and H. Takahashi, "Single-shot measurement of carrier-envelope phase changes by spectral interferometry," Opt. Lett. **26**, 1436–1438 (2001).
14. S. Koke, C. Grebing, B. Manschwetus, and G. Steinmeyer, "Fast f-to-2f interferometer for a direct measurement of the carrier-envelope phase drift of ultrashort amplified laser pulses," Opt. Lett. **33**, 2545–2547 (2008).

#150427 - $15.00 USD Received 5 Jul 2011; revised 22 Aug 2011; accepted 24 Aug 2011; published 7 Nov 2011

15. K. Kress, T. Löffler, M. D. Thomson, R. Dörner, H. Gimpel, K. Zrost, T. Ergler, R. Moshammer, U. Morgner, J. Ullrich, and H. G. Roskos, "Determination of the carrier-envelope phase of few-cycle laser pulses with terahertz-emission spectroscopy," Nat. Phys. **2**, 327–331 (2006).
16. C. A. Haworth, L. E. Chipperfield, P. L. Knight, J. P. Marangos, and J. W. G. Tisch, "Half-cycle cutoffs in harmonic spectra and robust carrier-envelope phase retrieval," Nat. Phys. **3**, 52–57 (2007).
17. T. Wittmann, B. Horvath, W. Helmi, M. G. Schätzel, X. Gu, A. L. Cavalieri, and G. G. Paulus, "Single-shot carrier-envelope phase measurement of few-cycle laser pulses," Nat. Phys. **5**, 357–362 (2009).
18. A. M. Sayler, T. Rathje, W. Müller, K. Rühle, R. Kienberger, and G. G. Paulus, "Precise, real-time, every-single-shot, carrier-envelope phase measurement of ultrashort laser pulses," Opt. Lett. **36**, 1–3 (2011).
19. T. Fordell, M. Miranda, A. Persson, and A. L'Huillier, "Carrier-envelope phase stabilization of a multi-millijoule, regenerative-amplifier-based chirped-pulse amplifier system," Opt. Express **17**, 21091–21097 (2009).
20. C. Li, E. Moon, H. Wang, H. Mashiko, C. M. Nakamura, J. Tackett, and Z. Zhang, "Determining the phase-energy coupling coefficient in carrier-envelope phase measurements," Opt. Lett. **32**, 796–798 (2007).
21. H. Wang, M. Chini, E. Moon, H. Mashiko, C. Li, and Z. Chang, "Coupling between energy and phase in hollow-core fiber based f-to2f interferometers," Opt. Express **17**, 12082–12089 (2009).
22. H. Wang, C. Li, J. Tackett, H. Mashiko, C. M. Nakamura, E. Moon, and Z. Zhang, "Power-locking of high-repetition rate chirped-pulse amplifiers," Appl. Phys. B **89**, 275–279 (2007).
23. A. Guandalini, P. Eckle, M. Anscombe, P. Schlup, J. Biegert, and U. Keller, "5.1 fs pulses generated by filamentation and carrier envelope phase stability analysis," J. Phys. B: At. Mol. Opt. Phys. **39**, S257–S264 (2006).

## 1. Introduction

The ability to stabilize and control the phase slip of the carrier wave under the pulse envelope in femtosecond oscillators has become a crucial part of time and frequency metrology since it provides a straightforward, and elegant, way to link the radio frequency domain coherently to the optical frequency domain, and vice versa [1, 2]. Moreover, phase stable amplification of these carrier-envelope-phase-stable pulses has revolutionized ultrafast science by enabling the production of isolated attosecond XUV pulses [3, 4]. While optical clockwork as well as single attosecond XUV pulses without the need to control the carrier-envelope phase (CEP) have both been recently demonstrated [5, 6], CEP stabilization and control has become, and will remain, a fundamental feature of modern femtosecond laser systems.

Different techniques have been developed to detect CEP drift and even its absolute value. The standard way to detect CEP drift is to first generate an octave spanning spectrum via supercontinuum generation and then to monitor the interference between the fundamental spectrum and its second harmonic in a so called f-to-2f interferometer. In laser oscillators, a narrow spectral region is filtered out and detected with a photodiode. Typically, a phase-locked loop is then used to lock the signal from the photodiode (the 'beat note') to one quarter of the pulse repetition rate by modulating the pump power or by tilting a mirror in a prism based intra-cavity dispersion compensator. Such a scheme locks the phase slip from pulse to pulse to $\pi/4$ [7]. The photodiode signal can also be used to directly modulate the pump power [8] or to drive an acousto-optic modulator external to the laser cavity [9]. In addition to the f-to-2f scheme, semiconductor-based solutions also exist for generating the beat note [10]. CEP detection at low power levels and narrow bandwidths can be done using linear interferometry [11].

Once the oscillator has been stabilized, high-power CEP-stable pulses can be produced by properly selecting the pulses to be amplified. During amplification, a slow drift of the CEP usually occurs, and this needs to be corrected by a second feedback loop, the slow loop [12]. Here again, an f-to-2f interferometer is usually employed but with a spectrometer instead of a photodiode [13]. A computer then monitors the interference fringes in the spectrum and computes a correction to be fed back into the laser system. Such a measurement with data transfer from a spectrometer to a computer is slow and plagued with high latencies, but this is normally not a problem since only a few hertz of bandwidth is needed for the slow loop to perform well; however, this means that the phase of only a fraction of the pulses can be recorded for high-repetition-rate laser systems. In [14], the spectrometer in such an f-to-2f interferometer was

#150427 - $15.00 USD Received 5 Jul 2011; revised 22 Aug 2011; accepted 24 Aug 2011; published 7 Nov 2011
(C) 2011 OSA

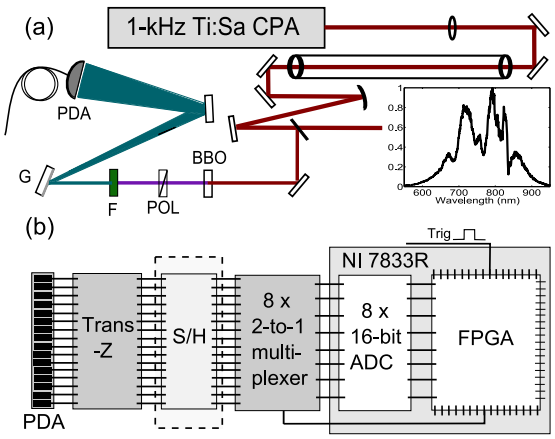


Fig. 1. (a) Experimental setup. POL: polarizer; F: short pass filter; G: grating; PDA: photodiode array. A spectrum of the hollow fiber output is also shown. (b) Electronics for signal processing. Trans-Z: transimpedance amplifier; ADC: analog to digital converter.

replaced by two photomultiplier tubes in quadrature, which meant that the relative CEP could be determined unambiguously in a $]-\pi/2,\pi/2[$ interval at multi-kHz repetition rates.

The absolute CEP can be measured with techniques based on, e.g., THz emission [15], half-cycle cutoffs in high-harmonic spectra [16] and above-threshold ionization [17]. Recently, using above-threshold ionization, single-shot CEP measurements with very low latency (20 µs) was demonstrated [18].

This letter presents a scheme for measuring the relative CEP at high pulse repetition rates and with latencies in the µs regime. The method is especially designed to be used with hollow-fiber pulse compressors and it is based on the traditional f-to-2f technique, which is simple to implement, robust and offers a visually clear picture of the phase stability (the jitter of the spectral fringe pattern). Here, the spectrometer normally used is replaced by a grating that disperses an octave spanning spectrum onto a photodiode array. A field-programmable gate-array (FPGA, NI PCI-7833R) is then used to calculate, in real time, the CEP from the measured interference pattern. An FPGA based approach for fringe pattern analysis has several advantages compared to other solutions, including straightforward graphical programming (NI Labview) that results in high-speed task-dedicated electronic hardware, fast data transfer to the host computer as well as a (built-in) graphical user interface.

## 2. Experimental setup and results

The test setup is illustrated in Fig. 1a. CEP-stable pulses from a 30-fs, 1-kHz chirped-pulse amplifier (CPA) system [19] are spectrally broadened in a hollow fiber. After collimation of the beam but before dispersion compensation by double chirped mirrors, a reflection off an uncoated glass plate is used to pick off a sample of the beam for CEP measurement ($<$10 µJ). The octave spanning spectrum (about 5 fs transform limit) is then doubled in a nonlinear crystal (0.5-mm BBO), spectrally filtered (short pass), and angularly dispersed by a grating (1800 grooves/mm, 500-nm blaze) before hitting a 16-element photodiode array (PDA, Hamamatsu S4111-16R). Optical alignment of the detector is very easy since the interference fringes used to detect CEP drift are even visible to the naked eye. The photocurrents from the PDA (Fig. 1b) are then amplified by a transimpedance amplifier (16 channels) and multiplexed down to 8 parallel lines before being digitized (ADC, 8x200 kS/s) and processed by the FPGA. A sample-and-

#150427 - $15.00 USD Received 5 Jul 2011; revised 22 Aug 2011; accepted 24 Aug 2011; published 7 Nov 2011
(C) 2011 OSA

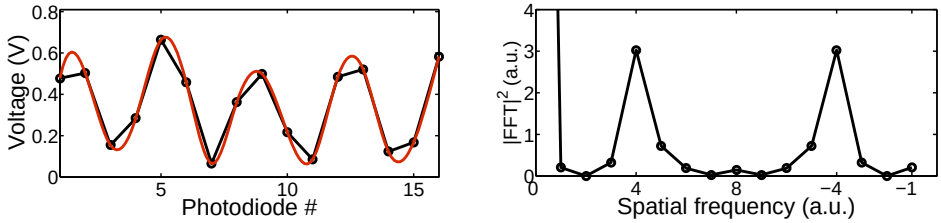


Fig. 2. (a) Raw data of the interference pattern on the PDA (circles) with piecewise linear (black) and spline (red) interpolations. (b) Double-sided complex Fourier transform of the raw data in (a). The CEP is given by the phase of the Fourier component at position 4.

hold (S/H) circuit can be inserted before the analog multiplexer to make sure that the signal does not change during digitization. In this work, for simplicity, a S/H circuit was not used; instead, the first 8 channels were digitized on the rising slope while the rest were digitized on the descending slope (at equal magnitudes). In the FPGA, a 16-point fast-Fourier-transform (FFT) is computed and the phase of the relevant Fourier component is extracted, unwrapped and transferred via a buffer to the PC for storage. The time required for this process, excluding the rise time of the PDA and the amplifier, is around 14 µs and is mostly limited by the analog to digital conversion (ADC) (2x4 µs) and multiplexing (3 µs). Interference patterns can be continuously read, analyzed and the data saved at pulse repetition rates up to 70 kHz. If only the first 8 channels are used, the latency drops to around 7 µs and the maximum trigger rate goes up to 200 kHz.

The current proof-of-principle setup is limited to about 50 kHz by the response of the transimpedance amplifier; however, the rise time of the PDA is well below 1 µs and permits, with an improved amplifier, very high pulse rates. A proportional-integral-derivative (PID) controller is also programmed into the FPGA and can be run in parallel to the above signal processing in order to provide rapid feedback to a (future) high-repetition-rate laser system. Fig. 2a shows a typical interference pattern measured at 460 nm with the setup in Fig. 1; the open circles are the actual data points and the black and red lines are piecewise linear and spline interpolations, respectively. The corresponding spectrum from which the CEP is extracted is shown in Fig. 2b. The interference signal at 460 nm is surprisingly good considering the relatively narrow spectrum shown in the inset in Fig. 1. Clearly, the spectrum from the fiber has broad wings.

Some care has to be taken when extracting the phase from such a short data set. Computer simulations show that the relation between the computed phase and the actual phase is slightly nonlinear due to the low number of points used for the FFT. This nonlinearity can go up to 100 mrad, but it can be reduced by windowing the data. Window functions that go to zero at the edges should be avoided since they cut away much of the interesting signal; hence, e.g. a Hamming window, or variations thereof, is recommended. A Hamming window will reduce the nonlinearity to approximately 10 mrad, which is negligible in most cases. Furthermore, a short data set means that the extracted phase becomes more sensitive to noise in the signal. Again, simulations show that this level of sensitivity is acceptable: for example, a noisy signal with 20% noise in each data point and with a randomly varying background level (random offset and random slope, both varying in an interval equal in amplitude to the amplitude of the signal) will together produce a jitter of around 60 mrad and 100 mrad for 16 and 8 channels, respectively. If a more noise resilient detection is required, the number of data points must be increased. For example, a 32 cell PDA with 4-to-1 multiplexers and S/H circuits would still yield latencies of only a few tens of µs. Sub-10 µs latencies could be obtained by updating to the latest multifunction FPGA modules that require only 1 µs for the ADC.

#150427 - $15.00 USD Received 5 Jul 2011; revised 22 Aug 2011; accepted 24 Aug 2011; published 7 Nov 2011
(C) 2011 OSA

To check the noise level of the detector, the phase of an artificial, static pattern was measured (flash lamp + transmission grating). With a signal level comparable to that in Fig. 2a, a root-mean-square (RMS) phase jitter of a few mrad was measured even when the FPGA was triggered at 200 kHz. The dominant source of this phase noise is the analog-to-digital converter, which produces an RMS noise level of nearly 2 mV per sample per channel. The photon shot noise is an order of magnitude smaller due to the large amounts of photons available from the hollow fiber ($>10^6$/pulse/photodiode). Adding a low-noise amplifier in front of the ADC and/or increasing the beam intensity can be used to reduce the relative contribution of the ADC quantization noise and to push the detector noise level into the sub-mrad regime.

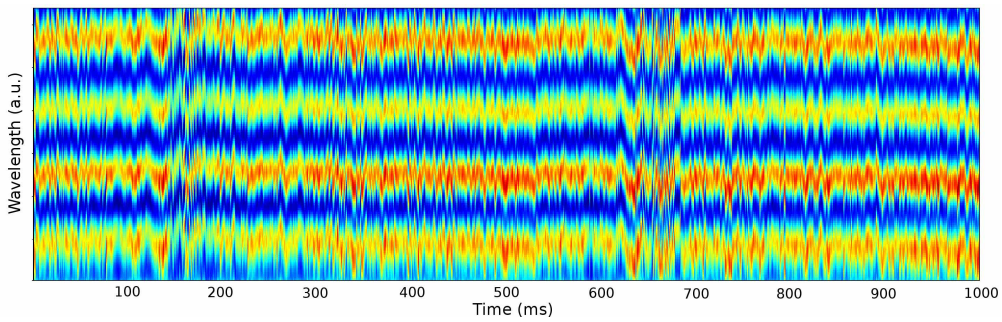


Fig. 3. A short excerpt of 1000 consecutive interference patterns recorded at 1 kHz with only the oscillator being locked. For visual clarity, a spline interpolation as in Fig. 2a has been done for each pulse.

Fig. 3 shows a traditional view of the fringe pattern around 460 nm of 1000 consecutive laser pulses recorded at 1 kHz with only the oscillator being locked (no slow loop). The data is a short excerpt from a much longer data set. At such a low repetition rate, the computed CEP as well as all of the raw data can easily be transferred and saved continuously to the host computer. If triggered above 30 kHz or so, only the CEP can be continuously transferred and saved. Three distinct features from this short excerpt can be seen: the pulse-to-pulse jitter, the slow drift due to only the oscillator being locked, and the large disturbances at 150 ms and 650 ms caused by vibrations of the cryogenic cooler unit that operates at 2 Hz and cools the Ti:Sa crystal in the multipass amplifier. The RMS CEP jitter in Fig. 3 is around 600 mrad. This value should only be used to get an idea of the scale of the CEP fluctuations. With also the slow feedback loop running, the phase jitter in front of the fiber as measured with a commercial f:2f interferometer (APS800) was around 450 mrad [19]. It must be emphasized that these numbers should not be compared to each other for several reasons, one obvious reason being the slow loop. More importantly, it is still unclear exactly how, e.g., beam pointing and pulse energy fluctuations, are coupled to measured and true CEP fluctuations in different setups. The method proposed here measures the pulses as they exit the hollow fiber and are sent to the experiment, which means that a considerable part of the measured CEP jitter arising from such effects should reflect true changes of the CEP in the hollow fiber and not just artifacts of the measurement, which is the case when the measurement is done in front of the fiber.

The f:2f technique is well known to interpret pulse energy fluctuations as CEP fluctuations. This coupling has been estimated in [20] to be around 160 mrad for every 1 per cent change in pulse energy for traditional f:2f interferometers based on white light generation in sapphire. A value of 120 mrad has been measured for a hollow fiber setup [21]. In this work, the energy fluctuations in front of the fiber were below 1 per cent. Consequently, energy fluctuations are of minor importance for the results presented here; however, for a laser with better CEP stability,

#150427 - $15.00 USD Received 5 Jul 2011; revised 22 Aug 2011; accepted 24 Aug 2011; published 7 Nov 2011
(C) 2011 OSA

pulse energy fluctuations can become an issue. In a feedback loop, the detrimental effect of energy fluctuations can be reduced by averaging over a few pulses. If the CEP of the laser is not stabilized, that is, if the pulses are only labeled by their CEP, then the averaging must be done during data analysis. But this only means that more shots must be recorded than what would otherwise be necessary. Active stabilization of the pulse energy can also be employed [22]. Another approach would be to measure the pulse energy simultaneously with the CEP. After a calibration of the coupling strength has been performed, real-time compensation of this effect can easily be performed by the FGPA. Finally, the coupling can probably also be reduced by having a broader white light continuum [23].

Up to a few tens of kHz the signal level from the photodiode array should not be a problem, after all, a $45^o$ s-polarized reflection off an uncoated glass surface (R$\approx$ 1.5%) provided sufficient signal in this work; however, when going towards 100 kHz and possibly above, a broader spectrum combined with an improved transimpedance amplifier will be needed in addition to an increase of the beam split-off ratio.

## 3. Conclusion

In conclusion, an instrument for fast CEP measurement of amplified femtosecond pulses has been presented. Spectral broadening of the input pulses was done in a hollow-core fiber, which is, along with CEP measurement and stabilization, a crucial component in many laboratories at the forefront of ultrafast science where single attosecond XUV pulses are produced via high-harmonic generation. The device presented can be used for real-time pulse labeling and rapid feedback for single-loop CEP stabilization at pulse repetition rates up to the 100-kHz regime.

#150427 - $15.00 USD Received 5 Jul 2011; revised 22 Aug 2011; accepted 24 Aug 2011; published 7 Nov 2011
(C) 2011 OSA