LUND UNIVERSITY

Immuno-modulatory functions of CD1d-restricted natural killer T cells

Berntman, Emma

2006

Link to publication

Citation for published version (APA):
Berntman, E. (2006). *Immuno-modulatory functions of CD1d-restricted natural killer T cells*. [Doctoral Thesis (compilation), Department of Experimental Medical Science]. Emma Berntman, Department of Experimental Medical Science.

Total number of authors:
1

General rights
Unless other specific re-use rights are stated the following general rights apply:
Copyright and moral rights for the publications made accessible in the public portal are retained by the authors and/or other copyright owners and it is a condition of accessing publications that users recognise and abide by the legal requirements associated with these rights.
• Users may download and print one copy of any publication from the public portal for the purpose of private study or research.
• You may not further distribute the material or use it for any profit-making activity or commercial gain
• You may freely distribute the URL identifying the publication in the public portal

Read more about Creative commons licenses: https://creativecommons.org/licenses/

Take down policy
If you believe that this document breaches copyright please contact us providing details, and we will remove access to the work immediately and investigate your claim.

LUND UNIVERSITY

PO Box 117
221 00 Lund
+46 46-222 00 00

AVDELNINGEN FÖR IMMUNOLOGI, INSTITUTIONEN FÖR EXPERIMENTELL MEDICINSK VETENSKAP, MEDICINSKA FAKULTETEN, LUNDS UNIVERSITET

IMMUNO-MODULATORY FUNCTIONS OF CD1d-RESTRICTED NATURAL KILLER T CELLS

EMMA BERNTMAN

AKADEMISK AVHANDLING

SOM MED VEDERBÖRLIGT TILLSTÅND AV MEDICINSKA FAKULTETEN VID LUNDS UNIVERSITET FÖR AVLÄGGANDE AV DOKTORSEXAMEN I MEDICINSK VETENSKAP KOMMER ATT OFFENTLIGEN FÖRSVARAS TORSDAGEN DEN 14 SEPTEMBER 2006 KL 9.00 I SEGERFALKSALEN, BMC, SÖLVEGATAN 19, LUND

HANDLEDARE: DOCENT SUSANNA L CARDELL

FAKULTETSOPPONENT: DOCENT MARIANNE QUIDING-JARBRINK

AVDELNINGEN FÖR MIKROBIOLOGI OCH IMMUNOLOGI, GÖTEBORGS UNIVERSITET

DIVISION OF IMMUNOLOGY, DEPARTMENT OF EXPERIMENTAL MEDICAL SCIENCE,
FACULTY OF MEDICINE, LUND UNIVERSITY

IMMUNO-MODULATORY FUNCTIONS OF CD1d-RESTRICTED NATURAL KILLER T CELLS

EMMA BERNTMAN

THIS THESIS WILL BE DEFENDED ON
THURSDAY THE 14TH OF SEPTEMBER 2006 AT 9.00 AM
IN SEGERFALKSALEN, BMC, SÖLVEGATAN 19, LUND

SUPERVISOR: ASSOCIATE PROFESSOR SUSANNA L CARDELL
FACULTY OPPONENT: ASSOCIATE PROFESSOR MARIANNE QUIDING-JARBRINK
SECTION FOR MICROBIOLOGY AND IMMUNOLOGY, GÖTEBORG UNIVERSITY

PRINTED BY MEDIA-TRYCK, LUND
©EMMA BERNTMAN 2006
ISBN 91-628-6927-2
ISSN 1652-8220
2006:120

COVER PICTURE: INVISIBILITY by PEM

TILL PAPPA

TABLE OF CONTENTS

TABLE OF CONTENTS 1

ORIGINAL PAPERS 4

ABBREVIATIONS 5

GENERAL INTRODUCTION OF THE IMMUNE SYSTEM 7

DESCRIPTION OF NON-CONVENTIONAL B AND T LYMPHOCYTES 10

Marginal zone B cells 10

B1 B cells 11

CD8αα αβT cells 11

γδT cells 12

CHARACTERISTICS OF NK CELLS 13

INTRODUCTION TO NKT CELLS 15

THYMIC DEVELOPMENT OF T CELLS AND NKT CELLS 18

Development of T cells 18

Development of NKT cells 19

CD1d, THE ANTIGEN PRESENTING MOLECULE OF NKT CELLS 24

Antigen recognition by B cells and T cells 24

The CD1 family 24

Structure and expression pattern of CD1d 25

Evolutionary conservation of CD1 and NKT cell reactivity 26

LIGANDS PRESENTED ON CD1D 27

The first identified NKT cell ligand 27

NKT cells recognize endogenous ligands 28

NKT cells recognize exogenous ligands derived from bact. and paras. 29

FUNCTIONAL CAPACITY OF NKT CELLS 30

Production of Cytokines and proliferation 30

Apoptosis and receptor down-modulation 31

Cytotoxicity 32

WAYS OF ACTIVATING NKT CELLS 33

TCR and co-stimulatory receptors 33

NK-receptors 33

Toll like receptors 34

Cytokine stimulation 35

NKT CELL INTERACTIONS WITH IMMUNE CELLS 36
Reciprocal activation of and by dendritic cells 36
B cells as antigen presenting cells 36
Providing help for B cells 37
NKT cells rapidly activate NK cells 38
Modulating macrophage function 38
Recruitment of neutrophils 38
Indirect modulation of effector T cell function 39
Reciprocal activation of and by regulatory T cells 39
NKT CELL SUBSETS 40
Defining NKT cell subsets 40
dNKT and iNKT cells 41
Identification of dNKT and iNKT cells 41
Function of dNKT cells 42
Human iNKT cell subsets 43
NKT CELLS IN IMMUNOLOGICAL RESPONSES 44
Protective effects in autoimmune disorders 44
Mediating tolerance to foreign antigen 45
Beneficial and detrimental effects during tumor rejection 46
ROLE OF NKT CELLS DURING PATHOGEN INFECTIONS 48
Modulating immune responses during parasite infections 48
Protective effect in fungi infection 49
Diverse role during viral infections 49
Protective and detrimental effect on anti-bacteria immune responses 50
IMMUNE RESPONSES DURING *SALMONELLA* INFECTION 52

AIM OF THIS THESIS 54
THIS THESIS IN BRIEF 55
INTRODUCTION TO PAPERS I AND II 57
AIMS OF PAPERS I AND II 59
METHOD OF PAPERS I AND II 59
RESULTS AND DISCUSSION OF PAPERS I AND II 61
The relationship between NKT/CD4+ T cells and dNKT/iNKT cells 61
NKT cells over-expressed genes typical of non-conventional T lymph. 62
Transcription factors selectively associated with the NKT cell pop. 64

Activation and Regulation of NKT cells: expression of NK receptors 65
dNKT and iNKT cells differ in putative regulation by NK receptors 65
Expression of cytokine receptors by NKT cells 66
Migrational potential of NKT cells 67
Migrational potential of iNKT cells 67
Migrational potential of dNKT cells 68
Potential function of NKT cells 69
CONCLUDING REMARKS TO PAPERS I AND II 70

INTRODUCTION TO PAPER III 72
CHOICE OF METHOD FOR PAPER III 73
RESULTS AND DISCUSSION OF PAPER III 74
NKT cells were activated by the Salmonella infection 74
CD1d expression was modulated by Salmonella bacteria 75
The effect of NKT cells on the presence of immune cells and bact.load 76
The infection skews the cytokine production repertoire of NKT cells 77
CONCLUDING REMARKS TO PAPERS I AND II 79

ACKNOWLEDGEMENTS 80
POPULÄRVETENSKAPLIG SAMMANFATTNING 81
REFERENCES 84

ORIGINAL PAPERS

This thesis is based on the following original papers, which are referred to in the text by the roman numbers (I-III)

I. Gene expression signature of CD1d-restricted natural killer (NK) T cells. Emma Berntman, Martin Stenström, Emma Smith, Julia Rolf, Robert Månsson, Mikael Sigvardsson and Susanna L Cardell. *manuscript*

II. Molecular profiling of functionally distinct CD1d-restricted natural killer (NK) T cell subsets. Emma Berntman, Julia Rolf, Hanna Stenstad, Martin Stenström, William Agace, Mikael Sigvardsson and Susanna L Cardell. *manuscript*

III. The role of CD1d-restricted NK T lymphocytes in the immune response to oral infection with *Salmonella Typhimurium.* Emma Berntman, Julia Rolf, Cecilia Johansson, Per Anderson and Susanna L Cardell. *Eur. J. Immunol.* 2005. 35:2100-2109

Reprints were made with permission from the publisher

ABBREVIATIONS

ACAID	anterior chamber-associated immune deviation
AICD	activation induced cell death
αGalCer	α-Galactosyl Ceramide
APC	antigen presenting cell
Bcl	B-cell leukemia/lymphoma
BCR	B cell receptor
CCL	CC chemokine ligand
CCR	CC chemokine receptor
CD	cluster of differentiation
CFU	colony forming units
CLP	common lymphoid progenitors
CMV	murine cytomegalovirus
CXCL	CXC chemokine receptor
CXCR	CXC chemokine receptor
DAP	death associated protein
DC	dendritic cell
DETC	dendritic epidermal T cells
DN	double negative (for CD4 and CD8 expression)
dNKT	NKT cell with a non-invariant TCRα chain
DP	double positive (for CD4 and CD8 expression)
ECMV-D	diabetogenic encephalomyocarditis virus
EAE	experimental autoimmune encephalomyelitis
ER	endoplasmatic reticulum
FasL	Fas ligand
FynT	Fyn proto-oncogene
GITR	glucocorticoid-induced TNF receptor
GM-CSF	granulocyte-macrophage colony-stimulating factor
GTP	guanosine triphosphate
H-60	histocompatibility 60
HAS	heat stable antigen
HBV	hepatitis B virus
HSP65	65kDa heat shock protein
HSV-1	herpes simplex virus type 1
Id2	inhibitor of DNA binding 2
IFN	interferon
iGb3	isoglobotrihexosylceramide
IKK	inhibitor of NK-κB kinase
IL	interleukin
iNKT	NKT cell with an invariant TCRα chain
i.p.	intra-peritoneal
J	joining
KGF	keratinocyte growth factor
KIR	killer immunoglobulin-like receptors
Klr	killer cell lectin-like receptor
LCMV	lymphocytic choriomeningitis virus
LFA-1	lymphocyte function-associated antigen 1
LIGHT	is homologous to lymphotoxins (an acronym)
LN	lymph node
LPG	lipophosphoglycans

LPS	lipopolysaccharide
LT	lymphotoxin
LTβR	lymphotoxin β receptor
Ly49	lymphocyte antigen 49 complex
MAdCAM-1	mucosal vascular addressin cell adhesion molecule 1
MAPK	mitogen-activated protein kinase
MCP-1	monocyte chemoattractant protein-1
MHC	major histocompatability complex
MIC	MHC class I chain-related protein
MIP-2	macrophage inflammatory protein-2
MLN	mesenteric lymph nodes
mRNA	messenger ribonucleic acid
MS	multiple sclerosis
NPC1	Niemann-Pick Type C1 protein
NF-κB	nuclear factor of kappa light chain gene enhancer in B-cells
NIK	NF-κB inducing kinase
NK	natural killer cell
NKG2A	natural killer group protein 2
NKR-P1	natural killer cell receptor protein 1
NKT	natural killer T cell
NO	nitric oxide
NOD	non-obese diabetic mouse
PG	phosphatidylglycerol
PI	phosphatidylinositol
PIM_4	Phospatidylinositol mannoside
Pgrp	peptidoglycan recognition protein
PKC	protein kinase C
PP	Peyer's patches
pTα	pre-TCRα chain
Pta1	platelet and T cell activation antigen 1
RA	rheumatoid arthritis
RaeI	RNA export 1 homolog
RAG	recombination activating genes
RelB	avian reticuloendotheliosis viral (v-rel) oncogene related B
RNA	Ribonucleic acid
RSV	respiratory syncytial virus
SAP	SLAM-associated protein
SLAM	Signaling lymphocytic activation molecule
SLE	systemic lupus erythematosis
SP	single positive (generally for CD4 or CD8)
TCR	T cell receptor
T-bet	T-box expressed in T cells
TGF	transforming growth factor
Th1	T helper 1
Th2	T helper 2
TL	thymic leukemia antigen
TLR	toll like receptors
TNF	tumor necrosis factor
TRAIL	tumor necrosis factor-related apoptosis-inducing ligand
V	variable
VLA-4	very late antigen 4
UC	ulcerative colitis

GENERAL INTRODUCTION OF THE IMMUNE SYSTEM

The purpose of the immune system is to maintain host integrity in a competitive and often hostile environment. Outer threats come in numerous forms: bacteria, virus, fungi, parasites, and toxins. The immune system must launch powerful and efficient counter-measures to these threats while simultaneously retaining unequivocal acceptance of self in order to ensure host viability. Thus, it is imperative that the immune system can make several types of distinctions in order to function correctly, since an inability to distinguish between 1) foreign and self components could result in autoimmune disease, 2) dangerous and benign foreign elements could lead to allergies, and 3) normal and abnormal self components could result in development of cancer. Failure in any of these respects could be just as detrimental to the host as a failure to repel exogenous pathogens.

The immune system, which is a collective term of a broad range of defensive measures, can be divided into two branches: the innate and the adaptive immune system. These two branches function collaboratively for optimal protection of the host. Over time the immune system has evolved two fundamentally different ways of recognizing antigens. Cells belonging to the innate branch of the immune system use germ line encoded receptors that recognize a limited set of evolutionary conserved pathogen specific structures. This confers the ability to rapidly respond to threat, but without the option of adapting receptor-specificity in case the pathogen mutates. In contrast, B and T lymphocytes of the adaptive branch rearrange their antigen receptor genes, generating a receptor repertoire with the potential of recognizing not just a few evolutionary conserved antigens but an almost infinite number of antigens. Through a time-consuming mechanism, rearrangement bestows on the immune system the important capacity to adapt to mutating pathogens. Rearrangement is a prerequisite for developing a swifter and even more precise response upon a second encounter with the same antigen, a process termed immunological memory, which is a unique feature of adaptive immunity.

Innate immunity is comprised of mechanical barriers such as skin and mucosal membranes, anti-pathogenic soluble factors, inflammatory reactions preventing the spread of the pathogen during infection, and phagocytic cells such as neutrophils and macrophages. The innate immune system thus provides the first line of defence, reacting very rapidly and in many cases clearing the infection before the adaptive immune system is activated. During more serious infections, innate immune mechanisms limit pathogen spread and replication, giving the adaptive immune mechanisms time to develop fully and resolve the infection. The adaptive immune system is comprised of B and T lymphocytes as well as antigen presenting cells such as dendritic cells.

Interestingly, certain lymphocyte subpopulations display traits generally associated with innate immunity, instigating the term non-conventional or innate-like B and T lymphocytes. These cells express a restricted set of rearranged antigen receptors with unusually limited diversity and specificity, reminiscent of the innate receptors. Several of these receptors recognize self-structures of which many are associated with cellular stress. This is an uncommon specificity among adaptive immune cells, as self-reactive cells are generally eliminated to protect the host from autoimmune reactions. Another innate-like characteristic is the ability to respond robustly and very rapidly to antigen, in part due to low activation thresholds, fine-tuned by expression of natural killer (NK) receptors. Additionally, non-conventional lymphocytes generally localize to specific sites, such as mucosa and skin, enabling rapid encounter of foreign antigens. B1 B cells, marginal zone (MZ) B cells, cluster of differentiation (CD) 8αα αβT cells, γδT cells, and natural killer T (NKT) cells are all examples of non-conventional lymphocytes.

This thesis delves into the fascinating world of NKT cells, one of the types of non-conventional T lymphocytes. NKT cells have been shown to make important contributions in such diverse immunological circumstances as protection from various types of pathogens, tumor rejection, and tolerance maintenance. The study of NKT cells was initiated two decades ago and has attracted an increasing level of attention in

recent years, resulting in a rapid accumulation of phenotypical and functional data. However, numerous unexplored areas and unanswered questions remain in the field. This thesis aims at shedding light on three of these questions: What genetic profile distinguishes NKT cells? What genes are characteristic for distinct functional NKT cell subsets? What is the functional role of NKT cells during *Salmonella* infection?

NKT cells share both phenotypic and functional features with other non-conventional lymphocyte populations. The traits characteristic of non-conventional lymphocytes, such as prompt activation and performance of effector function and localization to specific sites that enables rapid encounter of antigen, confer important advantages to the immune system during encounters with endogenous and exogenous threats (Bendelac et al., 2001). In order to illuminate both similarities and disparities between NKT cells and additional non-conventional B and T lymphocytes, a more detailed description of MZ B cells, B1 B cells, CD8αα αβT cells, γδT cells and subsequently NKT cells will follow.

Marginal zone B cells

MZ B cells, defined as $CD21^{hi}$ $CD23^{lo}$ $CD1d^{hi}$ cells, constitute a sub-population of non-circulating B2 cells localized to the marginal zone of the spleen. The marginal zone is sandwiched between the red pulp and the marginal sinus, which surrounds the white pulp. Arterial blood is emptied into the sinuses, resulting in slow blood flow, making MZ B cells ideally placed for screening blood-borne antigens. Upon antigen encounter, the low activation threshold of MZ B cells result in rapid activation, manifested as migration to the T-B border of the spleen, followed by rapid proliferation and differentiation into large antibody-secreting plasma cells. MZ B cells produce IgM and IgG_3 isoforms, which are important for amplifying later immune responses by binding and concentrating immune complexes comprised of complement-bound antigen. MZ B cells use CD21 to bind and transport immune complexes to follicular dendritic cells (DCs), resulting in optimized germinal center formation. MZ B cells also express high levels of B7 molecules and have been shown to prime naïve $CD4^+$ T cells (Attanavanich and Kearney, 2004). Studies have identified separate functions of the high levels of CD1d on MZ B cells, including induction of regulatory T cells and promotion of B cell class switch (reviewed in (Martin and Kearney, 2002) (Lopes-Carvalho and Kearney, 2004) (Lopes-Carvalho et al., 2005)).

B1 B cells

B1 B cells, found in peritoneal and pleural cavities, are the major producers of natural antibodies in mice and humans. Natural antibodies are present in serum and are defined as low-affinity antibodies present in the absence of stimulation with exogenous antigen. They are predominantly immunoglobulin (Ig) M and are selected upon recognition of self antigens, but will upon challenge with pathogen bind pathogen-associated epitopes, constituting a vital first line of protection from pathogens un-encountered previously by the host. Natural antibodies have also been proposed to be involved in housekeeping, that is, the clearance of damaged or apoptotic cells, which is important for prevention of autoimmune development. B1 B cells also produce high amounts of interleukin (IL)-10 important for supporting regulatory T cell populations. In contrast to conventional B2 B cells, B1 B cells commonly express CD5. CD5 is a surface receptor that potently suppresses B cell receptor (BCR) and T cell receptor (TCR) signaling, and is most commonly expressed by T cells. CD5 is suggested to be the reason why B1 B cells fail to be activated upon cross-linking of surface IgM. Additionally, CD5 is thought to protect the B1 B cells from deletion during negative selection. In addition to spontaneous antibody secretion, B1 B cells are also capable of extremely rapid response to hapten challenge; migrating within 24 hours to lymph nodes, and upon exposure to NKT cell-generated IL-4, producing hapten-specific IgM. B1 B cells also recognize and are rapidly activated by T cell-independent antigens, such as lipopolysaccharide (LPS), which induce migration from the peritoneal cavity to spleen, followed by proliferation and a rapid Ig response. When B1 B cells specifically respond to antigen, they mainly produce low-affinity antibodies reactive to antigen with repeated epitopes. (Reviewed in (Baumgarth et al., 2005))

CD8αα αβT cells

CD8αα αβT cells display an oligoclonal and potentially auto-reactive TCR repertoire and an activated/memory phenotype. The CD8αα αβT cells constitute a part of the intestinal intraepithelial lymphocyte (IEL) population and are found preferentially in the small intestine, with a less pronounced presence in ileum. In mice, CD8αα has been shown to bind with high affinity to a major histocompatibility complex (MHC)

class I like molecule, thymic leukemia (TL) antigen. TL is constitutively expressed by epithelial cells in the small intestine. CD8αα–TL interaction has been suggested to play an important role in crosstalk between IELs and epithelial cells. Not much is known about the function of the CD8αα αβT cells as an endogenous antigen has not yet been identified. However, studies have shown that this subset can secrete transforming growth factor (TGF)-β upon activation and prevents colitis, suggesting a role in regulating and maintaining immune quiescence in the intestine (reviewed in (Cheroutre, 2005)).

γδT cells

In mouse, γδT cells re-circulate in blood and reside in liver and in the IEL compartments of intestine, skin, and genitourinary tract where they monitor and kill stressed or transformed epithelial cells. Different γδT cell subsets, defined by common TCR rearrangements, exhibit distinct functional and localization patterns. Murine Vγ5/Vδ1 dendritic epidermal T cells (DETC) in skin can recognize transformed and stressed keratinocytes and produce keratinocyte growth factor (KGF) thereby promoting wound healing. Hepatic Vγ1/Vδ6 cells produce IL-4 upon activation while activation of human Vγ9/Vδ2 cells leads to efficient lysis of target cells and production of interferon (IFN)-γ and tumor necrosis factor (TNF)-α. Surprisingly, activated human Vγ9/Vδ2 cells have also been discovered to act as professional antigen presenting cells; processing antigen, up-regulating expression of CD40, CD80, CD86 and MHC class II, thereby inducing naïve CD4 and CD8 αβT to differentiate and proliferate (Brandes et al., 2005). The ligands of many γδT cells remain undetermined, though recognition of structures up-regulated by stressed, activated or malignantly transformed cells, and molecules conserved in metabolic pathways appears to be common. Several ligands of γδTCR are well defined and include several MHC class I like molecules, such as murine T22 and T10, human MICA, MICB, and CD1c. Certain γδT cell subsets have also been observed to express NK receptors such as NKG2D (Born et al., 2006; Girardi, 2006) (Bendelac et al., 2001).

CHARACTERISTICS OF NK CELLS

In addition to sharing several features with non-conventional lymphocytes, NKT cells also share a number of activational and functional characteristics with NK cells. NK cells constitute the third major lymphocyte population and was originally described in 1975 as cells competent to kill tumor cells without prior sensitization, an ability termed natural killing (Herberman et al., 1975; Kiessling et al., 1975). Bone marrow is considered the primary site for NK cell generation. Mature NK cells are found in blood, bone marrow, liver, lung, lymph nodes, spleen, and uterus. Upon activation, NK cells promptly produce cytokines such as IFN-γ and TNF-α and induce cytotoxicity, predominantly by perforin but also by granzyme, FasL, and TRAIL-mediated pathways. NK cells have been shown migrate into lymph nodes (LN) where they provide an early source of IFN-γ important for polarizing naïve $CD4^+$ αβT cells into T helper (h) 1 cells (Martin-Fontecha et al., 2004). NK cells are important for the control of tumor development and infections with virus, certain parasites and intracellular bacteria (reviewed in (Di Santo, 2006)). Human NK cells have been described to comprise phenotypically and functionally distinct subsets; one subset exhibiting potent cytotoxic activity and preferential recruitment into inflamed tissue, while a second subset is prone to cytokine secretion and traffics to LNs (reviewed by (Cooper et al., 2001).

NK cell function is regulated by a cohort of inhibitory and activating receptors ensuring that tolerance to self is maintained while malignantly transformed or infected cells are recognized and eradicated. Inhibitory receptors bind classical and non-classical MHC class I molecules, which tend to be down-modulated by stressed or infected targets cells as to avoid targeting by the immune system. When the balance between inhibitory and activating signals is shifted towards the latter, either due to a decrease in inhibitory or increase in activating signals, NK cells are induced to perform effector function. While human killer immunoglobulin-like receptors (KIR), murine Ly49 receptors and CD94/NKG2 receptors, which generally mediate inhibitory signals, are well studied, the first activating receptors were not identified until 5 years ago, but are

known to include NK1.1, NKG2D, Ly49D and Ly49H. Activating NK receptors are generally specific for self-structures, such as RaeI and H-60, which are upregulated by stress, activation or malignant transformation of target cells. Cytokines such as IL-12 and IFN-α/β can also shift the balance towards activation, promoting NK cell cytolysis of target cells (reviewed in (Backstrom et al., 2004; Snyder et al., 2004)).

In 1987, the first accounts were given of an unusual αβT cell population in thymus, which expressed intermediate levels of TCRαβ, had a three-fold increase in Vβ8 chain usage and lacked expression of CD4 and CD8 co-receptors (double negative, DN) (Budd et al., 1987) (Ceredig et al., 1987) (Fowlkes et al., 1987). Subsequently, another population of DN αβT cells was discovered residing in bone marrow and, surprisingly, expressing NK1.1. NK1.1 had previously never been observed on T cells and was considered to be a pan-NK cell marker (Yankelevich et al., 1989) (Sykes, 1990). Just like the thymic DN αβT cells, the bone marrow NK1.1$^+$ αβT cells were observed to express intermediate levels of TCRαβ with an increased use of Vβ8 and Vβ7 chains (Arase et al., 1992). When both populations were shown to potently produce IL-4 and IFN-γ upon activation (Zlotnik et al., 1992) (Arase et al., 1993), it was concluded that the two cell types belonged to the same unconventional lymphocyte population.

In addition to using a limited set of TCRβ chains, murine NK1.1$^+$ αβT cells from thymus, spleen and bone marrow were observed to have a TCRα repertoire skewed towards expression of the invariant Vα14-Jα18 TCRα chain, while human DN αβT cells isolated from blood, preferentially expressed the invariant Vα24-JαQ TCRα chain (Porcelli et al., 1993) (Lantz and Bendelac, 1994) (Makino et al., 1995). In 1995, the NK1.1$^+$ αβT cell population was for the first time referred to as NK T cells (Makino et al., 1995). Subsequently, T cells expressing the invariant Vα14-Jα18/Vα24-JαQ chain were termed invariant (i) NKT cells. While expression of invariant TCRs is a characteristic feature of NKT cells a substantial portion of the NKT cell population make use of a diverse non-Vα14-Jα18/Vα24-JαQ TCR repertoire and are therefore called diverse (d) NKT cells. The first study of murine dNKT cells showed them to be restricted, not by the MHC, like conventional αβT cells are, but by another antigen presenting molecule called CD1d (Cardell et al., 1995) as were many of the NK1.1$^+$ αβT cells in mouse (Bendelac et al., 1995) and the human DN Vα24-JαQ-expressing αβT cells (Exley et al., 1997).

One of the more problematic aspects of studying NKT cells is the changes in definition that has occurred over the years paired with technical difficulties in identifying the population as a whole. NKT cells were originally defined as NK1.1$^+$ αβT cells or CD161$^+$ αβT cells (CD161 is the human equivalent of NK1.1), while today NKT cells commonly denotes CD1d-restricted αβT cells. The problem with the NK1.1$^+$ TCRβ$^+$ definition is that it also includes cells that are not CD1d-restricted (Mendiratta et al., 1997) (Eberl et al., 1999b) whilst excluding CD1d-restricted iNKT and dNKT cells that do not express NK1.1 (Benlagha et al., 2000) (Matsuda et al., 2000) (figure 1). An additional problem with using this definition is that the NK1.1 marker is only expressed in a few mouse strains.

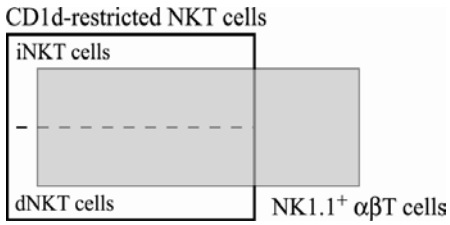

Figure 1. Cells included and excluded by the NK1.1$^+$ TCRβ$^+$ definition (adapted from Cardell, 2005)

One of the realities in the field is that no known combination of markers exists that exclusively identifies the entire NKT cell population. Therefore, NKT cells have to be studied using definitions that include non-CD1d-restricted cells or only subsets of the NKT cell population. In this thesis the following definitions are used (figure 2).

NKT cells	CD1d-restricted T cells
iNKT cells	CD1d-restricted T cells using the invariant Vα14-Jα18/Vα24-JaQ TCR chain
dNKT cells	CD1d-restricted T cells using a diverse non-Vα14-Jα18/Vα24-JaQ TCR chain
NK1.1$^+$ αβT cells	NK1.1$^+$ TCRβ$^+$ cells

Figure 2. Definitions used in this thesis

In addition to the NKT cell hallmark of rapid and abundant production of IL-4 and IFN-γ upon activation, NKT cells also characteristically express NK receptors and exhibit a phenotype reminiscent of activated or memory T cells (reviewed in (Brigl and Brenner, 2004) (Kronenberg, 2005)). Murine NKT cells circulate in blood and are present in liver, spleen, bone marrow, and thymus in numbers close to 10^6 cells per organ and at very low frequencies in LNs. Murine iNKT cells constitute approximately 50% of NK1.1$^+$ αβT cells in spleen and bone marrow, compared to 10% of NK1.1$^+$ αβT cells in liver and thymus (Makino et al., 1995) (Hammond et al., 2001). In human, 1% of CD161$^+$ T cells in blood were iNKT cells (Gumperz et al., 2002) with similar low presence observed in liver (Exley et al., 2002). Thus, while iNKT cells are common in mice, iNKT cells are only present at very low levels in human, suggesting that dNKT cells dominate in human.

Development of T cells

B, NK, and T cells develop from common lymphoid progenitors (CLP) located in the bone marrow. In order for T cells to develop, CLPs exit the bone marrow and migrate into the thymus. In the thymus, T cells randomly recombine variable V, D and J gene segments encoded in the TCR loci and further increase antigen recognition diversity by making non-germ-line-encoded nucleotide additions at the V-(D)-J junctions. After completed rearrangement of the TCR, T cells go through selection events ensuring that only T cells with functional TCRs which recognize appropriate antigens survive to be released into the periphery. Upon entering the thymus, the CLPs pass through a series of developmental stages that can be distinguished by the expression of specific cell surface markers, namely CD3, CD4, CD8, CD25, and CD44. The most immature thymocytes are $CD3^-$ as well as $CD4^-CD8^-$ and are termed DN thymocytes. DN thymocytes can be further subdivided into four successive developmental stages using the CD25 and CD44 markers: $CD25^-CD44^+$ (DN1), $CD25^+CD44^+$ (DN2), $CD25^+CD44^-$ (DN3), and $CD25^-CD44^-$ (DN4) (Godfrey et al., 1993).

At the most immature DN1 stage, thymocytes are pluripotent and can still develop into T, B, NK, or dendritic cells (Shen et al., 2003). Commitment to the T cell lineage occurs when DN1 thymocytes receive a signal through Notch, instigated through the binding of Notch ligands on thymic stromal cells (Pui et al., 1999; Radtke et al., 1999). A proliferative stage ensues (Kawamoto et al., 2003), followed by activation of the recombination activating genes (RAG-1 and RAG-2) at the DN2 and DN3 stages. RAG-1 and RAG-2 are involved in the simultaneous random recombination of the TCRβ, γ and δ chain genes (Capone et al., 1998; Godfrey et al., 1994). Little is known about the signals that direct T cells to a γδT or αβT cell commitment. For a T cell to choose the γδT cell lineage it must successfully rearrange both the γ and δ TCR chains and receive an appropriate signal through the TCRγδ complex upon surface expression. Likewise, it is thought that successful recombination of TCRβ and subsequent surface expression and signaling through the functional pre-TCR (TCRβ

paired with a pre-TCRα chain) (Fehling et al., 1995) is sufficient to terminate further β, γ and δ gene rearrangement and commit the cell to the αβT cell lineage. Upon entering the DN4 stage, thymocytes with a successfully rearranged TCRβ chain will proliferate extensively giving rise to a multitude of thymocyte clones with identical TCRβ chains (Hoffman et al., 1996). At the end of this division cycle the progeny cells begin to express CD4 and CD8 (double positive, DP), re-express the RAG genes and rearrange the TCRα chain (Wilson et al., 1994). A successfully recombined TCRα chain will pair with TCRβ forming a complete αβTCR. At this point it is still undecided whether the DP thymocyte will become a conventional αβT or NKT cell (Gapin et al., 2001). The DP thymocytes now pass through the final maturation steps of positive and negative selection. During selection only DP thymocytes that bind self antigen in context of MHC of CD1d with appropriate strength will survive. During the DP stage, αβT cells also make the CD4/CD8 lineage commitment, thereby entering the last thymic single positive (SP, $CD4^+$ or $CD8^+$) maturation stage. Subsequently, the $CD8^+$ αβT cells and the $CD4^+$ αβT cells, which recognize antigen in the context of MHC class I and II, respectively, leave the thymus and begin to circulate in the periphery (reviewed in (Milicevic and Milicevic, 2004).

Development of NKT cells

NKT cells are a subpopulation of αβT cells and as such share many developmental steps with conventional MHC-restricted αβT cells, but there are also many differences. NKT cell development occurs in thymus (Bendelac et al., 1994; Hammond et al., 1998) (Levitsky et al., 1991) but while the first conventional MHC-restricted αβT cells enter the thymus just prior to birth, NKT cells do not appear until a week after birth, reaching full numbers not until seven weeks of age (Pellicci et al., 2002). It is not known at what stage NKT cells branch off from conventional αβT cells but it has been shown that iNKT cells also pass through a DP thymocyte stage (Gapin et al., 2001) (Egawa et al., 2005). NKT cells express TCRαβ and are absolutely dependent on expression of the pre-TCRα chain (Eberl et al., 1999a) for development. Commitment to the NKT cell lineage is believed to occur when self-antigens are recognized in the

context of CD1d (Kawano et al., 1997) (Smiley et al., 1997). Successful rearrangement of the TCRα and TCRβ chains is followed by positive selection mediated by interaction with CD1d-expressing cortical DP thymocytes (Bendelac, 1995; Bendelac et al., 1994; Brossay et al., 1998b; Coles and Raulet, 1994; Coles and Raulet, 2000) rather than by MHC-expressing epithelial cells, which are necessary for development of conventional αβT cells. While conventional αβT cells capable of recognizing self-agonists are usually deleted during negative selection, this does not occur to self-reactive NKT cells. Rather, the development of iNKT cells is defective in the absence of the endogenous ligand iGb3, a lysosomal glycosphingolipid (Zhou et al., 2004b). Both DP thymocytes and thymic APCs can mediate negative selection of NKT cells (Schumann et al., 2005). It appears that, in addition to CD1d expression, other specific features unique to DP thymocytes are vital for NKT cell selection (Forestier et al., 2003). One of these features could be the expression of signaling lymphocytic activation molecule (SLAM) family members (discussed on page 22).

After successful rearrangement of Vα14Jα18 and Vβ chains, iNKT cell progenitors pass from the DP stage into a developmental stage defined by the level of heat stable antigen (HSA) expression (figure 3). HSA^{high} $CD4^{+}$ and HSA^{high} DP cells constitute the earliest reported stage where iNKT cell commitment has occurred (Benlagha et al., 2005). The HSA^{high} cells then develop into more mature HSA^{low} $NK1.1^{-}CD44^{low}$ (stage 1) cells, which are either $CD4^{+}$ or DN. These cells begin to divide and give rise to $NK1.1^{-}CD44^{high}$ (stage 2) cells. In mice, a third of iNKT cells enter stage 3 ($NK1.1^{+}CD44^{high}$) in the thymus while the rest migrate into the periphery to complete this final maturation step (Pellicci et al., 2002). Expression of NK-markers such as NK1.1, Ly49, CD94/NKG2A over the course of several weeks is the hallmark of stage 3. Already at stage 1, iNKT cells have acquired the ability to produce high levels of IL-4 but this ability is diminished as the cells mature, to finally be eclipsed by IFN-γ production at stage 3 (Benlagha et al., 2002; Matsuda and Gapin, 2005; Pellicci et al., 2002). During stage 3, iNKT cells also upregulate CD122, which forms part of the receptor for both IL-2 and IL-15, consistent with the mature NKT cells' dependency on IL-15, but not on TCR signaling, for survival in the periphery and homeostatic

proliferation (Ranson et al., 2003). This is supported by the fact that NK1.1^{+} TCRβ^{+} cells are decreased in IL-15$^{-/-}$, IL-15Rα$^{-/-}$, CD122$^{-/-}$ mice (Matsuda et al., 2002) (Ranson et al., 2003) (Lodolce et al., 1998; Ohteki et al., 1997). iNKT cell-intrinsic expression of the transcription factor T-bet, which is critical also for Th1 differentiation, is required for iNKT cells to successfully pass from stage 2 to stage 3 of development. CD122, which is under the control of T-bet is transiently upregulated between stage 2 and 3. In T-bet$^{-/-}$ mice, the developmental block at stage 2 could be due to the inability of iNKT cells to respond to IL-15 (Matsuda et al., 2002) (Townsend et al., 2004). During the final maturation of iNKT cells, T-bet appears to function as master regulator inducing the expression FasL, CCR5, CXCR3, CD122, and together with TCR/IL-2 signaling also granzyme B, perforin, IFN-γ, RANTES/ CCL5 and NK1.1 (Matsuda et al., 2006).

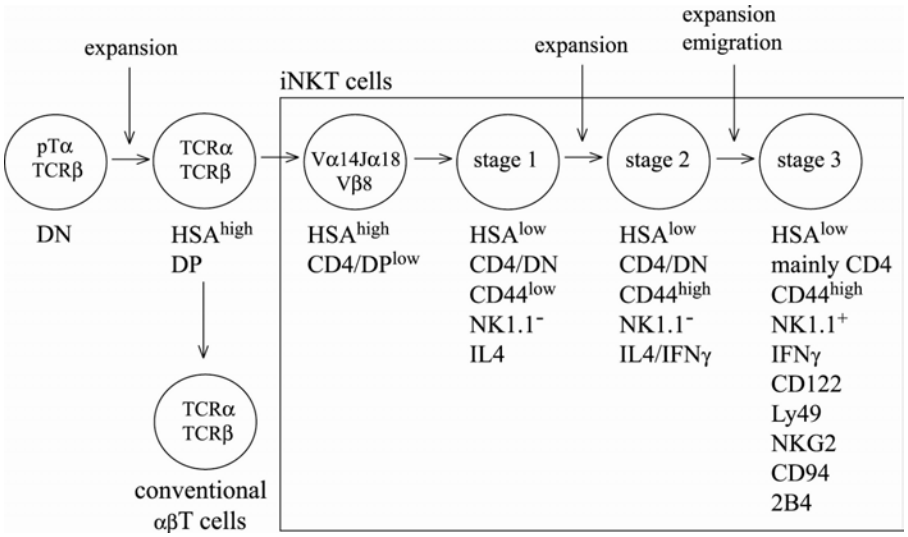

Figure 3. Phenotyic changes during thymic development of iNKT cells (adapted from Matsuda and Gapin, 2005)

Several intracellular signaling pathways have been shown to be required for iNKT cell development, such as the NF-κB pathway. In order for development to proceed normally certain Rel/NF-κB family members must be intrinsically expressed by the

iNKT cells, such as inhibitor of κB kinase 2 (IKK2), and NF-κB p50, while the expression of others, RelB and NF-κB p52, are required in thymic stroma cells (reviewed in (Matsuda and Gapin, 2005)).

The lymphotoxin (LT) signaling pathway is also critical for development of NK1.1$^+$ TCRβ$^+$, iNKT, and NK cells but not conventional MHC-restricted αβT cells. LTα1β2 expressed on iNKT cells is required to bind LTβ receptors (LTβR) expressed on thymic stroma cells. This triggering of LTβR leads to the activation of the transcription factor RelB, possibly through activation of NF-κB inducing kinase (NIK) in the stroma cell. It's not known exactly how this signaling pathway promotes NKT cells differentiation but it appears to be important during the later stages of development (Franki et al., 2005).

Another signaling pathway crucial for NKT cell development was unraveled when NKT cells were found to be absent in mice lacking either the Src kinase FynT or SLAM-associated protein (SAP). A number of studies have helped divulge the link between FynT and SAP. SLAM is expressed on the surface of both DP thymocytes and NKT cells but not thymic epithelial cells. SLAM is known to engage in homotypic interactions, upon which SLAM surface receptors associate with intracellular SAP, which in turn interacts with FynT, which can act as a link in two separate signaling pathways. FynT can induce inhibition of the Ras-MAPK pathway, which is activated by antigen, cytokine, or growth factor stimuli. This reduction of activation signal strength could be involved in avoiding deletion of NKT cells during negative selection. FynT can also act as a link to the PKCθ-Bcl10-NF-kB pathway which is engaged in TCR signaling and possibly in SLAM signaling as well. Thus, SAP/FynT signaling, possibly induced by SLAM-SLAM interactions between NKT cells and DP thymocytes, is involved in normal NKT cell development (reviewed in (Sandberg and Ljunggren, 2005) and (Borowski and Bendelac, 2005)).

Proteins required for appropriate antigen processing and presentation on CD1d have also been shown to be important for iNKT cell development. Among these proteins

are: the lysosomal protease cathepsin L (Honey et al., 2002), a precursor of endosomal lipid transfer proteins called prosaposin (Zhou et al., 2004a), and Niemann-Pick Type C1 protein (NPC1) involved in lipid trafficking between endosome and lysosome (Sagiv et al., 2006).

Additional gene deficiencies that have relatively little effect on conventional αβT cells but are required for iNKT and NK1.1^{+} αβT cell development are: AP-1 (Williams et al., 2003) and the transcription factors Ets1 (Walunas et al., 2000), Runx1, and RORγt (Egawa et al., 2005).

Antigen recognition by B cells and T cells

B and T cells of the adaptive immune system must efficiently recognize pathogens and malignantly transformed cells in order to perform their functions. The BCR and TCR are crucial for this recognition. B cells can bind unprocessed antigen using BCR. In contrast, TCR on αβT cells can only recognize fragments of processed antigen in the context of antigen presenting molecules expressed by surrounding cells. The antigen presenting molecules of conventional αβT cells are called MHC class I and II molecules, and are absolutely required for the development and function of conventional $CD8^+$ and $CD4^+$ αβT cells, respectively (reviewed in (Rudolph et al., 2006)). The essential role of MHC in the immune system becomes apparent through the evolutionary conservation of the MHC class I and II genes, which are found in all jawed vertebrates; including mammals, birds, reptiles, cartilaginous fish and bony fish (Flajnik and Kasahara, 2001).

The CD1 family

In contrast to conventional αβT cells, NKT cells recognize antigens presented by CD1d molecules. The number of CD1 genes or isoforms varies between species, with humans having 5 isoforms (CD1a-e) while mice and rats only carry CD1d. However, regardless of how many isoforms a species has, evolutionary pressure has made sure that all compartments of the intracellular trafficking route are sampled (figure 4). The trafficking route of an antigen presenting molecule determines the type and origin of the presented antigen, as different compartments of the intracellular trafficking route contain antigens from different sources. MHC class I and II molecules sample compartments containing cytosolic and endosomal antigens, respectively. In human, CD1a-d, and in mouse, CD1d, monitor what antigens are present in the endosomal or lysosomal compartments (reviewed in (Brigl and Brenner, 2004)).

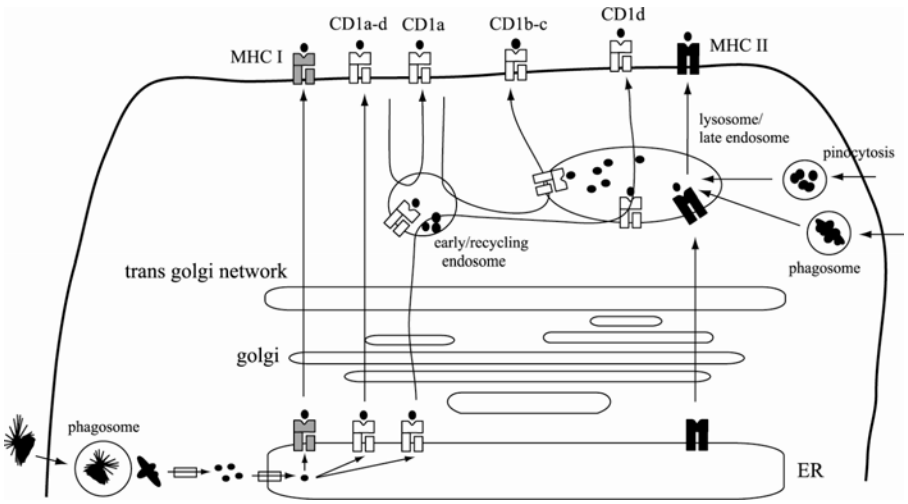

Figure 4. A schematic view of the intracellular trafficking of CD1a-d (adapted from Brigl and Brenner, 2004)

Structure and expression pattern of CD1d

CD1d shares features with both MHC class I and II molecules. The intron/exon structure and protein organization of CD1d is similar to MHC class I, in that the CD1d heavy chain associates with β2-microglobulin to form a heterodimer. In contrast CD1d can load antigen in the endosomal pathway, which is similar to MHC class II molecules. The antigen-binding groove of CD1d is deep and the two pockets are lined with hydrophobic residues, making it ideal for binding alkyl chains of lipids, glycolipids and lipopeptides while the more polar parts of the ligand is left accessible for binding by the TCR (reviewed in (Calabi and Milstein, 2000) (Brigl and Brenner, 2004)).

CD1d is expressed throughout the body, being observed on all haematopoietic cells; at lower levels on peripheral lymphocytes and at higher levels on macrophages, monocytes, MZ B cells, thymocytes, and subsets of DCs. CD1d has also been observed on hepatocytes, keratinocytes, some fibroblasts and inconsistently on gut epithelium (Exley et al., 2000; Park et al., 1998; Spada et al., 2000; Swann et al., 2004).

Evolutionary conservation of CD1 and NKT cell reactivity

CD1 genes are evolutionary conserved and are present in all mammals investigated to date, which includes cow, guinea pig, human, mouse, pig, rabbit, rat, rhesus macaque, sheep, and wild boar (Brigl and Brenner, 2004). Recently, a CD1 isoform was described also in red jungle fowl and domestic chicken, which indicates that the origin of CD1 pre-dates the divergence between birds and mammals, showing that CD1 was part of the early foundations of the adaptive immune system (Maruoka et al., 2005; Miller et al., 2005; Salomonsen et al., 2005). Murine iNKT cells recognize a glycosphingolipid, α-galactosylceramide (αGalCer), presented on human CD1d and vice versa, indicating that the reactivity of iNKT cells for αGalCer is unusually conserved. There are very few examples of this type of interspecies cross-reactivity for T cells, indicating that conservation of iNKT cell reactivity is particularly important for maintaining host survival (Brossay et al., 1998a)

As CD1d sequesters only the hydrophobic part of its ligand, this puts few or no limits on the composition of the ligand's polar region, allowing CD1d to present ligands of very varied appearance. And indeed, as the field has developed, CD1d ligands have been shown to be of both endogenous and exogenous origin, including lipids, glycolipids, and lipopeptides. Though the origin of the various NKT cell ligands is diverse, structural similarities between the identified ligands become apparent upon comparison (figure 5).

Name	Structure	Origin	Reactive NKT cell subset
αGalCer		marine sponge	100% of human iNKT 100% of murine iNKT
Sulfatide		myelin	murine dNKT pop.
iGb3		lysosome	50% of human iNKT 50% of murine iNKT
LPG	15-30(pMan-Gal)Gal2Gal1Man2Gln	*Leishmania*	subset of murine iNKT
GSL-1		*Sphingomonas*	subset of human iNKT subset of murine iNKT
PBS 30		*Sphingomonas*	majority of human iNKT 25% of murine iNKT

Figure 5. Antigens presented by CD1d and recognized by NKT cells

The first identified NKT cell ligand

In November of 1997, the first NKT cell ligand was identified and shown to activate all iNKT cells. A CD1d bound ceramide, called α-galactosylceramide (αGalCer) induced iNKT cells to proliferate, produce IL-4 and IFN-γ, and lyse target cells both in mouse (Kawano et al., 1997) and in human (Spada et al., 1998). It was thus discovered that iNKT cells recognized glycollipid antigens in contrast to conventional

αβT cells which recognize peptides. αGalCer, originally derived from the marine sponge *Agelasphins mauritanus,* was identified during a screen for substances with anti-metastatic effects (Kobayashi et al., 1995). αGalCer is unusual as it contains a sugar moiety with an α-anomeric conformation, which is important for the substance's iNKT cell-activating properties. As human and murine iNKT cells recognize αGalCer regardless if it is presented by human or murine CD1d, this suggests that conservation of iNKT cell reactivity is important (Brossay et al., 1998a). However, it is improbable that this evolutionary conserved reactivity has developed as a protection against marine sponges. Thus, αGalCer probably mimics another natural NKT cell ligand. Though α-anomeric sugars are rare in normal mammalian and microbial structures (Kawano et al., 1997), αGalCer have certain similarities to structures found in *Sphingomonas* bacteria (Kawasaki et al., 1994) and it has recently been shown that NKT cells do recognize lipid antigens from *Sphingomonas* (see below), leading to the idea that αGalCer mimics a microbial antigen.

NKT cells recognize endogenous ligands

A remarkable feature of NKT cells is their apparent self-reactive nature. In contrast, self-reactive conventional αβT cells are generally deleted in order to prevent autoimmune reactions. Early papers showed that CD1d ligands could be of endogenous origin, as NKT cells were stimulated by $CD1d^+$ APCs in the absence of exogenous antigen (Bendelac et al., 1995) (Cardell et al., 1995). Also endogenous peptides containing hydrophobic binding motifs could be bound by CD1d, and upon presentation to CD1d-restricted $CD8\alpha\beta^+$ T cell lines induced lysis of target cells (Castano et al., 1995), but subsequent accumulation of data indicated that the principle CD1d ligands were lipid or glycolipid to their nature rather than peptidic.

The first endogenous lipid ligands were found when lipid extracts from a tumor cell line, containing the polar lipids phosphatidylinositol (PI) and phosphatidylglycerol (PG), were shown to stimulate both iNKT and dNKT cell hybridomas *in vitro* (Gumperz et al., 2000). Also, a disialoganglioside called GD3, that is highly expressed by certain tumors, but generally not by normal mammalian tissue, specifically activated

a subpopulation of iNKT cells to produce IL-4, IFN-γ, and IL-10 in a CD1d-dependent manner (Wu et al., 2003).

In 2004, two additional endogenous ligands were identified. Firstly, a lysosomal glycosphingolipid isoglobotrihexosylceramide (iGb3) was demonstrated to be recognized by 50% of murine and human iNKT cells. Importantly, iGb3 was the first ligand shown to be required for normal development of iNKT cells in mouse (Zhou et al., 2004b). Secondly, sulfatide, a myelin derived glycolipid, activated a murine dNKT cell population in a CD1d-dependent manner. Treatment with the sulfatide was shown to protect mice from EAE by inhibiting IL-4 and IFN-γ production by pathogenic myelin-reactive T cells (Jahng et al., 2004).

NKT cells recognize exogenous ligands derived from bacteria and parasites

The first natural (of a non-sponge origin) exogenous ligands were identified in 2004. Phospatidylinositol mannoside (PIM_4), a lipid found in membranes of *mycobacteria*, was shown to bind CD1d and stimulate subsets of murine and human iNKT cells to produce IFN-γ but not IL-4 and lyse target cells (Fischer et al., 2004). Additionally, lipophosphoglycans (LPG) present at the surface of the protozoan parasite *Leishmania donovani,* were shown to bind CD1d and induce murine hepatic iNKT cells to produce IFN-γ (Amprey et al., 2004). A year later, glycosphingolipids from cell wall of *Sphingomonas* species were shown to induce a majority of human and 25% of murine iNKT cells to proliferate and produce IFN-γ. *Sphingomonas* is a LPS-negative bacterium, common in soil, seawater and plants (Kinjo et al., 2005) (Mattner et al., 2005) (Sriram et al., 2005) (Wu et al., 2005). These data clearly show that NKT cells can recognize processed antigens from pathogens, indicating a role for NKT cells in immune responses directed against pathogens.

FUNCTIONAL CAPACITY OF NKT CELLS

When a NKT cell is activated it has the capacity to perform different effector functions. What effector function the NKT cell ultimately performs is probably decided by many different factors; what kind of activating signal the cell receives (TCR dependent or independent, or a combination of the two), what kind of cells the NKT cell is interacting with, in what tissues and local milieu the activation event occurs, and to what NKT cell subset the cell belongs to a.s.o. NKT cells can respond to activation by secreting cytokines, proliferating, performing cytolysis, but also depletion of NKT cells has been widely described.

Production of Cytokines and proliferation

A characteristic feature of NKT cells is the production of a diverse array of cytokines, including IL-2, IL-4, IL-5, IL-10, IL-13, INF-γ, GM-CSF, and TNF-α (Kronenberg, 2005). However, NKT cells are especially noted for their very rapid production of large amounts of IL-4 and IFN-γ upon stimulation, with mRNA and protein levels of the two cytokines being substantially increased already by 30 and 90 minutes after activation, respectively (Yoshimoto and Paul, 1994) (Amprey et al., 2004). This rapid production can be explained by the high levels of acetylation of histones surrounding the IFN-γ and IL-4 promoters, which allows transcription factors greater access to these loci. While NKT cells do not store cytokine protein, they constitutively express substantial amounts of mRNA for both IFN-γ and IL-4, and are thereby poised for rapid transcription and secretion of the cytokine protein. This is in sharp contrast to naïve MHC-restricted T cells, which lack constitutive presence of cytokine mRNA (Stetson et al., 2003).

In addition to being poised for cytokine production, compared to conventional T cell clones, NKT cells are present in tissues at much higher frequencies. Therefore, NKT cells do not have the same need as naïve conventional αβT cells to proliferate in order to reach sufficient numbers to have an effect in an ongoing immune response. Thus, NKT cells are not dependent on clonal expansion to perform effector functions.

However, NKT cells do proliferate upon activation. iNKT and NK1.1$^+$ αβT cells have been shown to proliferate robustly *in vivo* and *in vitro* upon TCR or IL-12 stimulation (Kawano et al., 1997) (Eberl and MacDonald, 1998) (Spada et al., 1998) (Leite-De-Moraes et al., 1999) (van der Vliet et al., 2001). After the expansion phase, NKT cell numbers are observed to return to steady state levels within a few days (Wilson et al., 2003).

Apoptosis and receptor down-modulation

It has been a widely observed phenomenon within the NKT cell field that activation may induce a rapid disappearance of both iNKT and NK1.1$^+$ αβT cells followed by a repopulation phase. Repopulation was thought to depend on proliferation of NK1.1$^+$ αβT cells in the bone marrow with subsequent migration of the offspring into the depleted organs (Eberl and MacDonald, 1998) and activation induced cell death (AICD) was believed to be one of the main occurrences responsible for the depletion. Already in 1997, it was shown that *in vitro* activation of CD4$^+$ NK1.1$^+$ splenocytes led to a transient down modulation of surface NK1.1 expression (Chen et al., 1997) suggesting that part of the observed depletion of NKT cells could be due to activation-induced down-modulation of the defining marker NK1.1. In 2000, a NK1.1-independent manner of identifying NKT cells was introduced; using αGalCer-loaded CD1d-multimers, iNKT cells could be directly identified (Matsuda et al., 2000) (Benlagha et al., 2000). A subsequent illuminating study, showed that within hours of αGalCer *in vivo* or *in vitro* treatment, both NK1.1 and TCR were rapidly down-regulated by iNKT cells, though numbers of Vα14-Jα18 mRNA transcripts were retained. Additionally, the splenic iNKT cells were found to be competent to go through multiple rounds of division, repopulating the NKT cell-depleted spleen in a bone marrow-independent manner, in contrast to the previous results of Eberl et al (Wilson et al., 2003). Wilson et al. showed that bone marrow is the only site where some NK1.1 expression is retained upon activation of NKT cells. Thus, bone marrow would be the only site where Eberl et al. would have observed sufficient numbers of NK1.1$^+$ CD3$^+$ cells proliferating after activation. In summary, the apparent loss of NKT cells upon activation with αGalCer is due in part to AICD and in part to down

modulation of defining markers such as TCR and NK1.1 while the contribution of emigration of NKT cells has not been examined. Keep in mind that αGalCer is an artificial ligand and may not be representative of natural activation (see paper III).

Cytotoxicity

Upon activation, human iNKT cells have been shown to exert perforin-, granzyme B-, and TRAIL-mediated cytolysis of tumor cells (Kawano et al., 1999) (Nieda et al., 2001) (Metelitsa et al., 2003). In addition, human iNKT cells express granulysin, which was shown to be important for cytolysis of mycobacteria-infected monocytes (Gansert et al., 2003). In the studies where it was tested, cytolysis of target cells was dependent on CD1d-expression by target cells. Also murine NKT cells have been shown to induce cytolysis of target cells upon activation. Interestingly, activated murine iNKT cells induced perforin-mediated cytolysis of tumor cells, in a manner suggested to be CD1d-independent (Kawano et al., 1998). In addition, FasL-mediated cytolysis was observed to be utilized by murine NK1.1^{+} αβT thymocytes for spontaneous killing of DP thymocytes (Arase et al., 1994) and by murine hepatic NK1.1^{+} αβT cells for killing of hepatocytes and tumor cells (Nakagawa et al., 2001).

WAYS OF ACTIVATING NKT CELLS

Just as NKT cells can perform different effector functions, they can also receive the activation-inducing signals through different kinds of receptors. The primary ways of activating NKT cells is signaling through the TCR or involvement of NK receptors, but additional less studied stimulatory and co-stimulatory receptors also play a role in activating NKT cells.

TCR and co-stimulatory receptors

Just like conventional MHC restricted T cells, NKT cells become activated upon TCR stimulation. NK1.1$^+$ αβT and iNKT cells were shown to rapidly produce IL-4 and IFN-γ upon stimulation through TCR (Arase et al., 1993) (Yoshimoto and Paul, 1994) (Kawano et al., 1997). NKT cells are also dependent on co-stimulation for optimal function. iNKT cells constitutively express CD28 and will upon αGalCer treatment up-regulate CD40L. Block of CD28 or CD40L signaling inhibits IFN-γ production by iNKT cells and αGalCer-mediated cytotoxicity. In contrast, iNKT cell IL-4 production is dependent only on CD28 but not on CD40L signaling (Hayakawa et al., 2001). Another co-stimulatory receptor, glucocorticoid-induced TNF receptor (GITR) is constitutively expressed by NK1.1$^+$ αβT cells, as well as being up-regulated upon αGalCer treatment. GITR-signaling enhances αGalCer-induced proliferation and production of IL-4, IFN-γ, IL-10, and IL-13 (Kim et al., 2006b). Additionally, another co-stimulatory molecule called ICOS is constitutively expressed by iNKT cells. It has been shown that in the absence of ICOS, iNKT cells produce less IL-4 and IFN-γ upon TCR stimulation and exhibits lower levels of cytotoxicity (Kaneda et al., 2005).

NK-receptors

NKT cells also express NK receptors, capable of inducing stimulation or inhibition of NKT cells. Activating NK receptors can act both as stimulatory and co-stimulatory molecules, which is observed for the NKR-P1 family. The NKR-P1 family has only one member in human, NKR-P1A, while mouse can boast of three, NKR-P1A-C. Cross-linking of the activating receptor NK1.1/NKR-P1C on murine splenic NK1.1$^+$

$CD3^+$ cells was found to induce production of substantial amounts of IFN-γ but no IL-4 (Arase et al., 1996). Additionally, NK1.1 association with FcRγ was crucial for $NK1.1^+$ $CD3^+$ thymocytes to produce IFN-γ upon NK1.1 cross-linking (Arase et al., 1997). Another family member, CD161/NKR-P1A was observed to act in a co-stimulatory manner by enhancing production of IL-4 and IFN-γ and proliferation of human iNKT cells, induced by CD3-cross-linking or CD1d-expressing B cells. In the same system, another NK-receptor CD94/Klrd1 was shown to have similar enhancing effects upon CD3-cross-linking but no apparent role during stimulation with CD1d-expressing B cells (Exley et al., 1998)

The Ly49 receptor family, constituted of the 23 Ly49A-W members, consists of both inhibitory and activating receptors, which recognize specific allelic versions of MHC class I molecules or viral MHC class I like ligands (Dimasi and Biassoni, 2005). dNKT cells, from the 24αβ transgenic mouse, exhibited reduced proliferation upon activation when expressing inhibitory Ly49A receptors (Skold and Cardell, 2000). This data was confirmed when a subsequent study showed that upon activation with αGalCer, $NK1.1^+$ αβT cells expressing inhibitory Ly49A/C/I/G2 receptors also proliferated less, suggesting that once the inhibitory Ly49 receptors recognize MHC class I on the αGalCer-presenting APCs, the TCR-mediated activation of the NKT cell is inhibited (Maeda et al., 2001).

Toll like receptors

Toll like receptors (TLR)s are receptors which recognize conserved pathogen structures and are commonly found among innate immune cells. iNKT cells have been shown to express TLR4 and injection of the TLR4 ligand, LPS, induces hepatic iNKT cells to produce IL-4 but not IFN-γ, independent of IL-12 (Askenase et al., 2005). Similarly, *in vitro* stimulation with lipoprotein, which is a ligand of TLR2, induces hepatic $NK1.1^+$ αβT cells, which express TLR2 mRNA, to express FasL. FasL has been shown to be involved in the NKT cell-mediated liver damage associated with *Escherichia coli* (Shimizu et al., 2002) and *Salmonella* infections (Hiromatsu et al., 2003).

Cytokine stimulation

Also cytokines can induce activation of NKT cells. IL-12 treatment increased NK1.1 expression on hepatic NK1.1^{+} TCR^{int} cells, enhanced cytotoxicity against tumor cell lines, and prevented metastases. Protection from metastases depended on NK1.1 and CD3 but not CD8 expressing cells (Hashimoto et al., 1995) (Takeda et al., 1996). Additionally, *in vitro* IL-12+IL-18-stimulation, in the absence of TCR cross-linking, induced DN NK1.1^{+} αβT thymocytes to produce IFN-γ (Leite-De-Moraes et al., 1999). Further, NK1.1^{+} CD3^{+} cells activated *in vitro* with IL-12+IL-18, were induced to produce IL-2 and IFN-γ, which was crucial in collaboration with NK cells, for restricting tumor growth *in vivo* (Baxevanis et al., 2003).

Reciprocal activation of and by dendritic cells

Numerous studies have shown that NKT cells and DCs will reciprocally activate one another upon a single αGalCer administration. αGalCer presented by DCs activated NK1.1$^+$ αβT cells to produce IFN-γ and the NK1.1$^+$ αβT cells then in a CD40L-dependent manner reciprocally activated the DCs to produce IL-12 (Kitamura et al., 1999). iNKT cells were also shown to produce IL-4 and IFN-γ upon interaction with αGalCer-presenting DCs, while simultaneously inducing activation and maturation of the DCs as shown by up-regulation of surface expression of MHC II, CD40, CD80, and CD86 and increased production of IL-12 (Fujii et al., 2002; Fujii et al., 2003).

iNKT cells also have the ability to induce regulatory properties in DCs. Repeated injections of αGalCer caused iNKT cells to produce IL-10, which in turn induced IL-10 production in CD8α$^-$ DC and reduced IL-12 production in the CD8α$^+$ DCs. These changes led to suppression of pathogenic CD4$^+$ T cells in an EAE model (Kojo et al., 2005). iNKT cells have also been shown to induce recruitment of DCs in an autoimmune diabetes model. NOD mice injected repeatedly with αGalCer were protected from development of diabetes due to iNKT-dependent recruitment of tolerogenic CD8α$^-$ DCs into pancreatic LN. In the pancreatic LN, the pathogenic T cells either went into apoptosis or became tolerized (Naumov et al., 2001) (Chen et al., 2005).

B cells as antigen presenting cells

B cells can modulate the cytokine production of NKT cells in a manner distinct from other APCs. αGalCer presented on a non-DC population blocked αGalCer-DC induced IFN-γ production by NKT cells (Fujii et al., 2002). Three years later, the non-DC population was identified as B cells, hypothesized to be expressing an iNKT cell inhibitory cell surface molecule. This study also showed that different APCs influenced the composition of the cytokine repertoire of the responding NKT cell. Thus,

αGalCer presented by DCs induced production of both IL-4 and IFN-γ, αGalCer presented by B cells induced production of only IL-4, while neither cytokine was induced when hepatocytes or macrophages acted as APCs (Bezbradica et al., 2005).

Two *in vitro* studies showed that human iNKT cell clones could provide help for B cells; inducing B cell proliferation and antibody production even in the absence of exogenous antigen suggesting that NKT cells recognize an endogenous antigen presented on CD1d on B cells (Galli et al., 2003a; Galli et al., 2003b). Additionally, it has been suggested that B cells more efficiently present ligands on CD1d subsequent to BCR interaction with the ligand. This hypothesis was based on data showing that BCR-interaction with modified αGalCer, enhanced uptake of modified αGalCer to CD1d-containing organelles, leading to a CD1d-dependent 100-fold increase in activation of iNKT cells (Lang et al., 2005).

Providing help for B cells

While B cells are generally not dependent on NKT cells for proper function, a number of studies have shown that antibody production in certain models is dependent on CD1d, suggesting that NKT cells can give B cell-help; inducing B cell expansion and antibody production. CD1d dependency was shown when CD1d$^{-/-}$ mice immunized with polysaccharides from *Steptococcus pneumoniae* failed to develop an IgG response (Kobrynski et al., 2005). Likewise, CD1d$^{-/-}$ mice infected with *Borrelia hermsii* bacteria had a diminished production of protective *Borrelia* specific IgM antibodies by MZB cells (Belperron et al., 2005). IL-4 produced by αGalCer-stimulated NKT cells has been demonstrated to be instrumental in B cell activation and antibody production (Kitamura et al., 2000). CD1d-dependent recognition of the GPI moiety of a *Plasmodium berghei*-derived protein was required for production of IgG antibodies specific for the protein part. The IgG production depended on IL-4 produced by NK1.1^{+}CD4^{+} αβT cells (Schofield et al., 1999). Finally, a contact sensitivity model showed that production of IgM by B1 B cells was dependent on IL-4 produced by hepatic NKT cells (Campos et al., 2003).

NKT cells rapidly activate NK cells

Activated iNKT cells can rapidly activate NK cells to produce IFN-γ, proliferate, and perform cytolytic actions. Two studies showed that αGalCer-activated iNKT cells induced NK cells to upregulate CD69, produce IFN-γ, and exhibit cytolytic functions, in a CD1d- and IFN-γ-dependent manner while NK cell proliferation was dependent on CD1d and either IFN-γ or IL-12 (Carnaud et al., 1999; Eberl and MacDonald, 2000). Recently, iNKT cell-dependent activation of macrophages, which induced secretion of IL-12, was shown to be important for optimal IFN-γ production by NK cells. Macrophages do not need to express CD1d in order to participate in NK activation, indicating that NKT cells activated macrophages in an antigen-independent manner (Wesley et al., 2005). Similarly, in a human *in vitro* system, αGalCer-activated iNKT cells induced potent NK cell cytotoxicity against tumor cells, in an IL-2 and IFN-γ dependent manner (Metelitsa et al., 2001).

Modulating macrophage function

iNKT cells can activate and induce macrophages to produce IL-12, without requirement of CD1d expression on the macrophage (Wesley et al., 2005). iNKT cells can also induce survival signals in macrophages as iNKT were shown to be necessary for sufficient expression of the anti-apoptotic HSP65 in macrophages during *Leishmania* infection (Ishikawa et al., 2000). IL-13 produced by NKT cells in a mammary tumor model suppressed macrophage polarization into iNOS-expressing M1 macrophages necessary for efficient tumor control (Sinha et al., 2005).

Recruitment of neutrophils

NKT cells can recruit neutrophils into infected tissue. NKT cells mediate recruitment of neutrophils into the lung by promoting MIP-2/CXCL2 production during the early stages of *P. aeruginosa* and *S. pneumoniae* infections (Nieuwenhuis et al., 2002) (Kawakami et al., 2003).

Indirect modulation of effector T cell function

Activation of iNKT cells induces $CD4^+$ T cells and $CD8^+$ T cells to differentiate into effector cells as was shown in studies where αGalCer and antigenic protein was co-administered, which induced DCs to prime antigen-specific $CD8^+$ T cells into CTLs in a $CD4^+$ T cell-independent manner, to polarize $CD4^+$ T cells into Th1 cells, and to increase cross-presentation of protein to $CD8^+$ T cells (Stober et al., 2003) (Fujii et al., 2003) (Hermans et al., 2003). Activation of hepatic iNKT cells is required for recruitment into tissue of the effector T cells responsible for the classical late phase of contact sensitivity and delayed-type hypersensitivity (reviewed in (Askenase et al., 2004)). In an autoimmune diabetes model, iNKT cells were instrumental in anergizing autoreactive $CD4^+$ T cells, which resulted in protection from diabetes development. In this model the autoreactive $CD4^+$ T cells were primed in the pancreatic LN but failed to differentiate into IFN-γ producing effector cells (Beaudoin et al., 2002). Later it was shown that cell-to-cell contact between the iNKT cells and autoreactive $CD4^+$ T cells and/or APCs was necessary for immuno-suppression to occur (Novak et al., 2005).

Reciprocal activation of and by regulatory T cells

The substantial amount of IL-2 produced by αGalCer or CD3+CD28 activated human $CD4^+$ iNKT cells, induces proliferation of allogenic DC-stimulated $CD25^+$ $CD4^+$ regulatory T cells (Jiang et al., 2005). In a murine model of experimental autoimmune myasthenia gravis, αGalCer administration inhibited disease-development and induced $CD25^+$ $CD4^+$ regulatory T cells to proliferate, up-regulate Foxp3 and bcl-2, and enhanced inhibition of autoreactive T cell-proliferation, suggesting a modulation of $CD25^+$ $CD4^+$ regulatory T cell-function by iNKT cells (Liu et al., 2005).

$CD25^+$ $CD4^+$ regulatory T cells were also shown to modulate the activity of NKT cells. In a human system, $CD25^+$ $CD4^+$ regulatory T cells suppressed iNKT cell proliferation and cytokine production, in a manner dependent on cell-to-cell-contact, involving ICAM-1 interactions (Azuma et al., 2003). NKT cell cytolysis of tumor cells was also abrogated by $CD25^+$ $CD4^+$ regulatory T cells, both *in vitro* and *in vivo* (Azuma et al., 2003; Nishikawa et al., 2003).

How NKT cells can selectively modulate either a Th1 or Th2 response when they simultaneously produce both Th1 and Th2 cytokines is not understood. As has been described above, NKT cells have the capacity to perform a wide range of different effector functions upon activation. What effector function an activated NKT cell chooses to perform, is believed, at least partly, to be dependent on the kind of stimulatory and inhibitory signals the NKT cells have received. An additional explanation is the existence of multiple functional subsets of NKT cells, each equipped with a specific functional program, which influences how the subset will react to external stimuli. Over the last few years, functional data has accumulated in support of the existence of these NKT cell subsets.

Defining NKT cell subsets

The NKT cell population can be divided into subsets based on the composition of the TCR or expression of co-stimulatory markers. Two NKT cell subsets have been described in mice and human; the iNKT cell subset which is phenotypically and functionally distinct from the remaining NKT cells, which collectively have been termed dNKT cells. Thus, this division depends on whether the nature of the TCR repertoire is invariant (i) or diverse (d). iNKT cells utilize a TCRα chain of a Vα14-Jα18 composition in mouse and a Vα24-JαQ composition in human, paired with a limited set of TCRβ chains; in mouse generally Vβ8, Vβ7 or Vβ2 chains, while in human the Vβ11 chain is preferentially used. At this point, dNKT cells encompass all NKT cells that do not use a Vα14-Jα18/Vα24-JαQ TCRα rearrangement. As the NKT cell field is further explored, it is probable that additional subsets using restricted TCR repertoires, though of a non-Vα14-Jα18 type, will be identified among the dNKT cells. This hypothesis is supported by the observation that among dNKT cells, certain TCRα and TCRβ chains appear to be recurrently used (Behar et al., 1999; Chiu et al., 1999) (Park et al., 2001). It has also been shown that human and murine iNKT cells can be divided into subsets based on expression of CD4 and CD8. Though the

functional difference between these iNKT cell subsets is apparent in human (Takahashi et al., 2002) it is less well documented in mouse.

dNKT and iNKT cells

dNKT and iNKT cells share NKT cell-characteristics; such as dependency on CD1d (Cardell et al., 1995) (Behar et al., 1999; Chiu et al., 1999), recognition of endogenous ligands (Bendelac, 1995) (Cardell et al., 1995) (Behar et al., 1999), an activated memory phenotype (Skold et al., 2000) (Park et al., 2001), and prompt secretion of cytokines (Stenstrom et al., 2004) (Behar et al., 1999). However, there are clear differences between the two subsets; iNKT cells express CD69, are $CD4^+$ or DN, and produce both IFN-γ and IL-4, while dNKT cells express CD49b, are predominately DN and produce high levels of IFN-γ but only low levels of IL-4 (Stenstrom et al., 2004).

Identification of dNKT and iNKT cells

iNKT cells can be directly identified using an αGalCer-loaded CD1d-multimers, which directly binds all NKT cells expressing the invariant TCR. Additionally, the effect of iNKT cells in various functional systems can be studied using a Vα14 transgenic mouse (Bendelac et al., 1996), which over-expresses iNKT cells or a $J\alpha18^{-/-}$ mouse, which lack all iNKT cells (Cui et al., 1997). In contrast, there exist some difficulties in identifying dNKT cells, as dNKT cells do not recognize αGalCer (Makowska et al., 2000) (Gumperz et al., 2000) and the probable presence of several dNKT cell populations also suggests that it is unlikely that a common dNKT cell ligand that is specifically recognized by all dNKT cells exists. Without such as ligand, direct identification of the total dNKT cell population using a CD1d-multimer is not possible, ensuring that the distinct dNKT cell populations will have to be examined separately. One ligand, a myelin derived sulfatide, has been shown to specifically activate a dNKT cell population in human and mouse. In mouse, 4% of liver lymphocytes and 0.2% of splenocytes and thymocytes were sulfatide-specific dNKT cells (Jahng et al., 2004). This is the first dNKT cell unique ligand to be identified and using a sulfatide-loaded CD1d-multimer these cells can be directly stained. The majority of the functional data pertaining to dNKT cells has been obtained in an

indirect manner by comparing results from CD1$^{-/-}$ mice (Mendiratta et al., 1997) and Jα18$^{-/-}$ mice. In addition, the transgenic 24αβ mouse with increased presence of dNKT cells using a Vα3.2/Vβ9 CD1d-restricted TCR (Skold et al., 2000) and the CD1d-restricted Vα4.4/Vβ9 transgenic mouse (Zeng et al., 1998) can be used to directly study these dNKT cell types.

Function of dNKT cells

The concept of iNKT and dNKT cells having different functional capacities is supported by a number of studies, several of these describing a pro-inflammatory function for dNKT cells. The first study showed that CD1$^{-/-}$ mice but not Jα18$^{-/-}$ mice were more susceptible to diabetogenic encephalomyocarditis virus (ECMV-D), suggesting a protective role for dNKT cells but not for iNKT cells. Resistance is known to be dependent on IL-12 and IFN-γ, implying that dNKT cells promote a protective inflammatory response (Exley et al., 2001). A second viral study demonstrated that during a Hepatitis B Virus (HBV) infection, in a transgenic transfer mouse model, hepatic NK1.1^{+} αβT cells but not iNKT cells induced the liver injury normally associated with HBV pathogenesis. Upon infection, the hepatic NK1.1^{+} αβT cells, in a CD1d-dependent manner, mediated liver damage and produced IFN-γ and to a lesser degree IL-4 (Baron et al., 2002). In addition, HBV infected human patients exhibited an up-regulation of CD1d in liver and dNKT cell clones derived from liver of these patients were shown to produce large amounts of IFN-γ and IL-13. Clones from patients at more progressed infection stages produced IL-4 as well (Durante-Mangoni et al., 2004). In another human system, patients suffering from ulcerative colitis (UC), believed to have a Th2-powered pathology driven by IL-4 and IL-13, contained increased numbers of dNKT cells in the lamina propria of the colon. These lamina propria dNKT cells produced IL-13 that enhanced the dNKT cell-mediated cytotoxicity of epithelial cells (Fuss et al., 2004). During a *T. cruzi* infection, murine dNKT cells appear to induce a detrimental inflammatory response associated with increased levels of IFN-γ and TNF-α, while the presence of iNKT dampens the inflammation, possibly by regulating the pro-inflammatory dNKT cells (Duthie et al.,

2005b). In contrast to above described data, dNKT cells have been shown to also have a non-inflammatory regulatory capacity. Over-expression of iNKT cells has previously been shown to protect non-obese diabetic (NOD) mice from developing diabetes (Lehuen et al., 1998). Recently, over-expression of dNKT cells in NOD mice has also been observed to mediate a protective effect, demonstrating a regulatory role in autoimmune diabetes for both subsets (Lehuen et al., 1998) (Duarte et al., 2004). Also, a role in suppressing anti-tumor-immunity has been ascribed dNKT cells. The suppression was shown to be dependent on TCR-CD1d interaction (Terabe et al., 2005). Finally, treatment with sulfatide protected mice from experimental autoimmune encephalo-myelitis (EAE) by activating a dNKT cell population, which then inhibited cytokine production by pathogenic myelin-reactive T cells (Jahng et al., 2004). Thus dNKT cells are capable of mediating a diverse array of effects similar to those mediated by iNKT cells.

Human iNKT cell subsets

iNKT cells can be divided into subsets depending on expression of the co-receptors CD4 and CD8 (Takahashi et al., 2002). In human, the relative frequency between the subsets varies between donors, but is generally 50% $CD4^+$, 25% DN, 25% $CD8^+$ (Kim et al., 2002b). The DN and $CD8^+$ iNKT cells are very similar to one another with regard to chemokine receptor and NK receptor expression and cytokine production. While all subsets produce IFN-γ and TNF-α only the $CD4^+$ iNKT cells produce high levels of IL-2, IL-4 and IL-13 (Takahashi et al., 2002) (Gumperz et al., 2002). The $CD4^+$ iNKT cells preferentially express CCR4 while DN or $CD8^+$ iNKT cells preferentially express CCR1, CCR5, CCR6, and CXCR6 in addition to NK receptors such as 2B4, CD94/klrd1, NKG2A, and NKG2D (Gumperz et al., 2002; Kim et al., 2002b; Lee et al., 2002). Thus, the $CD4^+$ iNKT cell subset appears to have a greater potential for inducing Th2 responses while the DN and $CD8^+$ iNKT cell subsets are more associated with NK receptor expression. A functional study has also shown that, the $CD4^+$ but not the $CD4^-$ iNKT cell subset, produces high levels of IL-2 upon activation, thereby enhancing proliferation of $CD4^+$ $CD25^+$ regulatory T cells (Jiang et al., 2005).

Protective effects in autoimmune disorders

A protective role for NKT cells has been described in several autoimmune disorders, such as multiple sclerosis (MS), rheumatoid arthritis (RA), systemic lupus erythematosis (SLE), and type 1 diabetes. A general feature of both human patients and autoimmune-susceptible mouse strains is the quantitative and qualitative defects of the NKT cell population.

EAE is a murine MS model. SJL mice, which spontaneously develop EAE, have been shown to have reduced numbers of $NK1.1^+$ $CD4^+$ cells and a deficient IL-4 production (Yoshimoto et al., 1995). αGalCer can confer either protection or induce detrimental effects depending on administration route and regime. A protective effect was believed to be associated with an IL-4- and/or IL-10-dependent shift towards a beneficial Th2 response (Singh et al., 2001). Interestingly, protection from EAE development in the iNKT transgenic mouse was associated with a strong inhibition of IFN-γ rather than a shift towards Th2. This shift was independent of IL-4 (Mars et al., 2002). $CD1^{-/-}$ mice develop more severe EAE, accompanied by a reduction in influx of TGF-β1-producing cells in the CNS (Teige et al., 2004). In humans, a majority of relapse MS patients showed a decrease in Vα24 transcripts in peripheral blood (Demoulins et al., 2003) with an accompanying decrease in IL-4 secretion from the DN iNKT cells (Gausling et al., 2001).

The NOD mouse strain spontaneously develops diabetes and is a frequently used animal model for type I diabetes. The NOD mouse exhibits reduced numbers of DN αβT thymocytes, a population enriched for NKT cells (Godfrey et al., 1997) coupled with a defective IL-4 production among the remaining population (Gombert et al., 1996). $CD1^{-/-}$ NOD mice display a more severe diabetes development with an earlier onset compared to control NOD mice (Shi et al., 2001). Also, transgenic over-expression of invariant TCRα (Vα14) protected against diabetes development, as did transfer of thymocytes enriched for NKT cells or transgenic NKT cells carrying a

diverse TCRα (Hammond et al., 1998; Lehuen et al., 1998) (Duarte et al., 2004). NKT cells are suggested to confer protection, by inducing a Th2 shift in the pancreatic islet (Laloux et al., 2001) and by preventing auto-reactive $CD4^+$ and $CD8^+$ T cells to develop into effector cells (Beaudoin et al., 2002). Upon αGalCer administration, NKT cells have also been observed to induce and recruit tolerogenic DCs to the pancreatic LNs (Naumov et al., 2001).

Mediating tolerance to foreign antigen

Oral tolerance, important for avoiding unwanted reactions to commensal bacteria and food antigens, is defined as systemic suppression of immune reactions to antigens that have been orally administered. $CD1d^{-/-}$ mice exhibit impaired induction of oral tolerance to OVA. The Peyer's patches (PP) and spleen of $CD1d^{-/-}$ mice were deficient in tolerogenic DCs, had reduced levels of IL-10 and TGF-β, and inadequately deleted OVA-specific $CD4^+$ T cells. Adoptive transfer of iNKT cells restored oral tolerance and the induction of tolerogenic DCs in PP and spleen, confirming a role for NKT cells in the induction of oral tolerance (Kim et al., 2006a). A second study showed that iNKT cells were necessary for inducing oral tolerance to nickel. iNKT cells were suggested to, in a IL-10- and IL-4-dependent manner, induce tolerogenic APCs, which could then, independently of iNKT cells, induce nickel specific regulatory T cells (Roelofs-Haarhuis et al., 2004).

NKT cells have also been shown to play a role in supporting tolerance to transplanted grafts. iNKT cells were required for acceptance of rat pancreatic islet xenografts transplanted into murine liver (Ikehara et al., 2000). In addition, iNKT cells were shown to play a role in long-term tolerance to cardiac allografts, in either a IFN-γ-dependent manner (Seino et al., 2001) or an IL-4/IL-10-dependent manner (Higuchi et al., 2002; Lan et al., 2003).

Brain, pregnant uterus, and eye are all immune privileged body sites, so called due to the low prevalence of immune-mediated inflammation and allograft rejection at these sites. Various mechanisms are involved in maintaining this immune privileged status,

such as limited or no lymphatic drainage and the presence of multiple immuno-suppressive factors such as FasL, TRAIL, TGF-β, indoleamine 2,3-dioxygenase (IDO), complement inhibitors, and low expression of MHC class I (Niederkorn, 2006). The anterior chamber-associated immune deviation (ACAID) model has been used to delineate the complex mechanisms that contribute to the immune privilege of the eye. ACAID was clearly shown to be NKT cell-dependent as tolerance was lost in $CD1d^{-/-}$ mice but restored by transfer of $NK1.1^{+}$ αβT cells (Sonoda et al., 1999). Subsequent studies illuminated the intricate collaboration between the various immune cell types that ACAID dependence on. Antigen introduced into the anterior chamber of the eye is captured by $F4/80^{+}$ APCs (believed to be macrophages), which then enter the circulation and within 24 hours from injection induce homing of DN $NK1.1^{+}$ thymocytes to spleen (Wang et al., 2001). The ocular $F4/80^{+}$ APCs also home directly to the marginal zone of the spleen where they secrete MIP-2/CXCL2, which leads to recruitment of $NK1.1^{+}$ αβT cells into spleen (Faunce et al., 2001). ACAID was shown to critically rely on IL-10 produced by iNKT cells (Sonoda et al., 2001) as well as on $NK1.1^{+}$ αβT cell-secreted RANTES/CCL5, which recruits additional $F4/80^{+}$ APCs and $CD8^{+}$ T cells into the MZ (Faunce and Stein-Streilein, 2002). NKT cells, $F4/80^{+}$ APCs, $CD1d^{+}$ MZ B cells (Sonoda and Stein-Streilein, 2002), and $CD8^{+}$ T cells then co-localize, resulting in generation of regulatory $CD8^{+}$ T cells, which can actively suppress effector Th1 and Th2 cell function (Nakamura et al., 2003).

Beneficial and detrimental effects during tumor rejection

Upon activation with IL-12, hepatic $NK1.1^{+}$ TCR^{int} cells exhibit enhanced cytotoxicity against tumor cell lines and reduced tumor metastases (Hashimoto et al., 1995) (Takeda et al., 1996). It was found that iNKT cells were necessary for this IL-12-induced rejection of tumors (Cui et al., 1997). Also, αGalCer treatment induces iNKT cell-dependent anti-tumor activity against a number of carcinomas, thymomas, and melanomas in mice (Swann et al., 2004), but even in the absence of exogenous activators such as αGalCer or IL-12, iNKT cells can exhibit a crucial protective role against tumors (Smyth et al., 2000).

iNKT cells use a diverse battery in mediating cytotoxic killing of tumor targets, including IFN-γ, granzyme B, perforin, FasL, and TRAIL. Though NKT cells certainly have the capacity to directly lyse tumor cells, it is believed that their major contribution to anti-tumor immunity is the early production of IFN-γ. IFN-γ produced by NKT cells is important for activation of DCs and NK cells, which together with Th1 and CTLs, are important mediators of anti-tumor activity (Seino et al., 2005). Another effect of IFN-γ is the inhibition of angiogenesis (Hayakawa et al., 2002). Similar to murine iNKT cells, human iNKT cells have also been shown to exhibit potent perforin- and TRAIL-mediated cytotoxicity against tumor cells. Since activated human iNKT cells express FasL and granzyme B, these molecules could potentially also be involved in tumor cytotoxicity (Seino et al., 2005).

In contrast to above described results, detrimental effects of NKT cells in tumor immunity have been reported as well. As CD1d$^{-/-}$ mice rejected fibrosarcoma and mammary carcinoma tumors that grew in wild type mice, NKT cells were suggested to suppress anti-tumor immunity. NKT cells appear to use different suppressive mechanisms in these two models, IL-13 being important for acceptance of the sarcoma but not for the carcinoma (Ostrand-Rosenberg et al., 2002; Terabe et al., 2000).

NKT cells participate in the immune response to various types of pathogen such as parasites, fungi, virus, and bacteria. The effect of this participation depends on the identity of the pathogen as well as the genetic background of the host, with the result that NKT cells can mediate either protective or detrimental immune responses.

Modulating immune responses during parasite infections

Trypanosoma cruzi (*T. cruzi*) and *Leishmania (L. major, L. donovani,* and *L. infantum)* are two examples of intracellular parasites against which NKT cells have a protective role. During infection with *L. major*, iNKT cells were shown to be crucial for expression of the anti-apoptotic 65kDa heat shock protein (HSP65) by parasite infected macrophages. HSP65 being a prerequisite for acquisition of protective immunity (Ishikawa et al., 2000). The protective role of NKT cells was apparent also in *L. donovani* infection, where $CD1^{-/-}$ mice exhibited an increased disease-susceptibility. The hepatic iNKT cells very rapidly produced IFN-γ in an IL-12-independent but CD1d-interaction-dependent manner, both in response to parasite infection and to stimulation with *L. donovani* surface lipophosphoglycans (Amprey et al., 2004). During infection with *L. infantum*, human iNKT cells, but not NK cells, produced IFN-γ and efficiently killed infected immature DCs. The iNKT-cell mediated killing was dependent on up-regulation of CD1d by the DC and the presence of iGb3 (Campos-Martin et al., 2006). In the *T. cruzi* model, activation of NKT cells was shown to require a combination of IL-12 and TCR-CD1d interaction. Interestingly, iNKT and dNKT cells appear to have different effects on the immune response to *T. cruzi*; with dNKT cells inducing a detrimental inflammatory response, while iNKT dampens the inflammation, possibly by regulating the pro-inflammatory dNKT cells (Duthie et al., 2005a) (Duthie et al., 2005b).

Finally, *Plasmodium berghei* (*P. berghei*), which induces murine cerebral malaria, is a good example of a pathogen against which NKT cells have varied effect depending on the genetic background of the host animal. In BALB/c mice the presence of CD1d,

and by extension the presence of CD1d-restricted cells, favours beneficial Th2 polarization in response to infection with *P. berghei* and subsequent resistance to disease. Thus, a CD1d$^{-/-}$ mouse on this background leads to increased susceptibility to cerebral malaria. On the other hand, on a C57Bl/6 background, the parasite induces IFN-γ production that is detrimental to the host and therefore an absence of CD1d reduces pathology (Hansen et al., 2003).

Protective effect in fungi infection

Cryptococcus neoformas (*C. neoformas*) is a fungus that can cause pneumonia and meningitis in immuno-compromised hosts. It was shown that iNKT cells accumulate in a MCP-1/CCL2-dependent manner in the lung of *C. neoformas* infected mice. Also, mice lacking iNKT cells had an impaired ability to control the infection, indicating a protective function of NKT cells in this system (Kawakami et al., 2001).

Diverse role during viral infections

NKT cells have been shown to confer protective immunity in several viral systems, including infection models with: murine cytomegalovirus (CMV), herpes simplex virus type 1 (HSV-1), respiratory syncytial virus (RSV) depending on genetic background of infected mice, hepatitis B virus (HBV), and diabetogenic encephalomyocarditis virus (ECMV-D). Interestingly, CD1d$^{-/-}$ mice were more susceptible to ECMV-D infection while Jα18$^{-/-}$ mice were comparable to controls suggesting a protective role for dNKT cells but not for iNKT cells (Exley et al., 2001).

In contrast, other viral infection models suggest that NKT cells have no crucial role in responding immunity, i.e. infection with lymphocytic choriomeningitis virus (LCMV) induces hepatic iNKT cells to go into apoptosis without apparent effect on the ensuing protective immunity (reviewed in (Skold and Behar, 2003) and (Kinjo and Kronenberg, 2005)).

Protective and detrimental effect on anti-bacteria immune responses

Just as with other types of pathogens, NKT cells can play either a protective and detrimental role in the immune response depending on what bacterial system is studied. A protective role for NKT cells has been described in infection models with *Sphingomonas, Pseudomonas aeruginosa* (*P. aeruginosa*), *Streptococcus pneumoniae (S. pneumoniae),* and *Borrelia*. In contrast, NKT cells have been shown to have a little or no effect on the control of *Mycobacterium tuberculosis* infection, though NKT cells have been shown to recognize the mycobacterial lipid PIM_4. Also, contradictory data on the role of NKT cells in *Toxoplasma gondii* and *Listeria monocytogenes (L. monocytogenes)* infections have been reported (reviewed in (Skold and Behar, 2003) and (Kinjo and Kronenberg, 2005)). Finally, the role of NKT cells in *Salmonella* infection will be described in the discussion of paper III.

The confusion regarding the role of NKT cells becomes apparent in the case of *L. monocytogenes* infections. In order to clear an infection with the intracellular bacteria, *L. monocytogenes*, the host must launch an efficient Th1 immune response. A protective effect of iNKT cells was suggested, as *L. monocytogenes* induced iNKT cells to produce IFN-γ and transfer of iNKT cells into lethally infected $Rag^{-/-}\gamma_c^{-/-}$ mice led to prolonged survival (Ranson et al., 2005). In contrast, detrimental effect were suggested for NKT cells as $CD1d^{-/-}$ mice or blocking with CD1d-mAbs induced increases in IL-12 and IFN-γ and decreases in IL-4 and TGF-β levels coupled with unchanged or prolonged survival in infected mice compared to uninfected controls (Szalay et al., 1999) (Arrunategui-Correa et al., 2004).

In infection models where NKT cells had a clear protective role, the cells were generally observed to rapidly produce Th1 type cytokines such as IL-2 and IFN-γ upon activation, like in the immune response to *Sphingomonas* (Kinjo et al., 2005) but some studies also showed NKT cells to be involved in the recruitment of effector cells into infected tissue. Pulmonary infection with the extra-cellular bacterium, *P. aeruginosa* showed that, compared to controls, $CD1d^{-/-}$ mice had 100 times more bacteria in lungs, reduced levels of MIP-2/CXCL2, as well as a reduced recruitment of

neutrophils into infected lung. MIP-2/CXCL2 is secreted by activated macrophages and is important for the recruitment of both neutrophils and NKT cells. Neutrophils have been shown to play a central role in eliminating extra-cellular bacteria. Interestingly, antibody-blocking of CD1d led to decreased clearance of bacteria indicating that CD1d interaction is important for pathogen control. These data indicate that the protective role of NKT cells could be mediated through recruitment of neutrophil into the lung by promoting MIP-2/CXCL2 production during the early stage of *P. aeruginosa* infection (Nieuwenhuis et al., 2002). Another extra-cellular bacteria against which, NKT cells were shown to have a protective role was *S. pneumoniae,* a major causative agent of pneumonia. Mice lacking iNKT cells, very rapidly exhibited reduced amounts of MIP-2/CXCL2 and TNF-α in lung, followed by a decline in neutrophil influx. The subsequent 10,000 fold increase in bacterial numbers in lung, followed by the death of the majority of infected mice clearly showed that iNKT cells had a crucial role in host survival and recruitment of neutrophils into infected lung. Wild type mice exhibited an early MCP-1/CCL2-dependent recruitment of iNKT cells into infected lung (Kawakami et al., 2003).

CD1d was also shown to be important for the generation of protective antibodies by B cells in a *Borrelia hermsii* model. Splenic MZ B cells were rapidly activated *in vivo* during the acute phase of a *Borrelia* infection and were important producers of protective *Borrelia* specific antibodies. These responses were impaired in $CD1d^{-/-}$ mice. In contrast, MZB cell activation was retained in $J\alpha18^{-/-}$ mice, indicating that dNKT cells might assist in the generation of protective antibodies (Belperron et al., 2005).

In conclusion, NKT cells have been shown to play a decisive role, either protective or detrimental, in a number of infection models. This role appears to be the result of the NKT cells' rapid and potent cytokine production and ability to contribute to the activation of additional participating immune cell populations.

IMMUNE RESPONSES DURING *SALMONELLA* INFECTION

The murine *Salmonella* infection system has been well-described in many aspects, though surprisingly little was known about the role of NKT cells when we initiated our study (paper III). In this chapter, a brief description is given of the complex and multi-faceted immune responses the host must use to control and eradicate an infection with *Salmonella*.

Salmonella enterica serotype *Typhimurium* is a gram-negative facultative intracellular bacterium. Infection with *Salmonella* is naturally acquired through the gastrointestinal tract upon ingestion of contaminated food or water. *Salmonella* enters the host by crossing the intestinal epithelium and entering the lamina propria and PP, unless the infection is contained by the immune system, a subsequent dissemination to the draining mesenteric lymph nodes (MLN) and from there a systemic spread to spleen and liver is observed. *Salmonella* then replicates at systemic sites before reseeding the gut (Mittrucker and Kaufmann, 2000).

Apart from gut epithelial cells, macrophages and DCs, in the sub-epithelial dome overlying the PP, are probably the first cells to come into contact with the bacterium. Macrophages play a dual role; their capacity for phagocytosis of the bacterium, shared by neutrophils, is crucial for host survival, but is contrasted by their susceptibility to *Salmonella*-induced manipulation into providing shelter for the bacterium from the immune system. Bacteria are presumed to enter MLN and later blood and peripheral organs by way of afferent lymphatics, possibly sheltered inside infected circulating phagocytes or DCs (Srinivasan and McSorley, 2006).

TNF-α and particularly IFN-γ is crucial for clearing the infection (Nauciel and Espinasse-Maes, 1992). IFN-γ has been shown to be more important at earlier stages of infection (Pie et al., 1997), which correlates with the idea that the main contribution of IFN-γ is the vital activation of macrophages into competent killers of ingested bacteria (Kagaya et al., 1989). The main source of IFN-γ is believed to be NK cells, but

also T cells and B cells are thought to contribute (Mittrucker and Kaufmann, 2000). During infection, macrophages and DCs are major producers of IL-12 and IL-18, both potent enhancers of IFN-γ production. IFN-γ in turn will enhance IL-12 production resulting in a positive feedback loop (Eckmann and Kagnoff, 2001).

Phagocytes are especially important during the initial phase of the immune response when they ingest and kill large fractions of the bacteria, thereby containing bacterial numbers until the adaptive immune response has had time to evolve sufficiently to clear the infection from the host. DCs in the PP can acquire *Salmonella* antigens from infected cells that have gone into apoptosis (Yrlid and Wick, 2000), thereby gaining the ability to activate *Salmonella*-specific T cells. While $CD8^+$ αβT cells are important for secondary *Salmonella* challenge only, $CD4^+$ αβT cells are critical for control of primary and secondary infection (Hess et al., 1996; Lo et al., 1999). Early activation of *Salmonella*-specific $CD4^+$ αβT cells was suggested to occur in PPs and MLN (McSorley et al., 2002). T cells activated by DCs from PP and MLN acquired α4β7 and CCR9 expression, important for T cell homing to gut, which might be beneficial during infection with *Salmonella* (Campbell and Butcher, 2002; Stagg et al., 2002) (Mora et al., 2003). Immune responses of MHC restricted $CD4^+$ and $CD8^+$ αβT cells directed at *Salmonella* infection generally start one week after inoculation and reaches peak intensity one to two weeks later (McSorley et al., 2000) (Mittrucker and Kaufmann, 2000).

AIM OF THIS THESIS

The aim of this thesis was to expand our knowledge of what molecules are important for the development and function of NKT cells and what functions NKT cells perform during a *Salmonella* infection. To realize these aims we aspired to answer the following questions.

I. What gene expression signature defines the NKT cell population and what does it imply for lineage and functional aspects? NKT cells comprise a subpopulation of T cells with specific functional features and distinct requirements for development and activation. To learn more about what molecules are important for these distinct features, we performed an unbiased and encompassing microarray study, with the aim of defining a common NKT cell gene expression signature, shared by both dNKT and iNKT cells.

II. What do the unique gene expression profiles of the dNKT and iNKT cell subsets indicate with regard to subset-specific requirements for development, activation and effector functions? The NKT cell population is comprised of several subsets, distinguished by their differential expression of TCRs and functions during immune responses. We hypothesize that these functional differences are due to subset-unique functional programs, which would be apparent within the gene expression profiles. We wished to characterize the genes comprising these profiles in order to discover novel features relevant for development, activation and effector functions.

III. What role do NKT cells play in the immune response raised against a *Salmonella* infection? Upon activation, NKT cells rapidly perform effector functions, including the secretion of large amounts of immuno-regulatory cytokines, shown to have significant impact on the outcome of numerous pathogen infections. In order to study the role of NKT cells during a *Salmonella* infection, the NKT cells themselves were examined for localization, activation, and cytokine production, while the effect of NKT cells on *Salmonella* immunity was studied indirectly by examining bacterial load and other immune cell populations in mice lacking NKT cells.

I. Gene expression signature of CD1d-restricted natural killer (NK) T cells. Emma Berntman, Martin Stenström, Emma Smith, Julia Rolf, Robert Månsson, Mikael Sigvardsson and Susanna L Cardell. *Manuscript*

We performed microarray experiments on both dNKT and iNKT cells and identified a set of genes shared by the two subsets but not by convetional T cells. We propose that these genes constitute the common gene expression signature of NKT cells. Our results suggested that NKT cells were predetermined for inflammatory and cytotoxic actions, while sharing many similarities with NK cells in activation and function. Both NKT cell subsets expressed chemokine and integrin genes associated with migration into inflamed tissue as well as to specialized locations such as gut and lung. In addition, we showed that NKT cells over-expressed LIGHT, which potentially confers a novel way for NKT cells to induce NK cell mediated cytolysis. NKT cells were also demonstrated to specifically over-express several transcription factors, among them Aiolos, Id2, and eomesodermin, who's putative roles in NKT cell biology is important to examine further. In addition to providing a novel insight into which molecules may be determining NKT cell development, activation and function, the gene expression signature of NKT cells offers information as how to best manipulate the NKT cell population during various diseases and infections.

II. Molecular profiling of functionally distinct CD1d-restricted natural killer (NK) T cell subsets. Emma Berntman, Julia Rolf, Hanna Stenstad, Martin Stenström, William Agace, Mikael Sigvardsson and Susanna L Cardell. *Manuscript*

The NKT cell population is comprised of several functional subsets but can be broadly divided into two subsets, dNKT and iNKT cells, based on the expression of different TCRs. While dNKT and iNKT cells share a common NKT cell gene expression profile (paper I), the subsets also have unique features not contained within this profile. Thus, we also identified two different gene sets specifically over-expressed by the dNKT and iNKT cell subsets. Data implied that dNKT and iNKT cells carry

distinct collections of activating and inhibitory NK receptors, indicating that the subsets can be differentially activated. Particularly, the novel role of CRACC in NKT cell cytotoxicity should be further studied. In addition, dNKT cells appear to be firmly associated with Th1-type reactions while iNKT cells appear to have an enhanced cytoxic potential together with an enhanced potential to stimulate Th2-associated immune responses compared to dNKT cells. In the future it would be interesting to identify genes that imprint the different functional programs in the NKT cell subsets and to examine to what extent the different subsets are activated by non-TCR stimuli.

III. The role of CD1d-restricted NK T lymphocytes in the immune response to oral infection with *Salmonella Typhimurium.* Emma Berntman, Julia Rolf, Cecilia Johansson, Per Anderson and Susanna L Cardell. *Eur. J. Immunol.* 2005. 35:2100-2109

Upon activation, NKT cells rapidly perform effector functions, including the secretion of large amounts of immuno-regulatory cytokines, shown to have significant impact on the outcome of numerous pathogen infections. We wished to determine how NKT cell were affected by *Salmonella* infection and what effect NKT cells had on immune responses directed at the infection, with focus on the early phase of the infection. In this study, bacteria were administered orally, leading to the bacteria disseminating along the natural infection route. In order to attain an early and synchronised infection, mice were given a lethal dose of bacteria. Thus, it was not surprising that the lack of NKT cells was not observed to affect neither bacterial load nor the infection-induced increases in macrophage and neutrophil presence and accompanying decreases in frequency of B and T cells. However, we showed that NKT cells were clearly activated by the *Salmonella* infection as established by increased expression of activation markers and early production of IFN-γ. Additionally, *Salmonella* bacteria or LPS induced DCs to up-regulate CD1d expression *in vitro*, though this was not observed on the total DC populations in spleen and liver *in vivo*. Additionally, infection was shown to polarise the NKT cell cytokine profile, into a protective IFN-γ^{high} IL-4^{low} profile.

The complex and heterogenous NKT cell population is comprised of several NKT cell subsets, which based on the expression of different TCRs, can be divided into two subsets, the dNKT and iNKT cell subsets. These subsets have been clearly shown to have distinct phenotypes and functional capacities. The $CD69^{+}$ $CD49b^{low/-}$ $CD4^{+}$/DN phenotype, linked with the production of high amounts of IL-4 and moderate amounts of IFN-γ, separates the iNKT cells from the $CD49b^{hi}$ and predominately DN dNKT cells, which produce low amounts of IL-4 and high amounts of IFN-γ (Stenstrom et al., 2004). That iNKT and dNKT cells have distinct functional properties is supported by several studies showing that the two subsets have diverse effects in the same experimental model system (Exley et al., 2001) (Baron et al., 2002) (Duthie et al., 2005b) (Terabe et al., 2005).

These observed functional differences between the dNKT and iNKT cell subsets could partly be explained by the subsets expressing distinct TCRs and consequently recognizing different ligands. The presence of an appropriate ligand could then determine in what immunological situation the individual subsets are activated. Additionally, the individual TCRs could impose distinct functional programs on the NKT cell subsets during thymic differentiation. These programs would then govern what effector functions a particular NKT cell subset could mediate. If the TCR decides what functional program is initiated, then the dNKT and iNKT cells, which have different TCRs, would have subset-unique gene expression signatureS.

Additionally, for several reasons iNKT cells have been more thoroughly studied than the dNKT cells. Access to efficient tools for identifying and studying this particular subset and its functions is one reason as is the prominent presence of iNKT cells in mouse, where approximately 50% of all $NK1.1^{+}$ αβT cells belong to this subset. These tools include αGalCer, which is used to specifically activate iNKT cells (Kawano et al., 1997) (Spada et al., 1998) and when loaded onto CD1d-multimers, exclusively identifies iNKT cells (Matsuda et al., 2000) (Benlagha et al., 2000). Additional important

tools for revealing the role of iNKT cells in immune responses are the Vα14 transgenic mouse (Bendelac et al., 1996), which over-expresses iNKT cells and the $J\alpha18^{-/-}$ mouse, which lack all iNKT cells (Cui et al., 1997). Due to efficient use of these instruments, great progress has been made over the last ten years in divulging the effector functions and roles of iNKT cells in a multitude of immunological systems. An unfortunate parallel effect of the focus on this subset is the notion that iNKT cells are the archetypical NKT cells.

It is important to keep in mind that iNKT cells only constitute around half of the murine $NK1.1^+$ αβT cells. Though not all $NK1.1^+$ αβT cells are restricted by CD1d, it is likely that a substantial portion of the remaining cells belong to the dNKT cell subset, as 30-80% CD1d-restricted NKT cell clones isolated from mouse express non-invariant TCRs (Behar et al., 1999) (Chiu et al., 1999). This is supported by a study that shows that a sulfatide-reactive dNKT cell population constitute 4% (Jahng et al., 2004) while iNKT cells constitute 30% of liver lymphocytes in mouse (Matsuda et al., 2000), demonstrating that dNKT cells are present in sufficiently high numbers to warrant an increased interest. Even more striking is the low presence of iNKT cells in humans, where studies have suggested that only 1% of $NK1.1^+$ αβT cells belong to iNKT cell subset, suggesting an even more substantial presence of dNKT cells in humans. This is supported by studies showing that the majority of CD1d-restricted NKT cell clones isolated from human liver express non-invariant TCRs (Exley et al., 2002). The observation that recurring usage of certain TCR chains occur also among the dNKT cell subsets (Chiu et al., 1999) (Park et al., 2001), suggests that additional subsets using a restricted TCR repertoire will be found among the dNKT cell subset. These dNKT cell populations, which constitute what we today refer to as the dNKT cells, will probably have similar phenotypes and perform Th1-associated functions, as the dNKT cell subset, as a whole, is so clearly distinct from iNKT cells in these aspects.

With all the arising data supporting distinct functions linked to dNKT cells, it is important to include both dNKT and iNKT cells when considering the NKT cell population, to get a correct idea of what immunological roles the NKT cell population

is capable of playing. In order to get an unbiased, general view of what defines the NKT cell population, we examined the entire genome in the hope of identifying genes or groups of genes associated with a unique NKT cell gene expression profile.

AIMS OF PAPERS I AND II

The aim of paper I was to define a common gene expression signature for the NKT cell population, shared by both dNKT and iNKT cells, but distinct from conventional T cells and determine what the gene expression signature implies for lineage and aspects of migration, activation, and effector functions. The aim of paper II was to define gene expression profiles unique for the functionally distinct dNKT and iNKT cell subsets and to characterize these different profiles in order to discover novel features relevant for development, activation and effector functions.

METHOD OF PAPERS I AND II

In order to examine the genome's global activity, in an unbiased and inclusive manner, we used Affymetrix microarray technology. Microarrays yield an enormous amount of data, up to 45,000 data points per sample. There are both positive and negative facets of working with such massive amounts of information. One of the positive aspects is the snap-shot that the microarray provides of the examined cell sample, giving a unique over-view of all the complex and multi-layered molecular processes occurring at that moment. Additionally, it becomes relatively simple to determine genetic kinship between various cell types as well as providing the possibility of finding novel genes important for a certain process or cell. On the negative side is definitely how unwieldy and over-whelming such a staggering amount of data is. Thus, the majority of work with microarrays is constituted of performing various kinds of statistical and mathematical analysis using specialized microarray analysis software and performing extensive literature searches in order to characterize and group the genes that have attracted special attention.

We performed microarray experiments on both unstimulated and stimulated iNKT cells, dNKT cells and a reference $CD4^+$ T cell population. In this study we chose to focus on the unstimulated samples, and the results from the analysis of these microarrays will be discussed in this thesis. In addition to the results presented in this study, there is still a substantial quantity of informative data left among the unstimulated samples and also the stimulated samples are expected to yield interesting information, in particular, with regard to function and activation responses. In this study, we were interested in genes relevant for development, activation and effector functions of unstimulated NKT cells and for these genes we searched the gene expression profiles of the NKT cell population and of the individual NKT cell subsets. Apart from actively searching for genes and groups of genes known to have certain functional or lineage implications, we also carefully searched for new and unknown genes that imply novel functions and developmental requirements.

When this study was initiated, only one group had performed genome wide screens of NKT cells, but had in all published surprisingly little data. Firstly, iNKT cells clones from healthy and diabetic twins were compared (Wilson et al., 2000), while in the second study, an activated human iNKT cell clone was compared with $CD4^+$ and $CD8^+$ T cell clones. Of the 12,000 genes analyzed, 5(!) genes were described to be up-regulated by the iNKT cell clone, CD161, TCR Vα24, CD69, MIP-1α/CCL3, and granzyme B (Wilson and Byrne, 2001). Our study is the first with the aim of defining a NKT cell gene expression profile shared by both dNKT and iNKT cells. Additionally, our study is the first to have performed a complete genomic analysis of a dNKT cell population. We presumed that our microarray data would yield certain information. Thus, we expected the NKT cells to specifically express a number of genes distinct from those expressed by the reference $CD4^+$ T cells and within the NKT cell associated gene expression profile, we expected to find genes already described to be characteristic of NKT cells as well as numerous previously un-described genes.

In this study, the two NKT cell populations were represented by $NK1.1^+$ $TCR\beta^+$ splenocytes sorted from Vα14 and 24αβ transgenic mice, which have enlarged popula-

tions of iNKT cells and a dNKT cell type, respectively. As a control population of conventional T cells, NK1.1$^-$ CD4$^+$ cells from non-transgenic littermates were used. RNA was then isolated from the highly purified cell populations (96-99% pure) and hybridized to Affymetrix Mouse Genome MOE430 2.0 chip, which contains 45,101 probesets representing transcripts of roughly 34,000 genes. The expression data was then processed using dCHIP, a microarray analysis software, and the resulting expression levels were compared between the three populations. Genes were considered to be differentially expressed between populations if the difference was observed to be two-fold or higher. The NK1.1$^+$ TCRβ^+ cells from the Vα14 and 24$\alpha\beta$ transgenic mice will be referred to in the text as iNKT and dNKT cells, respectively, while the NK1.1$^-$ CD4$^+$ cells from the non-transgenic littermates will be referred to as CD4$^+$ T cells.

In our data we found many genes that were differentially expressed between the three populations and thus selected these for further investigation. In the next section an assortment of genes and gene groups will be discussed with regard to their known and putative role in NKT cell biology.

RESULTS AND DISCUSSION OF PAPERS I AND II

The relationship between NKT/CD4+ T cells and dNKT/iNKT cells

We performed a high level analysis called hierarchical clustering, where all expression values from the array of one sample was compared to all expression values from the arrays of all the other samples, thereby yielding information as to the degree of kinship between the three cell types on a global gene level. The hierarchical clustering analysis clearly showed that, on the genomic expression level, the two NKT cell subsets were more related to one another than to the CD4$^+$ T cells. The close relationship between dNKT and iNKT cells was also apparent as the two NKT cell subsets had 180 over-expressed genes in common when compared to CD4$^+$ T cells, while CD4$^+$ T cells only shared 48 and 26 over-expressed genes with dNKT and iNKT cells, respectively (figure 6). Of course, these 48 and 26 genes were interesting as they are part of the

NKT cell subset-associated gene expression profiles. The 180 genes jointly over-expressed by both NKT cell subsets compared to the $CD4^+$ T cells, constituted the NKT cell specific gene expression signature (figure 7). Some genes within the NKT cell gene expression signature were over-expressed to different levels by the two subsets (paper I, figure 2), suggesting that the subsets make distinct use of these genes. In addition, dNKT cells over-expressed 56 genes compared to $CD4^+$ T and iNKT cells, while iNKT cells over-expressed 74 genes compared to $CD4^+$ T and dNKT cells. Paper I focused on the 180 over-expressed genes classified as NKT cell specific while paper II focused mainly on the 56 and 74 genes uniquely over-expressed by the dNKT and iNKT cell subsets, respectively.

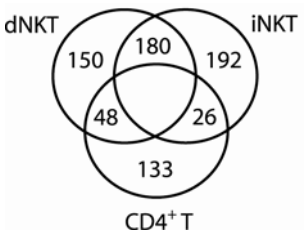

Figure 7. Number of over-expressed genes unique to and shared by dNKT, iNKT and $CD4^+$ T cells.

NKT cells over-expressed genes typical of non-conventional T lymphocytes

NKT cells constitute one of the non-conventional T lymphocyte populations and as such they display certain characteristic traits generally associated with innate immunity such as receptor rearrangement that results in semi-invariant TCRs, self-reactivity, specific localization to non-lymphoid tissue, and an inclination to promptly respond to challenge. We therefore hypothesized that NKT cells would have over-expressed genes in common with other non-conventional T lymphocyte populations and that these genes would be causative of the non-conventional lymphocyte characteristics. In order to test this hypothesis, we compared our data with gene sets reported to be characteristic for the non-conventional T lymphocytes; CD8αα αβT cells (Yamagata et al., 2004) and γδT cells (Fahrer et al., 2001) (Pennington et al., 2003). We found that NKT cells shared over-expression of several genes associated with NK cell activation,

function and differentiation, such as inhibitor of DNA binding 2 (Id2), FasL, CD94, 2B4, FcεRIγ, and RANTES/CCL5 with both CD8αα αβT cells and γδT cells. Over-expression of additional genes associated with migration and positively regulating NK cell-function, such as NK1.1/Klrb1c, CD160, Klrb1a, IL-18R1, peptidoglycan recognition protein (Pgrp), xanthine dehydrogenase, and CXCR3 were specifically shared with CD8αα αβT cells, while over-expression of genes coding for granzyme A and IL-2Rβ was specifically shared with γδT cells (paper I). Additionally, we demonstrated that dNKT cells over-expressed annexin A2, kit, Ly6C, and DAP12; four genes reported to be characteristic of non-conventional CD8αα αβT cells (paper II) in addition to the 13 genes described above, which were jointly over-expressed by both NKT cell subsets.

The existence of a broader gene expression signature including both non-conventional B and T lymphocytes is supported by a recent study, where CD8αα αβT cells, NKT cells and B1 B cells were compared. The resulting list of genes includes some genes mentioned above (such as CCR5 and DAP12) but focuses mainly on genes coding for GTP-binding proteins. This study appears to include genes that are ≥1,3-fold higher expressed by the non-conventional lymphocytes in comparison to their conventional lymphocyte counterparts (Yamagata et al., 2006). As their GTP-binding proteins are only 1,3-2,5 fold higher expressed among NKT cells compared to their control T cell population, we believe our more stringent cut-off value (≥2-fold higher expressed) explains why we only observed 2/11 genes (Rhoq and Gem) coding for GTP-binding proteins in our NKT cell specific gene expression signature. A lower cut-off value in our study would include an additional 2 GTP-binding protein genes (Rab 4a and Sos2).

In summary, we demonstrate that the 180 over-expressed genes classified as NKT cell specific contained a number of genes included in other non-conventional T lymphocyte gene expression signatures. Many of these genes encode proteins that are important for mediating activating signals to NK cells and involved in performing NK cell effector functions of a cytotoxic character, while other genes support development of Th1 and inflammatory responses. This suggests that there is a gene expression

signature shared by non-conventional T lymphocytes, endowing these cell populations with similar functional traits, such as non-TCR mediated ways of activation, a many-faceted cytotoxic ability, and involvement in inflammatory responses.

Transcription factors selectively associated with the NKT cell population

We showed that several transcription factors were among the 180 over-expressed genes classified as NKT cell specific (paper I, figure 5). For example, Id2, a negative regulator of B cell activation (Sugai et al., 2004), which appears to be generally expressed by non-conventional T lymphocytes, was also preferentially expressed by both NKT cell subsets. Additionally, another transcription factor called Aiolos, thought to influence BCR and TCR signaling thresholds (Schmitt et al., 2002), was over-expressed by NKT cells. One could hypothesize that Id2 and Aiolos are involved in mediating survival of NKT cells during thymic negative selection or play a role in setting the activation threshold of NKT cells.

Further, we demonstrated that T-box expressed in T cells (T-bet), which belongs to the T-box gene family, was expressed at enhanced levels in NKT cells. T-bet is suggested to act as a master regulator of development of naïve $CD4^+$ T cells into Th1 cells (Mullen et al., 2002), naïve $CD8^+$ $\alpha\beta$T cells into effector cells (Sullivan et al., 2003) (Glimcher et al., 2004) and of NK and iNKT cells (Townsend et al., 2004).

While several transcription factors, such as AP-1, Ets1, Runx1 and RORγt, are required for development of iNKT and $NK1.1^+$ $TCR\beta^+$ cells (see development chapter), little is known about what genes they control in NKT cells. This makes a recent publication delineating the effects of T-bet in iNKT cells development extra interesting. This study shows that development of iNKT cells is dependent on T-bet for appropriate expression of CCR5, CXCR3, FasL, and CD122 and at later stages of thymic development also for IFN-γ, granzyme B, perforin, NK1.1, and RANTES/ CCL5 (Matsuda et al., 2006). We also observed that CCR5, CXCR3, FasL, CD122, IFN-γ, NK1.1, and RANTES/CCL5 were specifically over-expressed by both subsets of NKT cells, suggesting that T-bet might be equally important for the appropriate expression of these genes during development of dNKT cells as it is for iNKT cells.

Additionally, T-bet regulates the cytolytic effector mechanisms of NK cells(Glimcher et al., 2004), while cytolytic effector mechanisms of $CD8^+$ αβT cells are regulated by both eomesodermin, another T-box family member, and T-bet (Pearce et al., 2003). We showed that eomesodermin was over-expressed by both dNKT and iNKT cells compared to conventional $CD4^+$ T cells, though dNKT cells expressed eomesodermin at 3-4 fold higher levels compared to iNKT cells. It is possible that T-bet and eomesodermin might be involved in regulating the cytotoxic effector functions of NKT cells in general and of dNKT cells in particular. Moreover, eomesodermin is also involved in the induction of IFN-γ in $CD8^+$ αβT cells (Pearce et al., 2003). Thus, the high IFN-γ/low IL-4 cytokine production typical of dNKT cells (Stenstrom et al., 2004) might be partly dependent on eomesodermin, and this deserves to be studied further.

In summary, paper I presents several transcription factors specifically over-expressed by NKT cells. Id-2, Aiolos, T-bet, and eomesodermin, which have been further discussed here, are known to regulate activation thresholds, development, cytokine and cytotox functions in other immune cells. While the role of T-bet has been studied during iNKT cell development, the others are, to our knowledge, novel finds and their putative role in NKT cell biology needs to be specifically examined.

Activation and Regulation of NKT cells: expression of NK receptors

In addition to the TCR, NKT cells express other surface receptors, such as NK receptors, involved in modulating activation and effector functions. NKT cells are known to express several NK receptors, though whether they regulate NKT cell-function in the same way they regulate NK cell-function is not known. Upon a general examination of differences in NK receptor gene expression (paper I, figures 4 and 5), NKT cells were observed to express higher levels of 19 out of 20 NK receptor genes when compared to $CD4^+$ T cells. These data confirmed and extended previous reports of NKT cells expressing and being regulated by both activating and inhibitory NK receptors.

dNKT and iNKT cells differ in putative regulation by NK receptors

Activating NK receptors mediate an activating signal when expressed by NK cells, but function purely as co-stimulatory molecules when expressed by conventional effector or memory T cells. This duplicity in functional activity of NK receptors is thought to depend on what adaptor molecules the NK receptors associate with. While T cells generally only express the adaptor molecule DAP10, NK cells express both DAP10 and DAP12, with DAP12 intimately involved in mediating activating signals (Snyder et al., 2004). We showed that DAP12 was over-expressed specifically by dNKT cells (paper II, figure 2), so hypothetically signaling through NK receptors could directly activate, rather than co-stimulate, dNKT cells into performing effector functions. In addition to DAP-12, dNKT were also observed to specifically over-express the activating NK receptor Ly49S and the IgG receptor FcγRIII/CD16, commonly expressed by and known to induce activation of NK cells, indicating that dNKT cells can receive activating signals in ways distinct from iNKT cells. While both NKT cell subsets generally expressed similar levels of activating NK receptors, the inhibitory NK receptors tended to vary in expression levels between the dNKT and iNKT cell subsets (see paper I, figure 4). We showed that iNKT cells over-expressed the inhibitory NK receptors Klrb1b, Klrb1d and glycoprotein 49B (paper II, figure 2). This would suggest that the subsets could respond differently to infected or damaged cells, depending on what NK receptor ligands these cells expressed.

Expression of cytokine receptors by NKT cells

In addition to NK receptors, we showed that NKT cells also constitutively expressed genes encoding IL-2Rβ, IL-18R1 and IL-18R accessory protein. The IL-2Rβ chain is a component of both IL-2R and IL-15R, indicating that NKT cell function is specifically regulated by IL-2 and/or IL-15 and IL-18. IL-15 is crucial for homeostatic survival and proliferation of iNKT cells (Ranson et al., 2003) and has also been observed to enhance cytotoxic activity and IFN-γ production by NK cells, and IFN-γ production by γδT cells (Carson et al., 1994) (Carson et al., 1995) (Garcia et al., 1998). Further, IL-18 has been shown to be involved in enhancing production of IL-2 and IFN-γ by

NK1.1$^+$ CD3$^+$ cells (Baxevanis et al., 2003). Potentially, IL-15 could have a similar role in enhancing cytokine and cytotoxic function in NKT cells as well as be important for homeostatic maintenance of dNKT cells in addition to iNKT cells, while IL-18 might enhance both the dNKT and iNKT cell production of Th1 cytokines. It was interesting that out of all the cytokine receptors we examined only IL-2Rβ and IL-18R1 were significantly over-expressed by NKT cells. The finding that both NKT cell subsets are constitutively poised to react to proliferation- and/or Th1-inducing signals, strengthens the importance that Th1-type of functions have in NKT cells performing their role in the immune system.

Migrational potential of NKT cells

We showed that NKT cells over-expressed genes known to be involved in migration, like the chemokine receptors CCR2, CCR5, CXCR3 and CXCR6, and the integrins α1 (Riken E130012M19) and αL (paper I, figures 5 and S1). While integrin α1, CCR2, CCR5, CXCR3 and CXCR6 are all involved in homing of immune cells into inflamed tissue, integrin αL in the form of αLβ2/LFA-1 plays a more general role in migration (Stein and Nombela-Arrieta, 2005). Our data confirms previous reports that showed that human and murine iNKT cells expressed CCR2, CCR5, CXCR3 and CXCR6 (Faunce et al., 2001; Kim et al., 2002a) (Johnston et al., 2003). Our data indicate that both dNKT and iNKT cells have a general migrational capacity similar to Th1 inflammatory homing cells suggesting that NKT cells perform their effector function in peripheral tissue.

Migrational potential of iNKT cells

While we showed that CCR2 and CCR5 over-expression was shared between dNKT and iNKT cells, iNKT cells expressed four to five times higher levels of CCR2 and three to four times higher levels of CCR5. Additionally, we demonstrated that CCR9 was selectively over-expressed by a subset of iNKT cells (paper II, figure 5). Thus, it is apparent that dNKT and iNKT cells express diverse repertoires of receptors involved in migration.

The biological relevance of our CCR2 data is supported by the observation that iNKT cells accumulate in a MCP-1/CCL2-dependent manner in lung during *C. neoformas* and *S. pneumoniae* infection (Kawakami et al., 2001) (Kawakami et al., 2003). MCP-1/CCL2 is the only known ligand for CCR2. CCR9 is well-known to be important for localization of T cells to the small intestine. In addition, CCR9 is also suggested to be involved in recruitment of T cells to chronically inflamed liver and lung as CCR9-expressing human T cells were shown to be recruited to liver in response to CCL25 in a chronic inflammatory liver disease (Eksteen et al., 2004). In addition, a large portion of human iNKT cells in blood from patients with allergic asthma were found to be $CCR9^+$ and were suggested to migrate into bronchial mucosa in a CCR9 dependent manner. In the same study CCR9/CCL25 ligation was shown to induce phosphorylation of Pta1/CD226 (Sen et al., 2005). Pta1 is an adhesion molecule known to enhance cytotoxicity of NK and $CD8^+$ T cells (Pende et al., 2005) (Tahara-Hanaoka et al., 2005). We showed that Pta1 is over-expressed by both iNKT and dNKT cells compared to $CD4^+$ T cells, with iNKT cells having a two-fold higher expression level compared to dNKT cells. Thus, ligation of CCR9 expressed by iNKT cells might mediate an enhancement of iNKT cell-mediated cytotoxicity. Interestingly, iNKT cells through constitutive expression of CCR2 and CCR9 appear to be poised for migration to gut, infected lung, and chronically inflamed lung and liver, suggesting that this subset has important functions to perform at these sites.

Migrational potential of dNKT cells

In contrast, we observed that dNKT cells specifically over-expressed integrin α4 (paper II, figure 2). Integrin α4 can, by pairing with different β-chains, be involved in different migration-schemes. α4β7 is a receptor for MAdCAM-1, which is expressed on the intestinal endothelium and is important for the entry of T cells into the lamina propria. In a ulcerative colitis model, dNKT cells increase in the lamina propria of the gut, though due to migration or proliferation is unknown (Fuss et al., 2004). One could speculate that this increase in dNKT cells involves α4β7-mediated migration. Additionally, α4β1/VLA-4 is required for cell adhesion to bone marrow vessels. Human $CD56^+$ $CD3^+$ NKT-like cells were shown to home to bone marrow in a VLA-

4-dependent manner (Franitza et al., 2004), thus suggesting a mechanism for entry of dNKT cells into bone marrow.

Potential function of NKT cells

We show that, among the NKT cell over-expressed genes, were eight genes involved in cytotox, including cathepsin W, CRACC (Riken gene 4930560D03), FasL, granzyme A, Pgrp, and Pta1 (paper I, figure S1). Though CRACC, a 2B4-related receptor involved in inducing NK cell cytotoxicity (Bouchon et al., 2001; Stark and Watzl, 2006), FasL, and Pta1, an adhesion molecule known to enhance cytotoxicity, are among the NKT cell over-expressed genes, they were expressed at two- to three-fold higher levels in iNKT cells compared to dNKT cells. This might suggest that iNKT cells have a more potent cytotoxic ability than dNKT cells. We also showed that NKT cells constitutively over-expressed IFN-γ, which enhances cytotoxic and inflammatory activities, and CCL5/RANTES, which promotes infiltration of cells to inflammatory sites.

Additionally, IFN-γ produced by NKT cells is known to rapidly induce NK cells to mediate cytotolysis of target cells. We observed that NKT cells over-expressed LIGHT, a member of the TNF ligand family, at approximately ten-fold higher levels compared to $CD4^+$ T cells. LIGHT is known to bind LTβR, which is part of the LT signaling pathway crucial for development of iNKT cells, we hypothesize that LIGHT could play a role in development of dNKT as well as for iNKT cells. In addition, a recent publication has shown that LIGHT is a critical ligand for the activation of NK cells (Fan et al., 2006) and as NKT cell-mediated rejection of certain tumors is dependent on NK cells, we propose that LIGHT expressed by NKT cells may be a crucial factor for this NKT cell mediated, NK cell dependent rejection of tumors. Thus, NKT cells appear to be predetermined for inflammatory and cytotoxic actions.

Another characteristic trait of NKT cells is the simultaneous production of IFN-γ and IL-4 upon activation. While dNKT cells typically produce lower amounts of IL-4, iNKT cells produce high amounts of IL-4 upon activation, reminiscent of the $CD4^+$

Th2 cytokine profile. IL-4 is indeed over-expressed by iNKT cells together with the Th2 cell-characteristic genes IL-2Rα and CCR2 (Yamaguchi et al., 2005). Thus, it would appear that the enhanced cytoxic potential of iNKT cells comes in addition with enhanced potential to stimulate Th2-associated immune responses, possibly acting as help for B cells during infections, enhancing the anti-pathogenic Ig responses.

CONCLUDING REMARKS TO PAPERS I AND II

This study fulfilled our expectations, as NKT cells did over-express a number of genes distinct from those over-expressed by $CD4^+$ T cells, and among these genes were several novel genes not previously associated with NKT cell development or function.

We propose that the list of genes over-expressed by NKT cells compared to $CD4^+$ T cells, comprise a specific NKT cell gene expression signature. Our results suggested that NKT cells were predetermined for inflammatory and cytotoxic actions, while sharing many similarities with NK cells in activation and function. Both NKT cell subsets expressed chemokine and integrin genes associated with migration into inflamed tissue as well as to specialized locations such as gut and lung. In addition, we showed that both NKT cell subsets expressed LIGHT, which potentially confers a novel way for NKT cells to induce NK cell mediated cytolysis of target cells. NKT cells were also demonstrated to specifically over-express several transcription factors, among them Aiolos, Id2, and eomesodermin, whos´ putative roles in NKT cell biology would be interesting to examine further.

We also identified two different gene sets uniquely over-expressed by the dNKT and iNKT cell subsets, supporting the existence of unique NKT cell subset functional programs. dNKT and iNKT cells express distinct sets of activating and inhibitory NK receptors, indicating that the subsets can be differentially activated. Particularly CRACCs role in NKT cell cytotoxicity would be interesting to determine. In addition, dNKT cells appear to be firmly associated with Th1-type reactions while iNKT cells appear to have an enhanced cytoxic potential together with an enhanced potential to

stimulate Th2-associated immune responses compared to dNKT cells. In the future it would be interesting to identify genes that imprint the different functional programs in the NKT cell subsets and to examine to what extent the different subsets are activated by non-TCR stimuli. It would also be interesting to determine novel ways for NKT cells to activate NK cells. We expect that several additional finds will emerge when we analyze our stimulated microarrays.

In addition to providing a novel insight into which molecules may be determining NKT cell development, activation and function, the gene expression signatures specific for the NKT cells, dNKT and iNKT cell subsets offer information as how to best manipulate the NKT cell population as a whole as well as the individual subsets during various diseases and infections.

INTRODUCTION TO PAPER III

When this project was initiated, little was known of the fate of NKT cells during a *Salmonella* infection or what potential importance this cell population could have in the ensuing immune response. Previous studies had given a non-conclusive and somewhat puzzling picture. Intra-peritoneal (i.p.) administration of *Salmonella,* induced $J\alpha18^{-/-}$ mice to express increased levels of IL-12 compared to control mice, implying that the presence of iNKT cells inhibited production of IL-12. Additionally, peritoneal $NK1.1^{+}$ $\alpha\beta$T cells expressed mRNA for IFN-γ but also for IL-4, which spawned the idea that IL-4 might mediate this inhibition. The idea was strengthened when transfer of $NK1.1^{+}$ $\alpha\beta$T cells into $Ja18^{-/-}$ mice led to reduced IL-12 levels, and blocking with IL-4-mAbs induced a five-fold decrease in bacterial load of the peritoneum (Naiki et al., 1999). In the same system, infection did not affect IL-4 or IFN-γ mRNA levels in hepatic $NK1.1^{+}$ $\alpha\beta$T cells, though these cells induced FasL-mediated liver damage. $J\alpha18^{-/-}$ mice had reduced liver injury but no change in bacterial numbers compared to control mice (Ishigami et al., 1999) (Shimizu et al., 2002). A final study showed that oral infection with *Salmonella* led to a decrease in splenic $NK1.1^{+}$ $\alpha\beta$T cell numbers, and induced these cells to produce IFN-γ and TNF-α (Kirby et al., 2002). In summary, *Salmonella* infection appears to induce NKT cells to produce pro-inflammatory IFN-γ and TNF-α, anti-inflammatory IL-4, and mediate liver damage and despite $J\alpha18^{-/-}$ mice having increased IL-12 levels this did not reduce bacterial presence in liver. Thus, the existing data was inconclusive as to the function of NKT cells in *Salmonella* infection, when we stepped onto the arena.

Several additional observations in other systems, suggested that NKT cells had the potential to be an important player in *Salmonella* immunity. Firstly, hepatic $NK1.1^{+}$ $\alpha\beta$T cells have been shown to constitutively express TLR2, TLR4, and TLR5 mRNA. TLR2 and TLR4 bind LPS and lipoproteins while TLR5 binds flagellin (Shimizu et al., 2002). As all three structures are expressed by *Salmonella* this could potentially allow NKT cells to be directly activated by the bacteria in a CD1d-independent manner. Secondly, as described previously in this thesis, the capacity of macrophages to kill

phagocytosed *Salmonella* is crucial for host survival. If macrophages are insufficiently activated, *Salmonella* can manipulate them into becoming a hiding place from the immune system. As IFN-γ is a potent activator of macrophages and NKT cells are early producers of IFN-γ (Kawano et al., 1997), NKT cells might constitute one of the early sources of this important cytokine. Additionally, activated NKT cells are known to enhance IFN-γ production by NK cells, an additional potential source of early IFN-γ (Carnaud et al., 1999). Thirdly, another phagocyte known to be crucial for limiting *Salmonella* spread is the neutrophil (Vassiloyanakopoulos et al., 1998). NKT cells have been shown to induce recruitment of neutrophils into infected tissues in *P. aeruginosa* and *S. pneumoniae* lung infection models (Nieuwenhuis et al., 2002) (Kawakami et al., 2003) and could potentially have the same role in *Salmonella* infection. Fourthly, pathogens are known to employ MHC-avoidance mechanisms (Slobedman et al., 2002) but as DCs and macrophages constitutively express CD1d, this enables these APCs to present bacterial antigens to NKT cells even if they are unable to present antigen to conventional MHC-restricted T cells. The above related information supported the concept of NKT cells having an important role in *Salmonella* immunity and led to the initiation of this study. Thus, the aim of this study was to determine the role of NKT cells in the immune response to a *Salmonella* infection.

CHOICE OF METHOD FOR PAPER III

The infection route is known to influence what immune responses are generated against an invading pathogen. *Salmonella* bacteria gain access to the natural invasion site, the gastrointestinal tract of the host, upon being present in contaminated food or water ingested by the host. Therefore, to mimic the natural infection route, bacteria were administered orally in this study. As we believed that NKT cells play an important part during the early phase of infection, we wished to get an early and synchronized infection of the mice. Thus, 10^9 bacteria of the virulent strain *Salmonella enterica* serotype *typhimurium* χ-4666 were administered orally. While this dose ensures that all mice become infected, the dose is lethal for the mice, with

fatality occurring at approximately day 7. Mice were examined one, two, three and five days post-infection, as to observe early and a late time points of infection. In addition to directly examining how NKT cells respond to the developing infection, we wished to gain an understanding of the role of NKT cells and the effect an absence of this population would have on the ensuing immune response. Thus $CD1^{-/-}$ mice were compared to $CD1^{+/-}$ and B6 mice. In order to observe iNKT cells directly, αGalCer-loaded CD1d-multimers were used, while dNKT cells had to be observed indirectly as being represented within the $NK1.1^{+}$ $TCR\beta^{+}$ population. MLN, spleen and liver of these mice were examined, as these organs are sequentially and preferentially colonized by *Salmonella* bacteria during infection and any effect of and on NKT cells were likely to be observed here. The effect of the presence of NKT cells was gauged by bacterial load, presence of additional immune populations and cytokine production.

RESULTS AND DISCUSSION OF PAPER III

NKT cells were activated by the Salmonella infection

To determine how NKT cells were affected by *Salmonella* infection, features known to be associated with activation were examined. Upregulation of CD69 and increase in cell size was apparent in both iNKT cells and NK cells at early stages of infection. We observed a reduction in $NK1.1^{+}$ αβT cell numbers in spleen, confirming a previous observation made in a *Salmonella* model (Kirby et al., 2002), but not in liver. Disappearance of $NK1.1^{+}$ αβT cells upon infection has been described in several pathogen models (Emoto et al., 1995) (Hobbs et al., 2001) (Kirby et al., 2002) and apoptosis has been suggested to be responsible for part of the activation-induced reduction in NKT cell presence (Eberl and MacDonald, 1998). However, $NK1.1^{+}$ αβT cells have been shown to down-modulate NK1.1 upon activation (Chen et al., 1997) so the observed decrease of $NK1.1^{+}$ αβT cells in our study could be caused by down-regulation of one of the defining markers, NK1.1 or TCR. We observed that iNKT cells, which do not rely on NK1.1 for identification, strongly down-modulated expression of NK1.1 but retained TCR levels during infection, supporting that some of the apparent decrease in $NK1.1^{+}$ αβT cell presence was due to down modulation of

NK1.1. The down-modulation of NK1.1 that we observed during infection with *Salmonella* was also observed by Wilson et al (Wilson et al., 2003). In the same paper, αGalCer-mediated activation *in vivo* and *in vitro* was shown to induce rapid down-modulation also of TCR. The artificial ligand αGalCer is known to be a very powerful agonist, and as no such reduction in surface TCR was observed in our study, this might suggest that iNKT cells were not as powerfully activated by *Salmonella* infection as they were by αGalCer and that during more physiological activation, as seen in our study, only NK1.1 is affected. An additional sign of activation is the production of cytokines. Oral *Salmonella* infection clearly induced iNKT and NK1.1$^+$ αβT cells in spleen and liver to produce IFN-γ but no IL-4 during the early stage of infection. NKT cells and NK cells were responsible for approximately 25% and 35%, respectively, of the total IFN-γ produced in spleen on day 3, while prior to day three very little IFN-γ was produced by any cell type in spleen.

CD1d expression was modulated by Salmonella bacteria

Thus, iNKT cells and NK1.1$^+$ αβT cells were clearly activated by the oral *Salmonella* infection. Next, another aspect that might be related to the activation of NKT cells was studied; the effect of *Salmonella* infection on CD1d expression. DCs are CD1d-expressing APCs known to potently induce NKT cells to produce IFN-γ upon presentation of ligand in the context of CD1d (Kitamura et al., 1999). Additionally, DCs are well known targets of *Salmonella* bacteria and DCs have been shown to up-regulate CD1d during inflammation (Krajina et al., 2003). DCs do not have to be infected themselves to be able to present bacterial epitopes as bystander DCs have been shown to present bacterial antigens acquired from infected macrophages that have gone into apoptosis(Yrlid and Wick, 2000). In this study, we showed that *in vitro* infection with *Salmonella* or stimulation with LPS, a component of the cell wall of *Salmonella*, induced a two- to three-fold up-regulation of CD1d levels on DCs. Subsequently, our results were confirmed in two other *in vitro* systems, which demonstrated that pathogens could induce up-regulation of CD1d levels on APCs. Infection with the intracellular parasite *Leishmania infantum* induced DCs to up-regulate CD1d, which rendered them susceptible to iNKT cell-mediated cytotoxicity

(Campos-Martin et al., 2006). Also a *mycobacterium in vitro* study showed that macrophages up-regulate CD1d levels upon receiving a microbial or inflammatory signal together with IFN-γ. These higher levels of CD1d were shown to induce augmented levels of proliferation and cytokine production by NKT cells *in vitro* and *in vivo* (Skold et al., 2005). Thus, increases in CD1d levels can induce more potent NKT cell activation *in vivo*. Therefore, we wished to determine whether CD1d levels could be observed to be up-regulated *in vivo* during infection with *Salmonella*. We examined CD1d levels at various time points during our *in vivo Salmonella* infection, but no general shift in CD1d levels was observed on either splenic or hepatic DCs. Thus, the upregulation of CD1d demonstrated *in vitro* appears not to occur universally on DCs during infection. We could speculate that only directly infected DCs or DCs present in a local inflammatory milieu upregulate CD1d, thereby making a general upregulation of CD1d on all DCs unlikely to be observed *in vivo*.

Interesting data has been published pointing to a unique mechanism of NKT cell activation during *Salmonella* infection. Rather than recognizing *Salmonella*-derived antigens in the context of CD1d, activation of NKT cells during *Salmonella* infection was dependent on weak recognition of a self ligand in combination with IL-12 produced by DCs (Brigl et al., 2003). This self-ligand was recently shown to be the lysosomal glycosphingolipid iGb3, which was presented by CD1d-expressing DCs, activated through TLR signalling (Mattner et al., 2005). Thus TCR-dependent but pathogen ligand-independent activation of NKT cells might be a general mechanism used during certain types of infections. This is supported by an infection model with the parasite *T. cruzi*. Though a role for endogenous ligands was not formally shown, the activation of NKT cells during infection was suggestively demonstrated to require a combination of IL-12 and TCR-CD1d interaction (Duthie et al., 2005a).

The effect of NKT cells on the presence of immune cells and bacterial load

Additionally, we were interested in the effect NKT cells have on other immune cell populations during the course of infection. Thus, the presence of macrophages, neutrophils, NK cells, B cells and T cells was examined in MLN, liver and spleen of

CD1$^{-/-}$ and control mice. While macrophages and neutrophils increased several-fold in frequency as well as in numbers in all studied organs. The NK cells, B cells and T cells generally decreased or remained unchanged in frequency during infection. These population dynamics induced by the ongoing infection were not observed to be affected by the absence of NKT cells. Though it has been previously shown that NKT cells have a role in promoting neutrophil migration into infected tissue, this was not observed in our system. We also determined whether the immune system's capacity to control infection, as measured by bacterial load, was influenced by the presence of NKT cells. No difference in number of colony forming units (CFU) was found in MLN, liver, and spleen of CD1$^{-/-}$ and control mice. These results were not surprising considering that this is a lethal infection model, with the immune system of the infected mice being unable to control or clear the infection, resulting in death at approximately day seven post-inoculation. Any effect the loss of NKT cells would have on bacterial numbers would probably not be noticeable in the face of such overwhelming bacterial presence. The lack of NKT cells might have an observable effect on bacterial numbers or immune cell populations at the very earliest time points after inoculation, after hours rather than days. Additionally, the IFN-γ produced by NKT cells upon infection might have an important function in other tissues than those examined in this study, like locally in gut. We showed that CCR9 is expressed on a subset of iNKT cells, while dNKT cells over-expressed integrin α4, which in the form of α4β7, is important for T cell entry into the lamina propria (paper II). Thus, NKT cells appear to have the capacity to enter gut tissue to perform effector function there. To further elucidate the role of NKT cells during *Salmonella* infection, additional *in vivo* models should be employed. An oral infection model using a less virulent *Salmonella* strain resulting in an infection that could be controlled and cleared by the immune system would be useful for testing our hypotheses.

The infection skews the cytokine production repertoire of NKT cells

Finally, it is well known that NKT cells upon activation produce substantial amounts of IL-4 (Kronenberg, 2005) and NKT cells have been suggested to produce IL-4 in an i.p. *Salmonella* model. In contrast, we showed that NKT cells produced significant

amounts of IFN-γ but no IL-4 during the early stage of infection. We hypothesized that the inflammatory milieu caused by the infection, such as exposure of IL-12, induced NKT cells to skew their cytokine production repertoire toward a protective IFN-γ phenotype. To test this, we re-stimulated iNKT and NK1.1^{+} αβT cells from CD1$^{-/-}$ and CD1$^{+/-}$ mice with PMA and ionomycin to see if activation in a non-inflammatory environment would reverse the polarised cytokine profile. NK1.1^{+} αβT from infected CD1$^{+/-}$ mice produced more IFN-γ and less or no IL-4 upon *in vitro* stimulation, showing that the polarise cytokine profile was stable. The infection-induced IFN-γ-dominated profile is dependent on CD1d-restricted NK1.1^{+} αβT cells, as shown by the cytokine production of NK1.1^{+} αβT cells from CD1$^{-/-}$ mice being unchanged by ongoing infection. In contrast to NKT cells, IFN-γ production by NK cells was independent on CD1d. *In vitro* stimulated iNKT cells exhibited a similar cytokine profile, with a complete loss of IL-4 and a maintained ability to produce IFN-γ. This indicates that the increase in % of IFN-γ producing cells among NK1.1^{+} αβT cells were not iNKT but rather dNKT cells. So for the first time, dNKT cells have been shown to be activated during a *Salmonella* infection. Separate roles for iNKT and dNKT cells have been observed in other infection systems. Recently, infection with *T. cruzi* demonstrated that dNKT cells induced a detrimental inflammatory response with increased levels of IFN-γ, TNF-α and nitric oxide (NO), while the presence of iNKT cells dampened inflammation, possibly by regulating the pro-inflammatory dNKT cells (Duthie et al., 2005b). This underlines the importance of further study of the distinct function of the dNKT and iNKT cell subsets during *Salmonella* infection.

CONCLUDING REMARKS TO PAPER III

NKT cells are fascinating in their clear divergence from conventional αβT cells. In paper I we discussed several putative functional differences between these two cell types, concluding that NKT cells over-expressed genes that predetermined them for inflammatory action. Here in paper III, we have shown how conventional αβT and NKT cells differ in activation and function during infection with *Salmonella*. The capacity of NKT cells to rapidly produce large amounts of cytokines is suggested to be important for early activation and skewing of subsequently developing immune reactions. Thus, the early production of IFN-γ by NKT cells might be important for the development of protective immune responses to *Salmonella* infection, potentially by enhancing the cytotoxic actions of macrophages and neutrophils and enhancing NK cell activity. Further studies should illuminate the effect NKT cells have on other immune cell populations involved in immune responses to *Salmonella*. Additionally, in view of the NKT cells apparent capacity to home to the intestine and mediate inflammatory actions there, it would be interesting to examine NKT cells in gut during *Salmonella* infection.

ACKNOWLEDGMENTS

I would like to express my sincere gratitude to my supervisor, *Susanna L Cardell*, for accepting me as a graduate student and sharing your energy and your infectious love of science with me. In addition to providing a creative and intellectually stimulating working environment, you have also taken the time to offer encouragement and guidance, which is something that I greatly appreciate.

Martin and *Julia*, fellow students in the illustrious SC-group, I would like to thank you for many things; your practical and intellectual help over the years, your great attitude to life, our numerous non-scientific conversations and for the general good fun that you have spread around.

A very heartfelt THANK YOU to all my past and present friends at the Immunology section. I consider myself very lucky to have had the privilege to work (and play) with so many humorous, bright, and agreeable colleagues over the years.

I also wish to express my deep affection for all my wonderful civilian friends.
Ingen nämnd men ingen glömd.

I've been blessed with a warm-hearted and fun-filled extended family. I'm truly thankful to be genetically and/or emotionally related to you all: *Stina, Eva, Richard, Johan, Hanna,* and *Monica*.

For all those who are no longer with us, an extra thought to all the angels in heaven.

And for the two most important people in my world, *Mamma* and *Anna*, I love you beyond measure.

POPULÄRVETENSKAPLIG SAMMANFATTNING

Parallellt med människans utveckling från encellig organism till den komplexa multicellulära varelse som vi är idag, har även immunförsvarets förmåga att skydda oss mot omvärldens faror förbättrats och förstärkts. Immunförsvaret, vars syfte är att skydda oss mot sjukdomsalstrande organismer (patogener) och skadliga förändringar i våra kroppar, är en förutsättning för vår överlevnad. Immunförsvaret är uppbyggt av mekaniska barriärer som hud och slemhinnor, men även av en mängd olika typer av immunceller och skyddande proteiner. För att kunna uppnå sitt syfte måste immuncellerna kunna reagera på närvaron av patogener och skadade eller förändrade kroppsceller. Därför har immunceller receptorer på sin yta som antingen direkt känner igen strukturer på patogener eller binder in till immunologiska substanser som signalerar stress eller fara. Två generella typer av immunförsvar existerar; det långsammare ”specifika” där immuncellerna har förmågan att förändra sina receptorer för att anpassa sig till den pågående infektionen och skapa det mest effektiva försvar mot just denna patogen, samt det ”medfödda” där immuncellerna direkt känner igen unika patogenstrukturer och reagerar mycket snabbt och kraftfullt.

Syftet med min avhandling är att utforska vilken funktionell roll naturliga mördar T (NKT) -celler har, samt vilka gener som är viktiga för dessa celler. NKT-celler utgör en liten men specialiserad undergrupp av T-celler, och är mycket intressanta eftersom att de, trots att de tillhör det specifika immunförsvaret, även har receptorer och egenskaper som är starkt förknippade med det medfödda immunförsvaret. Dessa ger NKT-cellerna förmågan att mycket snabbt producera stora mängder signalsubstanser vilken tros vara viktig för att forma efterföljande immunreaktioner så att dessa utvecklas på ett, för värden, optimalt sätt. En annan ovanlig egenskap är NKT-cellens förmåga att känna igen kroppsegna strukturer. Medan vanliga självreaktiva T-celler inte tillåts att utvecklas eftersom dessa kan orsaka autoimmuna sjukdomar tycks självreaktiva NKT-celler snarare skydda mot uppkomsten av autoimmuna sjukdomar. I motsats till vanliga T-celler som enbart känner igen proteinstrukturer, känner NKT-celler igen strukturer uppbyggda av socker och fett. Detta är fördelaktigt då många

patogener omger sig med skyddande höljen bestående av just socker och fett, vilket kan leda till en snabb aktivering av NKT-celler vid infektioner.

Trots att NKT-celler har undersökts i snart tjugo år, så finns det fortfarande ett stort behov av att fördjupa våra kunskaper om denna fascinerande celltyp. I syfte att identifiera nya receptorer och signalmolekyler som är viktiga för NKT-cellers funktion definierade vi en NKT-cellspecifik genprofil genom att göra fullständiga genanalyser på två undergrupper av NKT-celler i jämförelse med vanliga T-celler (artikel I). Genprofilen indikerar att NKT celler har främst inflammatoriska effekter och har kapaciteten att direkt döda skadade eller sjuka celler i kroppen, samt verkar utföra sina funktioner ute i kroppens vävnader snarare än i lymfsystemet. Denna genprofil ska användas för att vidare undersöka vilka signaleringsvägar, migrationsmönster och funktioner som är avgörande för NKT-cellers roll i immunförsvaret.

NKT-celler har visats ha viktiga men mycket olika roller i flertalet immunreaktioner mot cancer, autoimmuna sjukdomar, virus och bakterier. Hur samma cellpopulation kan ha så många olika roller är ännu inte känt men NKT-celler har visats bestå av flera undergrupper vilket kan vara del av förklaringen. Under de senaste åren har olika undergrupper observerats utföra skilda funktioner men vilka receptorer och proteiner som medför denna skillnad i funktion är bara delvis känt. Därför, i samband med att fullständiga genanalyser gjordes på de två olika NKT-cellsundergrupperna, definierades även de genprofiler som var unika för dessa undergrupper (artikel II) i syfte att öka kunskapen om funktionella skillnader mellan undergrupperna. Genprofilerna indikerar att den ena undergruppen hade en ökad kapacitet att döda omgivande celler samt utsöndra reglerande signalsubstanser medan den andra hade mer uttalade inflammatoriska drag.

I sista projektet undersöktes NKT-cellernas roll i en infektionsmodell. Immunsvaren som genereras vid en Salmonella-infektion är generellt väl studerade. Trots detta är NKT-cellernas roll mycket otydligt definierad så vi valde att undersöka vilken effekt NKT-celler hade på immunsvaret mot en Salmonella-infektion. Intressant nog fann vi att infektionen påverkade sammansättningen av de signalsubstanser som utsöndrades

av NKT-cellerna. Vi visade att NKT-cellerna aktiverades kraftfullt under ett tidigt stadium av infektionen var på de snabbt producerade den typ av signalsubstanser som är viktiga för att framgångsrikt bekämpa Salmonella-infektioner. Infektionsmodellen som användes var dödlig och därför var det inte oväntat att trots den starka aktiveringen av NKT-celler så kunde ingen tydlig påverkan på bakterienivåer eller närvaron av övriga immunceller observeras (artikel III). Ytterligare undersökningar behövs för att vidare karaktärisera NKT-cellernas roll vid Salmonella-infektioner.

Immunförsvaret är imponerande i sin komplexitet vilket gör det mycket svårt att förutse och förstå vilka immunkomponenter som är viktiga i den mångfald av sjukdomar som finns i vår vardag. I en tid då mycket fokus läggs på forskning kopplat till direkt applicerbarhet på kliniken blir det extra vikigt att bibehålla kvaliteten på vår grundforskning. Grundforskning med syfte att kompromisslöst öka kunskapen om grundläggande cellulära och molekylära immunologiska interaktioner utgör förutsättningen för att i framtiden kunna skapa innovativa och effektiva behandlingar. Vårt mål med denna studie är därför att bidra med ytterligare detaljkunskaper om NKT-celler som i framtiden kan bidra till att vi på ett bättre sätt kan kontrollera och styra vårt immunförsvar vid sjukdomar och skador.

REFERENCES

Amprey, J. L., Im, J. S., Turco, S. J., Murray, H. W., Illarionov, P. A., Besra, G. S., Porcelli, S. A. and Spath, G. F. (2004). A subset of liver NK T cells is activated during Leishmania donovani infection by CD1d-bound lipophosphoglycan. *J Exp Med* **200**, 895-904.

Arase, H., Arase, N., Kobayashi, Y., Nishimura, Y., Yonehara, S. and Onoe, K. (1994). Cytotoxicity of fresh NK1.1+ T cell receptor alpha/beta+ thymocytes against a CD4+8+ thymocyte population associated with intact Fas antigen expression on the target. *J Exp Med* **180**, 423-32.

Arase, H., Arase, N., Nakagawa, K., Good, R. A. and Onoe, K. (1993). NK1.1+ CD4+ CD8- thymocytes with specific lymphokine secretion. *Eur J Immunol* **23**, 307-10.

Arase, H., Arase, N., Ogasawara, K., Good, R. A. and Onoe, K. (1992). An NK1.1+ CD4+8- single-positive thymocyte subpopulation that expresses a highly skewed T-cell antigen receptor V beta family. *Proc Natl Acad Sci U S A* **89**, 6506-10.

Arase, H., Arase, N. and Saito, T. (1996). Interferon gamma production by natural killer (NK) cells and NK1.1+ T cells upon NKR-P1 cross-linking. *J Exp Med* **183**, 2391-6.

Arase, N., Arase, H., Park, S. Y., Ohno, H., Ra, C. and Saito, T. (1997). Association with FcRgamma is essential for activation signal through NKR-P1 (CD161) in natural killer (NK) cells and NK1.1+ T cells. *J Exp Med* **186**, 1957-63.

Arrunategui-Correa, V., Lenz, L. and Kim, H. S. (2004). CD1d-independent regulation of NKT cell migration and cytokine production upon Listeria monocytogenes infection. *Cell Immunol* **232**, 38-48.

Askenase, P. W., Itakura, A., Leite-de-Moraes, M. C., Lisbonne, M., Roongapinun, S., Goldstein, D. R. and Szczepanik, M. (2005). TLR-dependent IL-4 production by invariant Valpha14+Jalpha18+ NKT cells to initiate contact sensitivity in vivo. *J Immunol* **175**, 6390-401.

Askenase, P. W., Szczepanik, M., Itakura, A., Kiener, C. and Campos, R. A. (2004). Extravascular T-cell recruitment requires initiation begun by Valpha14+ NKT cells and B-1 B cells. *Trends Immunol* **25**, 441-9.

Attanavanich, K. and Kearney, J. F. (2004). Marginal zone, but not follicular B cells, are potent activators of naive CD4 T cells. *J Immunol* **172**, 803-11.

Azuma, T., Takahashi, T., Kunisato, A., Kitamura, T. and Hirai, H. (2003). Human CD4+ CD25+ regulatory T cells suppress NKT cell functions. *Cancer Res* **63**, 4516-20.

Backstrom, E., Kristensson, K. and Ljunggren, H. G. (2004). Activation of natural killer cells: underlying molecular mechanisms revealed. *Scand J Immunol* **60**, 14-22.

Baron, J. L., Gardiner, L., Nishimura, S., Shinkai, K., Locksley, R. and Ganem, D. (2002). Activation of a nonclassical NKT cell subset in a transgenic mouse model of hepatitis B virus infection. *Immunity* **16**, 583-94.

Baumgarth, N., Tung, J. W. and Herzenberg, L. A. (2005). Inherent specificities in natural antibodies: a key to immune defense against pathogen invasion. *Springer Semin Immunopathol* **26**, 347-62.

Baxevanis, C. N., Gritzapis, A. D. and Papamichail, M. (2003). In vivo antitumor activity of NKT cells activated by the combination of IL-12 and IL-18. *J Immunol* **171**, 2953-9.

Beaudoin, L., Laloux, V., Novak, J., Lucas, B. and Lehuen, A. (2002). NKT cells inhibit the onset of diabetes by impairing the development of pathogenic T cells specific for pancreatic beta cells. *Immunity* **17**, 725-36.

Behar, S. M., Podrebarac, T. A., Roy, C. J., Wang, C. R. and Brenner, M. B. (1999). Diverse TCRs recognize murine CD1. *J Immunol* **162**, 161-7.

Belperron, A. A., Dailey, C. M. and Bockenstedt, L. K. (2005). Infection-induced marginal zone B cell production of Borrelia hermsii-specific antibody is impaired in the absence of CD1d. *J Immunol* **174**, 5681-6.

Bendelac, A. (1995). Positive selection of mouse NK1+ T cells by CD1-expressing cortical thymocytes. *J Exp Med* **182**, 2091-6.

Bendelac, A., Bonneville, M. and Kearney, J. F. (2001). Autoreactivity by design: innate B and T lymphocytes. *Nat Rev Immunol* **1**, 177-86.

Bendelac, A., Hunziker, R. D. and Lantz, O. (1996). Increased interleukin 4 and immunoglobulin E production in transgenic mice overexpressing NK1 T cells. *J Exp Med* **184**, 1285-93.

Bendelac, A., Killeen, N., Littman, D. R. and Schwartz, R. H. (1994). A subset of CD4+ thymocytes selected by MHC class I molecules. *Science* **263**, 1774-8.

Bendelac, A., Lantz, O., Quimby, M. E., Yewdell, J. W., Bennink, J. R. and Brutkiewicz, R. R. (1995). CD1 recognition by mouse NK1+ T lymphocytes. *Science* **268**, 863-5.

Benlagha, K., Kyin, T., Beavis, A., Teyton, L. and Bendelac, A. (2002). A thymic precursor to the NK T cell lineage. *Science* **296**, 553-5.

Benlagha, K., Wei, D. G., Veiga, J., Teyton, L. and Bendelac, A. (2005). Characterization of the early stages of thymic NKT cell development. *J Exp Med* **202**, 485-92.

Benlagha, K., Weiss, A., Beavis, A., Teyton, L. and Bendelac, A. (2000). In vivo identification of glycolipid antigen-specific T cells using fluorescent CD1d tetramers. *J Exp Med* **191**, 1895-903.

Bezbradica, J. S., Stanic, A. K., Matsuki, N., Bour-Jordan, H., Bluestone, J. A., Thomas, J. W., Unutmaz, D., Van Kaer, L. and Joyce, S. (2005). Distinct roles of dendritic cells and B cells in Va14Ja18 natural T cell activation in vivo. *J Immunol* **174**, 4696-705.

Born, W. K., Reardon, C. L. and O'Brien, R. L. (2006). The function of gammadelta T cells in innate immunity. *Curr Opin Immunol* **18**, 31-8.

Borowski, C. and Bendelac, A. (2005). Signaling for NKT cell development: the SAP-FynT connection. *J Exp Med* **201**, 833-6.

Bouchon, A., Cella, M., Grierson, H. L., Cohen, J. I. and Colonna, M. (2001). Activation of NK cell-mediated cytotoxicity by a SAP-independent receptor of the CD2 family. *J Immunol* **167**, 5517-21.

Brandes, M., Willimann, K. and Moser, B. (2005). Professional antigen-presentation function by human gammadelta T Cells. *Science* **309**, 264-8.

Brigl, M. and Brenner, M. B. (2004). CD1: antigen presentation and T cell function. *Annu Rev Immunol* **22**, 817-90.

Brigl, M., Bry, L., Kent, S. C., Gumperz, J. E. and Brenner, M. B. (2003). Mechanism of CD1d-restricted natural killer T cell activation during microbial infection. *Nat Immunol* **4**, 1230-7.

Brossay, L., Chioda, M., Burdin, N., Koezuka, Y., Casorati, G., Dellabona, P. and Kronenberg, M. (1998a). CD1d-mediated recognition of an alpha-galactosylceramide by natural killer T cells is highly conserved through mammalian evolution. *J Exp Med* **188**, 1521-8.

Brossay, L., Tangri, S., Bix, M., Cardell, S., Locksley, R. and Kronenberg, M. (1998b). Mouse CD1-autoreactive T cells have diverse patterns of reactivity to CD1+ targets. *J Immunol* **160**, 3681-8.

Budd, R. C., Miescher, G. C., Howe, R. C., Lees, R. K., Bron, C. and MacDonald, H. R. (1987). Developmentally regulated expression of T cell receptor beta chain variable domains in immature thymocytes. *J Exp Med* **166**, 577-82.

Calabi, F. and Milstein, C. (2000). The molecular biology of CD1. *Semin Immunol* **12**, 503-9.

Campbell, D. J. and Butcher, E. C. (2002). Rapid acquisition of tissue-specific homing phenotypes by CD4(+) T cells activated in cutaneous or mucosal lymphoid tissues. *J Exp Med* **195**, 135-41.

Campos-Martin, Y., Colmenares, M., Gozalbo-Lopez, B., Lopez-Nunez, M., Savage, P. B. and Martinez-Naves, E. (2006). Immature human dendritic cells infected with Leishmania infantum are resistant to NK-mediated cytolysis but are efficiently recognized by NKT cells. *J Immunol* **176**, 6172-9.

Campos, R. A., Szczepanik, M., Itakura, A., Akahira-Azuma, M., Sidobre, S., Kronenberg, M. and Askenase, P. W. (2003). Cutaneous immunization rapidly activates liver invariant Valpha14 NKT cells stimulating B-1 B cells to initiate T cell recruitment for elicitation of contact sensitivity. *J Exp Med* **198**, 1785-96.

Capone, M., Hockett, R. D., Jr. and Zlotnik, A. (1998). Kinetics of T cell receptor beta, gamma, and delta rearrangements during adult thymic development: T cell receptor rearrangements are present in CD44(+)CD25(+) Pro-T thymocytes. *Proc Natl Acad Sci U S A* **95**, 12522-7.

Cardell, S., Tangri, S., Chan, S., Kronenberg, M., Benoist, C. and Mathis, D. (1995). CD1-restricted CD4+ T cells in major histocompatibility complex class II-deficient mice. *J Exp Med* **182**, 993-1004.

Carnaud, C., Lee, D., Donnars, O., Park, S. H., Beavis, A., Koezuka, Y. and Bendelac, A. (1999). Cutting edge: Cross-talk between cells of the innate immune system: NKT cells rapidly activate NK cells. *J Immunol* **163**, 4647-50.

Carson, W. E., Giri, J. G., Lindemann, M. J., Linett, M. L., Ahdieh, M., Paxton, R., Anderson, D., Eisenmann, J., Grabstein, K. and Caligiuri, M. A. (1994). Interleukin (IL) 15 is a novel cytokine that activates human natural killer cells via components of the IL-2 receptor. *J Exp Med* **180**, 1395-403.

Carson, W. E., Ross, M. E., Baiocchi, R. A., Marien, M. J., Boiani, N., Grabstein, K. and Caligiuri, M. A. (1995). Endogenous production of interleukin 15 by activated human monocytes is critical for optimal production of interferon-gamma by natural killer cells in vitro. *J Clin Invest* **96**, 2578-82.

Castano, A. R., Tangri, S., Miller, J. E., Holcombe, H. R., Jackson, M. R., Huse, W. D., Kronenberg, M. and Peterson, P. A. (1995). Peptide binding and presentation by mouse CD1. *Science* **269**, 223-6.

Ceredig, R., Lynch, F. and Newman, P. (1987). Phenotypic properties, interleukin 2 production, and developmental origin of a "mature" subpopulation of Lyt-2- L3T4- mouse thymocytes. *Proc Natl Acad Sci U S A* **84**, 8578-82.

Chen, H., Huang, H. and Paul, W. E. (1997). NK1.1+ CD4+ T cells lose NK1.1 expression upon in vitro activation. *J Immunol* **158**, 5112-9.

Chen, Y. G., Choisy-Rossi, C. M., Holl, T. M., Chapman, H. D., Besra, G. S., Porcelli, S. A., Shaffer, D. J., Roopenian, D., Wilson, S. B. and Serreze, D. V. (2005). Activated NKT cells inhibit autoimmune diabetes through tolerogenic recruitment of dendritic cells to pancreatic lymph nodes. *J Immunol* **174**, 1196-204.

Cheroutre, H. (2005). IELs: enforcing law and order in the court of the intestinal epithelium. *Immunol Rev* **206**, 114-31.

Chiu, Y. H., Jayawardena, J., Weiss, A., Lee, D., Park, S. H., Dautry-Varsat, A. and Bendelac, A. (1999). Distinct subsets of CD1d-restricted T cells recognize self-antigens loaded in different cellular compartments. *J Exp Med* **189**, 103-10.

Coles, M. C. and Raulet, D. H. (1994). Class I dependence of the development of CD4+ CD8- NK1.1+ thymocytes. *J Exp Med* **180**, 395-9.

Coles, M. C. and Raulet, D. H. (2000). NK1.1+ T cells in the liver arise in the thymus and are selected by interactions with class I molecules on CD4+CD8+ cells. *J Immunol* **164**, 2412-8.

Cooper, M. A., Fehniger, T. A. and Caligiuri, M. A. (2001). The biology of human natural killer-cell subsets. *Trends Immunol* **22**, 633-40.

Cui, J., Shin, T., Kawano, T., Sato, H., Kondo, E., Toura, I., Kaneko, Y., Koseki, H., Kanno, M. and Taniguchi, M. (1997). Requirement for Valpha14 NKT cells in IL-12-mediated rejection of tumors. *Science* **278**, 1623-6.

Demoulins, T., Gachelin, G., Bequet, D. and Dormont, D. (2003). A biased Valpha24+ T-cell repertoire leads to circulating NKT-cell defects in a multiple sclerosis patient at the onset of his disease. *Immunol Lett* **90**, 223-8.

Di Santo, J. P. (2006). Natural killer cell developmental pathways: a question of balance. *Annu Rev Immunol* **24**, 257-86.

Dimasi, N. and Biassoni, R. (2005). Structural and functional aspects of the Ly49 natural killer cell receptors. *Immunol Cell Biol* **83**, 1-8.

Duarte, N., Stenstrom, M., Campino, S., Bergman, M. L., Lundholm, M., Holmberg, D. and Cardell, S. L. (2004). Prevention of diabetes in nonobese diabetic mice mediated by CD1d-restricted nonclassical NKT cells. *J Immunol* **173**, 3112-8.

Durante-Mangoni, E., Wang, R., Shaulov, A., He, Q., Nasser, I., Afdhal, N., Koziel, M. J. and Exley, M. A. (2004). Hepatic CD1d expression in hepatitis C virus infection and recognition by resident proinflammatory CD1d-reactive T cells. *J Immunol* **173**, 2159-66.

Duthie, M. S., Kahn, M., White, M., Kapur, R. P. and Kahn, S. J. (2005a). Both CD1d antigen presentation and interleukin-12 are required to activate natural killer T cells during Trypanosoma cruzi infection. *Infect Immun* **73**, 1890-4.

Duthie, M. S., Kahn, M., White, M., Kapur, R. P. and Kahn, S. J. (2005b). Critical proinflammatory and anti-inflammatory functions of different subsets of CD1d-restricted natural killer T cells during Trypanosoma cruzi infection. *Infect Immun* **73**, 181-92.

Eberl, G., Fehling, H. J., von Boehmer, H. and MacDonald, H. R. (1999a). Absolute requirement for the pre-T cell receptor alpha chain during NK1.1+ TCRalphabeta cell development. *Eur J Immunol* **29**, 1966-71.

Eberl, G., Lees, R., Smiley, S. T., Taniguchi, M., Grusby, M. J. and MacDonald, H. R. (1999b). Tissue-specific segregation of CD1d-dependent and CD1d-independent NK T cells. *J Immunol* **162**, 6410-9.

Eberl, G. and MacDonald, H. R. (1998). Rapid death and regeneration of NKT cells in anti-CD3epsilon- or IL-12-treated mice: a major role for bone marrow in NKT cell homeostasis. *Immunity* **9**, 345-53.

Eberl, G. and MacDonald, H. R. (2000). Selective induction of NK cell proliferation and cytotoxicity by activated NKT cells. *Eur J Immunol* **30**, 985-92.

Eckmann, L. and Kagnoff, M. F. (2001). Cytokines in host defense against Salmonella. *Microbes Infect* **3**, 1191-200.

Egawa, T., Eberl, G., Taniuchi, I., Benlagha, K., Geissmann, F., Hennighausen, L., Bendelac, A. and Littman, D. R. (2005). Genetic evidence supporting selection of the Valpha14i NKT cell lineage from double-positive thymocyte precursors. *Immunity* **22**, 705-16.

Eksteen, B., Grant, A. J., Miles, A., Curbishley, S. M., Lalor, P. F., Hubscher, S. G., Briskin, M., Salmon, M. and Adams, D. H. (2004). Hepatic endothelial CCL25 mediates the recruitment of CCR9+ gut-homing lymphocytes to the liver in primary sclerosing cholangitis. *J Exp Med* **200**, 1511-7.

Emoto, M., Emoto, Y. and Kaufmann, S. H. (1995). Interleukin-4-producing CD4+ NK1.1+ TCR alpha/beta intermediate liver lymphocytes are down-regulated by Listeria monocytogenes. *Eur J Immunol* **25**, 3321-5.

Exley, M., Garcia, J., Balk, S. P. and Porcelli, S. (1997). Requirements for CD1d recognition by human invariant Valpha24+ CD4-CD8- T cells. *J Exp Med* **186**, 109-20.

Exley, M., Garcia, J., Wilson, S. B., Spada, F., Gerdes, D., Tahir, S. M., Patton, K. T., Blumberg, R. S., Porcelli, S., Chott, A. et al. (2000). CD1d structure and regulation on human thymocytes, peripheral blood T cells, B cells and monocytes. *Immunology* **100**, 37-47.

Exley, M., Porcelli, S., Furman, M., Garcia, J. and Balk, S. (1998). CD161 (NKR-P1A) costimulation of CD1d-dependent activation of human T cells expressing invariant V alpha 24 J alpha Q T cell receptor alpha chains. *J Exp Med* **188**, 867-76.

Exley, M. A., Bigley, N. J., Cheng, O., Tahir, S. M., Smiley, S. T., Carter, Q. L., Stills, H. F., Grusby, M. J., Koezuka, Y., Taniguchi, M. et al. (2001). CD1d-reactive T-cell activation leads to amelioration of disease caused by diabetogenic encephalomyocarditis virus. *J Leukoc Biol* **69**, 713-8.

Exley, M. A., He, Q., Cheng, O., Wang, R. J., Cheney, C. P., Balk, S. P. and Koziel, M. J. (2002). Cutting edge: Compartmentalization of Th1-like noninvariant CD1d-reactive T cells in hepatitis C virus-infected liver. *J Immunol* **168**, 1519-23.

Fahrer, A. M., Konigshofer, Y., Kerr, E. M., Ghandour, G., Mack, D. H., Davis, M. M. and Chien, Y. H. (2001). Attributes of gammadelta intraepithelial lymphocytes as suggested by their transcriptional profile. *Proc Natl Acad Sci U S A* **98**, 10261-6.

Fan, Z., Yu, P., Wang, Y., Wang, Y., Fu, M. L., Liu, W., Sun, Y. and Fu, Y. X. (2006). NK-cell activation by LIGHT triggers tumor-specific CD8+ T-cell immunity to reject established tumors. *Blood* **107**, 1342-51.

Faunce, D. E., Sonoda, K. H. and Stein-Streilein, J. (2001). MIP-2 recruits NKT cells to the spleen during tolerance induction. *J Immunol* **166**, 313-21.

Faunce, D. E. and Stein-Streilein, J. (2002). NKT cell-derived RANTES recruits APCs and CD8+ T cells to the spleen during the generation of regulatory T cells in tolerance. *J Immunol* **169**, 31-8.

Fehling, H. J., Krotkova, A., Saint-Ruf, C. and von Boehmer, H. (1995). Crucial role of the pre-T-cell receptor alpha gene in development of alpha beta but not gamma delta T cells. *Nature* **375**, 795-8.

Fischer, K., Scotet, E., Niemeyer, M., Koebernick, H., Zerrahn, J., Maillet, S., Hurwitz, R., Kursar, M., Bonneville, M., Kaufmann, S. H. et al. (2004). Mycobacterial phosphatidylinositol mannoside is a natural antigen for CD1d-restricted T cells. *Proc Natl Acad Sci U S A* **101**, 10685-90.

Flajnik, M. F. and Kasahara, M. (2001). Comparative genomics of the MHC: glimpses into the evolution of the adaptive immune system. *Immunity* **15**, 351-62.

Forestier, C., Park, S. H., Wei, D., Benlagha, K., Teyton, L. and Bendelac, A. (2003). T cell development in mice expressing CD1d directed by a classical MHC class II promoter. *J Immunol* **171**, 4096-104.

Fowlkes, B. J., Kruisbeek, A. M., Ton-That, H., Weston, M. A., Coligan, J. E., Schwartz, R. H. and Pardoll, D. M. (1987). A novel population of T-cell receptor alpha beta-bearing thymocytes which predominantly expresses a single V beta gene family. *Nature* **329**, 251-4.

Franitza, S., Grabovsky, V., Wald, O., Weiss, I., Beider, K., Dagan, M., Darash-Yahana, M., Nagler, A., Brocke, S., Galun, E. et al. (2004). Differential usage of VLA-4 and CXCR4 by CD3+CD56+ NKT cells and CD56+CD16+ NK cells regulates their interaction with endothelial cells. *Eur J Immunol* **34**, 1333-41.

Franki, A. S., Van Beneden, K., Dewint, P., Meeus, I., Veys, E., Deforce, D. and Elewaut, D. (2005). Lymphotoxin alpha 1 beta 2: a critical mediator in V alpha 14i NKT cell differentiation. *Mol Immunol* **42**, 413-7.

Fujii, S., Shimizu, K., Kronenberg, M. and Steinman, R. M. (2002). Prolonged IFN-gamma-producing NKT response induced with alpha-galactosylceramide-loaded DCs. *Nat Immunol* **3**, 867-74.

Fujii, S., Shimizu, K., Smith, C., Bonifaz, L. and Steinman, R. M. (2003). Activation of natural killer T cells by alpha-galactosylceramide rapidly induces the full maturation of dendritic cells in vivo and thereby acts as an adjuvant for combined CD4 and CD8 T cell immunity to a coadministered protein. *J Exp Med* **198**, 267-79.

Fuss, I. J., Heller, F., Boirivant, M., Leon, F., Yoshida, M., Fichtner-Feigl, S., Yang, Z., Exley, M., Kitani, A., Blumberg, R. S. et al. (2004). Nonclassical CD1d-restricted NK T cells that produce IL-13 characterize an atypical Th2 response in ulcerative colitis. *J Clin Invest* **113**, 1490-7.

Galli, G., Nuti, S., Tavarini, S., Galli-Stampino, L., De Lalla, C., Casorati, G., Dellabona, P. and Abrignani, S. (2003a). CD1d-restricted help to B cells by human invariant natural killer T lymphocytes. *J Exp Med* **197**, 1051-7.

Galli, G., Nuti, S., Tavarini, S., Galli-Stampino, L., De Lalla, C., Casorati, G., Dellabona, P. and Abrignani, S. (2003b). Innate immune responses support adaptive immunity: NKT cells induce B cell activation. *Vaccine* **21 Suppl 2**, S48-54.

Gansert, J. L., Kiessler, V., Engele, M., Wittke, F., Rollinghoff, M., Krensky, A. M., Porcelli, S. A., Modlin, R. L. and Stenger, S. (2003). Human NKT cells express granulysin and exhibit antimycobacterial activity. *J Immunol* **170**, 3154-61.

Gapin, L., Matsuda, J. L., Surh, C. D. and Kronenberg, M. (2001). NKT cells derive from double-positive thymocytes that are positively selected by CD1d. *Nat Immunol* **2**, 971-8.

Garcia, V. E., Jullien, D., Song, M., Uyemura, K., Shuai, K., Morita, C. T. and Modlin, R. L. (1998). IL-15 enhances the response of human gamma delta T cells to nonpeptide [correction of nonpetide] microbial antigens. *J Immunol* **160**, 4322-9.

Gausling, R., Trollmo, C. and Hafler, D. A. (2001). Decreases in interleukin-4 secretion by invariant CD4(-)CD8(-)V alpha 24J alpha Q T cells in peripheral blood of patientswith relapsing-remitting multiple sclerosis. *Clin Immunol* **98**, 11-7.

Girardi, M. (2006). Immunosurveillance and immunoregulation by gammadelta T cells. *J Invest Dermatol* **126**, 25-31.

Glimcher, L. H., Townsend, M. J., Sullivan, B. M. and Lord, G. M. (2004). Recent developments in the transcriptional regulation of cytolytic effector cells. *Nat Rev Immunol* **4**, 900-11.

Godfrey, D. I., Kennedy, J., Mombaerts, P., Tonegawa, S. and Zlotnik, A. (1994). Onset of TCR-beta gene rearrangement and role of TCR-beta expression during CD3-CD4-CD8- thymocyte differentiation. *J Immunol* **152**, 4783-92.

Godfrey, D. I., Kennedy, J., Suda, T. and Zlotnik, A. (1993). A developmental pathway involving four phenotypically and functionally distinct subsets of CD3-CD4-CD8- triple-negative adult mouse thymocytes defined by CD44 and CD25 expression. *J Immunol* **150**, 4244-52.

Godfrey, D. I., Kinder, S. J., Silvera, P. and Baxter, A. G. (1997). Flow cytometric study of T cell development in NOD mice reveals a deficiency in alphabetaTCR+CDR-CD8- thymocytes. *J Autoimmun* **10**, 279-85.

Gombert, J. M., Herbelin, A., Tancrede-Bohin, E., Dy, M., Carnaud, C. and Bach, J. F. (1996). Early quantitative and functional deficiency of NK1+-like thymocytes in the NOD mouse. *Eur J Immunol* **26**, 2989-98.

Gumperz, J. E., Miyake, S., Yamamura, T. and Brenner, M. B. (2002). Functionally distinct subsets of CD1d-restricted natural killer T cells revealed by CD1d tetramer staining. *J Exp Med* **195**, 625-36.

Gumperz, J. E., Roy, C., Makowska, A., Lum, D., Sugita, M., Podrebarac, T., Koezuka, Y., Porcelli, S. A., Cardell, S., Brenner, M. B. et al. (2000). Murine CD1d-restricted T cell recognition of cellular lipids. *Immunity* **12**, 211-21.

Hammond, K. J., Pellicci, D. G., Poulton, L. D., Naidenko, O. V., Scalzo, A. A., Baxter, A. G. and Godfrey, D. I. (2001). CD1d-restricted NKT cells: an interstrain comparison. *J Immunol* **167**, 1164-73.

Hammond, K. J., Poulton, L. D., Palmisano, L. J., Silveira, P. A., Godfrey, D. I. and Baxter, A. G. (1998). alpha/beta-T cell receptor (TCR)+CD4-CD8- (NKT) thymocytes prevent insulin-dependent diabetes mellitus in nonobese diabetic (NOD)/Lt mice by the influence of interleukin (IL)-4 and/or IL-10. *J Exp Med* **187**, 1047-56.

Hansen, D. S., Siomos, M. A., Buckingham, L., Scalzo, A. A. and Schofield, L. (2003). Regulation of murine cerebral malaria pathogenesis by CD1d-restricted NKT cells and the natural killer complex. *Immunity* **18**, 391-402.

Hashimoto, W., Takeda, K., Anzai, R., Ogasawara, K., Sakihara, H., Sugiura, K., Seki, S. and Kumagai, K. (1995). Cytotoxic NK1.1 Ag+ alpha beta T cells with intermediate TCR induced in the liver of mice by IL-12. *J Immunol* **154**, 4333-40.

Hayakawa, Y., Takeda, K., Yagita, H., Smyth, M. J., Van Kaer, L., Okumura, K. and Saiki, I. (2002). IFN-gamma-mediated inhibition of tumor angiogenesis by natural killer T-cell ligand, alpha-galactosylceramide. *Blood* **100**, 1728-33.

Hayakawa, Y., Takeda, K., Yagita, H., Van Kaer, L., Saiki, I. and Okumura, K. (2001). Differential regulation of Th1 and Th2 functions of NKT cells by CD28 and CD40 costimulatory pathways. *J Immunol* **166**, 6012-8.

Herberman, R. B., Nunn, M. E., Holden, H. T. and Lavrin, D. H. (1975). Natural cytotoxic reactivity of mouse lymphoid cells against syngeneic and allogeneic tumors. II. Characterization of effector cells. *Int J Cancer* **16**, 230-9.

Hermans, I. F., Silk, J. D., Gileadi, U., Salio, M., Mathew, B., Ritter, G., Schmidt, R., Harris, A. L., Old, L. and Cerundolo, V. (2003). NKT cells enhance CD4+ and CD8+ T cell responses to soluble antigen in vivo through direct interaction with dendritic cells. *J Immunol* **171**, 5140-7.

Hess, J., Ladel, C., Miko, D. and Kaufmann, S. H. (1996). Salmonella typhimurium aroA-infection in gene-targeted immunodeficient mice: major role of CD4+ TCR-alpha beta cells and IFN-gamma in bacterial clearance independent of intracellular location. *J Immunol* **156**, 3321-6.

Higuchi, M., Zeng, D., Shizuru, J., Gworek, J., Dejbakhsh-Jones, S., Taniguchi, M. and Strober, S. (2002). Immune tolerance to combined organ and bone marrow transplants after fractionated lymphoid irradiation involves regulatory NK T cells and clonal deletion. *J Immunol* **169**, 5564-70.

Hiromatsu, T., Matsuguchi, T., Shimizu, H., Yajima, T., Nishimura, H., Arai, T., Nimura, Y. and Yoshikai, Y. (2003). NK T cells stimulated with a ligand for TLR2 at least partly contribute to liver injury caused by Escherichia coli infection in mice. *Eur J Immunol* **33**, 2511-9.

Hobbs, J. A., Cho, S., Roberts, T. J., Sriram, V., Zhang, J., Xu, M. and Brutkiewicz, R. R. (2001). Selective loss of natural killer T cells by apoptosis following infection with lymphocytic choriomeningitis virus. *J Virol* **75**, 10746-54.

Hoffman, E. S., Passoni, L., Crompton, T., Leu, T. M., Schatz, D. G., Koff, A., Owen, M. J. and Hayday, A. C. (1996). Productive T-cell receptor beta-chain gene rearrangement: coincident regulation of cell cycle and clonality during development in vivo. *Genes Dev* **10**, 948-62.

Honey, K., Benlagha, K., Beers, C., Forbush, K., Teyton, L., Kleijmeer, M. J., Rudensky, A. Y. and Bendelac, A. (2002). Thymocyte expression of cathepsin L is essential for NKT cell development. *Nat Immunol* **3**, 1069-74.

Ikehara, Y., Yasunami, Y., Kodama, S., Maki, T., Nakano, M., Nakayama, T., Taniguchi, M. and Ikeda, S. (2000). CD4(+) Valpha14 natural killer T cells are essential for acceptance of rat islet xenografts in mice. *J Clin Invest* **105**, 1761-7.

Ishigami, M., Nishimura, H., Naiki, Y., Yoshioka, K., Kawano, T., Tanaka, Y., Taniguchi, M., Kakumu, S. and Yoshikai, Y. (1999). The roles of intrahepatic Valpha14(+) NK1.1(+) T cells for liver injury induced by Salmonella infection in mice. *Hepatology* **29**, 1799-808.

Ishikawa, H., Hisaeda, H., Taniguchi, M., Nakayama, T., Sakai, T., Maekawa, Y., Nakano, Y., Zhang, M., Zhang, T., Nishitani, M. et al. (2000). CD4(+) v(alpha)14 NKT cells play a crucial role in an early stage of protective immunity against infection with Leishmania major. *Int Immunol* **12**, 1267-74.

Jahng, A., Maricic, I., Aguilera, C., Cardell, S., Halder, R. C. and Kumar, V. (2004). Prevention of autoimmunity by targeting a distinct, noninvariant CD1d-reactive T cell population reactive to sulfatide. *J Exp Med* **199**, 947-57.

Jiang, S., Game, D. S., Davies, D., Lombardi, G. and Lechler, R. I. (2005). Activated CD1d-restricted natural killer T cells secrete IL-2: innate help for CD4+CD25+ regulatory T cells? *Eur J Immunol* **35**, 1193-200.

Johnston, B., Kim, C. H., Soler, D., Emoto, M. and Butcher, E. C. (2003). Differential chemokine responses and homing patterns of murine TCR alpha beta NKT cell subsets. *J Immunol* **171**, 2960-9.

Kagaya, K., Watanabe, K. and Fukazawa, Y. (1989). Capacity of recombinant gamma interferon to activate macrophages for Salmonella-killing activity. *Infect Immun* **57**, 609-15.

Kaneda, H., Takeda, K., Ota, T., Kaduka, Y., Akiba, H., Ikarashi, Y., Wakasugi, H., Kronenberg, M., Kinoshita, K., Yagita, H. et al. (2005). ICOS costimulates invariant NKT cell activation. *Biochem Biophys Res Commun* **327**, 201-7.

Kawakami, K., Kinjo, Y., Uezu, K., Yara, S., Miyagi, K., Koguchi, Y., Nakayama, T., Taniguchi, M. and Saito, A. (2001). Monocyte chemoattractant protein-1-dependent increase of V alpha 14 NKT cells in lungs and their roles in Th1 response and host defense in cryptococcal infection. *J Immunol* **167**, 6525-32.

Kawakami, K., Yamamoto, N., Kinjo, Y., Miyagi, K., Nakasone, C., Uezu, K., Kinjo, T., Nakayama, T., Taniguchi, M. and Saito, A. (2003). Critical role of Valpha14+ natural killer T cells in the innate phase of host protection against Streptococcus pneumoniae infection. *Eur J Immunol* **33**, 3322-30.

Kawamoto, H., Ohmura, K., Fujimoto, S., Lu, M., Ikawa, T. and Katsura, Y. (2003). Extensive proliferation of T cell lineage-restricted progenitors in the thymus: an essential process for clonal expression of diverse T cell receptor beta chains. *Eur J Immunol* **33**, 606-15.

Kawano, T., Cui, J., Koezuka, Y., Toura, I., Kaneko, Y., Motoki, K., Ueno, H., Nakagawa, R., Sato, H., Kondo, E. et al. (1997). CD1d-restricted and TCR-mediated activation of valpha14 NKT cells by glycosylceramides. *Science* **278**, 1626-9.

Kawano, T., Cui, J., Koezuka, Y., Toura, I., Kaneko, Y., Sato, H., Kondo, E., Harada, M., Koseki, H., Nakayama, T. et al. (1998). Natural killer-like nonspecific tumor cell lysis mediated by specific ligand-activated Valpha14 NKT cells. *Proc Natl Acad Sci U S A* **95**, 5690-3.

Kawano, T., Nakayama, T., Kamada, N., Kaneko, Y., Harada, M., Ogura, N., Akutsu, Y., Motohashi, S., Iizasa, T., Endo, H. et al. (1999). Antitumor cytotoxicity mediated by ligand-activated human V alpha24 NKT cells. *Cancer Res* **59**, 5102-5.

Kawasaki, S., Moriguchi, R., Sekiya, K., Nakai, T., Ono, E., Kume, K. and Kawahara, K. (1994). The cell envelope structure of the lipopolysaccharide-lacking gram-negative bacterium Sphingomonas paucimobilis. *J Bacteriol* **176**, 284-90.

Kiessling, R., Klein, E., Pross, H. and Wigzell, H. (1975). "Natural" killer cells in the mouse. II. Cytotoxic cells with specificity for mouse Moloney leukemia cells. Characteristics of the killer cell. *Eur J Immunol* **5**, 117-21.

Kim, C. H., Butcher, E. C. and Johnston, B. (2002a). Distinct subsets of human Valpha24-invariant NKT cells: cytokine responses and chemokine receptor expression. *Trends Immunol* **23**, 516-9.

Kim, C. H., Johnston, B. and Butcher, E. C. (2002b). Trafficking machinery of NKT cells: shared and differential chemokine receptor expression among V alpha 24(+)V beta 11(+) NKT cell subsets with distinct cytokine-producing capacity. *Blood* **100**, 11-6.

Kim, H. J., Hwang, S. J., Kim, B. K., Jung, K. C. and Chung, D. H. (2006a). NKT cells play critical roles in the induction of oral tolerance by inducing regulatory T cells producing IL-10 and transforming growth factor beta, and by clonally deleting antigen-specific T cells. *Immunology* **118**, 101-11.

Kim, H. J., Kim, H. Y., Kim, B. K., Kim, S. and Chung, D. H. (2006b). Engagement of glucocorticoid-induced TNF receptor costimulates NKT cell activation in vitro and in vivo. *J Immunol* **176**, 3507-15.

Kinjo, Y. and Kronenberg, M. (2005). Valpha14i NKT cells are innate lymphocytes that participate in the immune response to diverse microbes. *J Clin Immunol* **25**, 522-33.

Kinjo, Y., Wu, D., Kim, G., Xing, G. W., Poles, M. A., Ho, D. D., Tsuji, M., Kawahara, K., Wong, C. H. and Kronenberg, M. (2005). Recognition of bacterial glycosphingolipids by natural killer T cells. *Nature* **434**, 520-5.

Kirby, A. C., Yrlid, U. and Wick, M. J. (2002). The innate immune response differs in primary and secondary Salmonella infection. *J Immunol* **169**, 4450-9.

Kitamura, H., Iwakabe, K., Yahata, T., Nishimura, S., Ohta, A., Ohmi, Y., Sato, M., Takeda, K., Okumura, K., Van Kaer, L. et al. (1999). The natural killer T (NKT) cell ligand alpha-galactosylceramide demonstrates its immunopotentiating effect by inducing interleukin (IL)-12 production by dendritic cells and IL-12 receptor expression on NKT cells. *J Exp Med* **189**, 1121-8.

Kitamura, H., Ohta, A., Sekimoto, M., Sato, M., Iwakabe, K., Nakui, M., Yahata, T., Meng, H., Koda, T., Nishimura, S. et al. (2000). alpha-galactosylceramide induces early B-cell activation through IL-4 production by NKT cells. *Cell Immunol* **199**, 37-42.

Kobayashi, E., Motoki, K., Uchida, T., Fukushima, H. and Koezuka, Y. (1995). KRN7000, a novel immunomodulator, and its antitumor activities. *Oncol Res* **7**, 529-34.

Kobrynski, L. J., Sousa, A. O., Nahmias, A. J. and Lee, F. K. (2005). Cutting edge: antibody production to pneumococcal polysaccharides requires CD1 molecules and CD8+ T cells. *J Immunol* **174**, 1787-90.

Kojo, S., Seino, K., Harada, M., Watarai, H., Wakao, H., Uchida, T., Nakayama, T. and Taniguchi, M. (2005). Induction of regulatory properties in dendritic cells by Valpha14 NKT cells. *J Immunol* **175**, 3648-55.

Krajina, T., Leithauser, F., Moller, P., Trobonjaca, Z. and Reimann, J. (2003). Colonic lamina propria dendritic cells in mice with CD4+ T cell-induced colitis. *Eur J Immunol* **33**, 1073-83.

Kronenberg, M. (2005). Toward an understanding of NKT cell biology: progress and paradoxes. *Annu Rev Immunol* **23**, 877-900.

Laloux, V., Beaudoin, L., Jeske, D., Carnaud, C. and Lehuen, A. (2001). NK T cell-induced protection against diabetes in V alpha 14-J alpha 281 transgenic nonobese diabetic mice is associated with a Th2 shift circumscribed regionally to the islets and functionally to islet autoantigen. *J Immunol* **166**, 3749-56.

Lan, F., Zeng, D., Higuchi, M., Higgins, J. P. and Strober, S. (2003). Host conditioning with total lymphoid irradiation and antithymocyte globulin prevents graft-versus-host disease: the role of CD1-reactive natural killer T cells. *Biol Blood Marrow Transplant* **9**, 355-63.

Lang, G. A., Illarionov, P. A., Glatman-Freedman, A., Besra, G. S. and Lang, M. L. (2005). BCR targeting of biotin-{alpha}-galactosylceramide leads to enhanced presentation on CD1d and requires transport of BCR to CD1d-containing endocytic compartments. *Int Immunol* **17**, 899-908.

Lantz, O. and Bendelac, A. (1994). An invariant T cell receptor alpha chain is used by a unique subset of major histocompatibility complex class I-specific CD4+ and CD4-8- T cells in mice and humans. *J Exp Med* **180**, 1097-106.

Lee, P. T., Benlagha, K., Teyton, L. and Bendelac, A. (2002). Distinct functional lineages of human V(alpha)24 natural killer T cells. *J Exp Med* **195**, 637-41.

Lehuen, A., Lantz, O., Beaudoin, L., Laloux, V., Carnaud, C., Bendelac, A., Bach, J. F. and Monteiro, R. C. (1998). Overexpression of natural killer T cells protects Valpha14-Jalpha281 transgenic nonobese diabetic mice against diabetes. *J Exp Med* **188**, 1831-9.

Leite-De-Moraes, M. C., Hameg, A., Arnould, A., Machavoine, F., Koezuka, Y., Schneider, E., Herbelin, A. and Dy, M. (1999). A distinct IL-18-induced pathway to fully activate NK T lymphocytes independently from TCR engagement. *J Immunol* **163**, 5871-6.

Levitsky, H. I., Golumbek, P. T. and Pardoll, D. M. (1991). The fate of CD4-8- T cell receptor-alpha beta+ thymocytes. *J Immunol* **146**, 1113-7.

Liu, R., La Cava, A., Bai, X. F., Jee, Y., Price, M., Campagnolo, D. I., Christadoss, P., Vollmer, T. L., Van Kaer, L. and Shi, F. D. (2005). Cooperation of invariant NKT cells and CD4+CD25+ T regulatory cells in the prevention of autoimmune myasthenia. *J Immunol* **175**, 7898-904.

Lo, W. F., Ong, H., Metcalf, E. S. and Soloski, M. J. (1999). T cell responses to Gram-negative intracellular bacterial pathogens: a role for CD8+ T cells in immunity to Salmonella infection and the involvement of MHC class Ib molecules. *J Immunol* **162**, 5398-406.

Lodolce, J. P., Boone, D. L., Chai, S., Swain, R. E., Dassopoulos, T., Trettin, S. and Ma, A. (1998). IL-15 receptor maintains lymphoid homeostasis by supporting lymphocyte homing and proliferation. *Immunity* **9**, 669-76.

Lopes-Carvalho, T., Foote, J. and Kearney, J. F. (2005). Marginal zone B cells in lymphocyte activation and regulation. *Curr Opin Immunol* **17**, 244-50.

Lopes-Carvalho, T. and Kearney, J. F. (2004). Development and selection of marginal zone B cells. *Immunol Rev* **197**, 192-205.

Maeda, M., Lohwasser, S., Yamamura, T. and Takei, F. (2001). Regulation of NKT cells by Ly49: analysis of primary NKT cells and generation of NKT cell line. *J Immunol* **167**, 4180-6.

Makino, Y., Kanno, R., Ito, T., Higashino, K. and Taniguchi, M. (1995). Predominant expression of invariant V alpha 14+ TCR alpha chain in NK1.1+ T cell populations. *Int Immunol* **7**, 1157-61.

Makowska, A., Kawano, T., Taniguchi, M. and Cardell, S. (2000). Differences in the ligand specificity between CD1d-restricted T cells with limited and diverse T-cell receptor repertoire. *Scand J Immunol* **52**, 71-9.

Mars, L. T., Laloux, V., Goude, K., Desbois, S., Saoudi, A., Van Kaer, L., Lassmann, H., Herbelin, A., Lehuen, A. and Liblau, R. S. (2002). Cutting edge: V alpha 14-J alpha 281 NKT cells naturally regulate experimental autoimmune encephalomyelitis in nonobese diabetic mice. *J Immunol* **168**, 6007-11.

Martin-Fontecha, A., Thomsen, L. L., Brett, S., Gerard, C., Lipp, M., Lanzavecchia, A. and Sallusto, F. (2004). Induced recruitment of NK cells to lymph nodes provides IFN-gamma for T(H)1 priming. *Nat Immunol* **5**, 1260-5.

Martin, F. and Kearney, J. F. (2002). Marginal-zone B cells. *Nat Rev Immunol* **2**, 323-35.

Maruoka, T., Tanabe, H., Chiba, M. and Kasahara, M. (2005). Chicken CD1 genes are located in the MHC: CD1 and endothelial protein C receptor genes constitute a distinct subfamily of class-I-like genes that predates the emergence of mammals. *Immunogenetics* **57**, 590-600.

Matsuda, J. L. and Gapin, L. (2005). Developmental program of mouse Valpha14i NKT cells. *Curr Opin Immunol* **17**, 122-30.

Matsuda, J. L., Gapin, L., Sidobre, S., Kieper, W. C., Tan, J. T., Ceredig, R., Surh, C. D. and Kronenberg, M. (2002). Homeostasis of V alpha 14i NKT cells. *Nat Immunol* **3**, 966-74.

Matsuda, J. L., Naidenko, O. V., Gapin, L., Nakayama, T., Taniguchi, M., Wang, C. R., Koezuka, Y. and Kronenberg, M. (2000). Tracking the response of natural killer T cells to a glycolipid antigen using CD1d tetramers. *J Exp Med* **192**, 741-54.

Matsuda, J. L., Zhang, Q., Ndonye, R., Richardson, S. K., Howell, A. R. and Gapin, L. (2006). T-bet concomitantly controls migration, survival, and effector functions during the development of Valpha14i NKT cells. *Blood* **107**, 2797-805.

Mattner, J., Debord, K. L., Ismail, N., Goff, R. D., Cantu, C., 3rd, Zhou, D., Saint-Mezard, P., Wang, V., Gao, Y., Yin, N. et al. (2005). Exogenous and endogenous glycolipid antigens activate NKT cells during microbial infections. *Nature* **434**, 525-9.

McSorley, S. J., Asch, S., Costalonga, M., Reinhardt, R. L. and Jenkins, M. K. (2002). Tracking salmonella-specific CD4 T cells in vivo reveals a local mucosal response to a disseminated infection. *Immunity* **16**, 365-77.

McSorley, S. J., Cookson, B. T. and Jenkins, M. K. (2000). Characterization of CD4+ T cell responses during natural infection with Salmonella typhimurium. *J Immunol* **164**, 986-93.

Mendiratta, S. K., Martin, W. D., Hong, S., Boesteanu, A., Joyce, S. and Van Kaer, L. (1997). CD1d1 mutant mice are deficient in natural T cells that promptly produce IL-4. *Immunity* **6**, 469-77.

Metelitsa, L. S., Naidenko, O. V., Kant, A., Wu, H. W., Loza, M. J., Perussia, B., Kronenberg, M. and Seeger, R. C. (2001). Human NKT cells mediate antitumor cytotoxicity directly by recognizing target cell CD1d with bound ligand or indirectly by producing IL-2 to activate NK cells. *J Immunol* **167**, 3114-22.

Metelitsa, L. S., Weinberg, K. I., Emanuel, P. D. and Seeger, R. C. (2003). Expression of CD1d by myelomonocytic leukemias provides a target for cytotoxic NKT cells. *Leukemia* **17**, 1068-77.

Milicevic, N. M. and Milicevic, Z. (2004). Thymus cell-cell interactions. *Int Rev Cytol* **235**, 1-52.

Miller, M. M., Wang, C., Parisini, E., Coletta, R. D., Goto, R. M., Lee, S. Y., Barral, D. C., Townes, M., Roura-Mir, C., Ford, H. L. et al. (2005). Characterization of two avian MHC-like genes reveals an ancient origin of the CD1 family. *Proc Natl Acad Sci U S A* **102**, 8674-9.

Mittrucker, H. W. and Kaufmann, S. H. (2000). Immune response to infection with Salmonella typhimurium in mice. *J Leukoc Biol* **67**, 457-63.

Mora, J. R., Bono, M. R., Manjunath, N., Weninger, W., Cavanagh, L. L., Rosemblatt, M. and Von Andrian, U. H. (2003). Selective imprinting of gut-homing T cells by Peyer's patch dendritic cells. *Nature* **424**, 88-93.

Mullen, A. C., Hutchins, A. S., High, F. A., Lee, H. W., Sykes, K. J., Chodosh, L. A. and Reiner, S. L. (2002). Hlx is induced by and genetically interacts with T-bet to promote heritable T(H)1 gene induction. *Nat Immunol* **3**, 652-8.

Naiki, Y., Nishimura, H., Kawano, T., Tanaka, Y., Itohara, S., Taniguchi, M. and Yoshikai, Y. (1999). Regulatory role of peritoneal NK1.1+ alpha beta T cells in IL-12 production during Salmonella infection. *J Immunol* **163**, 2057-63.

Nakagawa, R., Nagafune, I., Tazunoki, Y., Ehara, H., Tomura, H., Iijima, R., Motoki, K., Kamishohara, M. and Seki, S. (2001). Mechanisms of the antimetastatic effect in the liver and of the hepatocyte injury induced by alpha-galactosylceramide in mice. *J Immunol* **166**, 6578-84.

Nakamura, T., Sonoda, K. H., Faunce, D. E., Gumperz, J., Yamamura, T., Miyake, S. and Stein-Streilein, J. (2003). CD4+ NKT cells, but not conventional CD4+ T cells, are required to generate efferent CD8+ T regulatory cells following antigen inoculation in an immune-privileged site. *J Immunol* **171**, 1266-71.

Nauciel, C. and Espinasse-Maes, F. (1992). Role of gamma interferon and tumor necrosis factor alpha in resistance to Salmonella typhimurium infection. *Infect Immun* **60**, 450-4.

Naumov, Y. N., Bahjat, K. S., Gausling, R., Abraham, R., Exley, M. A., Koezuka, Y., Balk, S. B., Strominger, J. L., Clare-Salzer, M. and Wilson, S. B. (2001). Activation of CD1d-restricted T cells protects NOD mice from developing diabetes by regulating dendritic cell subsets. *Proc Natl Acad Sci U S A* **98**, 13838-43.

Nieda, M., Nicol, A., Koezuka, Y., Kikuchi, A., Lapteva, N., Tanaka, Y., Tokunaga, K., Suzuki, K., Kayagaki, N., Yagita, H. et al. (2001). TRAIL expression by activated human CD4(+)V alpha 24NKT cells induces in vitro and in vivo apoptosis of human acute myeloid leukemia cells. *Blood* **97**, 2067-74.

Niederkorn, J. Y. (2006). See no evil, hear no evil, do no evil: the lessons of immune privilege. *Nat Immunol* **7**, 354-9.

Nieuwenhuis, E. E., Matsumoto, T., Exley, M., Schleipman, R. A., Glickman, J., Bailey, D. T., Corazza, N., Colgan, S. P., Onderdonk, A. B. and Blumberg, R. S. (2002). CD1d-dependent macrophage-mediated clearance of Pseudomonas aeruginosa from lung. *Nat Med* **8**, 588-93.

Nishikawa, H., Kato, T., Tanida, K., Hiasa, A., Tawara, I., Ikeda, H., Ikarashi, Y., Wakasugi, H., Kronenberg, M., Nakayama, T. et al. (2003). CD4+ CD25+ T cells responding to serologically defined autoantigens suppress antitumor immune responses. *Proc Natl Acad Sci U S A* **100**, 10902-6.

Novak, J., Beaudoin, L., Griseri, T. and Lehuen, A. (2005). Inhibition of T cell differentiation into effectors by NKT cells requires cell contacts. *J Immunol* **174**, 1954-61.

Ohteki, T., Ho, S., Suzuki, H., Mak, T. W. and Ohashi, P. S. (1997). Role for IL-15/IL-15 receptor beta-chain in natural killer 1.1+ T cell receptor-alpha beta+ cell development. *J Immunol* **159**, 5931-5.

Ostrand-Rosenberg, S., Clements, V. K., Terabe, M., Park, J. M., Berzofsky, J. A. and Dissanayake, S. K. (2002). Resistance to metastatic disease in STAT6-deficient mice requires hemopoietic and nonhemopoietic cells and is IFN-gamma dependent. *J Immunol* **169**, 5796-804.

Park, S. H., Roark, J. H. and Bendelac, A. (1998). Tissue-specific recognition of mouse CD1 molecules. *J Immunol* **160**, 3128-34.

Park, S. H., Weiss, A., Benlagha, K., Kyin, T., Teyton, L. and Bendelac, A. (2001). The mouse CD1d-restricted repertoire is dominated by a few autoreactive T cell receptor families. *J Exp Med* **193**, 893-904.

Pearce, E. L., Mullen, A. C., Martins, G. A., Krawczyk, C. M., Hutchins, A. S., Zediak, V. P., Banica, M., DiCioccio, C. B., Gross, D. A., Mao, C. A. et al. (2003). Control of effector CD8+ T cell function by the transcription factor Eomesodermin. *Science* **302**, 1041-3.

Pellicci, D. G., Hammond, K. J., Uldrich, A. P., Baxter, A. G., Smyth, M. J. and Godfrey, D. I. (2002). A natural killer T (NKT) cell developmental pathway iInvolving a thymus-dependent NK1.1(-)CD4(+) CD1d-dependent precursor stage. *J Exp Med* **195**, 835-44.

Pende, D., Bottino, C., Castriconi, R., Cantoni, C., Marcenaro, S., Rivera, P., Spaggiari, G. M., Dondero, A., Carnemolla, B., Reymond, N. et al. (2005). PVR (CD155) and Nectin-2 (CD112) as ligands of the human DNAM-1 (CD226) activating receptor: involvement in tumor cell lysis. *Mol Immunol* **42**, 463-9.

Pennington, D. J., Silva-Santos, B., Shires, J., Theodoridis, E., Pollitt, C., Wise, E. L., Tigelaar, R. E., Owen, M. J. and Hayday, A. C. (2003). The inter-relatedness and interdependence of mouse T cell receptor gammadelta+ and alphabeta+ cells. *Nat Immunol* **4**, 991-8.

Pie, S., Truffa-Bachi, P., Pla, M. and Nauciel, C. (1997). Th1 response in Salmonella typhimurium-infected mice with a high or low rate of bacterial clearance. *Infect Immun* **65**, 4509-14.

Porcelli, S., Yockey, C. E., Brenner, M. B. and Balk, S. P. (1993). Analysis of T cell antigen receptor (TCR) expression by human peripheral blood CD4-8- alpha/beta T cells demonstrates preferential use of several V beta genes and an invariant TCR alpha chain. *J Exp Med* **178**, 1-16.

Pui, J. C., Allman, D., Xu, L., DeRocco, S., Karnell, F. G., Bakkour, S., Lee, J. Y., Kadesch, T., Hardy, R. R., Aster, J. C. et al. (1999). Notch1 expression in early lymphopoiesis influences B versus T lineage determination. *Immunity* **11**, 299-308.

Radtke, F., Wilson, A., Stark, G., Bauer, M., van Meerwijk, J., MacDonald, H. R. and Aguet, M. (1999). Deficient T cell fate specification in mice with an induced inactivation of Notch1. *Immunity* **10**, 547-58.

Ranson, T., Bregenholt, S., Lehuen, A., Gaillot, O., Leite-de-Moraes, M. C., Herbelin, A., Berche, P. and Di Santo, J. P. (2005). Invariant V alpha 14+ NKT cells participate in the early response to enteric Listeria monocytogenes infection. *J Immunol* **175**, 1137-44.

Ranson, T., Vosshenrich, C. A., Corcuff, E., Richard, O., Laloux, V., Lehuen, A. and Di Santo, J. P. (2003). IL-15 availability conditions homeostasis of peripheral natural killer T cells. *Proc Natl Acad Sci U S A* **100**, 2663-8.

Roelofs-Haarhuis, K., Wu, X. and Gleichmann, E. (2004). Oral tolerance to nickel requires CD4+ invariant NKT cells for the infectious spread of tolerance and the induction of specific regulatory T cells. *J Immunol* **173**, 1043-50.

Rudolph, M. G., Stanfield, R. L. and Wilson, I. A. (2006). How TCRs bind MHCs, peptides, and coreceptors. *Annu Rev Immunol* **24**, 419-66.

Sagiv, Y., Hudspeth, K., Mattner, J., Schrantz, N., Stern, R. K., Zhou, D., Savage, P. B., Teyton, L. and Bendelac, A. (2006). Cutting edge: impaired glycosphingolipid trafficking and NKT cell development in mice lacking niemann-pick type c1 protein. *J Immunol* **177**, 26-30.

Salomonsen, J., Sorensen, M. R., Marston, D. A., Rogers, S. L., Collen, T., van Hateren, A., Smith, A. L., Beal, R. K., Skjodt, K. and Kaufman, J. (2005). Two CD1 genes map to the chicken MHC, indicating that CD1 genes are ancient and likely to have been present in the primordial MHC. *Proc Natl Acad Sci U S A* **102**, 8668-73.

Sandberg, J. K. and Ljunggren, H. G. (2005). Development and function of CD1d-restricted NKT cells: influence of sphingolipids, SAP and sex. *Trends Immunol* **26**, 347-9.

Schmitt, C., Tonnelle, C., Dalloul, A., Chabannon, C., Debre, P. and Rebollo, A. (2002). Aiolos and Ikaros: regulators of lymphocyte development, homeostasis and lymphoproliferation. *Apoptosis* **7**, 277-84.

Schofield, L., McConville, M. J., Hansen, D., Campbell, A. S., Fraser-Reid, B., Grusby, M. J. and Tachado, S. D. (1999). CD1d-restricted immunoglobulin G formation to GPI-anchored antigens mediated by NKT cells. *Science* **283**, 225-9.

Schumann, J., Pittoni, P., Tonti, E., Macdonald, H. R., Dellabona, P. and Casorati, G. (2005). Targeted expression of human CD1d in transgenic mice reveals independent roles for thymocytes and thymic APCs in positive and negative selection of Valpha14i NKT cells. *J Immunol* **175**, 7303-10.

Seino, K., Fujii, S., Harada, M., Motohashi, S., Nakayama, T., Fujisawa, T. and Taniguchi, M. (2005). Valpha14 NKT cell-mediated anti-tumor responses and their clinical application. *Springer Semin Immunopathol* **27**, 65-74.

Seino, K. I., Fukao, K., Muramoto, K., Yanagisawa, K., Takada, Y., Kakuta, S., Iwakura, Y., Van Kaer, L., Takeda, K., Nakayama, T. et al. (2001). Requirement for natural killer T (NKT) cells in the induction of allograft tolerance. *Proc Natl Acad Sci U S A* **98**, 2577-81.

Sen, Y., Yongyi, B., Yuling, H., Luokun, X., Li, H., Jie, X., Tao, D., Gang, Z., Junyan, L., Chunsong, H. et al. (2005). V alpha 24-invariant NKT cells from patients with allergic asthma express CCR9 at high frequency and induce Th2 bias of CD3+ T cells upon CD226 engagement. *J Immunol* **175**, 4914-26.

Shen, H. Q., Lu, M., Ikawa, T., Masuda, K., Ohmura, K., Minato, N., Katsura, Y. and Kawamoto, H. (2003). T/NK bipotent progenitors in the thymus retain the potential to generate dendritic cells. *J Immunol* **171**, 3401-6.

Shi, F. D., Flodstrom, M., Balasa, B., Kim, S. H., Van Gunst, K., Strominger, J. L., Wilson, S. B. and Sarvetnick, N. (2001). Germ line deletion of the CD1 locus exacerbates diabetes in the NOD mouse. *Proc Natl Acad Sci U S A* **98**, 6777-82.

Shimizu, H., Matsuguchi, T., Fukuda, Y., Nakano, I., Hayakawa, T., Takeuchi, O., Akira, S., Umemura, M., Suda, T. and Yoshikai, Y. (2002). Toll-like receptor 2 contributes to liver injury by Salmonella infection through Fas ligand expression on NKT cells in mice. *Gastroenterology* **123**, 1265-77.

Singh, A. K., Wilson, M. T., Hong, S., Olivares-Villagomez, D., Du, C., Stanic, A. K., Joyce, S., Sriram, S., Koezuka, Y. and Van Kaer, L. (2001). Natural killer T cell activation protects mice against experimental autoimmune encephalomyelitis. *J Exp Med* **194**, 1801-11.

Sinha, P., Clements, V. K. and Ostrand-Rosenberg, S. (2005). Interleukin-13-regulated M2 macrophages in combination with myeloid suppressor cells block immune surveillance against metastasis. *Cancer Res* **65**, 11743-51.

Skold, M. and Behar, S. M. (2003). Role of CD1d-restricted NKT cells in microbial immunity. *Infect Immun* **71**, 5447-55.

Skold, M. and Cardell, S. (2000). Differential regulation of Ly49 expression on CD4+ and CD4-CD8- (double negative) NK1.1+ T cells. *Eur J Immunol* **30**, 2488-96.

Skold, M., Faizunnessa, N. N., Wang, C. R. and Cardell, S. (2000). CD1d-specific NK1.1+ T cells with a transgenic variant TCR. *J Immunol* **165**, 168-74.

Skold, M., Xiong, X., Illarionov, P. A., Besra, G. S. and Behar, S. M. (2005). Interplay of cytokines and microbial signals in regulation of CD1d expression and NKT cell activation. *J Immunol* **175**, 3584-93.

Slobedman, B., Mocarski, E. S., Arvin, A. M., Mellins, E. D. and Abendroth, A. (2002). Latent cytomegalovirus down-regulates major histocompatibility complex class II expression on myeloid progenitors. *Blood* **100**, 2867-73.

Smiley, S. T., Kaplan, M. H. and Grusby, M. J. (1997). Immunoglobulin E production in the absence of interleukin-4-secreting CD1-dependent cells. *Science* **275**, 977-9.

Smyth, M. J., Thia, K. Y., Street, S. E., Cretney, E., Trapani, J. A., Taniguchi, M., Kawano, T., Pelikan, S. B., Crowe, N. Y. and Godfrey, D. I. (2000). Differential tumor surveillance by natural killer (NK) and NKT cells. *J Exp Med* **191**, 661-8.

Snyder, M. R., Weyand, C. M. and Goronzy, J. J. (2004). The double life of NK receptors: stimulation or co-stimulation? *Trends Immunol* **25**, 25-32.

Sonoda, K. H., Exley, M., Snapper, S., Balk, S. P. and Stein-Streilein, J. (1999). CD1-reactive natural killer T cells are required for development of systemic tolerance through an immune-privileged site. *J Exp Med* **190**, 1215-26.

Sonoda, K. H., Faunce, D. E., Taniguchi, M., Exley, M., Balk, S. and Stein-Streilein, J. (2001). NK T cell-derived IL-10 is essential for the differentiation of antigen-specific T regulatory cells in systemic tolerance. *J Immunol* **166**, 42-50.

Sonoda, K. H. and Stein-Streilein, J. (2002). CD1d on antigen-transporting APC and splenic marginal zone B cells promotes NKT cell-dependent tolerance. *Eur J Immunol* **32**, 848-57.

Spada, F. M., Borriello, F., Sugita, M., Watts, G. F., Koezuka, Y. and Porcelli, S. A. (2000). Low expression level but potent antigen presenting function of CD1d on monocyte lineage cells. *Eur J Immunol* **30**, 3468-77.

Spada, F. M., Koezuka, Y. and Porcelli, S. A. (1998). CD1d-restricted recognition of synthetic glycolipid antigens by human natural killer T cells. *J Exp Med* **188**, 1529-34.

Srinivasan, A. and McSorley, S. J. (2006). Activation of Salmonella-specific immune responses in the intestinal mucosa. *Arch Immunol Ther Exp (Warsz)* **54**, 25-31.

Sriram, V., Du, W., Gervay-Hague, J. and Brutkiewicz, R. R. (2005). Cell wall glycosphingolipids of Sphingomonas paucimobilis are CD1d-specific ligands for NKT cells. *Eur J Immunol* **35**, 1692-701.

Stagg, A. J., Kamm, M. A. and Knight, S. C. (2002). Intestinal dendritic cells increase T cell expression of alpha4beta7 integrin. *Eur J Immunol* **32**, 1445-54.

Stark, S. and Watzl, C. (2006). 2B4 (CD244), NTB-A and CRACC (CS1) stimulate cytotoxicity but no proliferation in human NK cells. *Int Immunol* **18**, 241-7.

Stein, J. V. and Nombela-Arrieta, C. (2005). Chemokine control of lymphocyte trafficking: a general overview. *Immunology* **116**, 1-12.

Stenstrom, M., Skold, M., Ericsson, A., Beaudoin, L., Sidobre, S., Kronenberg, M., Lehuen, A. and Cardell, S. (2004). Surface receptors identify mouse NK1.1+ T cell subsets distinguished by function and T cell receptor type. *Eur J Immunol* **34**, 56-65.

Stetson, D. B., Mohrs, M., Reinhardt, R. L., Baron, J. L., Wang, Z. E., Gapin, L., Kronenberg, M. and Locksley, R. M. (2003). Constitutive cytokine mRNAs mark natural killer (NK) and NK T cells poised for rapid effector function. *J Exp Med* **198**, 1069-76.

Stober, D., Jomantaite, I., Schirmbeck, R. and Reimann, J. (2003). NKT cells provide help for dendritic cell-dependent priming of MHC class I-restricted CD8+ T cells in vivo. *J Immunol* **170**, 2540-8.

Sugai, M., Gonda, H., Nambu, Y., Yokota, Y. and Shimizu, A. (2004). Role of Id proteins in B lymphocyte activation: new insights from knockout mouse studies. *J Mol Med* **82**, 592-9.

Sullivan, B. M., Juedes, A., Szabo, S. J., von Herrath, M. and Glimcher, L. H. (2003). Antigen-driven effector CD8 T cell function regulated by T-bet. *Proc Natl Acad Sci U S A* **100**, 15818-23.

Swann, J., Crowe, N. Y., Hayakawa, Y., Godfrey, D. I. and Smyth, M. J. (2004). Regulation of antitumour immunity by CD1d-restricted NKT cells. *Immunol Cell Biol* **82**, 323-31.

Sykes, M. (1990). Unusual T cell populations in adult murine bone marrow. Prevalence of CD3+CD4-CD8- and alpha beta TCR+NK1.1+ cells. *J Immunol* **145**, 3209-15.

Szalay, G., Ladel, C. H., Blum, C., Brossay, L., Kronenberg, M. and Kaufmann, S. H. (1999). Cutting edge: anti-CD1 monoclonal antibody treatment reverses the production patterns of TGF-beta 2 and Th1 cytokines and ameliorates listeriosis in mice. *J Immunol* **162**, 6955-8.

Tahara-Hanaoka, S., Miyamoto, A., Hara, A., Honda, S., Shibuya, K. and Shibuya, A. (2005). Identification and characterization of murine DNAM-1 (CD226) and its poliovirus receptor family ligands. *Biochem Biophys Res Commun* **329**, 996-1000.

Takahashi, T., Chiba, S., Nieda, M., Azuma, T., Ishihara, S., Shibata, Y., Juji, T. and Hirai, H. (2002). Cutting edge: analysis of human V alpha 24+CD8+ NK T cells activated by alpha-galactosylceramide-pulsed monocyte-derived dendritic cells. *J Immunol* **168**, 3140-4.

Takeda, K., Seki, S., Ogasawara, K., Anzai, R., Hashimoto, W., Sugiura, K., Takahashi, M., Satoh, M. and Kumagai, K. (1996). Liver NK1.1+ CD4+ alpha beta T cells activated by IL-12 as a major effector in inhibition of experimental tumor metastasis. *J Immunol* **156**, 3366-73.

Teige, A., Teige, I., Lavasani, S., Bockermann, R., Mondoc, E., Holmdahl, R. and Issazadeh-Navikas, S. (2004). CD1-dependent regulation of chronic central nervous system inflammation in experimental autoimmune encephalomyelitis. *J Immunol* **172**, 186-94.

Terabe, M., Matsui, S., Noben-Trauth, N., Chen, H., Watson, C., Donaldson, D. D., Carbone, D. P., Paul, W. E. and Berzofsky, J. A. (2000). NKT cell-mediated repression of tumor immunosurveillance by IL-13 and the IL-4R-STAT6 pathway. *Nat Immunol* **1**, 515-20.

Terabe, M., Swann, J., Ambrosino, E., Sinha, P., Takaku, S., Hayakawa, Y., Godfrey, D. I., Ostrand-Rosenberg, S., Smyth, M. J. and Berzofsky, J. A. (2005). A nonclassical non-Valpha14Jalpha18 CD1d-restricted (type II) NKT cell is sufficient for down-regulation of tumor immunosurveillance. *J Exp Med* **202**, 1627-33.

Townsend, M. J., Weinmann, A. S., Matsuda, J. L., Salomon, R., Farnham, P. J., Biron, C. A., Gapin, L. and Glimcher, L. H. (2004). T-bet regulates the terminal maturation and homeostasis of NK and Valpha14i NKT cells. *Immunity* **20**, 477-94.

Walunas, T. L., Wang, B., Wang, C. R. and Leiden, J. M. (2000). Cutting edge: the Ets1 transcription factor is required for the development of NK T cells in mice. *J Immunol* **164**, 2857-60.

van der Vliet, H. J., Nishi, N., Koezuka, Y., von Blomberg, B. M., van den Eertwegh, A. J., Porcelli, S. A., Pinedo, H. M., Scheper, R. J. and Giaccone, G. (2001). Potent expansion of human natural killer T cells using alpha-galactosylceramide (KRN7000)-loaded monocyte-derived dendritic cells, cultured in the presence of IL-7 and IL-15. *J Immunol Methods* **247**, 61-72.

Wang, Y., Goldschneider, I., O'Rourke, J. and Cone, R. E. (2001). Blood mononuclear cells induce regulatory NK T thymocytes in anterior chamber-associated immune deviation. *J Leukoc Biol* **69**, 741-6.

Vassiloyanakopoulos, A. P., Okamoto, S. and Fierer, J. (1998). The crucial role of polymorphonuclear leukocytes in resistance to Salmonella dublin infections in genetically susceptible and resistant mice. *Proc Natl Acad Sci U S A* **95**, 7676-81.

Wesley, J. D., Robbins, S. H., Sidobre, S., Kronenberg, M., Terrizzi, S. and Brossay, L. (2005). Cutting edge: IFN-gamma signaling to macrophages is required for optimal Valpha14i NK T/NK cell cross-talk. *J Immunol* **174**, 3864-8.

Williams, K. L., Zullo, A. J., Kaplan, M. H., Brutkiewicz, R. R., Deppmann, C. D., Vinson, C. and Taparowsky, E. J. (2003). BATF transgenic mice reveal a role for activator protein-1 in NKT cell development. *J Immunol* **170**, 2417-26.

Wilson, A., Held, W. and MacDonald, H. R. (1994). Two waves of recombinase gene expression in developing thymocytes. *J Exp Med* **179**, 1355-60.

Wilson, M. T., Johansson, C., Olivares-Villagomez, D., Singh, A. K., Stanic, A. K., Wang, C. R., Joyce, S., Wick, M. J. and Van Kaer, L. (2003). The response of natural killer T cells to glycolipid antigens is characterized by surface receptor down-modulation and expansion. *Proc Natl Acad Sci U S A* **100**, 10913-8.

Wilson, S. B. and Byrne, M. C. (2001). Gene expression in NKT cells: defining a functionally distinct CD1d-restricted T cell subset. *Curr Opin Immunol* **13**, 555-61.

Wilson, S. B., Kent, S. C., Horton, H. F., Hill, A. A., Bollyky, P. L., Hafler, D. A., Strominger, J. L. and Byrne, M. C. (2000). Multiple differences in gene expression in regulatory Valpha 24Jalpha Q T cells from identical twins discordant for type I diabetes. *Proc Natl Acad Sci U S A* **97**, 7411-6.

Wu, D., Xing, G. W., Poles, M. A., Horowitz, A., Kinjo, Y., Sullivan, B., Bodmer-Narkevitch, V., Plettenburg, O., Kronenberg, M., Tsuji, M. et al. (2005). Bacterial glycolipids and analogs as antigens for CD1d-restricted NKT cells. *Proc Natl Acad Sci U S A* **102**, 1351-6.

Wu, D. Y., Segal, N. H., Sidobre, S., Kronenberg, M. and Chapman, P. B. (2003). Cross-presentation of disialoganglioside GD3 to natural killer T cells. *J Exp Med* **198**, 173-81.

Yamagata, T., Benoist, C. and Mathis, D. (2006). A shared gene-expression signature in innate-like lymphocytes. *Immunol Rev* **210**, 52-66.

Yamagata, T., Mathis, D. and Benoist, C. (2004). Self-reactivity in thymic double-positive cells commits cells to a CD8 alpha alpha lineage with characteristics of innate immune cells. *Nat Immunol* **5**, 597-605.

Yamaguchi, A., Koda, T., Abe, H., Sato, M., Li, J., Sakai, T., Togashi, Y., Shinohara, Y., Ikeda, H. and Nishimura, T. (2005). Development of a functional cDNA array for evaluation of the Th1/Th2 balance. *Immunol Lett* **101**, 95-103.

Yankelevich, B., Knobloch, C., Nowicki, M. and Dennert, G. (1989). A novel cell type responsible for marrow graft rejection in mice. T cells with NK phenotype cause acute rejection of marrow grafts. *J Immunol* **142**, 3423-30.

Yoshimoto, T., Bendelac, A., Hu-Li, J. and Paul, W. E. (1995). Defective IgE production by SJL mice is linked to the absence of CD4+, NK1.1+ T cells that promptly produce interleukin 4. *Proc Natl Acad Sci U S A* **92**, 11931-4.

Yoshimoto, T. and Paul, W. E. (1994). CD4pos, NK1.1pos T cells promptly produce interleukin 4 in response to in vivo challenge with anti-CD3. *J Exp Med* **179**, 1285-95.

Yrlid, U. and Wick, M. J. (2000). Salmonella-induced apoptosis of infected macrophages results in presentation of a bacteria-encoded antigen after uptake by bystander dendritic cells. *J Exp Med* **191**, 613-24.

Zeng, D., Dick, M., Cheng, L., Amano, M., Dejbakhsh-Jones, S., Huie, P., Sibley, R. and Strober, S. (1998). Subsets of transgenic T cells that recognize CD1 induce or prevent murine lupus: role of cytokines. *J Exp Med* **187**, 525-36.

Zhou, D., Cantu, C., 3rd, Sagiv, Y., Schrantz, N., Kulkarni, A. B., Qi, X., Mahuran, D. J., Morales, C. R., Grabowski, G. A., Benlagha, K. et al. (2004a). Editing of CD1d-bound lipid antigens by endosomal lipid transfer proteins. *Science* **303**, 523-7.

Zhou, D., Mattner, J., Cantu, C., 3rd, Schrantz, N., Yin, N., Gao, Y., Sagiv, Y., Hudspeth, K., Wu, Y. P., Yamashita, T. et al. (2004b). Lysosomal glycosphingolipid recognition by NKT cells. *Science* **306**, 1786-9.

Zlotnik, A., Godfrey, D. I., Fischer, M. and Suda, T. (1992). Cytokine production by mature and immature CD4-CD8- T cells. Alpha beta-T cell receptor+ CD4-CD8- T cells produce IL-4. *J Immunol* **149**, 1211-5.

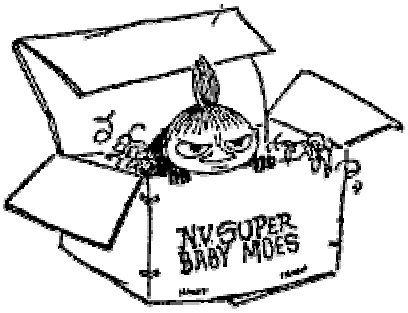

THE END

IS THE BEGINNING OF SOMETHING NEW