LUND UNIVERSITY

Quadratic Optimization of Motion Coordination and Control

Johansson, Rolf

1989

Document Version:
Publisher's PDF, also known as Version of record

Link to publication

Citation for published version (APA):
Johansson, R. (1989). *Quadratic Optimization of Motion Coordination and Control*. (Technical Reports TFRT-7425). Department of Automatic Control, Lund Institute of Technology (LTH).

Total number of authors:
1

General rights
Unless other specific re-use rights are stated the following general rights apply:
Copyright and moral rights for the publications made accessible in the public portal are retained by the authors and/or other copyright owners and it is a condition of accessing publications that users recognise and abide by the legal requirements associated with these rights.
• Users may download and print one copy of any publication from the public portal for the purpose of private study or research.
• You may not further distribute the material or use it for any profit-making activity or commercial gain
• You may freely distribute the URL identifying the publication in the public portal

Read more about Creative commons licenses: https://creativecommons.org/licenses/

Take down policy
If you believe that this document breaches copyright please contact us providing details, and we will remove access to the work immediately and investigate your claim.

LUND UNIVERSITY

PO Box 117
221 00 Lund
+46 46-222 00 00

CODEN: LUTFD2/(TFRT-7425)/1–28/(1989)

Quadratic Optimization of Motion Coordination and Control

Rolf Johansson

Department of Automatic Control
Lund Institute of Technology
June 1989

Department of Automatic Control
Lund Institute of Technology
P.O. Box 118
S-221 00 Lund Sweden

Document name
REPORT

Date of issue
June 1989

Document Number
CODEN:LUTFD2/(TFRT-7425)/1-28/(1989)

Author(s)
Rolf Johansson

Supervisor

Sponsoring organisation

Title and subtitle
Quadratic Optimization of Motion Coordination and Control

Abstract

This paper presents algorithms for continuous-time quadratic optimization of motion control. Explicit solutions to the Hamilton-Jacobi equation for optimal control of rigid-body motion is found by solving an algebraic matrix equation. The stability is investigated Lyapunov function theory and it is shown that global asymptotic stability holds. It is also shown how optimal control and adaptive control may act in concert in the case of unknown or uncertain system parameters. The solution results in natural design parameters on the form of square weighting matrices as known from linear quadratic optimal control. The proposed optimal control is useful for trajectory planning, motion control as well as for motion analysis.

Key words
Optimal control, Lyapunov function, Motion control, Hamilton-Jacobi equation, Self-optimization, Machine learning.

Classification system and/or index terms (if any)

Supplementary bibliographical information

ISSN and key title

ISBN

Language
English

Number of pages
28

Recipient's notes

Security classification

The report may be ordered from the Department of Automatic Control or borrowed through the University Library 2, Box 1010, S-221 03 Lund, Sweden, Telex: 33248 lubbis lund.

Mathematical Notations

Coordinates

q	Generalized position coordinates	$q \in R^n$
$\dot{q}$	Generalized velocity coordinates	$\dot{q} \in R^n$
q_r	Reference value for position	$q_r \in R^n$
$\tilde{q}$	Position error $\tilde{q} = q - q_r$	$\tilde{q} \in R^n$
$x(t)$	State of motion $x = \begin{pmatrix} \dot{q}^T & q^T \end{pmatrix}^T$	$x \in R^{2n}$
$\tilde{x}(t)$	Error state of motion $\tilde{x} = \begin{pmatrix} \dot{\tilde{q}}^T & \tilde{q}^T \end{pmatrix}^T$	$\tilde{x} \in R^{2n}$
$x_r(t)$	Reference state of motion $x_r = \begin{pmatrix} \dot{q}_r^T & q_r^T \end{pmatrix}^T$	$x_r \in R^{2n}$

Torques, forces, inertias

τ	Applied torques or forces	$\tau \in R^n$
$M(q)$	Moment of inertia $\quad M(q) = M^T(q) > 0$	$M \in R^{n \times n}$
$C(q,\dot{q})\dot{q}$	Coriolis, centripetal and frictional forces	$C \in R^{n \times n}$
$G(q)$	Gravitational forces	$G \in R^{n \times n}$
u	Control variable $u = M(q)T_1\dot{\tilde{x}} + \frac{1}{2}\dot{M}(q,\dot{q})T_1\tilde{x}$	$u \in R^n$

Energy functions

$\mathcal{L}$	Lagrangian of mechanical motion
L	Lagrangian of optimization
$\mathcal{H}$	Hamiltonian of mechanical motion
H	Hamiltonian of optimization
$\mathcal{U}(q)$	Potential energy
$\mathcal{T}(q,\dot{q})$	Kinetic energy
$V(\tilde{x},t)$	Hamilton principal function of optimization
$V_X(\tilde{X},t)$	Lyapunov function of control and adaptation
$J(u)$	Optimization criterion

Matrices

Q	Optimization weighting matrix w.r.t. x	$Q \in R^{2n \times 2n}$
R	Optimization weighting matrix w.r.t. u	$R \in R^{n \times n}$
S	Optimization cross weighting matrix w.r.t. x, u	$S \in R^{n \times 2n}$
T_0	State transformation matrix	$T_0 \in R^{2n \times 2n}$
T_1, T_2	State transformation matrices	$T_1, T_2 \in R^{n \times n}$
T_{11}, T_{12}	State transformation matrices	$T_{11}, T_{12} \in R^{n \times n}$
U	State transformation matrix	$U \in R^{2n \times 2n}$

Adaptive control

θ	Vector of unknown parameters	$\theta \in R^p$
ψ	Regression matrix	$\psi \in R^{n \times p}$
$\tilde{X}(t)$	Error state of motion $\tilde{X} = \begin{pmatrix} \dot{\tilde{q}}^T & \tilde{q}^T & \tilde{\theta} \end{pmatrix}^T$	$\tilde{X} \in R^{2n+p}$

Introduction

A purpose of motion control is to maintain a prescribed motion for the control object by applying compensating corrective torques or forces. Motion controlled systems intended for autonomous operation need optimization as well as an ability of adaptation to new and rapidly changing operating conditions. The optimality of such control design is therefore meaningful to consider. Linear optimal control based on linearized equations of motion is a standard approach to solve such problems.

Nonlinear dynamics with motion constraints and rapidly changing operating conditions sometimes make such control problems difficult. The rigid body mechanics of flight control or robot manipulator motion is often formulated with the general equations obtained from Lagrangian mechanics (time arguments omitted).

$$M(q)\ddot{q} + C(q,\dot{q})\dot{q} + G(q) = \tau; \qquad M(q) = M^T(q) > 0 \tag{1}$$

The position coordinates $q \in R^n$ with associated velocities $\dot{q}$ and accelerations $\ddot{q}$ are controlled with the driving torques $\tau \in R^n$. The (generalised) moment of inertia $M(q)$, the coriolis, centripetal and frictional forces $C(q,\dot{q})\dot{q}$, and the gravitational forces $G(q)$ all vary along the trajectories.

The control problem is as follows: Find the torques (forces) τ so that the control object follows a trajectory provided that equations (1) of the rigid body mechanics are known. From the standpoint of linear quadratic control theory it is natural to include the torques (forces) in the performance index. Attempts to design linear quadratic control however often fail due to the position-dependent, nonlinear behavior of (1).

Both optimal control and adaptive control are relevant in this context. Various adaptive control algorithms were early proposed in robotics by TOMIZUKA *et al* [28]. DUBOWSKY AND DESFORGES [6] proposed an adaptive control that adjusts feedback gains to follow a reference model. KOIVO AND GUO [18] used an autoregressive model to fit data. Both assumed that the interaction forces among the joints are negligible. Recently, several authors [4], [17], [27], have proposed adaptive control solutions which take the nonlinear actions into account.

Linear optimal control solutions are standard and rely on linearized equations around an operating point. SARIDIS AND LEE [25] made early work on self-optimizing control in robotics. Apart from such approximate solutions there are also approaches with suboptimal solutions based on the nonlinear equations. LEE AND CHEN [20] proposed a suboptimal nonlinear control design based on quasi-linearization and linear optimal control. Discrete-time adaptive control based on linearized dynamics around preplanned trajectories was proposed by LEE AND CHUNG [21].

'Exact linearization' of nonlinear systems as a method for control design has lately attracted considerable interest in application areas such as flight control [13] and robotics [8], [19], [23] ('computed torque') as well as in theory [14], [24]. The idea is to use state feedback to make exact cancellation of nonlinear terms and factors followed by optimal control design for the simplified system.

Problem statement

There are two natural choices of control variable for computation of optimal motion control. One approach is based on minimization of local accelerations, velocities, and positions. A solution of the linear quadratic control problem provides the optimal accelerations and the corresponding torques can be calculated with the 'exact linearization' or 'computed torque' method. This optimization is based on linear system dynamics with double integrator action and does not include the nonlinear dynamics of (1). Thus, the control

optimization is not made with respect to the applied torques.

However, optimization criteria with penalties on the torques rather than accelerations lead to complicated trajectory dependent mathematical problems. Methods hitherto presented in the literature generally require cumbersome trajectory dependent numerical or approximate solutions [20], [25], [29].

To the author's knowledge there exists no analytic solution to the quadratic control problem of motion described by equations of Lagrangian mechanics. It is the purpose of this paper to present stable, analytic solutions to the problem of quadratic optimal control of motion control with minimization of the applied torques (forces) when velocity and position measurements are available. We use an optimal control approach to solve a Hamilton-Jacobi equation and present feedback solutions to the stated optimal motion control problem. We reduce the given problem into two separate problems:

- Explicit solution of an optimal tracking problem with the Hamilton-Jacobi equation
- Adaptive control

The solution offers:

- Optimization of a performance index
- Stability
- Trajectory planning

We will thus achieve separated solutions of optimality and adaptation. The solution should be of interest for robot manipulator control, biomechanics, flight control and other branches of applied mechanics.

Rigid body dynamics

We model the motion dynamics as a set of n rigid bodies connected and described by a set of generalized coordinates $q \in R^n$. The derivation of the motion equations (1) by methods of Lagrange theory [2], [9] involves the explicit expressions of kinetic energy $\mathcal{T}$ and potential energy $\mathcal{U}$ to form the Euler-Lagrange equations of motion

$$\frac{d}{dt}(\frac{\partial \mathcal{L}}{\partial \dot{q}}) - \frac{\partial \mathcal{L}}{\partial q} = \tau; \qquad \mathcal{L} = \mathcal{T} - \mathcal{U} \tag{2}$$

where τ are the externally applied torques and forces. The Lagrangian $\mathcal{L}$ of robot motion

in a space with a velocity independent gravitation potential is

$$\mathcal{L}(q,\dot{q}) = \mathcal{T}(q,\dot{q}) - \mathcal{U}(q) = \frac{1}{2}\dot{q}^T M(q)\dot{q} - \mathcal{U}(q) \tag{3}$$

The standard general equations (1) are obtained from (3) as

$$M(q)\ddot{q} + C(q,\dot{q})\dot{q} + G(q) = \tau \tag{1}$$

It is assumed that the positions q and velocities $\dot{q}$ but not the accelerations $\ddot{q}$ are available for measurement. It is further assumed that the torque vector τ is available as the control input. It is assumed that the matrices M, C, G have a known structure and contain constant parameters.

Control objective

The desired reference trajectory for the control object to follow is assumed available as bounded functions of time in terms of generalized positions $q_r \in \mathcal{C}^1$ and its corresponding accelerations $\ddot{q}_r$ and velocities $\dot{q}_r$. The variables $\ddot{q}_r$, $\dot{q}_r$, q_r may be conveniently generated with some bounded reference signal r and a reference model of the type

$$\ddot{q}_r + K_d\dot{q}_r + K_p q_r = K_r r \qquad r, q_r \in R^n \tag{4}$$

The dynamic system (4) with the $n \times n$-matrices K_d, K_p, K_r need be stable. Define the errors of accelerations, velocities, and positions as

$$\begin{pmatrix} \ddot{\tilde{q}} \\ \dot{\tilde{q}} \\ \tilde{q} \end{pmatrix} = \begin{pmatrix} \ddot{q} - \ddot{q}_r \\ \dot{q} - \dot{q}_r \\ q - q_r \end{pmatrix}; \qquad \tilde{x} = x - x_r = \begin{pmatrix} \dot{q} - \dot{q}_r \\ q - q_r \end{pmatrix} \tag{5}$$

The control objective is to follow a given, bounded reference trajectory $\dot{q}_r, q_r$ without position errors $\tilde{q}$, or velocity errors $\dot{\tilde{q}}$.

A state space description

The full error state space representation is found as

$$\tilde{x}(t) = \begin{pmatrix} \dot{\tilde{q}}^T(t) & \tilde{q}^T(t) \end{pmatrix}^T; \qquad \tilde{x} \in R^{2n} \tag{6}$$

The error dynamics of the manipulator may be obtained from (1), (4), and (6) as a state space description where the derivative of $\tilde{x}$ is

$$\dot{\tilde{x}}(t) = \begin{pmatrix} \ddot{\tilde{q}}(t) \\ \dot{\tilde{q}}(t) \end{pmatrix} = \begin{pmatrix} -M^{-1}(q)C(q,\dot{q}) & 0_{n\times n} \\ I_{n\times n} & 0_{n\times n} \end{pmatrix} \tilde{x}(t) +$$

$$+\begin{pmatrix} -\ddot{q}_r - M^{-1}(q)(G(q)+C(q,\dot{q})\dot{q}_r) \\ 0_{n\times n} \end{pmatrix} + \begin{pmatrix} I_{n\times n} \\ 0_{n\times n} \end{pmatrix} M^{-1}(q)\tau \tag{7}$$

or with shorter notation

$$\dot{\tilde{x}}(t) = A(q,\dot{q})\tilde{x}(t) + B_0(\ddot{q}_r,\dot{q}_r,\dot{q},q) + BM^{-1}(q)\tau \tag{8}$$

where τ is available for assignment of the control law.

What control effort should be minimized?

A natural aim is to minimize velocity and position errors (state errors) with a minimum of the applied torques as well as the energy consumtion. The Euler-Lagrange equations give for a velocity-independent potential energy $\mathcal{U}$

$$\frac{d}{dt}(\frac{\partial \mathcal{T}}{\partial \dot{q}}) - \frac{\partial \mathcal{T}}{\partial q} + \frac{\partial \mathcal{U}}{\partial q} = \tau \tag{9}$$

Changes in potential energy due to gravitation are inevitable and can be determined from the start and end points only. It is therefore not very meaningful to make optimization with respect to gravitation-dependent torques or forces. Consider therefore the applied torques τ_k that selectively affect the kinetic energy.

$$\tau_k = \tau - \frac{\partial \mathcal{U}}{\partial q} = \frac{d}{dt}(\frac{\partial \mathcal{T}}{\partial \dot{q}}) - \frac{\partial \mathcal{T}}{\partial q} = M(q)\ddot{q} + \frac{1}{2}\dot{M}(q,\dot{q})\dot{q} = \begin{pmatrix} M(q), & \frac{1}{2}\dot{M}(q,\dot{q}) \end{pmatrix} \dot{x} \tag{10}$$

For minimization we embed this choice of control variable in the more general definition

$$u = \begin{pmatrix} M(q), & \frac{1}{2}\dot{M}(q,\dot{q}) \end{pmatrix} \begin{pmatrix} \dot{\tilde{z}}_1 \\ \tilde{z}_1 \end{pmatrix} = M(q)T_1\dot{\tilde{x}} + \frac{1}{2}\dot{M}(q,\dot{q})T_1\tilde{x} \tag{11}$$

with $\tilde{z}$ and T_1 introduced via the following state-space transformation of $\tilde{x}$

$$\tilde{z} = \begin{pmatrix} \tilde{z}_1 \\ -- \\ \tilde{z}_2 \end{pmatrix} = T_0\tilde{x} = \begin{pmatrix} T_1 \\ -- \\ T_2 \end{pmatrix} \begin{pmatrix} \dot{\tilde{q}} \\ \tilde{q} \end{pmatrix} = \begin{pmatrix} T_{11} & T_{12} \\ 0 & I_{n\times n} \end{pmatrix} \begin{pmatrix} \dot{\tilde{q}} \\ \tilde{q} \end{pmatrix}; \qquad T_{11}, T_{12} \in R^{n\times n} \tag{12}$$

This definition includes torques affecting kinetic energy (10), reference trajectories (5), and a state space transformation (12). The control variable u of (11) specializes to τ_k of (10) for $q_r = 0$, $T_{11} = I_{n\times n}$, and $T_{12} = 0$. The equations of motion (7) from u to $\tilde{x}$ are then

$$\frac{d\tilde{x}}{dt} = A_1(q,\dot{q})\tilde{x} + B_1(q)u$$

with

$$\dot{\tilde{x}} = T_0^{-1} \begin{pmatrix} -\frac{1}{2}M(q)^{-1}\dot{M}(q,\dot{q}) & 0_{n\times n} \\ T_{11}^{-1} & -T_{11}^{-1}T_{12} \end{pmatrix} T_0\tilde{x} + T_0^{-1} \begin{pmatrix} M(q)^{-1} \\ 0_{n\times n} \end{pmatrix} u$$

and

$$B_1(q) = T_0^{-1} B M(q)^{-1} \tag{13}$$

A quadratic optimization problem

We embed the motion control problem into the following somewhat more general optimization problem. The assumptions made are summarized as follows:

Basic assumptions

A1: The motion equations are $M(q)\ddot{q} + C(\dot{q},q)\dot{q} + G(q) = \tau$ with coordinates q and external torques (forces) τ.

A2: Reference trajectory given as $q_r, \dot{q}_r, \ddot{q}_r$ with the error-state $\tilde{x} = \begin{pmatrix} \dot{\tilde{q}}^T & \tilde{q}^T \end{pmatrix}$

A3: A state-space transformation

$$\tilde{z} = T_0\tilde{x} = \begin{pmatrix} T_{11} & T_{12} \\ 0_{n\times n} & I_{n\times n} \end{pmatrix} \tilde{x}$$

A4: The control action to minimize is

$$u = \frac{1}{2}\dot{M}(q,\dot{q})B^T T_0\tilde{x} + M(q)B^T T_0\dot{\tilde{x}}; \qquad B = \begin{pmatrix} I_{n\times n} \\ 0_{n\times n} \end{pmatrix} \tag{14}$$

A5: Positions and velocities of rigid body motion are available for measurement

A6: Known structure of M, C, G

A7: Known parameters of M, C, G

□

To derive an optimal feedback, the control problem is formulated as a quadratic optimization problem with a performance index $J(u)$ subject to assumptions (A1-7)

$$J(u) = \int_{t_0}^{\infty} L(\tilde{x}, u)dt \tag{15}$$

with the Lagrangian

$$L(\tilde{x},u) = \frac{1}{2}\tilde{x}^T(t)Q\tilde{x}(t) + \frac{1}{2}u^T(t)Ru(t) = \frac{1}{2}\begin{pmatrix} \dot{\tilde{q}}^T & \tilde{q}^T \end{pmatrix} \begin{pmatrix} Q_{11} & Q_{12} \\ Q_{12}^T & Q_{22} \end{pmatrix} \begin{pmatrix} \dot{\tilde{q}} \\ \tilde{q} \end{pmatrix} + \frac{1}{2}u^T R u \tag{16}$$

Given the performance index $J(u)$, we find an optimal control $u = u^*$ that will transfer from an initial state to a desired state. The control $u = u^*$ moves the system from an arbitrary initial state $\tilde{x}(t_0)$ to the origin of the error-space while minimizing $J(u)$. The control variable u is weighted with the matrix $R = R^T > 0$ and the vector of velocity and position errors $\tilde{x}$ is weighted with the matrix $Q = Q^T > 0$. The rate of compensation can be adjusted by chosing proper weights Q. The term $u^T R u$ guarantees smoothness of operation.

The Hamilton-Jacobi equation

Define the Hamiltonian of optimization as

$$H(\tilde{x}, u, \frac{\partial V(\tilde{x},t)}{\partial \tilde{x}}) = (\frac{\partial V(\tilde{x},t)}{\partial \tilde{x}})^T \dot{\tilde{x}} + L(\tilde{x}, u) \tag{17}$$

where V solves the partial differential equation

$$-\frac{\partial V(\tilde{x},t)}{\partial t} = (\frac{\partial V(\tilde{x},t)}{\partial \tilde{x}})^T \dot{\tilde{x}} + L(\tilde{x}, u) \tag{18}$$

A necessary and sufficient condition for optimality [7], [22], is to choose a value function V that satisfies the Hamilton-Jacobi equation.

$$\frac{\partial V}{\partial t} + \min_u H(\tilde{x}, u, \frac{\partial V}{\partial \tilde{x}}) = 0 \tag{19}$$

This minimum is attained for the optimal control $u = u^*$ and the Hamiltonian

$$H^* = \min_u H = \min_u((\frac{\partial V}{\partial \tilde{x}})^T \dot{\tilde{x}} + L(\tilde{x}, u)) = H(\tilde{x}, u^*, \frac{\partial V(\tilde{x},t)}{\partial \tilde{x}}) = -\frac{\partial V(\tilde{x},t)}{\partial t} \tag{20}$$

The optimal value function V that solves (19) for $u = u^*$ is the *Hamilton's principal function* [9] of the system.

LEMMA 1:

The following function V composed of $\tilde{x}$, $q_r(t)$, T_0, M, and a symmetric matrix $K \in R^{n \times n}$ solves the Hamilton-Jacobi equation and is a *Hamilton's principal function* for the optimization problem (15-16) under assumptions (A1-7).

$$V(\tilde{x}(t), t) = \frac{1}{2} \tilde{x}^T T_0^T \begin{pmatrix} M(q) & 0 \\ 0 & K \end{pmatrix} T_0 \tilde{x} \tag{21}$$

for K, T_0 solving the algebraic matrix equation

$$\tilde{x}^T \left(\begin{pmatrix} 0 & K \\ K & 0 \end{pmatrix} + Q - T_0^T B R^{-1} B^T T_0 \right) \tilde{x} = 0 \tag{22}$$

The optimal feedback control law $u = u^*$ that minimizes J is

$$u^*(t) = -R^{-1} B^T T_0 \tilde{x}(t) \tag{23}$$

□

PROOF: See appendix 1. □

REMARK:

The matrix solution K of (21) is not unique. Another solution to (22) may be obtained by adding any $n \times n$ skewsymmetric matrix to K. □

All optimal control generated by the solution (21-23) to the Hamilton-Jacobi equation do not necessarily guarantee stable closed-loop behavior. Only solutions that also guarantee a stable closed-loop behavior are interesting for control design purposes. Sufficient conditions for stable, optimal control requires that $K = K^T > 0$ as formulated in the following theorem:

THEOREM 1:

Let the weighting matrices Q, R with Cholesky factors Q_1, Q_2, R be chosen such that

$$Q = Q^T = \begin{pmatrix} Q_{11} & Q_{12} \\ Q_{12}^T & Q_{22} \end{pmatrix} = \begin{pmatrix} Q_1^T Q_1 & Q_{12} \\ Q_{12}^T & Q_2^T Q_2 \end{pmatrix}; \qquad Q_1^T Q_2 + Q_2^T Q_1 - (Q_{12}^T + Q_{12}) > 0$$

$$R = R^T = R_1^T R_1 > 0 \tag{24}$$

Let T_0, K be chosen as the matrices

$$T_0 = \begin{pmatrix} T_{11} & T_{12} \\ 0 & I_{n\times n} \end{pmatrix} = \begin{pmatrix} R_1^T Q_1 & R_1^T Q_2 \\ 0 & I_{n\times n} \end{pmatrix}$$

$$K = K^T = \frac{1}{2}(Q_1^T Q_2 + Q_2^T Q_1) - \frac{1}{2}(Q_{12}^T + Q_{12}) > 0 \tag{25}$$

The optimal control solution of (15) subject to assumptions (A1-7) then gives a L^2-stable closed-loop system with the optimal feedback control law $u = u^*$

$$u^*(t) = -R^{-1} B^T T_0 \tilde{x}(t) \tag{26}$$

The minimal optimization criterion is then obtained as

$$J(u^*) = \min_u \int_{t_0}^{\infty} L(\tilde{x}, u)dt = \int_{t_0}^{\infty} L(\tilde{x}, u^*)dt = V(\tilde{x}(t_0), t_0) \tag{27}$$

where V solves the Hamilton-Jacobi equation (19)

$$V(\tilde{x}(t), t) = \frac{1}{2}\tilde{x}^T T_0^T \begin{pmatrix} M(q) & 0 \\ 0 & K \end{pmatrix} T_0 \tilde{x} \tag{28}$$

□

PROOF: See appendix 2. □

REMARK:

Consider an optimization criterion J_1 where the matrix S is used for weighting of the cross term between $\tilde{x}$ and u.

$$J_1(u) = \int_0^{\infty} L(\tilde{x}, u)dt; \qquad L_1(\tilde{x}, u) = \frac{1}{2}\tilde{x}^T(t)Q\tilde{x}(t) + \frac{1}{2}u^T(t)Ru(t) + u^T(t)S\tilde{x}(t) \tag{29}$$

The Lagrangian of (29) can be brought to a form (30) similar to (15-16) provided that the symmetric matrix $Q - S^T R^{-1} S > 0$.

$$L_1(\tilde{x}, u) = \frac{1}{2}(u(t) + R^{-1}S\tilde{x}(t))^T R(u(t) + R^{-1}S\tilde{x}(t)) + \frac{1}{2}\tilde{x}^T(t)(Q - S^T R^{-1} S)\tilde{x}(t) \tag{30}$$

The optimal feedback control law $u = u^*$ that minimizes J_1 is

$$u^*(t) = -R^{-1}(S + B^T T_0)\tilde{x}(t) \tag{31}$$

for K, T_0 solving the algebraic matrix equation

$$\left(\begin{pmatrix} 0 & K^T \\ K & 0 \end{pmatrix} + Q - (S + B^T T_0)^T R^{-1}(S + B^T T_0) \right) = 0 \tag{32}$$

This follows with the same arguments as in the proof of lemma 1. □

Asymptotic stability

The function $V(\tilde{x}, t)$ of (28) can be viewed as a sum of a kinetic energy and a potential energy from a set of springs with a stiffness matrix K. The controlled motion keeps stable with an equilibrium on the prescribed reference trajectory as long as V does not grow. This physical analogy can be formalized in a stability proof as follows:

THEOREM 2:

The function V of (28) is a Lyapunov function for the system controlled with the optimal control (26) under assumptions (A1-7).

$$V(\tilde{x}(t), t) = \frac{1}{2}\tilde{x}^T T_0^T \begin{pmatrix} M(q) & 0 \\ 0 & K \end{pmatrix} T_0 \tilde{x}$$

The Lyapunov function derivative $\dot{V} = dV/dt < 0$ for $\|\tilde{x}\| \neq 0$ and global asymptotic stability holds for $Q > 0, R > 0$. □

PROOF:

The quadratic function $V(\tilde{x}, t)$ is a suitable Lyapunov function candidate because it is positive, radially growing with $\|\tilde{x}\|$. It is continuous and has a unique minimum at the origin of the error-space. It remains to show that $\dot{V} < 0$ for all $\|\tilde{x}\| \neq 0$. From the solution of the Hamilton-Jacobi equation (18) it follows that $dV/dt + L = \partial V/\partial t + H^* = 0$ is constant for $u = u^*$ so that

$$\frac{dV(\tilde{x}, t)}{dt} = -L(\tilde{x}, u^*) = -\frac{1}{2}\tilde{x}^T(T_0^T B R^{-1} B^T T_0 + Q)\tilde{x} < 0; \qquad \forall t > 0, \tilde{x} \neq 0. \tag{33}$$

The Lyapunov function derivative (33) is negative definite and the proposition of the theorem then follows directly from the properties of Lyapunov functions, see [11]. □

The Control Law

The optimal control was given as the feedback control

$$u^*(t) = -R^{-1} B^T T_0 \tilde{x}(t) \tag{34}$$

Calculation of the appropriate external torques to apply is then obtained with the 'computed torque' method from (1), (12) and (15) as the acceleration equation

$$M(q)\ddot{\tilde{q}} = M(q) T_{11}^{-1}(M(q)^{-1} u^* - T_{12}\dot{\tilde{q}} - \frac{1}{2} M(q)^{-1} \dot{M}(q, \dot{q}) T_1 \tilde{x}) \tag{35}$$

This gives the 'optimal torque' τ^* calculated *via* assumptions (A1-7)

$$\tau^* = M(q)\left(\ddot{q}_r - T_{11}^{-1}T_{12}\dot{\tilde{q}} - T_{11}^{-1}M(q)^{-1}(\frac{1}{2}\dot{M}(q,\dot{q}) + R^{-1})B^T T_0\tilde{x}\right) + C(q,\dot{q})\dot{q} + G(q) \quad (36)$$

This control law is considerably simplified for a diagonal $T_{11} = t_{11}I_{n\times n}$, $t_{11} \in R$ which is obtained for a special choice of Q, R (and S). It is then not necessary to involve the complicated $M(q)^{-1}$ in the control law calculations.

$$\tau^* = \frac{1}{t_{11}}\left(M(q)(t_{11}\ddot{q}_r - T_{12}\dot{\tilde{q}}) - \frac{1}{2}\dot{M}(q,\dot{q})B^T T_0\tilde{x} + u^*\right) + C(q,\dot{q})\dot{q} + G(q)$$

with

$$u^* = -R^{-1}B^T T_0\tilde{x} \quad (37)$$

A further simplification of (37) to a case with $q_r \equiv 0$, $T_{12} = 0$ gives the control law u^* with the physical interpretation (10) of minimized torque.

Self-optimizing adaptation

The 'exact linearization' or 'computed torque' method (37) can be viewed as a feedforward control with respect to M, C, G and its accuracy thus relies on good knowledge of M, C, G. In cases with uncertain or time-varying parameters of M, C, G there is a need of identification and adaptation of the optimal control to the operating conditions. Adaptation of the 'exact linearization' or the 'computed torque' method is easily implemented only if accelerations are available for measurements. The presented optimal control algorithm (37), however, is straightforward to modify for self-optimizing adaptive control.

The matrices M, C, G are assumed (A6) to have a known structure but the parameters are now assumed unknown, *cf.* (A7). Let the optimal control law be expressed in terms of unknown parameters $\theta \in R^p$ of M, C, G and the data vectors $\psi \in R^{n\times p}$, $\psi_0 \in R^n$. The vectors ψ_0 contains terms of τ^* that can be computed without reference to unknown or uncertain parameters.

$$\tau^* = \frac{1}{t_{11}}\left(M(q)(t_{11}\ddot{q}_r - T_{12}\dot{\tilde{q}}) - \frac{1}{2}\dot{M}(q,\dot{q})B^T T_0\tilde{x} + u^*\right) + C(q,\dot{q})\dot{q} + G(q) = \frac{1}{t_{11}}(\psi\theta + \psi_0 + u^*) \quad (38)$$

The adaptive control law is a modification of (38) with θ replaced by an estimate $\widehat{\theta}$

$$\tau = \frac{1}{t_{11}}(\psi\widehat{\theta} + \psi_0 + u^*) = \frac{1}{t_{11}}\left(\widehat{M}(q)(t_{11}\ddot{q}_r - T_{12}\dot{\tilde{q}}) - \frac{1}{2}\widehat{\dot{M}}(q,\dot{q})B^T T_0\tilde{x} + u^*\right) + \widehat{C}(q,\dot{q})\dot{q} + \widehat{G}(q) \quad (39)$$

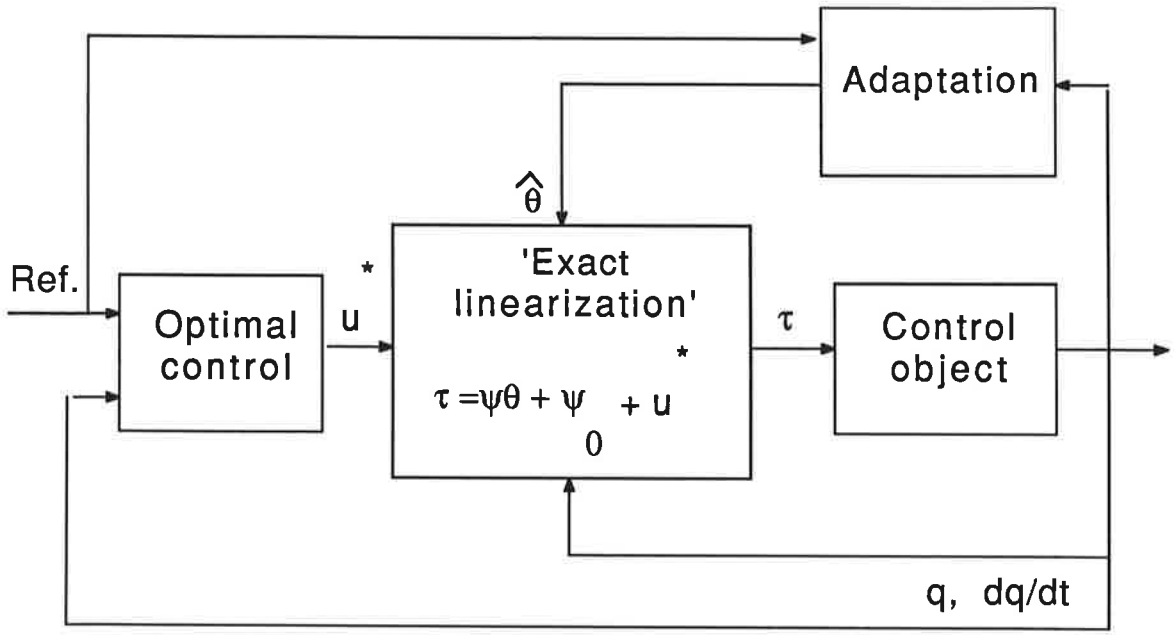

Figure 1. Organisation of optimal control and adaptation ($T_{11} = I$).

The resulting, effective control variable u in case of uncertain parameters can be computed from (38) and (39) as

$$u = u^* + \psi\tilde{\theta}; \qquad u^* = -R^{-1}B^T T_0 \tilde{x} \tag{40}$$

where $\tilde{\theta}$ denotes the vector of parameter errors $\tilde{\theta} = \hat{\theta} - \theta$. This control law is no longer optimal in the sense of (15) due to the term $\psi\tilde{\theta}$. Let the parameter error $\tilde{\theta}$ be included in a new state vector $\tilde{X}$ that suffices to describe the error dynamics.

$$\tilde{X} = \begin{pmatrix} \tilde{x} \\ \tilde{\theta} \end{pmatrix} \tag{41}$$

The following Lyapunov design of parameter adjustment can make the solution systematically tend toward the optimal solution. Introduce the following Lyapunov function candidate V_X

$$V_X(\tilde{X}, t) = V(\tilde{x}, t) + V_\theta(\tilde{\theta}) = \frac{1}{2}\tilde{x}^T T_0^T \begin{pmatrix} M(q) & 0 \\ 0 & K \end{pmatrix} T_0 \tilde{x} + \frac{1}{2}\tilde{\theta}^T K_\theta \tilde{\theta}; \qquad K_\theta = K_\theta^T > 0 \tag{42}$$

where V is the solution to the Hamilton-Jacobi equation (19) and V_θ is a quadratic functional of parameter errors. Moreover, V_X is a function of the full error state with a unique minimum at the origin of error state space. The function V_X is thus feasible as a Lyapunov function candidate for the adaptive (sub)optimal system with the derivative

$$\dot{V}_X = \dot{V} + \dot{V}_\theta = -\frac{1}{2}\tilde{x}^T(Q + T_0^T B R^{-1} B^T T_0)\tilde{x} + \tilde{x}^T T_0^T B \psi \tilde{\theta} + \tilde{\theta}^T K_\theta \dot{\tilde{\theta}} \tag{43}$$

The following adaptation law (44)

$$\dot{\widehat{\theta}} = -K_\theta^{-1}\psi^T B^T T_0 \widetilde{x} \tag{44}$$

and the control law (39) assures that $\dot{V}_X$ is equal to $\dot{V}$ of (33) for constant parameters θ.

$$\frac{dV_X(\widetilde{X},t)}{dt} = -\frac{1}{2}\widetilde{x}^T(Q + T_0^T B R^{-1} B^T T_0)\widetilde{x} \tag{45}$$

This proves that the system is globally stable (in the sense of Lyapunov) and the adaptation eventually makes the control system optimal. The adaptation thus makes the system work as a self-optimizing control system or an extremum controller. The performance degradation due to the parameter errors can be evaluated as

$$\frac{1}{2}\int_{t_0}^{\infty} \widetilde{x}^T(Q + T_0^T B R^{-1} B^T T_0)\widetilde{x}dt \leq V_X(\widetilde{X}(t_0), t_0) = J(u^*) + V_\theta(\widetilde{\theta}(t_0)) \tag{46}$$

We summarize and formalize the given statements as theorem 3.

THEOREM 3:

Assume that the optimal control u^* is determined as stated in theorem 2. Let the optimal control law be expressed in terms of unknown parameters $\theta \in R^p$ of M, C, G and the data vectors $\psi \in R^{n\times p}$, $\psi_0 \in R^n$. The vectors ψ_0 contains terms of τ^* that can be computed without reference to unknown or uncertain parameters.

$$M(q)(t_{11}\ddot{q}_r - T_{12}\dot{\widetilde{q}}) - \frac{1}{2}\dot{M}(q,\dot{q})B^T T_0 \widetilde{x} + t_{11}(C(q,\dot{q})\dot{q} + G(q)) = \psi\theta + \psi_0 \tag{47}$$

The adaptive control law with θ replaced by an estimate $\widehat{\theta} \in R^p$ is

$$\tau = \frac{1}{t_{11}}(\psi\widehat{\theta} + \psi_0 + u^*) \tag{48}$$

with the adaptation law

$$\dot{\widehat{\theta}} = -K_\theta^{-1}\psi^T B^T T_0 \widetilde{x} \tag{49}$$

The Lyapunov function V_X

$$V_X(\widetilde{X},t) = \frac{1}{2}\widetilde{x}^T T_0^T \begin{pmatrix} M(q) & 0 \\ 0 & K \end{pmatrix} T_0 \widetilde{x} + \frac{1}{2}\widetilde{\theta}^T K_\theta \widetilde{\theta}; \qquad K_\theta = K_\theta^T > 0 \tag{50}$$

with the negative semidefinite derivative

$$\dot{V}_X = \dot{V} + \dot{V}_\theta = -\frac{1}{2}\widetilde{x}^T(Q + T_0^T B R^{-1} B^T T_0)\widetilde{x} \leq 0; \qquad \forall \widetilde{X} \neq 0 \tag{51}$$

then assures that the self-optimizing adaptive (sub)optimal control solution (48-49) is L^2-stable and uniformly globally stable in the sense of Lyapunov for constant parameters θ. The solution reaches the the optimal solution for $\tilde{\theta} = 0$.

□

PROOF:

The theorem is immediately verified by application of (49) to (43) under the conditions of constant parameters θ and theorems 1, 2. The solution reaches the optimal solution for $\tilde{\theta} = 0$. The Lyapunov function derivative is negative semidefinite w.r.t. $\tilde{X}$ and negative definite w.r.t. $\tilde{x}$. □

A simulated example

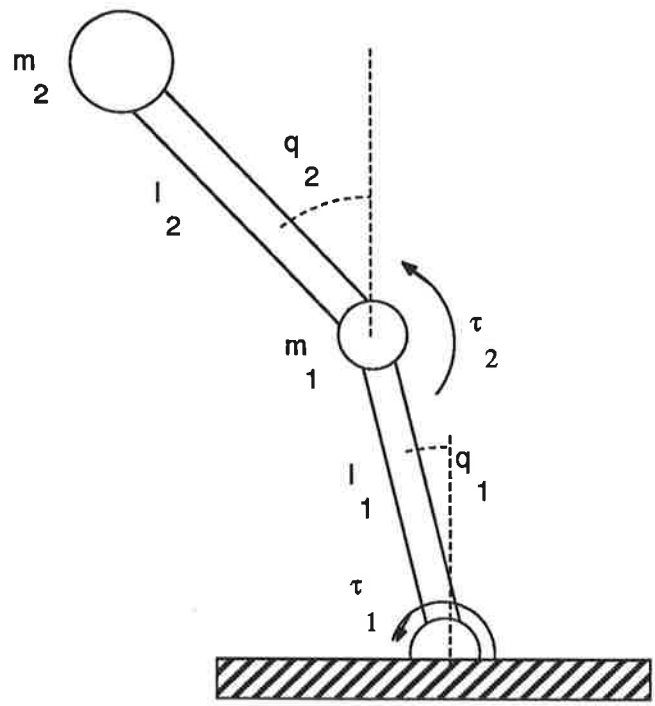

Figure 2. A two-link manipulator with masses m_1 and m_2.

We consider trajectory planning for a weight lifting operation of the two-link example in Fig. 1 with point masses m_1, m_2 [kg], lengths l_1, l_2 [m], angular positions q_1, q_2 [rad], and torques τ_1, τ_2 [Nm]. The cost functional to minimize is assumed to be:

$$J(u) = \int_0^\infty \begin{pmatrix} \dot{q}^T & q^T \end{pmatrix} Q \begin{pmatrix} \dot{q} \\ q \end{pmatrix} + u^T R u \quad dt; \qquad u = \tau - G(q) \tag{52}$$

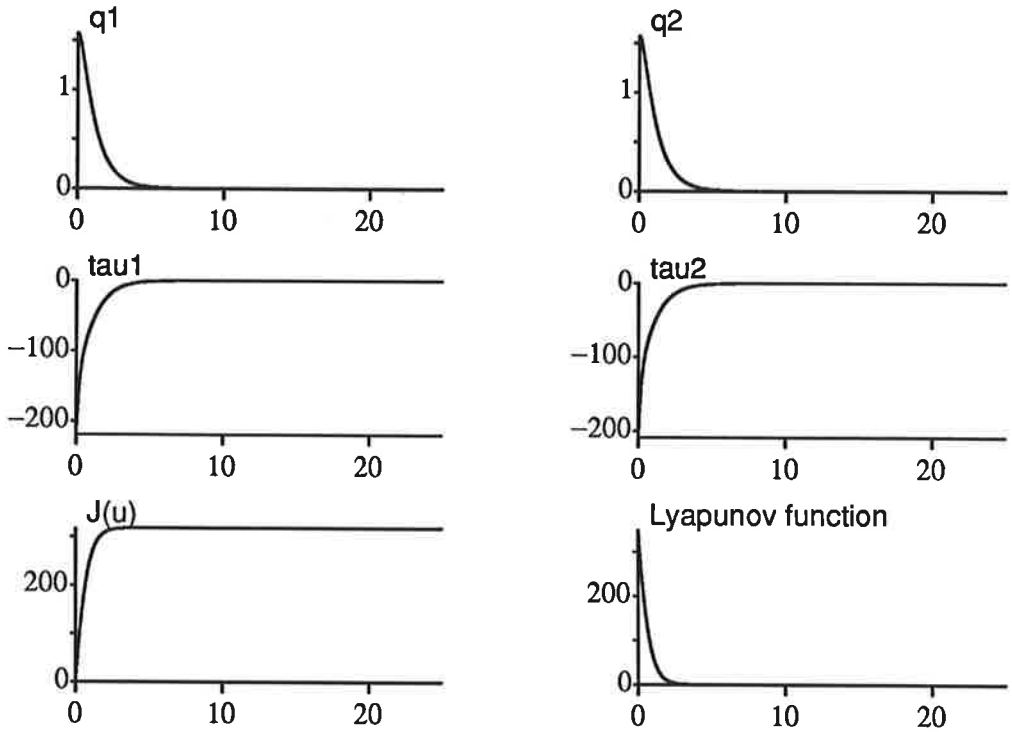

Figure 3. Simulation of the robot (55) with the optimal control law (59). Upper graphs show q_1, q_2 and middle graphs show τ_1, τ_2, respectively. Lower left graph shows the performance index $J(u)$ of (15). The lower right graph shows the Lyapunov function (28) that decreases everywhere. All graphs vs. time [s].

with $Q = 100I_{4\times4}$, and $R = 0.02I_{2\times2}$. The reference values of (4) are $\dot{q}_r = 0$, $q_r = 0$. The motion equations of Lagrangian mechanics may be derived from the kinetic and potential energies.

$$\mathcal{T}(\dot{q}, q) = \frac{1}{2}\dot{q}^T M(q)\dot{q}; \qquad \mathcal{U}(q) = (m_1 + m_2)gl_1c_1 + m_2gl_2c_2 \tag{53}$$

with

$$M(q) = \begin{pmatrix} (m_1 + m_2)l_1^2 & m_2l_1l_2(s_1s_2 + c_1c_2) \\ m_2l_1l_2(s_1s_2 + c_1c_2) & m_2l_2^2 \end{pmatrix} \tag{54}$$

with the short notation $c_2 = \cos(q_2)$, $s_1 = \sin(q_1)$, etc. The motion equations are

$$\tau = M(q)\ddot{q} + C(q, \dot{q})\dot{q} + G(q); \qquad \theta = m_2 \tag{55}$$

where

$$C(q, \dot{q}) = \frac{1}{2}\dot{M}(q, \dot{q}) = \begin{pmatrix} 0 & \frac{1}{2}m_2l_1l_2(c_1s_2 - s_1c_2)(\dot{q}_1 - \dot{q}_2) \\ \frac{1}{2}m_2l_1l_2(c_1s_2 - s_1c_2)(\dot{q}_1 - \dot{q}_2) & 0 \end{pmatrix}$$

and the gravitation

$$G(q) = \begin{pmatrix} -(m_1 + m_2)l_1gs_1 \\ -m_2l_2gs_2 \end{pmatrix} \tag{56}$$

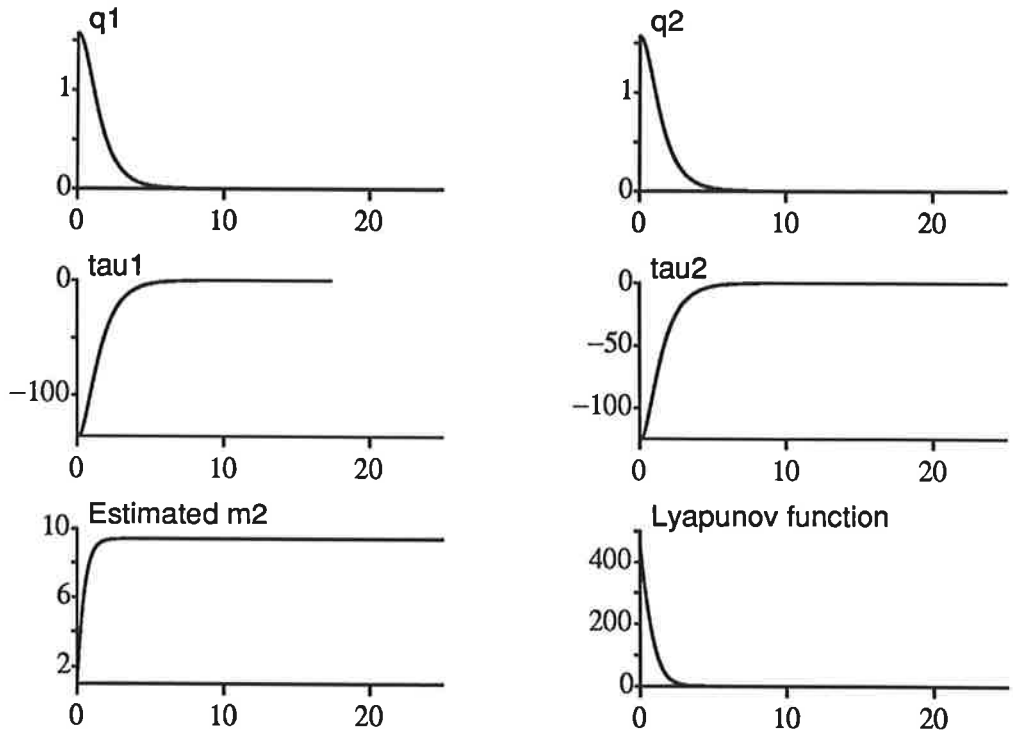

Figure 4. Simulation of the robot (55) with the self-optimizing adaptive control law (60). Upper graphs show q_1, q_2, and middle graphs show τ_1 and τ_2, respectively. Lower left graph shows the estimate $\widehat{\theta}$ of m_2. The lower right graph shows the Lyapunov function (28) that decreases everywhere. All graphs vs. time [s].

Theorem 1 and 2 are valid for this example with $T_{11} = T_{22} = \sqrt{2}I_{n\times n}$ and $t_{11} = \sqrt{2}$. Let $v_1 = \begin{pmatrix} v_{11} & v_{12} \end{pmatrix}^T = t_{11}\ddot{q}_r - T_{12}\dot{\tilde{q}}$, $v_2 = \begin{pmatrix} v_{21} & v_{22} \end{pmatrix}^T = t_{11}\dot{q} - B^T T_0 \tilde{x}$. The matrices ψ, ψ_0 of (48) are

$$\psi = \begin{pmatrix} l_1^2 v_{11} + l_1 l_2 (s_1 s_2 + c_1 c_2) v_{12} + \frac{1}{2} l_1 l_2 (c_1 s_2 - s_1 c_2)(\dot{q}_1 - \dot{q}_2) v_{22} - t_{11} g l_1 s_1 \\ l_1 l_2 (s_1 s_2 + c_1 c_2) v_{11} + l_2^2 v_{12} + \frac{1}{2} l_1 l_2 (c_1 s_2 - s_1 c_2)(\dot{q}_1 - \dot{q}_2) v_{21} - t_{11} g l_2 s_2 \end{pmatrix} \tag{57}$$

$$\psi_0 = \begin{pmatrix} m_1 l_1^2 v_{11} - m_1 t_{11} l_1 g s_1 \\ 0 \end{pmatrix} \tag{58}$$

The resulting control law is then

$$\begin{pmatrix} \tau_1 \\ \tau_2 \end{pmatrix} = \frac{1}{\sqrt{2}} \left(\begin{pmatrix} \psi_1 \\ \psi_2 \end{pmatrix} \theta + \begin{pmatrix} \psi_{01} \\ \psi_{02} \end{pmatrix} \right) - 50 \begin{pmatrix} \dot{q}_1 \\ \dot{q}_2 \end{pmatrix} - 50 \begin{pmatrix} q_1 \\ q_2 \end{pmatrix} \tag{59}$$

Theorems 1 and 2 are valid for this example so that stable optimal control can be anticipated. Simulations are shown in Fig. 3 for $m_1 = 1$ [kg], $m_2 = 10$ [kg], $l_1 = 1$ [m], and $l_2 = 1$ [m] and initial values $q_1 = q_2 = \pi/2$ [rad] and zero velocities. Notice that the Lyapunov function decreases everywhere (Fig. 3).

Assume now that the weight of the load $m_2 = \theta = 10$ [kg] is unknown so that adaptation is necessary. Choose the adaptation matrix $K_\theta = 3$. The resulting control law of (48-49) is then

$$\dot{\hat{\theta}} = -\frac{\sqrt{2}}{3}\psi^T \begin{pmatrix} \dot{q}_1 \\ \dot{q}_2 \end{pmatrix} - \frac{\sqrt{2}}{3}\psi^T \begin{pmatrix} q_1 \\ q_2 \end{pmatrix}$$

$$\begin{pmatrix} \tau_1 \\ \tau_2 \end{pmatrix} = \frac{1}{\sqrt{2}}\left(\begin{pmatrix} \psi_1 \\ \psi_2 \end{pmatrix} \hat{\theta} + \begin{pmatrix} \psi_{01} \\ \psi_{02} \end{pmatrix} \right) - 50 \begin{pmatrix} \dot{q}_1 \\ \dot{q}_2 \end{pmatrix} - 50 \begin{pmatrix} q_1 \\ q_2 \end{pmatrix} \tag{60}$$

A simulation that includes the self-optimizing adaptation is shown in Fig. 4 with the initial estimate $\hat{\theta} = 1$. All other initial conditions and system are the same as in Fig. 3. Apart from the initial adaptation transients the result is very similar to the optimal control simulation of Fig. 3. This indicates that the algorithm is capable to compensate for tenfold gain variations in the moment of inertia with quite good results.

Discussion and Conclusions

A time-variant optimal control problem of rigid body motion has been solved with explicit solutions to the Hamilton-Jacobi equation. The optimal solution provides asymptotically stable optimal control. Globally stable adaptive control for self-optimization has been designed to solve the case of uncertain parameters.

The proposed solutions contribute to the understanding of the close connections between classical mechanics and optimization theory for motion control. The matrix K of (28) represents a spring action around the desired position while terms containing $M(q)$ represents kinetic energy. The Hamiltonian $\mathcal{H} = \mathcal{T} + \mathcal{U}$ of analytical mechanics may be compared with the Hamilton-Jacobi solution $V(\tilde{x}, t)$ that represents a sum of kinetic energy and a 'potential energy' of a spring action described by a stiffness matrix K. The spring action thus formally replaces the gravitation as the source of potential energy.

The optimal control is globally asymptotically stable while the self-optimizing adaptive control is globally stable in the sense of Lyapunov. The uniform stability in the sense of Lyapunov follows from the existence of a negative semidefinite Lyapunov function derivative as shown in theorem 3. Finite initial conditions and q_r, $\dot{q}_r \in L^\infty$ mean that $V(\tilde{x}(t_0), t_0)$ is bounded. A finite value of the Lyapunov function V necessarily means a finite magnitude of the tracking errors $\tilde{q}$, $\dot{\tilde{q}}$. The L^∞–stability follows from the fact that the Lyapunov function can only decrease with time.

The control law contains linear and nonlinear compensations that can be calculated with algebraic matrix equations (25). The matrices T_{11}, T_{12} providing velocity and position

feedback are easily computed from the weighting matrices of control optimization. The closed-loop properties may be effectively chosen with the weighting matrices Q, R of (16). These matrices may be chosen according to the common design experiences in linear quadratic optimal control. The self-optimizing adaptation may be chosen with the weighting matrix K_θ.

The presented optimal control algorithm exhibits a certain similarity to the linear quadratic control problem. Equation (22) and the algebraic Riccati equation are similar but the solutions are very different. The Riccati equation solution is positive definite but the present algorithm does not in general provide a symmetric weighting matrix T_0. Secondly, the solution to the Hamilton-Jacobi equation in the linear quadratic control case is not composed in the same way as the solution (28) of the present work.

It is interesting to see that the optimization prescribes a non-zero T_{12} of the state transformation matrix of V to guarantee asymptotic stability. This state space transformation obtained with T_0 might be understood from a linear systems viewpoint. State-space equations of stable linear systems expressed in variables of velocities and positions (4) contain a dynamics matrix with eigenvectors $v = \begin{pmatrix} v_1^T & v_2^T \end{pmatrix}^T$ obtained from the eigenvalue problem

$$\begin{pmatrix} -K_d & -K_p \\ I & 0 \end{pmatrix} \begin{pmatrix} v_1 \\ v_2 \end{pmatrix} = \begin{pmatrix} -\lambda I & 0 \\ 0 & -\lambda I \end{pmatrix} \begin{pmatrix} v_1 \\ v_2 \end{pmatrix} \quad \Rightarrow \quad v_1 + \lambda v_2 = 0 \tag{61}$$

This means that velocity and position coordinates necessarily are dependent. The state space transformation (12) may therefore serve to eliminate some redundance while keeping the full state space order, *cf.* CERANOWICZ *et al* [3].

Many application tasks of controlled motion must be solved in due time and it can thus be argued that the infinite time problem is less relevant for applied motion control. However, a minor reformulation of the treated optimization problem shows that the treated problem has much relevance for practice. The considered infinite-time optimization criterion can be viewed as a finite time problem with a performance optimization together with an end point condition at $t = t_f$ on the closed-loop stability.

$$V_X(x(t_0), t_0) = \int_{t_0}^{\infty} L(\tilde{x}, u^*)dt = \int_{\infty}^{t_f} L(\tilde{x}, u^*)dt + V_0(x(t_f), t_f) \tag{62}$$

Notice that the Lagrangian L is positive so that $V(\tilde{x}(t_f), t_f) < V(\tilde{x}(t_0), t_0)$. This offers a possibility of learning action that can be obtained also for finite-time operation with

periodic or iterative motion. The self-optimizing adaptation of an optimal trajectory intended for periodic motion may thus be made by a few repetitive trials.

The application potential of the proposed methodology lies in the control design in areas such as robotics and flight control and in motion control analysis of *e.g.* biomechanics. Both optimal feedback control laws and optimal trajectory planning can be derived with the present approach. The self-optimizing adaptation is valuable for cases of uncertain or time-varying system parameters as well as for reconfiguration of the control system.

Only rigid body motion has been explicitly treated here. Structural flexibilities that can be modelled by methods of analytical mechanics may be included in the equations (1) and thus in the optimal control solution. Notice however that the presented method relies on measurement of all velocity and position variables. This may be a practical difficulty for applications to active damping.

Several extensions of the methods of this paper can be outlined. Finite-time optimization with a time-varying $K(t)$ leads to matrix equations that require matrix inversion of $M(q)$ and is thus computationally more complicated than the presented solution.

Appendix 1: Proof of Lemma 1

The Hamilton-Jacobi equation

The theorem claims that the Hamilton-Jacobi equation

$$-\frac{\partial V(\tilde{x},t)}{\partial t} = \min_u \left((\frac{\partial V(\tilde{x},t)}{\partial \tilde{x}})^T \dot{\tilde{x}} + L(\tilde{x},u) \right) \qquad (18-19)$$

is satisfied for a function

$$V(\tilde{x},t) = \frac{1}{2}\tilde{x}^T T_0^T \begin{pmatrix} M(q) & 0 \\ 0 & K \end{pmatrix} T_0 \tilde{x} \qquad (21)$$

The proof contains four steps:

1: Verification that $V = V(\tilde{x},t)$

2: Evaluation of partial derivatives of V,

3: Derivation of the u that minimizes H of (17)

4: Verification that V solves (19).

Firstly, it is necessary to verify that V and thus $M(q)$ is a function of $\tilde{x}$ and t only. Notice that the reference value $q_r(t)$ is by definition a function of t only. It is then obvious that

$$M(q) = M(\tilde{q} + q_r(t)) = M(\tilde{x},t) \qquad (A1.1)$$

The inertia matrix $M(q)$ is thus a function of the error-state $\tilde{x}$ and the time t which implies that $V = V(\tilde{x},t)$. The time derivative of the inertia matrix can be expressed as

$$\frac{dM(q)}{dt} = \frac{dM(\tilde{q}_r + q_r(t))}{dt} = (\frac{\partial M(q)}{\partial \tilde{q}})^T \frac{d\tilde{q}}{dt} + (\frac{\partial M(q)}{\partial q_r})^T \frac{dq_r}{dt}$$

or

$$\dot{M}(q,\dot{q}) = (\frac{\partial M(q)}{\partial \tilde{q}})^T \frac{d\tilde{q}}{dt} + (\frac{\partial M(q)}{\partial q_r})^T \frac{dq_r}{dt} \qquad (A1.2)$$

Secondly, partial derivatives of the function V need to be evaluated in order to test the hypothesis that V solves the Hamilton-Jacobi equation. The partial derivative of V with respect to time is

$$\frac{\partial V(\tilde{x},t)}{\partial t} = \frac{1}{2}\tilde{x}^T T_0^T \begin{pmatrix} \frac{\partial M(\tilde{x},t)}{\partial t} & 0_{n\times n} \\ 0_{n\times n} & 0_{n\times n} \end{pmatrix} T_0 \tilde{x} \qquad (A1.3)$$

$$\frac{\partial V(\tilde{x},t)}{\partial t} = (\frac{\partial V(\tilde{x},t)}{\partial q_r})^T \frac{\partial q_r(t)}{\partial t} = (\frac{\partial V(\tilde{x},t)}{\partial q_r})^T \frac{dq_r(t)}{dt} = (\frac{\partial V(\tilde{x},t)}{\partial x_r})^T \frac{dx_r}{dt} \qquad (A1.4)$$

The gradient of V with respect to the error-state $\tilde{x}$ is

$$\frac{\partial V(\tilde{x},t)}{\partial \tilde{x}} = T_0^T \begin{pmatrix} M(\tilde{x},t) & 0_{n\times n} \\ 0_{n\times n} & K \end{pmatrix} T_0\tilde{x} + \frac{1}{2}\tilde{x}^T T_0^T \begin{pmatrix} \frac{\partial M(\tilde{x},t)}{\partial x} & 0_{n\times n} \\ 0_{n\times n} & 0_{n\times n} \end{pmatrix} T_0\tilde{x} \qquad (A1.5)$$

Expression (A1.5) is a function of $\tilde{x}$ and t only and does not explicitly depend on $\ddot{q}$, $\ddot{\tilde{q}}$ or u. This gives

$$(\frac{\partial V(\tilde{x},t)}{\partial \tilde{x}})^T\dot{\tilde{x}} = \tilde{x}^T T_0^T \begin{pmatrix} M(\tilde{x},t) & 0_{n\times n} \\ 0_{n\times n} & K \end{pmatrix} T_0\dot{\tilde{x}} + \frac{1}{2}\sum_{k=1}^{2n} \tilde{x}^T T_0^T \begin{pmatrix} \frac{\partial M(\tilde{x},t)}{\partial x_k}\dot{\tilde{x}}_k & 0_{n\times n} \\ 0_{n\times n} & 0_{n\times n} \end{pmatrix} T_0\tilde{x} \qquad (A1.6)$$

The state space equation from u to $\tilde{x}$ of (13) is

$$\dot{\tilde{x}} = T_0^{-1} \begin{pmatrix} -\frac{1}{2}M(q)^{-1}\dot{M}(q,\dot{q}) & 0_{n\times n} \\ T_{11}^{-1} & -T_{11}^{-1}T_{12} \end{pmatrix} T_0\tilde{x} + T_0^{-1} \begin{pmatrix} M(q)^{-1} \\ 0_{n\times n} \end{pmatrix} u \qquad (13)$$

Substitution of $\dot{\tilde{x}}$ in (A1.6) gives

$$(\frac{\partial V(\tilde{x},t)}{\partial \tilde{x}})^T\dot{\tilde{x}} = \frac{1}{2}\tilde{x}^T T_0^T \begin{pmatrix} 0_{n\times n} & K^T \\ K & 0_{n\times n} \end{pmatrix} T_0\tilde{x} + \tilde{x}^T T_0^T Bu +$$

$$+\frac{1}{2}\tilde{x}^T T_0^T \begin{pmatrix} -\dot{M}(q,\dot{q}) + \sum_{k=1}^{2n} \frac{\partial M(\tilde{x},t)}{\partial x_k}\dot{\tilde{x}}_k & 0_{n\times n} \\ 0_{n\times n} & 0_{n\times n} \end{pmatrix} T_0\tilde{x} \qquad (A1.7)$$

The last term of (A1.7) is not explicitly dependent of u, $\ddot{q}$ because $M(\tilde{x},t) = M(q)$ is a function of q. Recall that the Lagrangian is

$$L(\tilde{x},u) = \frac{1}{2}\tilde{x}^T(t)Q\tilde{x}(t) + \frac{1}{2}u(t)^T Ru(t) \qquad (16)$$

A candidate of the Hamiltonian H (17) is the sum of (A1.7) and (16). A third step is now to evaluate how H depends on $u \in R^n$. The $u = u^*$ for which H has its minimum value is obtained from the partial derivatives with respect to u. Only the second terms of (A1.7) and (16) contribute to the partial derivatives.

$$\frac{\partial H}{\partial u} = \frac{\partial}{\partial u}((\frac{\partial V(\tilde{x},t)}{\partial \tilde{x}})^T\dot{\tilde{x}} + L(\tilde{x},u)) = B^T T_0\tilde{x} + Ru \qquad (A1.8)$$

Extremals of the Hamiltonian with respect to u is found by setting the partial derivatives $\partial H/\partial u$ equal to zero. The minimum is obtained for $u = u^*$

$$u^* = -R^{-1}B^T T_0\tilde{x} \qquad (A1.9)$$

A fourth step is now to verify that the suggested V satisfies (19). The time derivative of V is composed of (A1.7) and (A1.3-4)

$$\frac{dV(\tilde{x},t)}{dt} = \frac{\partial V(\tilde{x},t)}{\partial t} + (\frac{\partial V(\tilde{x},t)}{\partial \tilde{x}})^T\dot{\tilde{x}} =$$

$$= \tilde{x}^T T_0^T \begin{pmatrix} M(q) & 0_{n\times n} \\ 0_{n\times n} & K \end{pmatrix} T_0 \dot{\tilde{x}} + \frac{1}{2}\tilde{x}^T T_0^T \begin{pmatrix} \dot{M}(q,\dot{q}) & 0_{n\times n} \\ 0_{n\times n} & 0_{n\times n} \end{pmatrix} T_0 \tilde{x} \qquad (A1.10)$$

Substitution of $\dot{\tilde{x}}$ of (13) into (A1.10) gives

$$\frac{dV(\tilde{x},t)}{dt} = \frac{1}{2}\tilde{x}^T \begin{pmatrix} 0 & K^T \\ K & 0 \end{pmatrix} \tilde{x} + \tilde{x}^T T_0^T B u \qquad (A1.11)$$

Application of $u = u^*$ to $\dot{V}$ gives

$$\frac{dV(\tilde{x},t)}{dt} = \frac{1}{2}\tilde{x}^T \begin{pmatrix} 0 & K^T \\ K & 0 \end{pmatrix} \tilde{x} - \tilde{x}^T T_0^T B R^{-1} B T_0 \tilde{x} \qquad (A1.12)$$

Application of $u = u^*$ on the Lagrangian of optimal control

$$L(\tilde{x}, u^*) = \frac{1}{2}\tilde{x}^T (Q + T_0^T B R^{-1} B^T T_0)\tilde{x} \qquad (A1.13)$$

The Hamilton-Jacobi equation is satisfied for $u = u^*$ if

$$\frac{\partial V(\tilde{x},t)}{\partial t} + (\frac{\partial V(\tilde{x},t)}{\partial \tilde{x}})^T \dot{\tilde{x}} + L(\tilde{x}, u^*) = \frac{1}{2}\tilde{x}^T \left(\begin{pmatrix} 0 & K^T \\ K & 0 \end{pmatrix} + Q - T_0^T B R^{-1} B T_0 \right) \tilde{x} = 0 \qquad (A1.14)$$

It now follows that $V(\tilde{x},t)$ is a solution to the Hamilton-Jacobi equation, a *Hamiltons principal function*, for $u = u^*$ and matrices K, T_0 solving the algebraic matrix equation

$$\tilde{x}^T \left(\begin{pmatrix} 0 & K^T \\ K & 0 \end{pmatrix} + Q - T_0^T B R^{-1} B T_0 \right) \tilde{x} = 0; \qquad \forall \tilde{x} \qquad (22)$$

This proves lemma 1. □

Appendix 2: Proof of Theorem 1

From lemma 1 is known that

$$V(\tilde{x}(t),t) = \frac{1}{2}\tilde{x}^T T_0^T \begin{pmatrix} M(q) & 0 \\ 0 & K \end{pmatrix} T_0 \tilde{x} \qquad (21)$$

solves the Hamilton-Jacobi equation for $K = K^T$, T_0 solving the algebraic matrix equation

$$\tilde{x}^T \left(\begin{pmatrix} 0 & K \\ K & 0 \end{pmatrix} + Q - T_0^T B R^{-1} B^T T_0 \right) \tilde{x} = 0 \qquad (22)$$

The optimal feedback control law $u = u^*$ that minimizes J is

$$u^*(t) = -R^{-1} B^T T_0 \tilde{x}(t) \qquad (A2.1)$$

Let the weighting matrix Q, R of the Lagrangian be factorized with Cholesky-factorizations Q_1, Q_2, R_1 of (24) so that and choose

$$T_0 = \begin{pmatrix} T_{11} & T_{12} \\ 0 & I_{n\times n} \end{pmatrix} = \begin{pmatrix} R_1^T Q_1 & R_1^T Q_2 \\ 0 & I_{n\times n} \end{pmatrix}$$

$$K = \frac{1}{2}(Q_1^T Q_2 + Q_2^T Q_1) - \frac{1}{2}(Q_{12}^T + Q_{12}) \tag{25}$$

Application of these factorizations and the conditions of (24) directly shows that $K = K^T > 0$. The matrices K, T_0 of (25) solve the algebraic matrix equation of (22)

$$\left(\begin{pmatrix} 0 & K \\ K & 0 \end{pmatrix} + Q - T_0^T B R^{-1} B^T T_0 \right) = 0$$

or with application of (25)

$$\left(\begin{pmatrix} 0 & K \\ K & 0 \end{pmatrix} + \begin{pmatrix} Q_{11} & Q_{12} \\ Q_{12}^T & Q_{22} \end{pmatrix} - \begin{pmatrix} Q_1^T Q_1 & Q_1^T Q_2 \\ Q_2^T Q_1 & Q_2^T Q_2 \end{pmatrix} \right) = 0 \tag{A2.2}$$

The Hamilton-Jacobi equation is satisfied because

$$\frac{\partial V(\tilde{x},t)}{\partial t} + (\frac{\partial V(\tilde{x},t)}{\partial \tilde{x}})^T \dot{\tilde{x}} + L(\tilde{x},u) = \frac{1}{2}\tilde{x}^T \left(\begin{pmatrix} 0 & K \\ K & 0 \end{pmatrix} + Q - T_0^T B R^{-1} B^T T_0 \right) \tilde{x} = 0 \tag{A2.3}$$

Notice that $V \geq 0$ for all positive definite K. The cost function may then be evaluated as

$$\int_{t_0}^{t_f} L(\tilde{x},u^*)dt = \int_{t_0}^{t_f} -\dot{V}dt = V(\tilde{x}(t_0),t_0) - V(\tilde{x}(t_f),t_f) \leq V(\tilde{x}(t_0),t_0) \tag{A2.4}$$

The optimality of the control follows from (A2.3) and it follows that $\tilde{x} \in L^2(t_0,t_f)$, $\forall t_f \geq t_0$. The claim on L^2–stability follows immediately from (A2.4). From (24) and (25) follows that $K = K^T > 0$ and the inertia matrix $M(q)$ is positive definite by definition (1). The function V has a unique minimum at the origin. It is also nonnegative and radially growing w.r.t. $||\tilde{x}||$ for all $t \geq t_0$ so that it fulfills all requirements on a Lyapunov function candidate. The time derivative $dV/dt < 0$ which implies that V is a Lyapunov function for a uniformly, globally, asymptotically stable system. This finishes the proof.

□

References

[1] S. Arimoto and F. Miyazaki, "On the stability of PID-feedback with sensory information" in *Robotics Research*, (Ed. M. Brady and R.P. Paul), MIT Press, Cambridge, 1984.

[2] V.I. Arnold, *Mathematical methods of classical mechanics*, Springer Verlag, 1978, p. 255.

[3] A.Z. Ceranowicz, B.F. Wyman, and H. Hemami, "Control of constrained systems of controllability index two", *IEEE Trans. Autom. Control*, AC-25, 1980, pp. 1102-1111.

[4] J.J. Craig, *Introduction to robotics - Mechanics and control*, Addison-Wesley, 1986, chapter 6.

[5] J.J. Craig, P. Hsu, and S. S. Sastry, "Adaptive control of mechanical manipulators", *Int. J. Robotics Research*, Vol. 6 (2), 1987, pp.16-28.

[6] S. Dubowsky and D.T. DesForges, "The application of model reference adaptive control to robotic manipulators", *Trans. ASME, J. Dynamic Systems, Measurement, Control, Vol. 101*, pp. 193-200.

[7] W.H. Fleming and R.W. Rishel, *Deterministic and stochastic optimal control*, Springer Verlag, New York, USA, 1975, pp. 94-97.

[8] E. Freund . "The structure of decoupled nonlinear systems", *Int. J. Control, Vol. 21*, 1975, 443-450.

[9] H. Goldstein, *Classical Mechanics*, Addison-Wesley, 1950, pp. 273 ff.

[10] G.C. Goodwin and K.S. Sin , *Adaptive filtering, prediction and control*, Prentice-Hall, 1984, chapter 6.

[11] W. Hahn, *Stability of motion*, Springer Verlag, New York, USA, 1967, chapter IV and chapter 55.

[12] H. Hemami and B.R. Chen, "Stability analysis and input design of a two-link planar biped", *Int. J. Robotics Research*, Vol. 3, 1984, pp.93-100.

[13] A. Isidori, A. Krener, C. Gori Giorgi, S. Monaco: "Nonlinear dcoupling via feedback: a differential geometric approach", *IEEE Trans. Automatic Control, AC-26*, 1981, 331-345.

[14] L.R. HUNT, R. SU, G. MEYER , "Global transformations of nonlinear systems", *IEEE Trans. Autom. Control, AC-28*, 1983, 24-31.

[15] R. JOHANSSON, "Direct adaptive control - Global Lyapunov stability and exponential convergence", Proc. 25th IEEE CDC, Athens, Greece, 1986.

[16] R. JOHANSSON, "Parametric models of linear multivariable systems for adaptive control", *IEEE Trans. Autom. Control*, AC-32, 1987, pp. 303-313.

[17] R. JOHANSSON, "Lyapunov design for adaptive control of robots", *Proc. IFAC Nonlinear Control Systems Design Symp.*, Capri, Italy, 1989.

[18] A.J. KOIVO AND T. GUO, "Adaptive linear controller for robotic manipulators", *IEEE Trans. Automatic Control*, AC-28, pp. 162-171.

[19] C.S.G. LEE, "Robot arm kinematics, dynamics and control", *IEEE Computer*, 1982, pp. 62-80.

[20] C.S.G. LEE AND M.J. CHEN, "A suboptimal control design for mechanical manipulators", *Proc ACC 1983*, pp. 1056 -1060.

[21] C.S.G. LEE AND M.J. CHUNG, "An adaptive control strategy for mechanical manipulators", *IEEE Trans. Automatic Control*, AC-29, pp. 837-840.

[22] E. B. LEE AND L. MARKUS , *Foundations of Optimal Control Theory*, John Wiley, 1967, Th. 7, p. 348.

[23] PAUL, R.P., *Robot Manipulators – Mathematics, Programming and Control*, The MIT Press, Cambridge, USA, 1981 .

[24] W.A. PORTER, "Diagonalization and inverses for nonlinear systems", *Int. J. Control, Vol. 21*, 1970, 67-76.

[25] G.N. SARIDIS AND C.S.G. LEE, "An approximation theory of optimal control for trainable manipulators", *IEEE Systems, Man, Cybernetics*, SMC-9, 1979, pp. 152-159.

[26] S.N. SINGH AND W.J. RUGH. "Decoupling in a class of nonlinear systems by state variable feedback", *Trans. ASME J. Dyn. Syst. Measurement and Control, Vol. 94*, 1972, 323-324.

[27] SLOTINE, J.J.E. AND LI, W., "On the adaptive control of robot manipulators", *Int. J. Robotics Research, Vol. 6(3)*, 1987, pp. 49-59.

[28] M. TOMIZUKA, A. JABBARI, R. HOROWITZ, D.M. AUSLANDER AND M. DE-

NOME, "Modelling and identification of mechanical systems with nonlinearities", *Proc. 7th IFAC/IFORS Symp. on Identification*, York, U.K., 1985, pp. 845-850.

[29] M. VUKABRATOVIĆ AND N. KIRĆANSKI, "A method for optimal synthesis of manipulation robot trajectories", *J. Dynamic Systems, Measurement, Control*, 104, 1982, 188-193.

[30] M. VUKABRATOVIĆ, D. STOKIĆ, AND N. KIRĆANSKI, "Towards nonadaptive and adaptive control of manipulation robots", *IEEE Trans. Automatic Control*, AC-29, 1984, pp. 841-844.