LUND UNIVERSITY

A Numerical Procedure for Calculating Temperature in Hollow Structures Exposed to Fire

Wickström, Ulf

1979

Link to publication

Citation for published version (APA):
Wickström, U. (1979). *A Numerical Procedure for Calculating Temperature in Hollow Structures Exposed to Fire*. (Report / Lund Institute of Technology, Lund, Sweden, Department of Structural Mechanics; Vol. 79-3). Lund Institute of Technology.

Total number of authors:
1

General rights
Unless other specific re-use rights are stated the following general rights apply:
Copyright and moral rights for the publications made accessible in the public portal are retained by the authors and/or other copyright owners and it is a condition of accessing publications that users recognise and abide by the legal requirements associated with these rights.
• Users may download and print one copy of any publication from the public portal for the purpose of private study or research.
• You may not further distribute the material or use it for any profit-making activity or commercial gain
• You may freely distribute the URL identifying the publication in the public portal

Read more about Creative commons licenses: https://creativecommons.org/licenses/

Take down policy
If you believe that this document breaches copyright please contact us providing details, and we will remove access to the work immediately and investigate your claim.

LUND UNIVERSITY

PO Box 117
221 00 Lund
+46 46-222 00 00

LUND INSTITUTE OF TECHNOLOGY · LUND · SWEDEN
DEPARTMENT OF STRUCTURAL MECHANICS
REPORT NO. 79 - 3

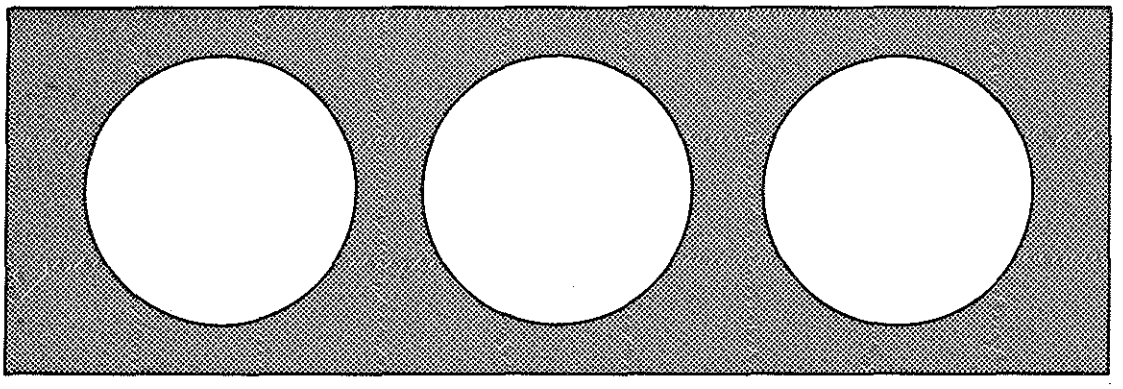

ULF WICKSTRÖM

A NUMERICAL PROCEDURE FOR CALCULATING TEMPERATURE IN HOLLOW STRUCTURES EXPOSED TO FIRE

LUND INSTITUTE OF TECHNOLOGY LUND SWEDEN

DEPARTMENT OF STRUCTURAL MECHANICS

REPORT No. 79-3

A Numerical Procedure for Calculating Temperature in Hollow Structures Exposed to Fire

Ulf Wickström

TABLE OF CONTENTS PAGE

1.	INTRODUCTION	3
2.	HEAT EXCHANGE IN VOIDS	5
2.1	Convection	5
2.2	Radiation	8
3.	EQUILIBRIUM OF TOTAL RATE OF HEAT FLOW	12
4.	COMPUTER ANALYSIS	14
5.	EXAMPLES	17
5.1	Example 1 - Insulated Steel Columns	17
5.2	Example 2 - Insulated Steel Beam	20
5.3	Example 3 - Hollow Core Concrete Slab Element	23
6.	SUMMARY AND CONCLUSIONS	27
NOMENCLATURE		28
REFERENCES		29

1. INTRODUCTION

A nonlinear heat flow equation must be solved to predict the distribution of temperature in a structure exposed to fire. Since closed-form analytical solutions of such equations do not exist even for one-dimensional cases, numerical schemes that incorporate either the finite element or finite difference method have generally been employed to approximate solid state heat conduction [1-4]. Although many structures and structural assemblages enclose voids (Figure 1.1), no general procedure to be used to calculate heat exchange by radiation and convection through a void has heretofore been available. Thus, major simplifying assumptions are normally made to account for the effect of heat exchange through voids on the distribution of temperature in surrounding solids [5-8].

A procedure to be used to approximate two-dimensional heat exchange in structural voids is presented here. This procedure has been so coded that it can be easily coupled to most algorithms used to predict heat conduction in solid structural elements. The surface surrounding a void is divided into a finite number of discrete zones, and radiation and convection boundary conditions are accounted for. The accuracy of heat transfer calculations where the above procedure has been incorporated increases with the number of zones into which an enclosure surface has been divided. In fact, calculations of radiation heat exchange will converge to an exact solution if a sufficiently large number of zones have been used to model a void.

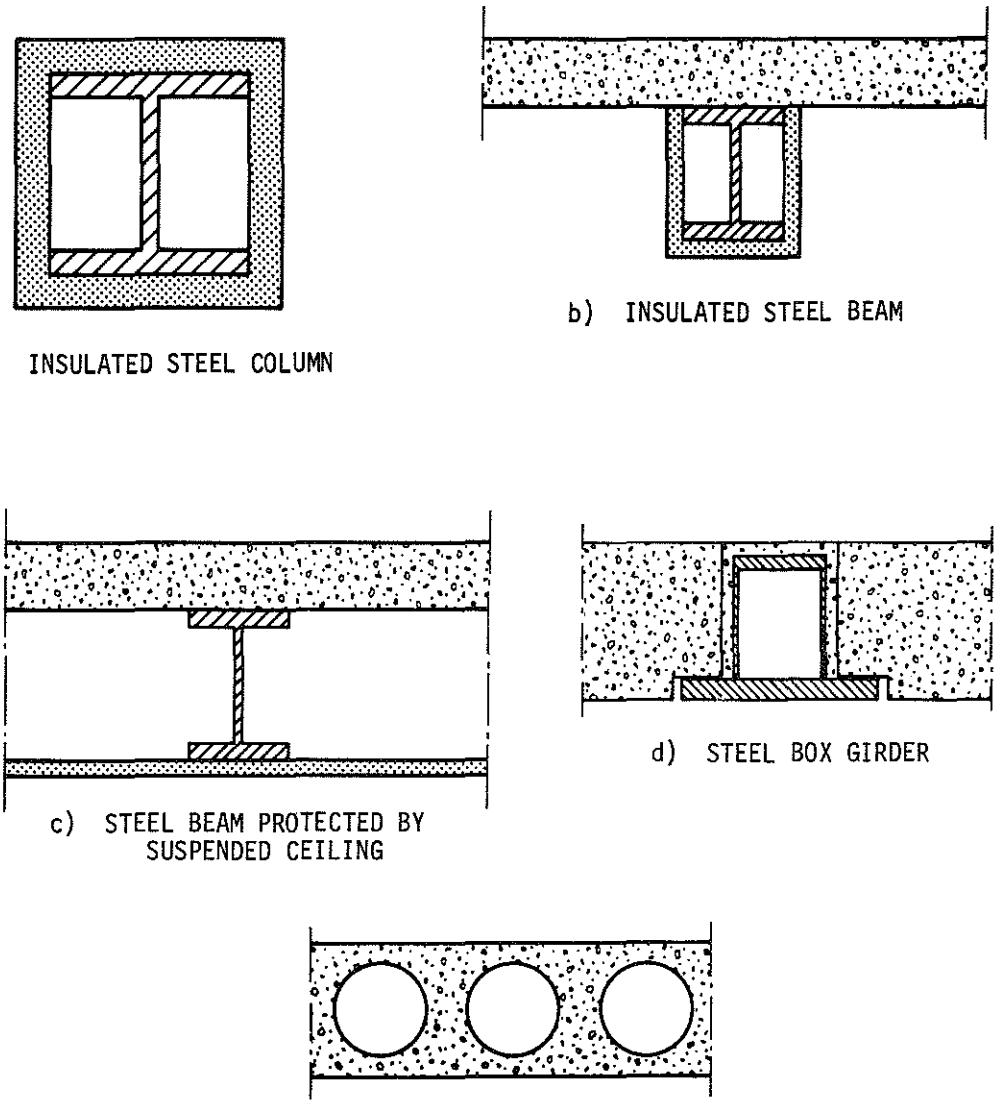

Figure 1. Structures with voids

2. HEAT EXCHANGE IN VOIDS

All three modes of heat transfer - conduction, radiation, and convection - occur in a void enclosed by surfaces at varying temperature. Conduction is negligible, however, except for extremely small voids and radiation increasingly dominates for increasing temperature [9].

2.1 Convection

No simple expression exists for free convective heat transfer in enclosed spaces for geometric configurations other than parallel plates at uniform temperature. The convective heat transfer is then calculated as a function of the temperature of the plates [10], or if a fictitious air temperature is defined as the average temperature of the plates, as a function of this fictitious air temperature and the temperature of one of the plates.

Since convection accounts for only a relatively small part of the total heat transferred through a void at elevated temperature, the same type of expression has been used here to approximate convection for all void configurations. Thus the convective heat transfer to an enclosure boundary is written:

$$q_c = \beta_v (T_s - T_{air})^{\gamma_v} \qquad (2.1)$$

where β_v and γ_v are the convection factor and convection power, respectively, at the enclosure boundary, and T_s and T_{air} are surface and fictitious air temperature, respectively.

The volumetric specific heat of air is of a magnitude less than 10^{-3} times that of most solid materials and is therefore neglected. Air temperature is assumed to be uniform over the void and there is assumed to be no flow of air either in or out of the void.

The total heat transferred to the air from enclosure surfaces must be zero at any given time to conserve energy. If a void is modeled as shown in Figure 2.1 with a finite number of zones, each at a uniform temperature, the total heat transferred to the enclosed air is

$$Q_{c_{tot}} = \sum_{i=1}^{N} q_{c_i} A_i \qquad (2.2)$$

where N is number of zones and q_{c_i} and A_i are the heat flux per unit area and the area of zone i, respectively. Equation (2.1) is now substituted into Equation (2.2) and the following expression, set equal to zero to satisfy the conservation of energy condition, is obtained:

$$\sum_{i=1}^{N} \beta_{v_i} A_i (T_i - T_{air})^{\gamma_v} = 0 \qquad (2.3)$$

where β_{v_i} and T_i are the convection factor and temperature, respectively, of zone i. The convection power γ_v varies with type of air flow in a void and is largely independent on surface properties. It is therefore assumed equal for all surfaces surrounding an enclosure. If all temperatures T_i are known, T_{air} can readily be computed by iteration and local heat transfer to zone i can be calculated as

$$Q_{c_i} = \beta_{v_i} A_i (T_i - T_{air})^{\gamma_v} \quad i = 1,2,3,\ldots N \qquad (2.4)$$

Equation (2.4) relates temperature and rate of heat flow for zones between the nodal points surrounding a void. In a finite element analysis, however, temperature and rate of heat flow must be specified at nodal points. If nodal quantities are superscribed (*), an alternative formula can be derived:

$$Q^*_{c_i} = H^*_i \, \eta^*_{c_i} \qquad i = 1, 2, 3, \ldots, N \qquad (2.5)$$

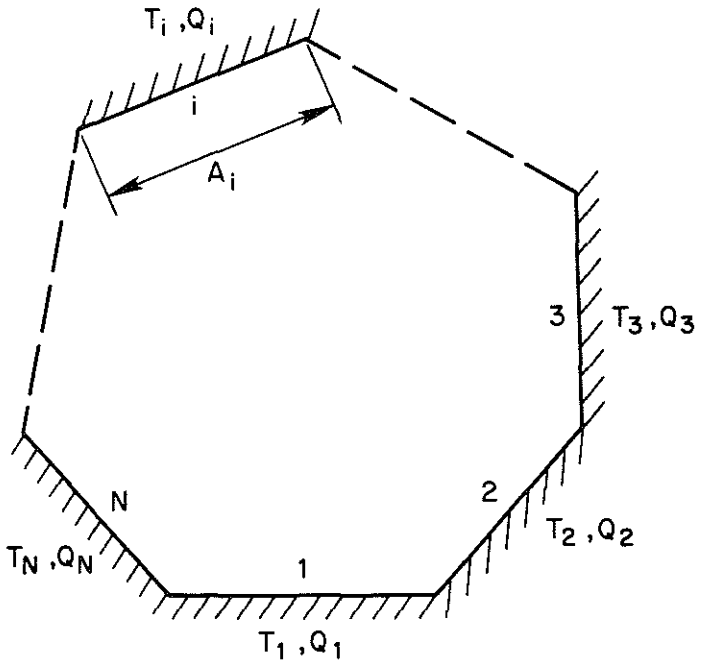

Figure 2.1. Two-dimensional void surrounded by a finite number of enclosure surfaces or zones

where

$$H_i^* = \frac{1}{2} (\beta_{v_{i-1}} A_{i-1} + \beta_{v_i} A_i) \quad i = 2, 3, \ldots, N \quad (2.6a)$$

$$H_i^* = \frac{1}{2} (\beta_{v_1} A_1 + \beta_{v_N} A_N) \quad (2.6b)$$

and

$$\eta_{c_i}^* = (T_i^* - T_{air})^{\gamma_v} \quad i = 1, 2, 3, \ldots, N \quad (2.7)$$

Since convection factors β_{v_i} are assumed to be constant, convection factors H_i^* are also constant and need not be recalculated as enclosure surface temperature changes.

In vector form, Equation (2.5) can be written as

$$\underline{Q}_c^* = \underline{H}^* \, \underline{\eta}_c^* \quad (2.8)$$

where $\underline{Q}_c^*$ is vector of rate of heat convected to the nodes surrounding a void, $\underline{H}^*$ is diagonal convection matrix, and $\underline{\eta}_c^*$ is vector of modified nodal temperatures.

Since the energy stored in the enclosed air is negligible, the temperature of the void can be calculated by the following iteration formula when surrounding nodal temperatures are known:

$$T_{air}^{j+1} = \sum_{i=1}^{N} \{H_i^*(T_{air}^j)T_i^*\} / \sum_{i=1}^{N} \bar{H}_i^*(T_{air}^j) \qquad (2.9)$$

where the superscript j refers to iteration steps and

$$\bar{H}_i^*(T_{air}) = H_i^*(|T_i^* - T_{air}|)^{(\gamma_v - 1)} \qquad (2.10)$$

Iteration terminates when the difference between air temperature resulting from two successive iterations is less than a permissible value expressed as

$$\frac{|T_{air}^{j+1} - T_{air}^j|}{|T_{air}^{j+1} + T_{air}^j|} < \text{permissible error} \qquad (2.11)$$

Normally, convergence can be achieved in a small number of iteration steps.

2.2 Radiation

Only voids with diffuse-gray surfaces are considered. The directional spectral emissivity and absorptivity of a diffuse-gray surface by definition do not depend on either angle or wavelength, but on surface temperature. Although most materials are not truly diffuse-gray, the assumption simplifies void radiation theory and is often made.

A void is divided into a number of zones as shown in Figure 2.2. The temperature and heat flux of each zone or

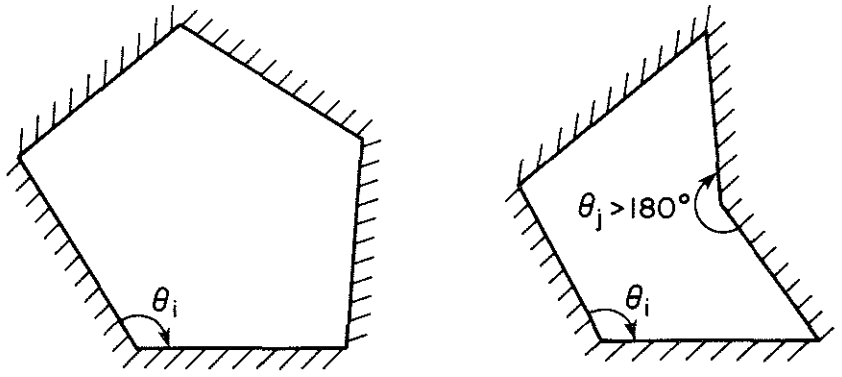

a) ALL ANGLES BETWEEN ENCLOSURE SURFACES LESS THAN 180°

b) ONE ANGLE BETWEEN ENCLOSURE SURFACES GREATER THAN 180°

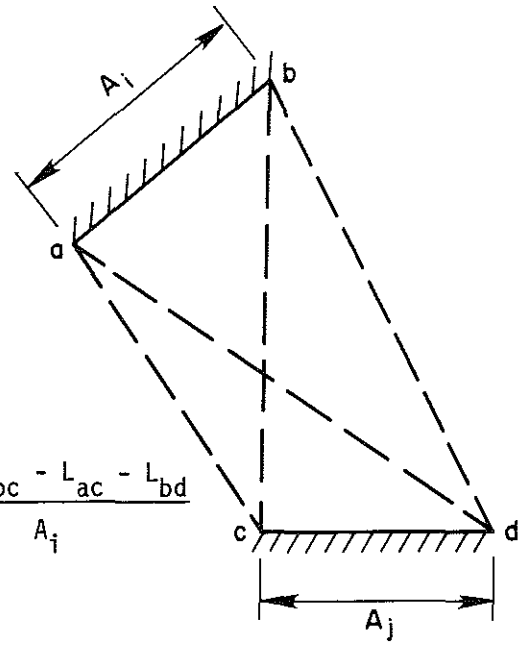

$$F_{ij} = \frac{L_{ad} + L_{bc} - L_{ac} - L_{bd}}{2 \quad A_i}$$

c) HOTTEL'S CROSSED-STRING METHOD

Figure 2.2. Calculation of view factors

individual surface are assumed to be uniform. The fraction of radiation emitted from one surface and absorbed or reflected by another is defined as the geometric configuration factor or view factor between the two surfaces. The view

factor depends on the orientation of surfaces with respect to each other. If all zones are straight and all interior angles between zone surfaces are less than or equal to 180° (Figure 2.2a), Hottel's crossed-string method [11] can be used to calculate view factors for two-dimensional configurations such as that shown in Figure 2.2c

$$F_{ij} = \frac{L_{ad} + L_{bc} - L_{ac} - L_{bd}}{2L_i} \qquad (2.12)$$

where L is the distance between any two corners of the surface surrounding a void. The formulation is well suited for computer calculation, but cannot be used to model a void with corners such as that shown in Figure 2.2b.

Radiation heat flow and absolute surface temperature for a void with N zones can be related by the following expression [12]

$$\sum_{j=1}^{N} \left(\frac{\delta_{kj}}{\varepsilon_j} - F_{kj}\,\frac{1-\varepsilon_j}{\varepsilon_j}\right)\frac{Q_{r_j}}{A_j} = \sum_{j=1}^{N} (F_{kj} - \delta_{kj})\sigma T_j^4 \qquad (2.13)$$

where, corresponding to each surface surrounding the void, k is one of the values 1, 2, ..., N, and δ_{kj} is the Kronecker delta defined as

$$\delta_{kj} = 1 \quad \text{when} \quad k = j$$

$$\delta_{kj} = 0 \quad \text{when} \quad k \neq j$$

If

$$\eta_{r_i} = T_i^4 \qquad (2.14)$$

then for all zones Equation (2.13) can be written in matrix form as

$$\underline{X}\ \underline{Q}_r = \underline{Y}\ \underline{\eta}_r \qquad (2.15)$$

where

$$X_{kj} = \left(\frac{\delta_{kj}}{\varepsilon_j} - F_{kj}\,\frac{1-\varepsilon_j}{\varepsilon_j}\right) \tag{2.16}$$

$$Y_{kj} = (F_{kj} - \delta_{kj})\sigma \tag{2.17}$$

$\underline{Q}_r$ and $\underline{\eta}_r$ are vectors with N components of rate of heat flow radiated to the zones and the absolute temperature to the fourth power, respectively, of individual surfaces. When $\underline{X}$ is inverted,

$$\underline{Q}_r = \underline{E}\ \underline{\eta}_r \tag{2.18}$$

where

$$\underline{E} = \underline{X}^{-1}\ \underline{Y} \tag{2.19}$$

If all ε's are constant and the geometry of the void remains unchanged, the matrices $\underline{X}$ and $\underline{Y}$ and consequently $\underline{E}$ are constant. In a step-by-step solution, the NxN matrix thus needs be inverted only once.

To adapt Equation (2.18) to a finite element analysis, a transformation similar to that necessary to model convection heat exchange must be performed [9]. Nodal temperature and radiative heat transfer are thus related by

$$\underline{Q}_r^* = \underline{E}^*\ \underline{\eta}_r^* \tag{2.20}$$

where $\underline{\eta}_r^*$ is the vector of nodal temperature to the fourth power.

The properties of the radiation matrix $\underline{E}^*$ are identical to those of a finite element conductivity matrix; that is, $\underline{E}^*$ is symmetric, singular of rank one, and the sum of each column and row is zero. The latter property ensures that the sum of radiated heat flow from surrounding nodes is always zero, which in physical terms means that no internal energy is generated.

3. EQUILIBRIUM OF TOTAL RATE OF HEAT FLOW

The heat transfer equations for a solid with voids idealized by a system of finite elements can be stated in terms of heat flow equilibrium at the nodes of the system at any time:

$$\underline{Q}^s + \underline{Q}^i = \underline{Q}^e + \underline{Q}^g + \underline{Q}^c + \underline{Q}^r \tag{3.1}$$

where

$\underline{Q}^s$ = rate at which heat is stored in elements adjacent to a node

$\underline{Q}^i$ = rate of heat flow to elements adjacent to a node by heat conduction

$\underline{Q}^e$ = rate at which heat enters a node from an external source

$\underline{Q}^g$ = rate at which heat is generated within elements adjacent to a node

$\underline{Q}^c$ = rate at which heat enters a node on the surface of a void by convection

$\underline{Q}^r$ = rate at which heat enters a node on the surface of a void by radiation

The matrices for the rate at which heat is stored and conducted are

$$\underline{Q}^s = \underline{C}\ \dot{\underline{T}} \tag{3.2}$$

and

$$\underline{Q}^i = \underline{K}\ \underline{T} \tag{3.3}$$

respectively, where $\underline{C}$ is system heat capacity matrix, $\underline{K}$ is system thermal conductivity matrix, $\underline{T}$ is vector of nodal point temperature, and $\dot{\underline{T}}$ is vector of time rate-of-change of nodal point temperature.

Equations (2.8) and (2.20) express the rate of heat flow due to heat exchange between nodes on the surface enclosing a void. Since local node numbers are used in these equations, calculated flow must be distributed among appropriate nodes in the overall system. Computational effort for each time step in the step-by-step integration is relatively small since the radiation matrix $\underline{E}^*$ and the convection matrix $\underline{H}^*$ need be calculated only once.

4. COMPUTER ANALYSIS

A set of FORTRAN subroutines embodying the analytical procedure developed above has been programmed so that the analysis can easily be coupled to most programs based on finite element or finite difference approximations of solid state conduction [9]. In Figure 4.1, the main computational steps in the procedure are indicated in a flow chart. The subroutines for calculating heat exchange through voids are called for first outside and then inside the step-by-step integration loop.

The nodes on the surface surrounding a void are described in the input by node groups. Each node group is assigned node numbers, emissivity factor, and convection factor. Thereafter, any void can be identified simply by node group numbers. For each enclosure in a structure, convection and radiation matrices $\underline{H}^*$ and $\underline{E}^*$ are calculated and stored. If geometry and boundary conditions of a structure are symmetric with respect to a line through a void, only one-half or, where double symmetry exists, one-quarter of the structure need be modeled.

For each time step convection and radiation heat transfer are calculated as previously described. The computational effort for these calculations is usually very small when compared to that necessary to analyze heat conduction in solids.

The routines described above were coupled to the finite element program FIRES-T [1] and three structures assumed to be exposed to the ASTM E-119 fire were analyzed. Where possible, identical boundary conditions and material properties were assumed in the three analyses.

All fire boundary conditions were simulated by the following expression

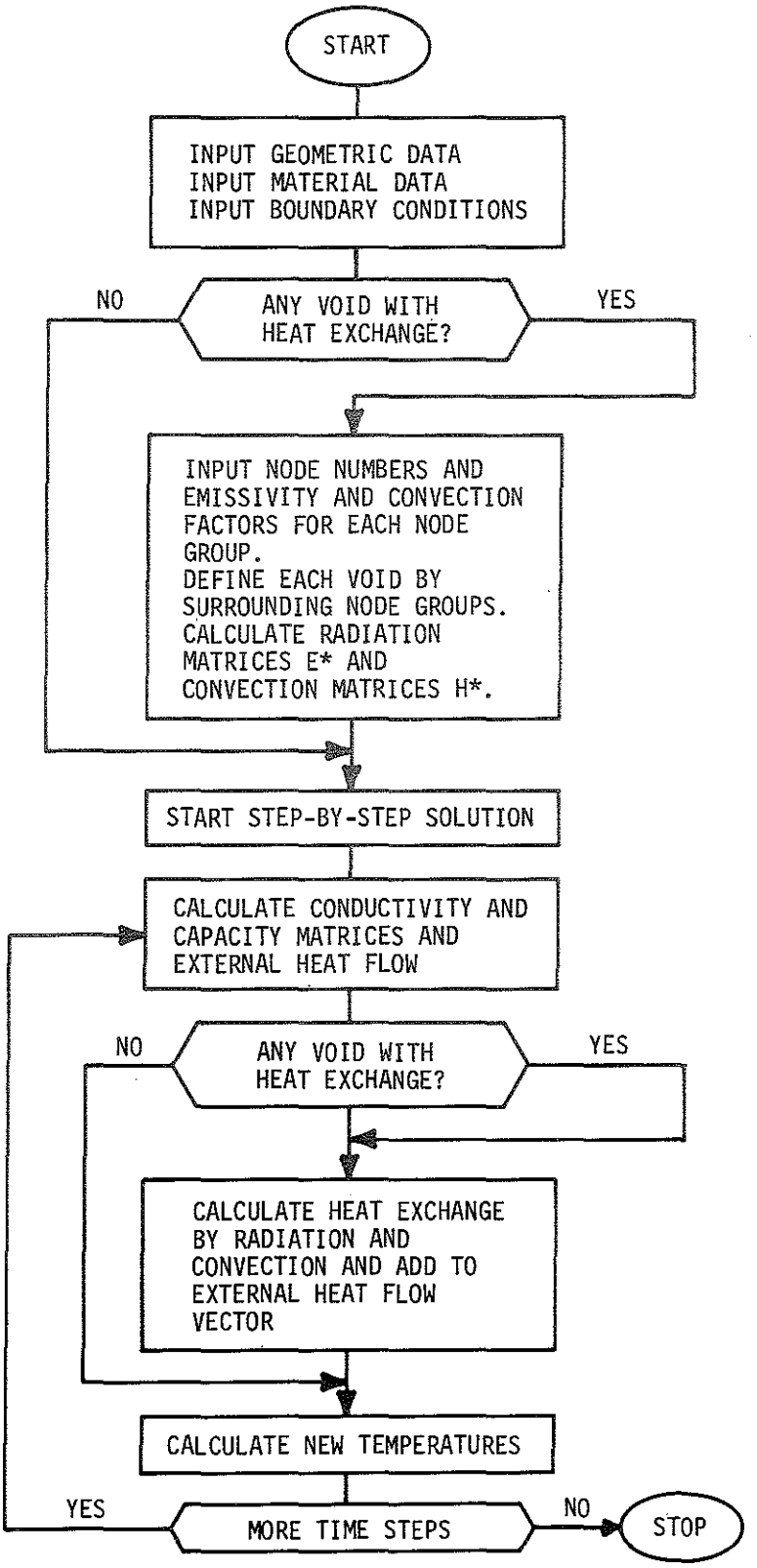

Figure 4.1. Flow chart of a typical program for analyzing heat exchange in structures with voids

$$q_f = \beta_f (T_f - T_s)^{\gamma_f} + \varepsilon_r \sigma \{T_f^4 - T_s^4\} \qquad (4.1)$$

where

β_f = convection factor at fire boundary
T_f = absolute fire temperature
T_s = absolute surface temperature
γ_f = convection power at fire boundary
ε_r = resultant emissivity
σ = Stefan-Boltzmann constant
q_f = heat flux at boundary surface due to fire

For examples 2 and 3 the following values for the parameter in Equation (4.1) were used

$$\beta_f = 2.12 \text{ W/m}^2\text{K}^{\gamma_f}$$

$$\gamma_f = 1.33$$

$$\varepsilon_r = 0.7$$

$$\sigma = 5.67 \cdot 10^{-8} \text{ W/m}^2\text{K}^4$$

Because turbulent air flow has been assumed in the voids for the cases considered here, convection factors and powers were chosen as

$$\beta_{v_i} = 1.6 \text{ W/m}^2\text{K}^{\gamma_v}$$

$$\gamma_v = 1.33$$

Representative thermal properties for concrete, steel, and gypsum were used in all analyses. A detailed description of these properties can be found in Reference [9].

5. EXAMPLES

5.1 Example 1 - Insulated Steel Columns

In [5], Lie and Harmathy reported experimental and analytical findings on the fire response of a steel column insulated with firebrick (Figure 5.1). The void heat transfer analysis described above coupled to the program FIRES-T [1] was used to calculate heat transfer through the void in this column. As in the analysis performed by Lie and Harmathy using a one-dimensional approximate radiation model, convection heat exchange was neglected. Material properties identical to those in [5] were used in the present analysis. Since the column had been uniformly exposed to fire, only one-quarter of the cross section was modeled.

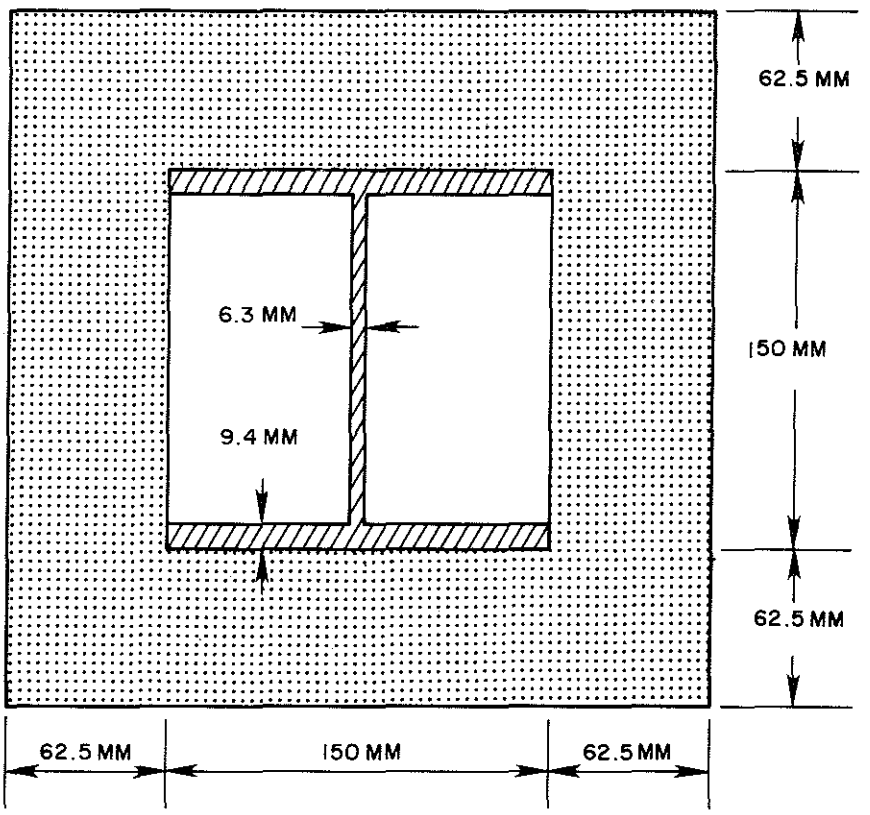

Figure 5.1. Firebrick-insulated steel column specimen (Lie & Harmathy)

The results of the two-dimensional radiation model more closely agreed with the experimental values for steel temperature than did the results from Lie and Harmathy's model (Figure 5.2). In Figure 5.3, calculated temperature distribution along one-half the web and a flange is plotted for one and two hours of fire exposure. Although temperature did not vary greatly in the steel, the temperature gradient in the web changed direction between one and two hours after the temperature in the column had increased to the point where radiation heat transfer was significant. The values calculated using the one- and two-dimensional models agreed as well as they did only because temperature gradients in the steel were quite low.

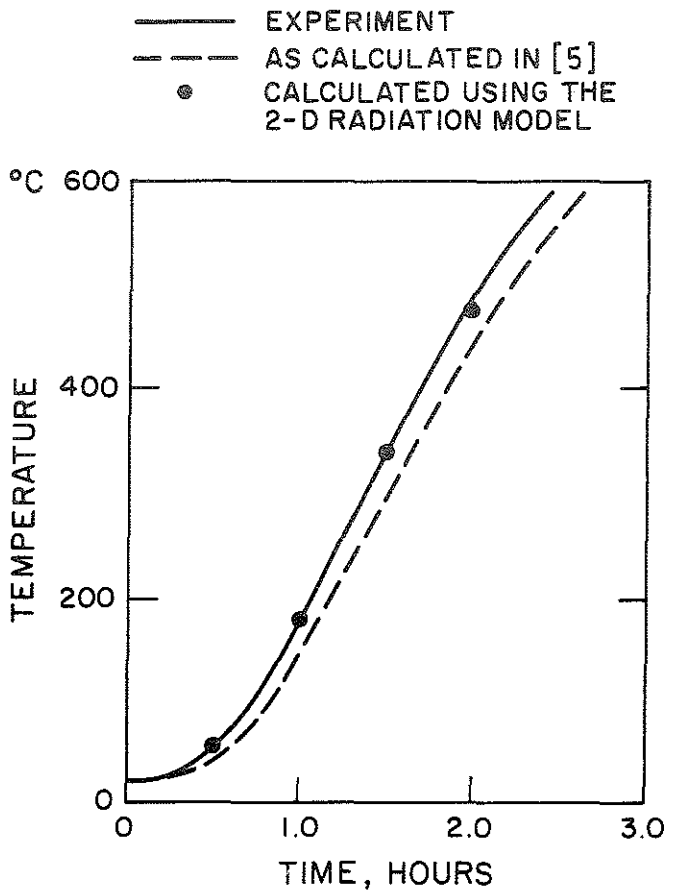

Figure 5.2. Comparison between measured and calculated temperature history for insulated steel column

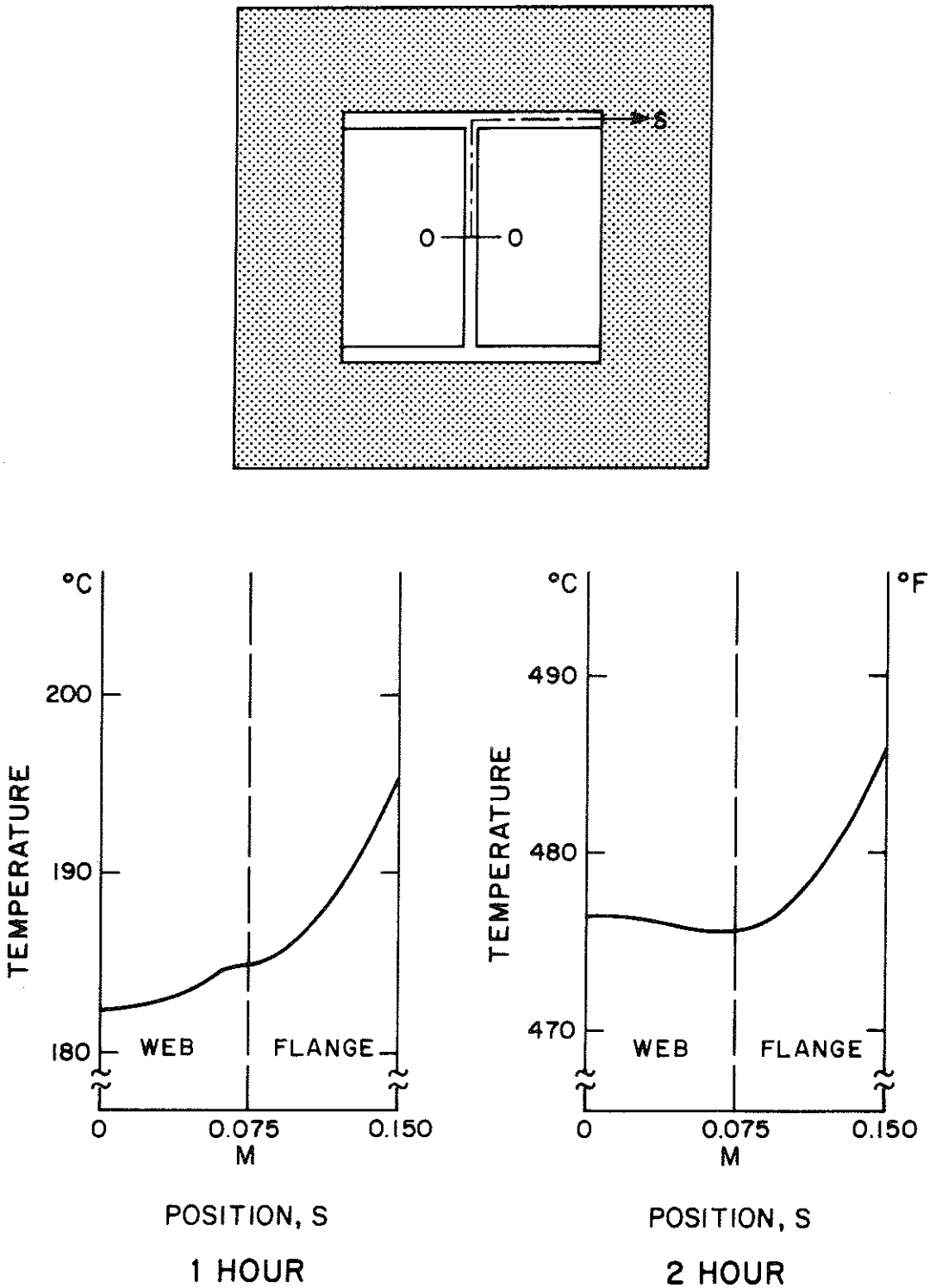

Figure 5.3. Temperature distribution along centerlines of web and flange of insulated steel column

5.2 Example 2 - Insulated Steel Beam

A steel beam protected by gypsum board (Figure 5.4) and a portion of a concrete slab in the vicinity of the beam were modeled by finite elements and analyzed considering heat transfer through the void. Surface emissivities for

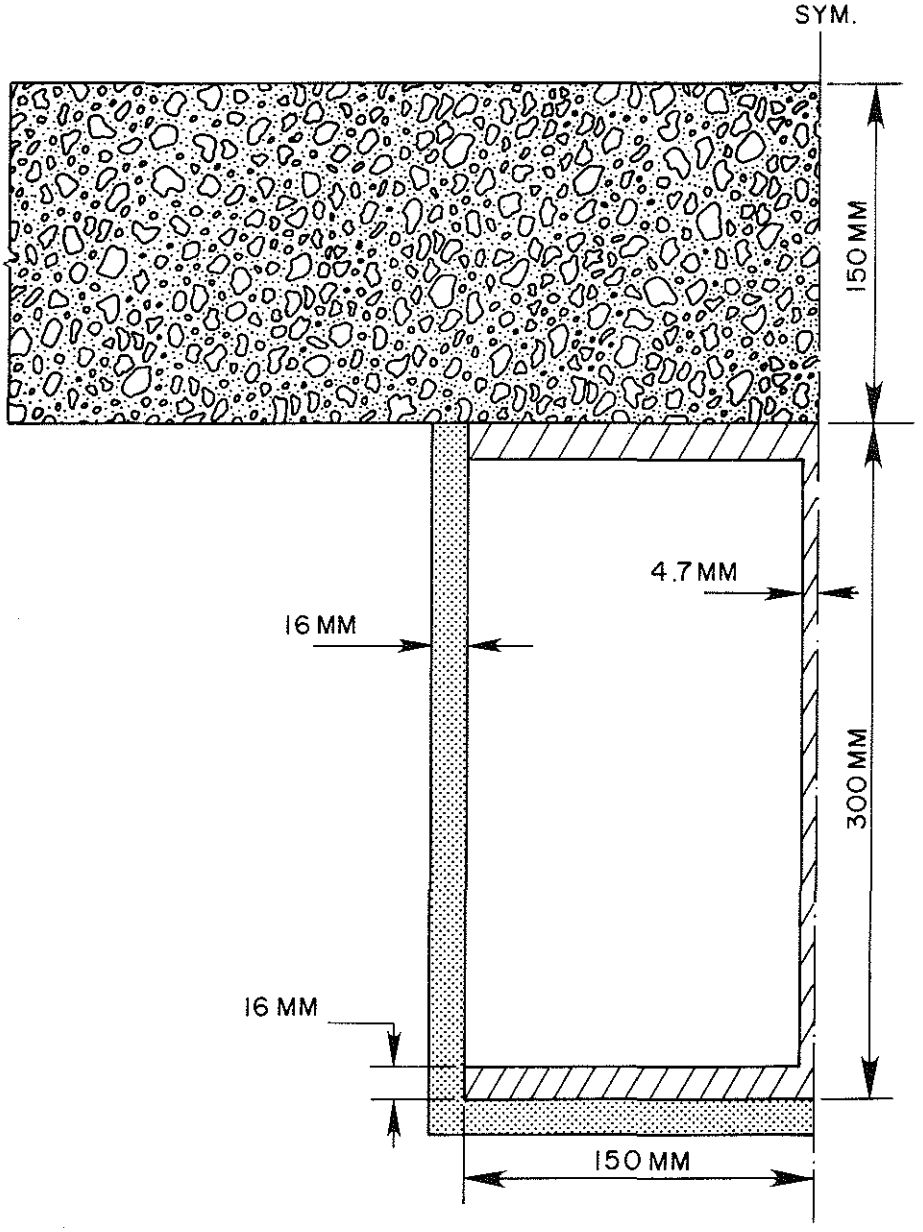

Figure 5.4. Dimensions of concrete slab, steel beam, and gypsum board insulation

the steel and gypsum board were assumed to be 0.8 and 0.9, respectively. Time-temperature histories for the center of the top and bottom flange surfaces and the effective air temperature are shown in Figure 5.5, and the temperature distribution along a line of symmetry through the web at selectec times is shown in Figure 5.6. Due to the cooling

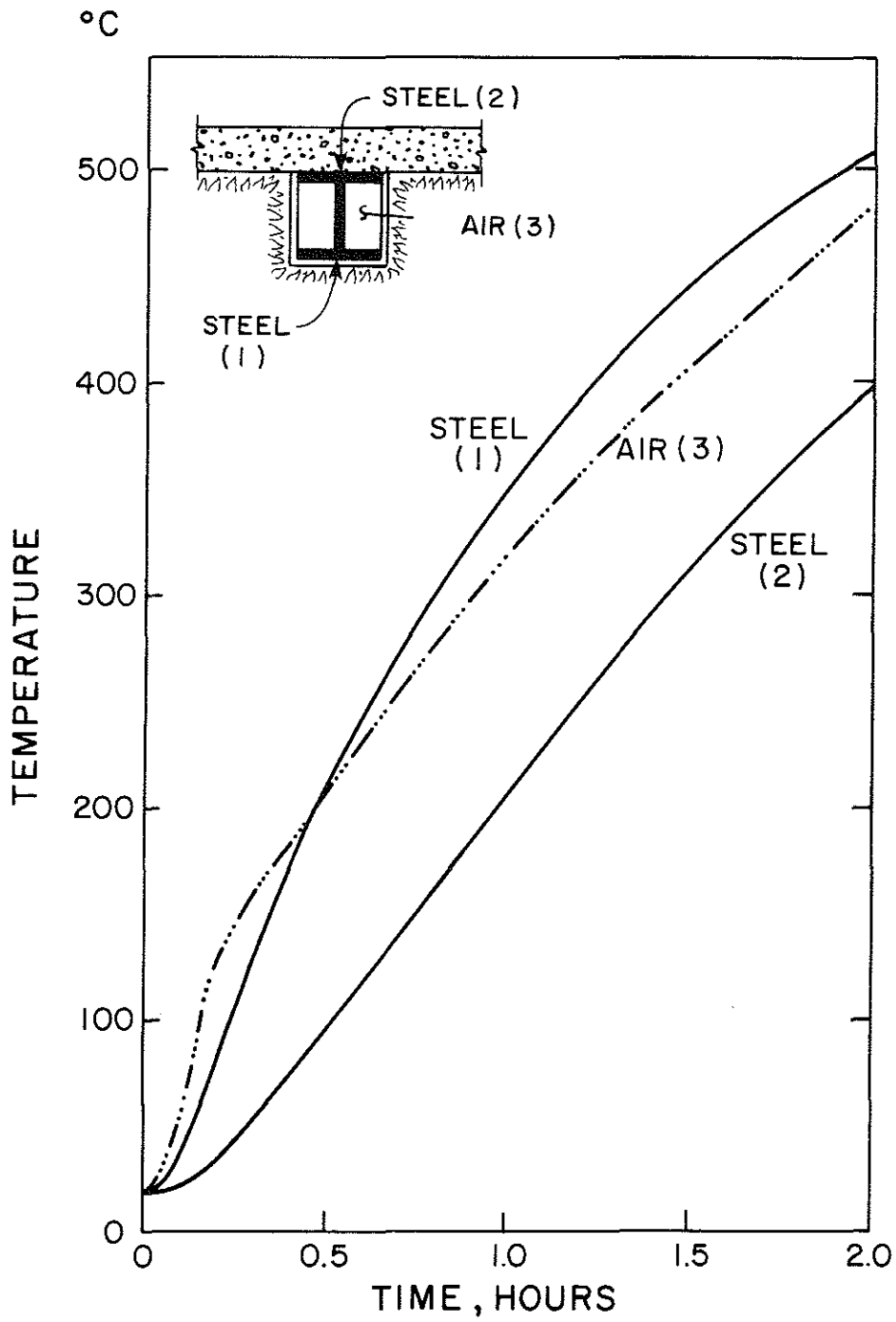

Figure 5.5. Temperature histories for selected points

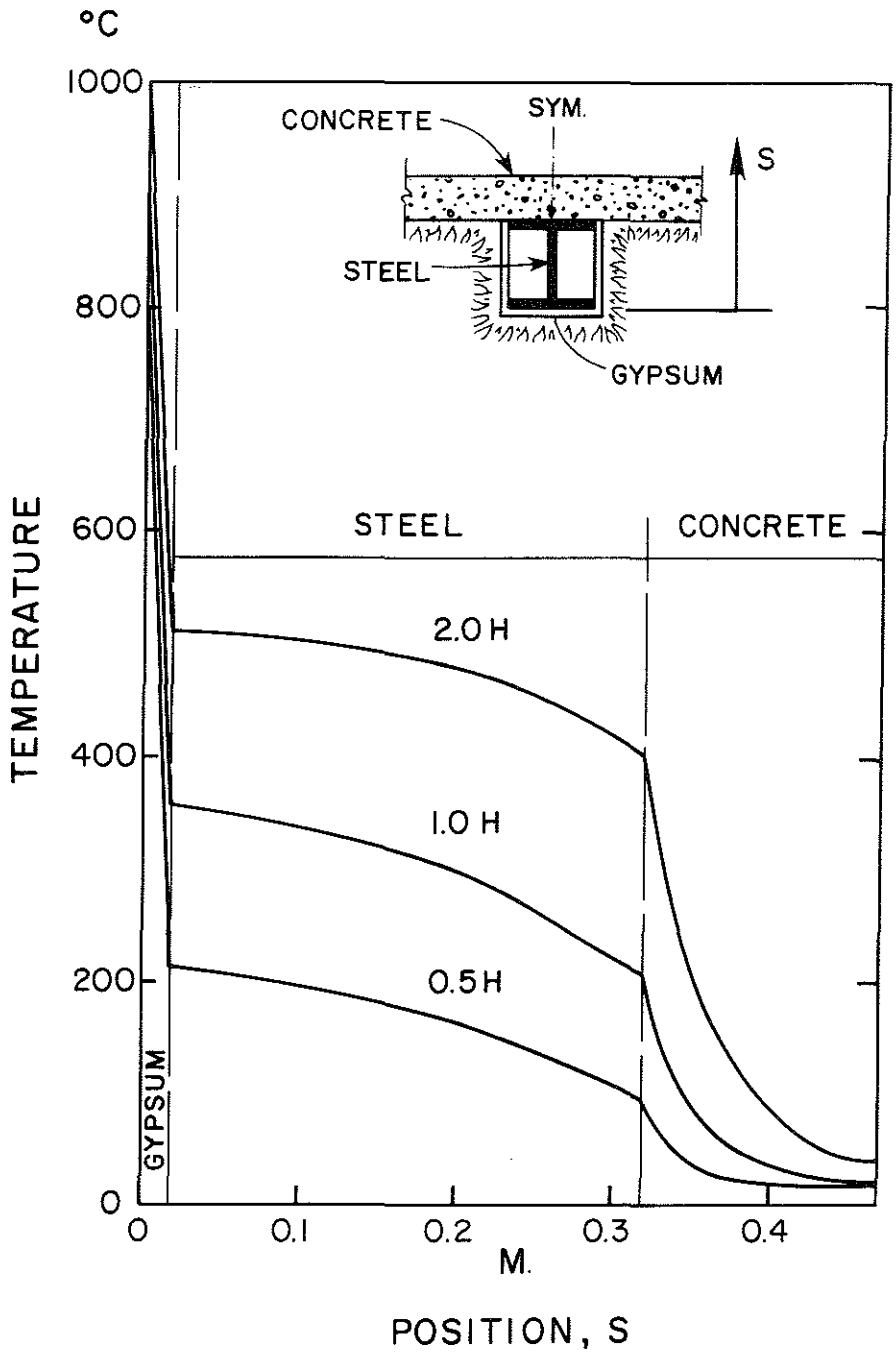

Figure 5.6. Temperature distribution along a line of symmetry at selected times

effect of the concrete slab at the top of the beam, the difference between the temperature at the top and bottom flange was considerable. The temperature distribution in the web was concave upwards due to radiation from the inside surface of the insulation at the void.

5.3 Example 3 - Hollow Core Concrete Slab Element

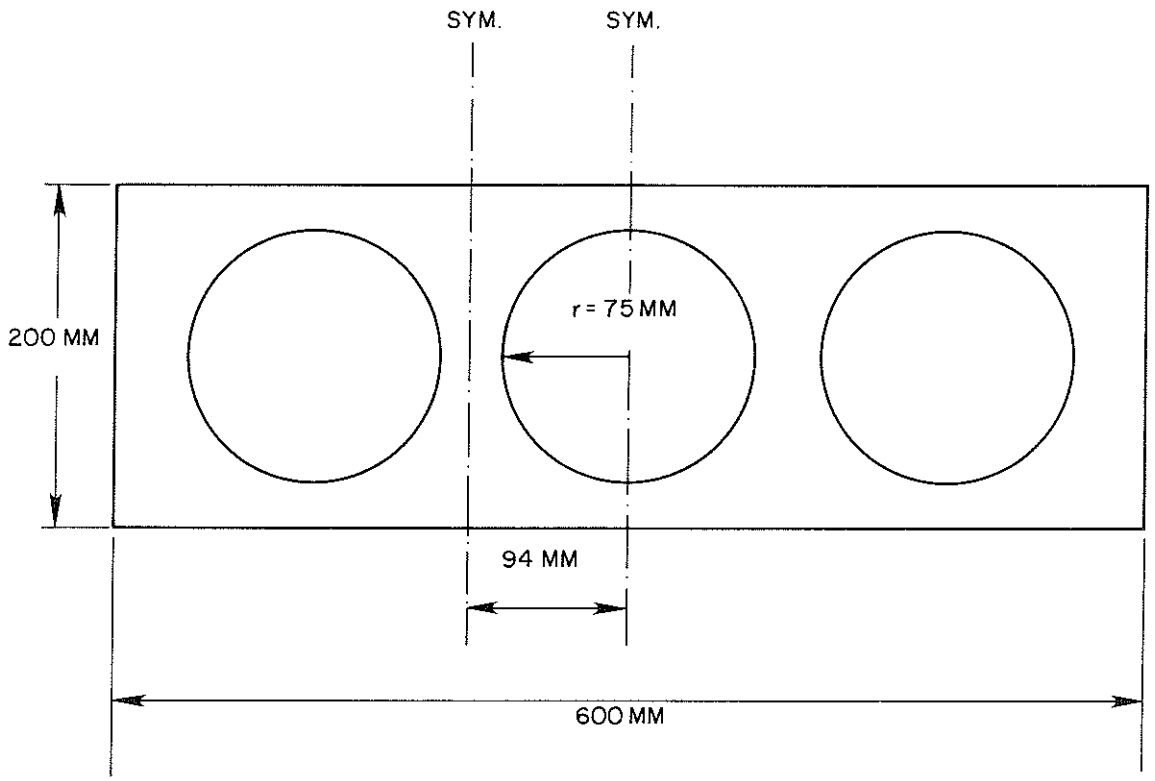

Figure 5.7. Dimensions of hollow concrete slab element (Abrams)

In [13], Abrams reported on tests of hollow core concrete slab elements (Figure 5.7) exposed to the ASTM E-119 fire in which the temperature of strands located on centerlines between voids 37 mm from the fire-exposed surface was measured. An area between two lines of symmetry was divided into finite elements (Figure 5.8). The emissivity of the interior concrete enclosure was assumed to be 0.9. The ASTM E-119 fire time-temperature curve together with the temperature history at two points on the enclosure surface is shown in Figure 5.9 for two cases:

(1) where heat transfer in the void was considered, and
(2) where heat transfer in the void was not considered, and the void was assumed to be a perfect insulator.

Predicted response for the two cases differed considerably particularly when the temperature level in the elements was high. When the void was assumed to be a perfect insulator,

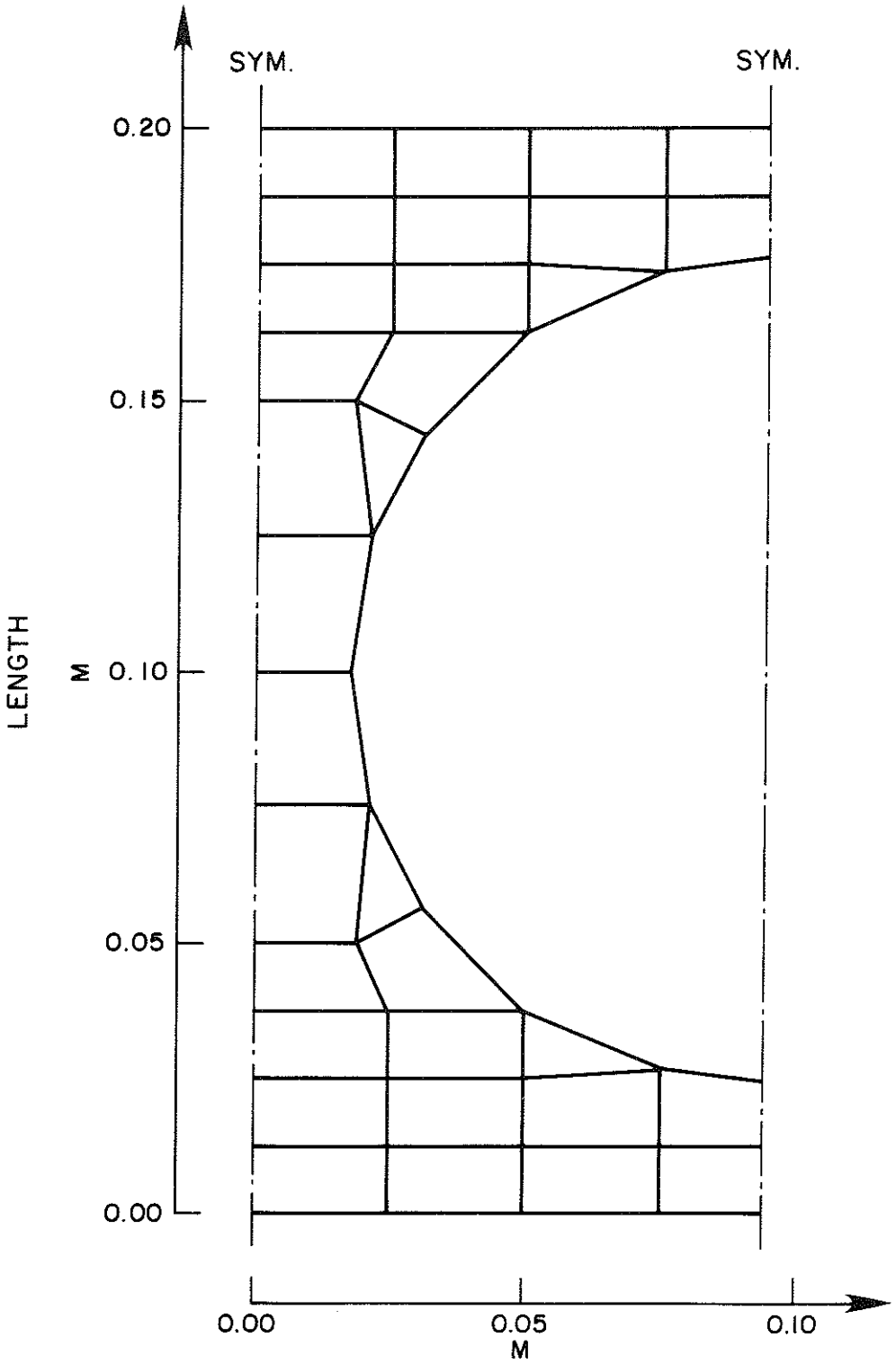

Figure 5.8. Finite element mesh for a section between two lines of symmetry of a hollow concrete slab

the difference in predicted temperature of the exposed and unexposed sides of the slab was great, while when radiation and convection was considered this difference was markedly less due to the transfer of heat through the void. Calculated and measured [13] temperature histories at one strand location were in good agreement (Figure 5.10). Calculated temperature distribution on the cooler upper surface of the slab is shown in Figure 5.11. The temperature was highest nearest the void due to the transfer of heat in the void from the lower heated side of the slab.

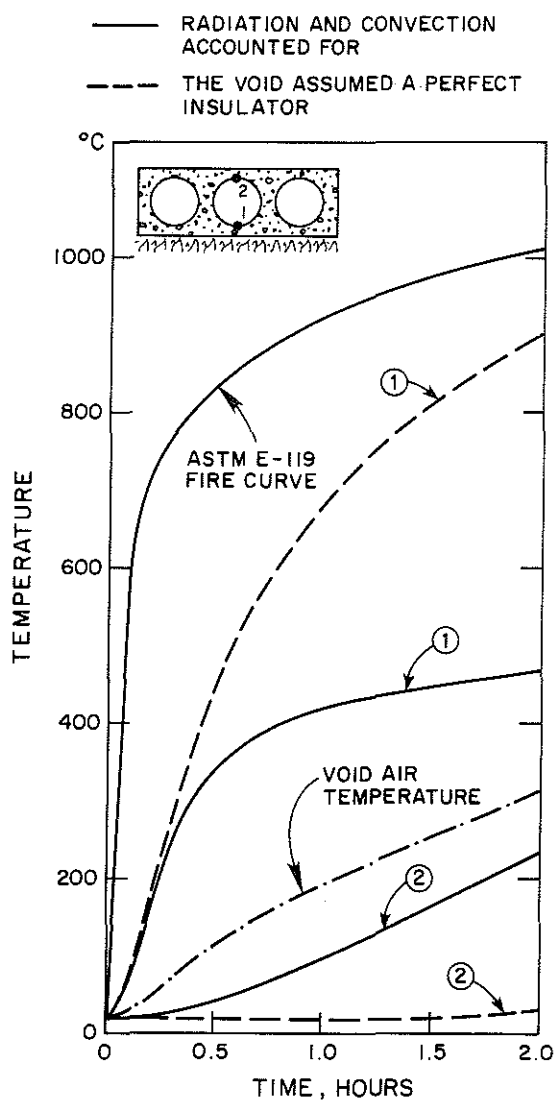

Figure 5.9. Temperature histories for points on void surface in hollow concrete slab

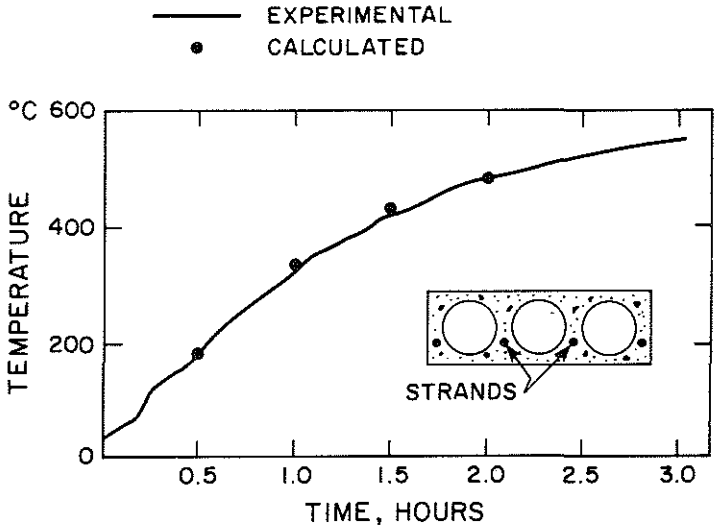

Figure 5.10. Comparison between measured and calculated temperature histories of strands (Abrams)

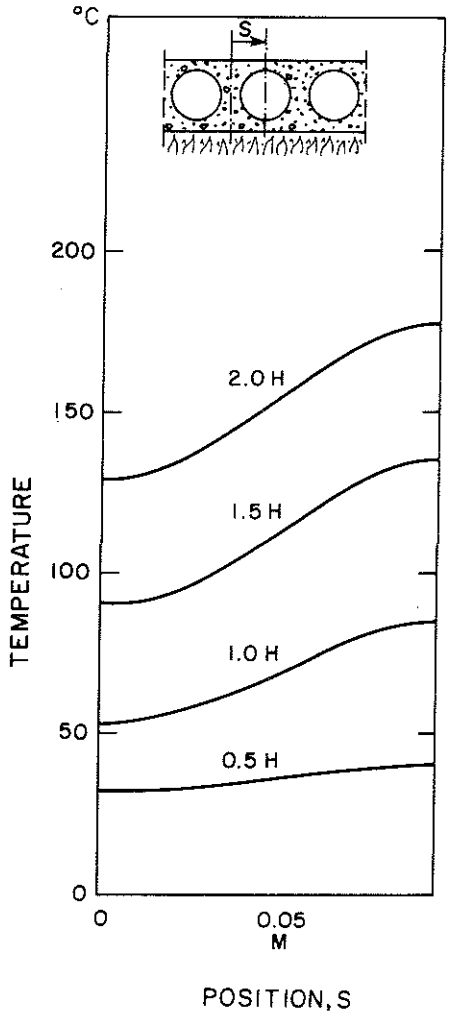

Figure 5.11. Cool surface temperature distribution of hollow concrete slab. Heat exchange in void accounted for

6. SUMMARY AND CONCLUSIONS

An increasing number of structures and structural assemblages are designed with voids. Because such voids often separate structural elements from fire protection, it is essential that heat exchange between the enclosure surfaces can be analyzed. With the theory and algorithm described here, the thermal response of such structures can be analyzed with an accuracy comparable to that of approximations of heat conduction in solids based on the finite element or finite difference methods.

The computer routines developed can easily be coupled to most finite element programs. By using geometry data already specified for the finite element mesh of a solid, view factors can be calculated automatically for most void configurations. The additional computational expense of considering heat transfer in voids is normally a small fraction of the total cost of calculating solid state heat conduction alone.

While the analysis described here provides highly accurate results for radiation heat exchange in a void, it was necessary to make major simplifying assumptions to model convection heat exchange. However, since convection heat exchange accounts for only a small part of the total heat exchange in a void for the conditions considered here, the approximations were deemed acceptable.

In the algorithm developed for radiation heat exchange, the surfaces constituating the enclosure of a void need not be assigned the same value of emissivity. As is the case with the finite element method, the accuracy of calculations increases with decreasing size of the zones into which the surface surrounding a void is divided. An exact solution can, in fact, be obtained provided that the finite element mesh used in the analysis is sufficiently fine.

NOMENCLATURE

A	area
$\underline{C}$	heat capacity matrix
$\underline{E}$	radiation matrix
F	view factor
H	modified convection factor
$\underline{H}$	convection matrix
$\underline{K}$	heat conduction matrix
L	length
N	number of nodes and zones around a void
T	absolute temperature
$\underline{T}$	vector of nodal temperature
Q	rate of heat flow
$\underline{X},\underline{Y}$	dummy matrices
q	heat flow
β	convection factor
γ	convection power
ε	emissivity
η	modified temperature
$\underline{\eta}$	vector of modified nodal temperature at enclosure surface
σ	Stefan-Boltzmann constant

Subscripts

air	enclosed air
c	convection
f	fire
r	radiation, resultant
s	surface
v	void

Superscript

*	nodal quantity

REFERENCES

[1] Becker, J., Bizri, H. and Bresler, B., "FIRES-T - A Computer Program for the FIre REsponse of Structures - Thermal", Report No. UCB FRG 74-1, Fire Research Group, Department of Civil Engineering, University of California, Berkeley, 1974.

[2] Polivka, R. and Wilson, E.L., "Finite Element Analysis of Nonlinear Heat Transfer Problems", Report No. UC SESM 76-2, Division of Structural Engineering & Structural Mechanics, Department of Civil Engineering, University of California, Berkeley, 1976.

[3] Ödeen, K., "Fire Resistance of Concrete Double T Units", Acta Polytechnica Scandinavica, Ci 48, Stockholm, 1968.

[4] Barthelemy, B., "Heating Calculation of Structural Steel Members", Journal of the Structural Division, ASCE, Vol. 102, ST8, Proc. Paper 12303, August 1976, pp. 1549-1558.

[5] Lie, T. and Harmathy, T., "A Numerical Procedure to Calculate the Temperature of Protected Steel Columns Exposed to Fire", Fire Study No. 28, Division of Building Research, National Research Council of Canada, Ottawa, Canada, 1972.

[6] Lie, T., "Temperature Distributions in Fire-Exposed Building Columns", Journal of Heat Transfer, February 1977, pp. 113-119.

[7] Thor, J., "Strålningspåverkan på oisolerade eller undertaksisolerade stålkonstruktioner vid brand (Effect of Radiation during a Fire on Steel Structures with no Insulation or Insulation in the Form of a Suspended Ceiling)", Bulletin 29, Division of Structural Mechanics and Concrete Construction, Lund Institute of Technology, Lund, Sweden, 1972 (in Swedish).

[8] Pettersson, O., Magnusson, S.E. and Thor, J., "Fire Engineering Design of Steel Structures", Bulletin 52, Division of Structural Mechanics and Concrete Construction, Lund Institute of Technology, Lund, Sweden, 1976.

[9] Wickström, U., "A Numerical Procedure for Calculating Temperature in Hollow Structures Exposed to Fire", Report No. UCB FRG 77-9, Fire Research Group, Department of Civil Engineering, University of California, Berkeley, 1977.

[10] Holman, J.P., Heat Transfer, 4th edition, McGraw-Hill Book Company, New York, 1976.

[11] Hottel, H.C., "Radiant Heat Transmission", in Heat Transmission, ed. W.H. McAdams, 3rd edition, McGraw-Hill Book Company, New York, 1954.

[12] Siegel, R. and Howell, J., Thermal Radiation Heat Transfer, McGraw-Hill Book Company, New York, 1972.

[13] Abrams, A., "Fire Tests on Hollow-Core Specimens with and without Roof Insulation", PCI Journal, January/February 1976, pp. 40-49.

PERSTORPS TRYCKERI