LUND UNIVERSITY

Heat loss to the ground from a building : slab on the ground and cellar

Hagentoft, Carl-Eric

1988

Link to publication

Citation for published version (APA):
Hagentoft, C.-E. (1988). *Heat loss to the ground from a building : slab on the ground and cellar*. [Doctoral Thesis (monograph), Division of Building Physics]. Byggnadsfysik LTH, Lunds Tekniska Högskola.

Total number of authors:
1

General rights
Unless other specific re-use rights are stated the following general rights apply:
Copyright and moral rights for the publications made accessible in the public portal are retained by the authors and/or other copyright owners and it is a condition of accessing publications that users recognise and abide by the legal requirements associated with these rights.
• Users may download and print one copy of any publication from the public portal for the purpose of private study or research.
• You may not further distribute the material or use it for any profit-making activity or commercial gain
• You may freely distribute the URL identifying the publication in the public portal

Read more about Creative commons licenses: https://creativecommons.org/licenses/

Take down policy
If you believe that this document breaches copyright please contact us providing details, and we will remove access to the work immediately and investigate your claim.

LUND UNIVERSITY

PO Box 117
221 00 Lund
+46 46-222 00 00

HEAT LOSS TO THE GROUND FROM A BUILDING

SLAB ON THE GROUND AND CELLAR

Carl-Eric Hagentoft

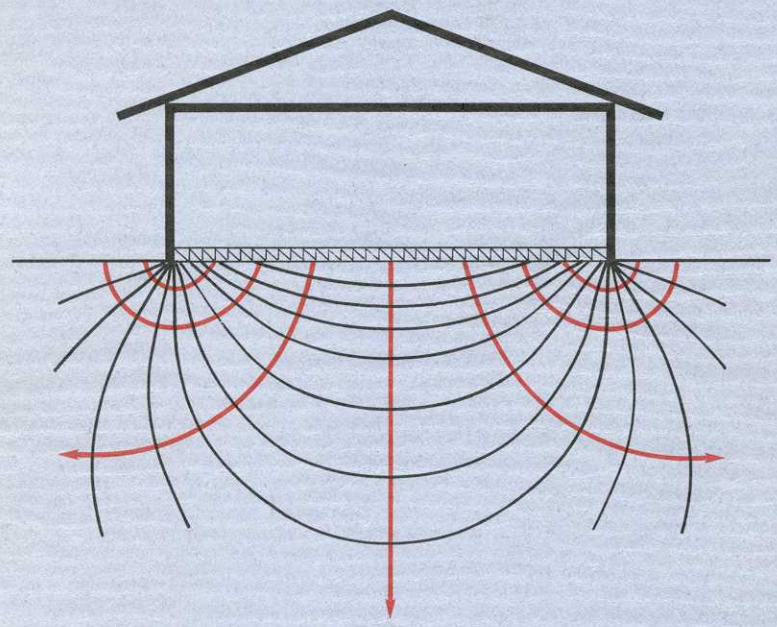

April 1988

Department of Building Technology
Report TVBH-1004
Lund Institute of Technology, Sweden

CODEN:LUTVDG/(TVBH-1004)/1-216/(1988)

HEAT LOSS TO THE GROUND FROM A BUILDING.

SLAB ON THE GROUND AND CELLAR.

Carl-Eric Hagentoft

CONTENTS

PREFACE vii

NOTATIONS ix

Part A: GENERAL THEORY

1 INTRODUCTION **1**
- 1.1 Background . . . 1
- 1.2 Types of foundations . . . 1
- 1.3 Problems and complications . . . 2
- 1.4 Literature survey . . . 3
- 1.5 Scope and limitations . . . 6
- 1.6 Two examples . . . 6
- 1.7 Reference cases . . . 9

2 HEAT TRANSFER IN THE GROUND **11**
- 2.1 Heat conduction equation . . . 11
- 2.2 Heat loss . . . 11
- 2.3 Numerical technique . . . 12

3 BOUNDARY AND INITIAL CONDITIONS **13**
- 3.1 Steady-state approximation for the heat flow through an insulating layer . . . 13
  - 3.1.1 Step change of the boundary temperature . . . 13
  - 3.1.2 Periodic boundary temperature . . . 15
- 3.2 Boundary condition at the building . . . 16
- 3.3 Boundary condition at the ground surface . . . 17
- 3.4 Initial condition . . . 18

4 SUPERPOSITION AND FUNDAMENTAL SOLUTIONS **19**
- 4.1 Principle of superposition . . . 19
- 4.2 Fundamental thermal processes . . . 21
- 4.3 The temperature expressed by fundamental solutions . . . 23
  - 4.3.1 Steady-state and periodic solutions . . . 23
  - 4.3.2 Steady-state and step-change solutions . . . 24
  - 4.3.3 Temperature represented by three fundamental solutions . . . 25
- 4.4 Equations for the steady-state solution . . . 26
- 4.5 Equations for the periodic solutions . . . 26
  - 4.5.1 Complex notations . . . 26
  - 4.5.2 Equations . . . 28
- 4.6 Equations for the step-change solutions . . . 30

5 DIMENSIONLESS FORMULATION 31
5.1 Steady-state process . . . 31
5.1.1 Detailed scaling for the slab . . . 31
5.1.2 General scaling . . . 32
5.2 Periodic process . . . 33
5.3 Step-change process . . . 34

6 RANGE OF TEMPERATURE INFLUENCE 37
6.1 Undisturbed ground . . . 37
6.1.1 Periodic solution . . . 38
6.1.2 Step-change solution . . . 39
6.2 Penetration of outdoor temperature under the slab . . . 39
6.2.1 Periodic solution . . . 39
6.2.2 Step-change solution . . . 41
6.3 Indoor temperature variation under the slab . . . 43
6.3.1 Periodic solution . . . 43
6.3.2 Step-change solution . . . 44
6.4 Cellar wall . . . 46
6.4.1 Periodic solution . . . 46
6.4.2 Step-change solution . . . 47
6.5 Cellar floor . . . 49
6.5.1 Periodic solution . . . 49
6.5.2 Step-change solution . . . 49

7 EDGE APPROXIMATIONS 51
7.1 Periodic solution . . . 51
7.2 Step-change solution . . . 52
7.3 Three-dimensional corner effects . . . 54

Part B: SLAB ON THE GROUND

8 STEADY-STATE HEAT LOSS 59
8.1 Heat loss factor for a rectangular slab . . . 59
8.2 Approximation from the theory of optimal insulation . . . 65
8.3 Heat flow along circular arcs . . . 66
8.3.1 Edge of a long slab . . . 67
8.3.2 Long slab of finite width . . . 68
8.4 Two-dimensional case . . . 70
8.4.1 Constant insulation thickness . . . 70
8.4.2 A few cases with edge insulations . . . 70
8.5 Dependence of the shape . . . 75
8.5.1 Heat loss factor for constant area . . . 75
8.5.2 Circular slab . . . 77
8.5.3 Circular versus quadratic shape . . . 77
8.5.4 A few other shapes . . . 77
8.6 Edge effects . . . 81

9 PERIODIC HEAT LOSS 85
9.1 Heat loss factor for an edge . . . 85
9.2 General heat loss formula . . . 91
9.3 A few examples and analyses . . . 94
9.3.1 Variation of the period time t_0 . . . 94
9.3.2 Variation of the thermal properties of the ground . . . 94
9.3.3 Thermal resistance at the ground surface . . . 95

10 STEP CHANGE OF OUTDOOR TEMPERATURE 99
10.1 Heat loss factor for an edge . . . 99
10.1.1 Heat loss factor h_t^0 . . . 99
10.1.2 Accumulated heat loss factor e_t^0 . . . 100
10.1.3 Thermal resistance at the ground surface . . . 102
10.2 Approximate heat loss formula for short and long times . . . 104
10.3 Piece-wise constant outdoor temperature . . . 106
10.3.1 Heat loss formula using the edge approximation . . . 106
10.3.2 Single pulse . . . 107

11 THERMAL BUILD-UP 113
11.1 Heat loss for a rectangular slab . . . 113
11.2 Heat loss for short times . . . 117
11.2.1 One-dimensional approximation . . . 117
11.2.2 Edge heat loss . . . 118

12 VARIABLE INDOOR TEMPERATURE 123
12.1 Periodic indoor temperature . . . 123
12.1.1 One-dimensional approximation . . . 123
12.1.2 Edge heat loss . . . 124
12.2 Step change of the indoor temperature . . . 128

13 DISCUSSION OF SIMPLIFICATIONS 133
13.1 Groundwater . . . 133
13.2 Freezing of the ground . . . 135
13.3 Snow . . . 137
13.4 Stratified ground . . . 140
13.5 Slab with reinforced edges and underlying thermal insulation . . . 142

14 DESIGN RULES 145
14.1 Outdoor temperature . . . 145
14.2 Heat loss during heating season . . . 145
14.3 Peak effect during the winter . . . 146
14.4 Comments . . . 147
14.5 PC-program for the design rules . . . 148

15 EXAMPLES 151
15.1 Total heat loss for the reference cases . . . 151
15.2 Comparison with the Swedish building code . . . 155
15.2.1 Heat loss . . . 155
15.2.2 Steady-state heat loss . . . 155
15.2.3 Accumulated heat loss during heating season . . . 157
15.2.4 Peak effect . . . 158

Part C: CELLAR

16 STEADY-STATE HEAT LOSS **159**
16.1 Heat loss factor 159
16.2 Approximation for a well-insulated cellar 162
16.3 Cellar with totally insulated wall 163
16.3.1 Approximations for small and large values of d 164
16.3.2 General approximation for a cellar with totally insulated wall 166
16.4 Wall component Q_{s2} 167
16.4.1 Edge approximation 168
16.4.2 Edge approximation for well insulated cellar walls 171
16.5 General approximation for Q_s 172

17 PERIODIC HEAT LOSS **173**
17.1 Heat loss factor for an edge 173
17.2 Infinitely deep cellar 177
17.2.1 Heat loss factor 177
17.2.2 Heat loss factor for a wall segment 179
17.3 Heat flow through the floor 179
17.4 Approximation for deep cellars 183
17.5 Approximation for shallow cellars 184
17.6 General approximation for Q_p 186
17.7 Correction for surface resistance 187

18 STEP CHANGE OF OUTDOOR TEMPERATURE **189**
18.1 Heat loss factor for an edge 189
18.2 Infinitely deep cellar 193
18.2.1 Heat loss factor 193
18.2.2 Heat loss factor for a wall segment 194
18.3 Heat loss through the floor 197
18.3.1 Approximate formula 197
18.4 Approximation for deep cellars 198
18.5 Approximation for shallow cellars 199
18.6 Approximate edge heat loss formula 200

19 DESIGN RULES **203**
19.1 Outdoor temperature 203
19.2 Heat loss during heating season 203
19.3 Peak effect during the winter 204
19.4 PC-program for the design rules 205
19.5 Total heat loss for the reference cases 207

REFERENCES **213**

PREFACE

The report is divided into three parts: general theory, slab on the ground, and cellar. Part A (general theory) gives the governing equations, the boundary conditions, and the initial conditions for the thermal process in the ground. Dimensional analysis, superposition technique, and a number of fundamental thermal processes are introduced. The range of temperature influence under the foundation of the building is studied. Finally, the edge approximation is introduced. Part B deals with the heat loss for the slab on the ground, and Part C deals with the cellar case.

This work has been initiated by Dr. Johan Claesson at the Department of Building Technology in Lund. His support, constructive criticism, and insatiable insistence on accuracy have been of great value.

I want to express my gratitude to Nils Olof Wallin, who carried out the original Wiener-Hopf solutions for the basic heat loss problems given in Chapter 9 and 10. I also want to thank Lilian Johansson, who drew the figures.

The project has been financed by the Swedish Council of Building Research, as a part of a grant to the Building Physics Group at our department.

Lund, April, 1988

Carl-Eric Hagentoft

NOTATIONS

Symbol	Defining equation	Definition, (dimension)
a		Thermal diffusivity of the ground (m^2/s)
A		Area of the foundation (m^2)
B		Width of the building (m)
C	λ/a	Volumetric heat capacity of the ground (J/m^3K)
d	$d_i\lambda/\lambda_i$	Equivalent thermal insulation thickness of the floor (m)
d_i		Thermal insulation thickness of the floor (m)
d_{iw}		Thermal insulation thickness of the wall (m)
d_{snow}		Thickness of snow layer (m)
d_w	$d_{iw}\lambda/\lambda_{iw}$	Equivalent thermal insulation thickness of the wall (m)
d_0	$\sqrt{at_0/\pi}$	Outdoor periodic penetration depth (m)
d_1	(3.19),(3.22)	Equivalent insulation thickness of the thermal resistance at the ground surface (m)
d_3	$\sqrt{at_3/\pi}$	Indoor periodic penetration depth (m)
$\tilde{d}$	Fig. 8.22	Equivalent insulation thickness for the extra thermal insulation at the edges of the building (m)
D	Fig. 8.22	Width of the extra thermal insulation at the edges (m)
e_t	(5.29)	Accumulated heat loss factor (-)
e_{tb}	(5.38)	Accumulated heat loss factor for thermal build-up (-)
e_t^0	(10.6)	Basic accumulated step-change heat loss factor for a slab without thermal resistance at the ground surface (-)
$\mathrm{erfc}(x)$	$\frac{2}{\sqrt{\pi}}\int_x^\infty e^{-s^2}\,ds$	Complementary error function (-)
$E(t)$	(2.6)	Accumulated heat loss to the ground (W)
E_s	$Q_s \cdot t$	Accumulated steady-state heat loss (J)
E_t	(5.29)	Accumulated heat loss for an outdoor temperature step (J)
E_{tb}	(5.36)	Accumulated heat loss for the thermal build-up (J)
E_y	(14.5),(19.5)	Accumulated heat loss during the heating season (J)
h_p	(5.20)	Outdoor periodic heat loss factor (-)
h_p^i	(17.6)	Outdoor periodic heat loss factor for an infinitely deep cellar (-)
h_p^f	(17.13)	Outdoor periodic heat loss factor for the floor heat loss of a cellar (-)
h_p^w	(17.8)	Outdoor periodic heat loss factor for the heat loss over a wall segment of an infinitely deep cellar (-)
h_p^0	(9.3)	Basic periodic heat loss factor for a slab without thermal resistance at the ground surface (-)
h_p^1	(9.6)	Basic periodic heat loss factor for a slab with thermal resistance at the ground surface (-)

Symbol	Defining equation	Definition, (dimension)
h_{pe}^0	(12.10)	Basic periodic edge heat loss factor for a slab without thermal resistance at the ground surface (-)
h_{pe}^1	(12.16)	Basic periodic edge heat loss factor for a slab with thermal resistance at the ground surface (-)
h_s	(5.11)	Steady-state heat loss factor (-)
h_{s2}	(16.18)	Steady-state heat loss factor (-)
h_t	(5.24)	Outdoor step-change heat loss factor (-)
h_t^i	(18.5)	Outdoor step-change heat loss factor for an infinitely deep cellar (-)
h_t^w	(18.8)	Outdoor step-change heat loss factor for the heat loss over a wall segment of an infinitely deep cellar (-)
h_{tb}	(5.32)	Thermal build-up heat loss factor (-)
h_t^0	(10.2)	Basic step-change heat loss factor for a slab without thermal resistance at the ground surface (-)
h_t^1	(10.8)	Basic step-change heat loss factor for a slab with thermal resistance at the ground surface (-)
h_{tbe}^0	(11.15)	Basic thermal build-up edge heat loss factor for a slab without thermal resistance at the ground surface (-)
h_{tbe}^1	(11.18)	Basic thermal build-up edge heat loss factor for a slab with thermal resistance at the ground surface (-)
H		Depth to the cellar floor (m)
$H(t)$	(4.17)	Heaviside's unit step function (-)
H_w	Fig. 13.1	Depth to groundwater table (m)
ℓ	(13.5)	Scaling length for the case with groundwater flow (m)
L		Total length of the building (m)
L_e		Perimeter length of the building (m)
q_p	(5.21)	Two-dimensional outdoor periodic heat loss (W/m)
q_s	(5.14)	Two-dimensional steady-state heat loss (W/m)
q_t	(5.26)	Two-dimensional outdoor step-change heat loss (W/m)
$Q(t)$	(2.5)	Heat loss to the ground (W)
Q_p	Fig. 4.3	Three-dimensional outdoor periodic heat loss (W)
Q_{pi}	Fig. 4.4	Three-dimensional indoor periodic heat loss (W)
Q_s	Fig. 4.2	Three-dimensional steady-state heat loss (W)
$\tilde{Q}_s$	Fig. 8.22	Steady-state heat loss for a slab with extra edge insulation (W)
Q_t	Fig 4.5	Three-dimensional outdoor step-change heat loss (W)
Q_{tb}	Fig 4.7	Three-dimensional thermal build-up heat loss (W)
Q_{ti}	Fig 4.6	Three-dimensional indoor step-change heat loss (W)
t		Time (s)
t_a		Start time for heating season (s)
t_b		Stop time for heating season (s)
t_s		Start time for temperature pulse (s)
t_0	Fig. 4.3	Time period for outdoor periodic temperature (s)
t_1	Fig. 14.1	Start time for cold spell (s)
t_2	Fig. 14.1	Duration of cold spell (s)

Symbol	Defining equation	Definition, (dimension)
t_3	Fig. 4.4	Time period for indoor periodic temperature (s)
T		Temperature in the ground (°C)
T_i		Mean value of the indoor temperature (°C)
T_{in}		Indoor temperature (°C)
T_{out}		Outdoor temperature (°C)
T_0		Annual mean value of the outdoor temperature (°C)
T_1		Amplitude for the outdoor periodic temperature (°C)
T_2		Magnitude of outdoor temperature step (°C)
T_3		Amplitude for the indoor periodic temperature (°C)
T_4		Magnitude of indoor temperature step (°C)
$\hat{T}$	(4.28)	Complex-valued temperature amplitude (°C)
U		Dimensionless temperature (-)
x		Horizontal coordinate (m)
y		Horizontal coordinate (m)
z		Vertical coordinate (m)
x'		Scaled horizontal coordinate (-)
y'		Scaled horizontal coordinate (-)
z'		Scaled vertical coordinate (-)
α		Heat transfer coefficient at the ground surface (W/m^{2}K)
ϕ_p	$-\frac{1}{2\pi}\arg(h_p)$	Phase delay of the heat loss (-)
ϕ_p^0	(9.2)	Phase delay of the heat loss for a slab without thermal resistance at the ground surface (-)
ϕ_p^1		Phase delay of the heat loss for a slab with thermal resistance at the ground surface (-)
λ		Thermal conductivity of the ground (W/mK)
λ_i		Thermal conductivity of the thermal insulation of the floor (W/mK)
λ_{iw}		Thermal conductivity of the thermal insulation of the wall (W/mK)
λ_{snow}		Thermal conductivity of the snow (W/mK)

Part A

GENERAL THEORY

Chapter 1

INTRODUCTION

1.1 BACKGROUND

Heated buildings induce a heat flow from the building foundation into the ground. The topic of this thesis is the thermal process in the ground and, in particular, the heat losses from the building to the ground. Foundations of the two types slab on the ground and cellar are dealt with.

The heat loss from various parts of the building has attracted a greater interest since the oil crises in the early 70's. The heat loss to the ground is the least known part of the total transmission heat loss of the building. Houses built today have better insulated walls and roofs, and they are more airtight. The heat loss to the ground has therefore become a larger part of the total heat loss of the house.

The annual average heat loss to the ground from a one-storey residential house (100 m^2) with a foundation of the type slab on the ground lies in the range of 200-500 W for normal Swedish houses. The accumulated heat loss to the ground over a heating season lies in the range of 1000-3000 kWh. This is about 30 % of the total heat loss due to transmission.

There is a need of an accurate calculation method for the heat loss to the ground. An accurate method must account for the three-dimensional temperature process in the ground. It is of importance that the heat loss for buildings with various shapes and insulating strategies is predictable. Furthermore, the calculation method must account for the heat loss due to a time-varying outdoor temperature. The damping and time-lagging effects of the ground must be considered. So far computer simulations have been the only available method that meets these demands.

The goal and endeavour of this thesis have been to develop an accurate and manageable calculation method for heat losses to the ground. The method, which is based on both numerical calculations and analytical solutions, accounts for three-dimensional effects and the time-varying outdoor temperature in a proper way.

1.2 TYPES OF FOUNDATIONS

There are three major types of foundations: Slab on the ground, cellar and crawl-space. Many houses combine foundation types, for instance partial slab and partial cellar.

Figure 1.1. shows a building with a foundation of the type slab on the ground. There is a thermal insulation layer along the ground surface under the building. In Sweden, the slab is usually made of concrete with reinforced edges. The thermal insulation is placed above or under the concrete slab. It may cover the whole of the slab or part of it. An important case, in particular in countries with less severe climate than the Swedish one, is the slab with

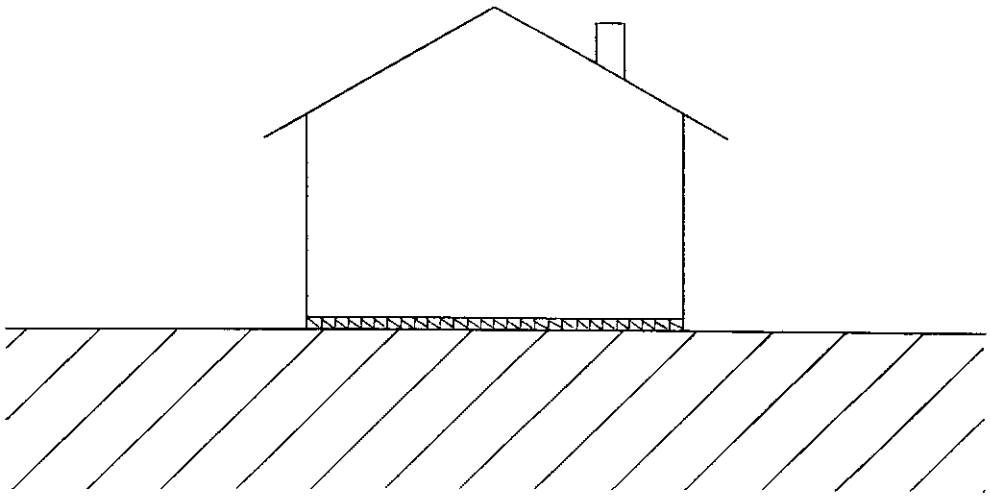

Figure 1.1: Building with foundation of the type slab on the ground.

thermal insulation along the perimeter only. This case with a perimeter insulation only is not treated in this study.

Figure 1.2 shows a building with a cellar. The cellar floor lies between one to three meters below ground level. The heat loss area is enlarged by the cellar walls. The walls are usually thermally insulated, while the cellar floor may be insulated or uninsulated.

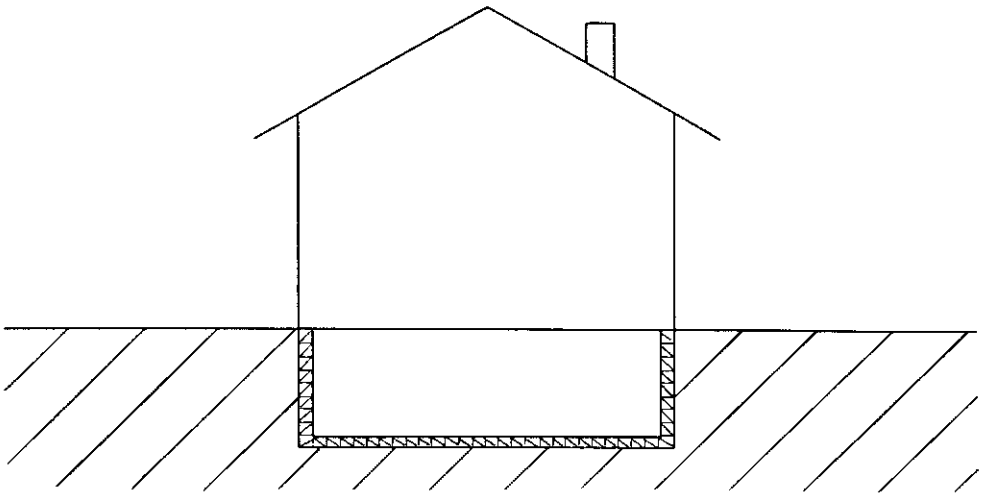

Figure 1.2: Building with a cellar.

Figure 1.3 shows a building with a crawl-space. The crawl-space is, from a thermal point of view, similar to the cellar except for the depth of the floor and the temperature above the insulation. It may be ventilated by outdoor air and insulated at the ceiling, or ventilated by indoor air and insulated at the ground and crawl-space walls. The crawl-space is treated in a separate report, [7], in which results from this study are used.

1.3 PROBLEMS AND COMPLICATIONS

The thermal process in the ground is complicated. The temperature field is three-dimensional and time-varying. The outdoor temperature and the heat transfer coefficient at the ground surface vary with time.

Variable insulation thickness along the foundation, and various types of geometry, introduce a large number of parameters in the heat loss problem.

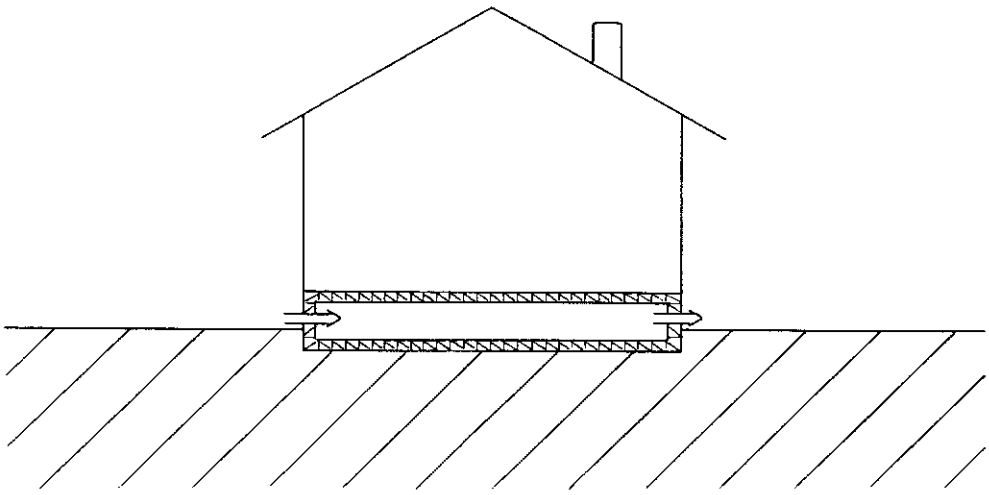

Figure 1.3: Building with a crawl-space.

The thermal properties of the ground may vary from region to region. An important case is a ground with strata of different thermal properties.

Moisture movements may influence the thermal process. Snow acts as a time-dependent thermal resistance at the ground surface. During the winter the water in the ground may freeze. In order to account for this freezing the latent heat of the ground must be considered. The thermal conductivity of the ground is usually different for frozen and unfrozen soil. Groundwater flow is often considered to be an important factor for the heat loss to the ground. In order to account for the groundwater flow, the convective heat transfer in the ground below the water table must be considered.

1.4 LITERATURE SURVEY

A large number of articles and reports on heat losses to the ground from a building has been written. The earliest articles of interest are from the 40's.

Three types of calculation methods appear in the literature. They are based on analytical solutions, numerical solutions, and measurements. The largest number of articles concerns the steady-state heat loss for the two-dimensional case with an infinitely long slab.

References [14] and [19]-[40] concern the slab on the ground. The uninsulated slab on the ground has attracted the largest interest. This case is the most common one for older buildings and buildings in countries with less severe climate than in Sweden. Some articles account for the indoor floor surface resistance. Only a few articles treat the important case with an insulated slab. Apparently there is a need of further research on these cases.

Early experimental work on the heat loss for the slab was performed by Dill and Robinson [19] and Bareither, Fleming and Alberty [20]. They determined the heat loss through small floors insulated from each other so that the temperature field was approximately two-dimensional. The measurements were continued over a few months.

Macey [21] gave a formula for the two-dimensional steady-state case with an uninsulated slab. He tried to estimate the heat loss through the floor of a kiln, furnace or drier. He used a formula for a slab with walls of zero width. He approximated the ground temperature under the inner half of the wall to the indoor temperature, and under the outer half to the outdoor temperature. The heat loss was obtained by an integration of the heat flow between the walls of the building. The formula for the heat loss is used in the CIBS guide, [40]. This type of circular arc approximation is discussed in Section 8.3. Macey also gave correction terms for rectangular floors.

Billington [22] studied the two-dimensional steady-state heat loss for a slab with a network analyser (electrical analogue). He studied the effects of varying floor width on the heat loss.

A number of authors has used the Green's function for a semi-infinite region. Lachenbruch [23] treated the three-dimensional case with periodic surface conditions. Vuorelainen [24]-[26] considered transient boundary temperatures for two-dimensional cases.

Adamsson, Domne'r and Rönning [27] used the Lachenbruch solution for periodic boundary temperatures. The heat flow through the slab and the temperature in the ground were studied.

Muncey and Spencer [30], [31] studied the case with a surface covered by an array of rectangular slabs. The surface temperature for the slab varied periodically in time. Due to the introduced symmetry planes the problem could be solved with Fourier analysis.

Claesson and Eftring [14] developed a theory for optimal thermal insulation, i.e. how a given amount of insulation should be distributed in order to minimize the heat loss. The theory is based on calculus of variations. With the help of this theory, approximate formulæ for the heat loss was given, for which the thermal insulation capability of the ground is separated from the thermal resistance of the insulation. The accuracy of the formulæ is best for thick insulations. Formulæ are given for both slab on the ground and cellar. The theory is discussed and used in Section 8.2.

Adamsson, Claesson and Eftring [28] calculated the temperature under slabs. The frost penetration was studied by means of three-dimensional numerical calculations. Adamsson [29] continued the work by studying the floor temperature for different floor insulations.

Delsante, Stokes and Walsh [32] used Fourier transform to obtain expressions for the heat flux from uninsulated slabs. The boundary temperatures varied periodically in time. They obtained explicit expressions for the two-dimensional case and for the three-dimensional steady-state case for a rectangular slab. The temperature change under the walls, at ground level, is assumed to be linear.

Kusuda, Piet and Bean [33] developed a method where the ground surface was divided into rectangular segments. The temperature of each segment varied periodically. The problem is solved by numerical integration of the Green's function solution. In [34] the Kusuda method, [33], the Delsante method, [32], and a method according to Mitalas were compared. The Mitalas method is given in [45] for the cellar case.

Bäckström, Sjölund and Wågberg [35] studied different insulating strategies of the edge of a slab. The heat loss is calculated numerically for two-dimensional steady-state cases.

Landman and Delsante [36] developed solutions for the two-dimensional steady-state case with horizontal edge insulation. The floor surface resistance and the ground surface thermal resistance may be different. The solution uses Fourier Series. A similar technique has been developed by the author in the supplementary report [5]. This solution method is discussed and used in Section 8.4. Landman and Delsante [37] also developed solutions for the two-dimensional steady-state case with vertical edge insulation. The solution does not account for surface resistances.

Delsante [38] derived an analytical expression for the two-dimensional steady-state heat loss from a slab on the ground with constant thermal resistance at the ground surface and the floor. The temperature under the wall at ground level is assumed to change linearly. A solution for the case with zero thickness of the wall is derived by the author in the supplementary report [4] for both two-dimensional and three-dimensional cases. The closed solutions are evaluated numerically and tabulated in the report.

The Swedish building code [39] gives a method for calculating the U-value for a slab. This method is analysed in Section 15.2. The slab is divided into an outer, an intermediate, and a central region. A thermal resistance for the ground is given for each region. The U-value

for the whole slab is calculated from the thermal resistance of the ground and the insulation.

There are not many studies of cellars. The references have the numbers [14], [41]-[46].

A early experimental work was performed by Houghten, Taimuty, Gutberlet and Brown [41]. They studied the heat loss for one cellar experimentally.

Boileau and Latta [42] introduced a simplified heat flow method for uninsulated cellars. The heat flow is assumed to follow circular arcs. The center of the arcs are positioned at the intersection of the ground surface and the cellar wall, and at the intersection of cellar wall and floor.

Shipp and Broderick [44] compared this simplified method with numerical calculations and found a good agreement for uninsulated cellars. For the cases with insulated cellars the result was not so satisfactory.

Bäckström [43] compared numerically calculated heat losses with heat losses obtained from simplified methods. He studied the heat loss from two types of cellars and 20 types of slabs. The results were based on numerical solutions of the steady-state heat conduction equation.

Mitalas [45] has developed a method for calculating the heat loss for cellars. The outdoor temperature is assumed to vary periodically around an annual mean outdoor temperature. He divided the cellar wall and floor into 5 segments. The thermal resistance of the soil between the segments an the outer boundaries are calculated numerically for two-dimensional steady-state conditions for 26 cases. For the steady-state part, a plane of constant temperature below the cellar floor is assumed. Formulæ for the steady-state heat loss that allow for variable areas and thermal insulations for the 5 segments are given. The method does not account for the fact that the thermal resistance of the soil changes when the insulation thickness or the area of the segments changes. A systematic study of validity and accuracy of this approach is not presented. The heat loss through the segments has one steady-state component and one periodic component. The thermal resistance of the soil for the steady-state case is given directly by the numerical calculations mentioned above. This type of approximation is studied in Section 8.1, where the thermal resistance of the soil is denoted D_m. For the periodic case the heat flows through each segment are corrected by a damping factor. The heat flow also contains a time-lag factor. Both the damping factor and the time-lag factor are constant for all 26 cases. They are determined from one numerical calculation.

Kusuda and Bean [46] uses the procedure developed by Mitalas to calculate the peak effect for U. S. climates.

1.5 SCOPE AND LIMITATIONS

Figure 1.4 shows the two basic configurations to be analyzed. The heat loss to the ground is denoted by $Q(t)$ (W).

The thickness of the thermal insulation at the floor is d_i (m), and the thermal conductivity is λ_i (W/mK). The thermal resistance at the floor d_i/λ_i (m^2K/W) is constant. For the cellar the thermal resistance at the wall d_{iw}/λ_{iw} (m^2K/W) is also constant, but it may be different from the floor resistance. The case with additional edge insulation for the slab on the ground is treated in Sections 8.4.2 and 8.6. The thermal resistance at the ground surface outside the house is constant. It is given by a surface resistance (ground to air) or snow.

The ground is assumed to be homogeneous with constant thermal conductivity λ (W/mK) and diffusivity a (m^2/s). In Section 13.4 the effect due to a stratified ground is studied. Snow acts as a time-varying thermal resistance. It is shown in Section 13.3 that it suffices, for our purpose, to use a constant resistance representing the average resistance during the year. Freezing of the ground is not accounted for. In Section 13.2 it is shown that the effect of

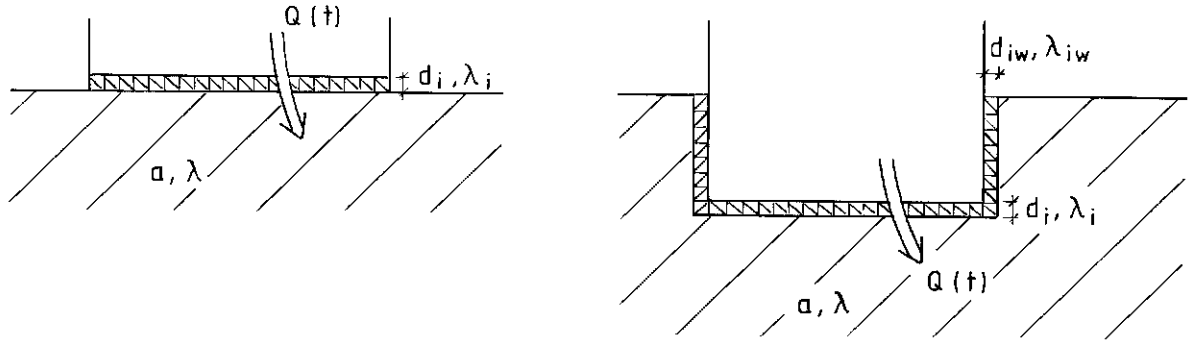

Figure 1.4: Basic configuration to be analyzed: Slab on the ground and cellar.

freezing on the heat loss is no more than a few percent. Groundwater flow underneath the house is neglected. It is shown in Section 13.1 that the error is negligible or less than a few percent except under quite extreme conditions. The effect of moisture movements and changing moisture or water content on the heat transfer and on the thermal conductivity are not considered.

A number of analytical solutions of basic thermal problems have been derived for this study. The solutions with their rather lengthy derivations are presented in separate reports. These reports, [1]-[6] and [8], are collected in a supplementary publication.

1.6 TWO EXAMPLES

Rather simple formulæ for the heat loss for slab and cellar are given in Chapters 14 and 19, respectively. In order to illustrate these final results of the thesis, two examples are given here. The first example concerns a slab on the ground, and the second one concerns a cellar.

The width B of the buildings is 8 m, and the length L is 12 m. The depth H of the cellar is 2 m. The insulation thickness d_i of the floor is 0.08 m. The insulation thickness d_{iw} of the cellar wall is also 0.08 m. The thermal conductivities λ_i and λ_{iw} of the insulations are both 0.04 W/mK. The thermal conductivity λ of the ground is 1.5 W/mK. The thermal diffusivity a of the ground is $0.75 \cdot 10^{-6}$ m^2/s.

The temperature T_i inside the buildings is 20 °C. The outdoor temperature $T_{out}(t)$ during a year is shown in Figure 1.5. This representation is a great simplification of the outdoor temperature. It will be shown that this approximation of the outdoor temperature should be quite sufficient for practical applications. The time $t = 0$ approximately corresponds to 20th April. The outdoor temperature has a sinusoidal variation with the amplitude T_1 equal to 10 °C. The annual mean value T_0 is 5 °C. During the coldest period of the winter we also have a cold spell, which gives a temperature change T_2 of -15 °C of the duration time t_2 equal to one week. The data for these two examples are those of reference cases A and D1 in Section 1.7.

Figures 1.6 and 1.7 show the heat loss for the foundations of the type slab on the ground (A) and cellar (D1). The heat losses are calculated according to formulæ (14.3-4), (14.8) and (19.3-4), (19.8) respectively. The heat loss has a periodic variation around an annual mean value. The annual mean value Q_s is equal to 427 W for the slab and 775 W for the cellar. The amplitude of the periodic heat loss Q_p is 144 W for the slab and 234 W for the cellar. The maximum contribution from the cold spell (Q_t) is 101 W for the slab and 198 W for the cellar.

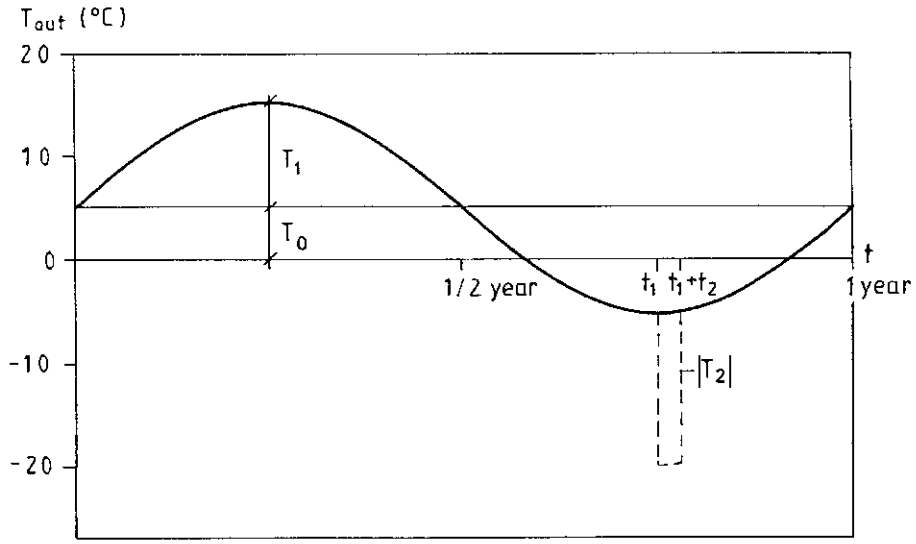

Figure 1.5: Outdoor temperature during a year for the two examples.

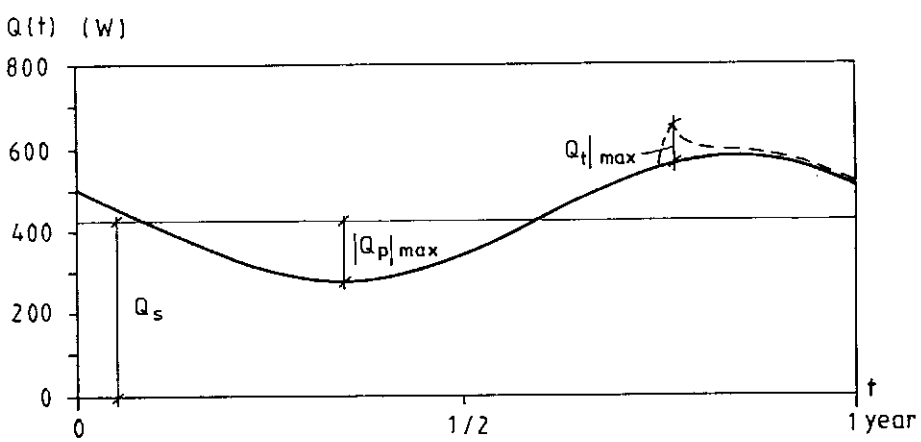

Figure 1.6: Heat loss to the ground for a building with a foundation of the type slab on the ground. Data of reference case A.

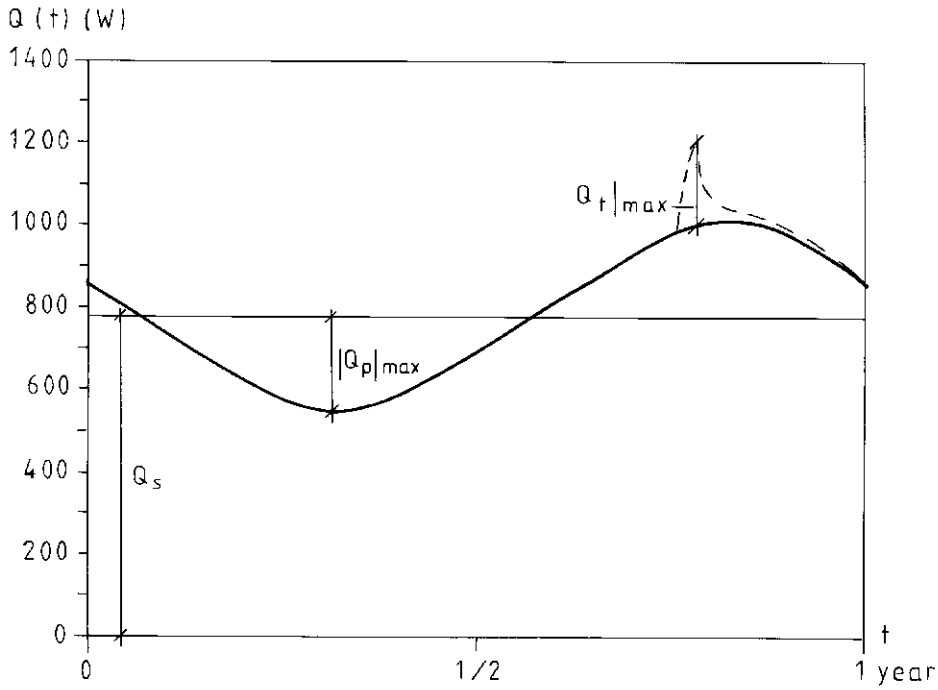

Figure 1.7: Heat loss to the ground for a building with a cellar foundation. Data of reference case D1.

1.7 REFERENCE CASES

Data for three slabs and five cellars are given below. They are referred to as *reference cases* in the coming chapters. Normal Swedish data are used.

There are three reference cases A,B and C for the slab on the ground. For A and B the slab is rectangular with the length L=12 m and the width B=8 m. The insulation thickness is 8 and 16 cm respectively. The slab given by reference case C is larger with the length 30 m and the width 15 m. The insulation thickness is 8 cm. The thermal resistance at the ground surface is zero ($d_1 = 0$).

There are five reference cases D1, D2, D3, E1 and E2 for the cellar. For reference cases D the cellars have the length 12 m, the width 8 m and the depth H=2 m. They have the same rectangular shape as cases A and B. The floor insulation varies between 0 and 8 cm. The wall insulation varies between 2.7 and 16 cm.

For Reference cases E the cellars have the length 30 m, the width 15 m and the depth 2 m. They have the same shape as case C. The floor insulation thickness is 0 or 8 cm. The wall insulation is 8 cm for both cases.

$T_i = 20°\text{C} \quad T_0 = 5°\text{C}$

$\lambda = 1.5 \text{ W/mK} \quad a = 0.75 \cdot 10^{-6}\text{m}^2/\text{s}$

$\lambda_i = 0.04 \text{ W/mK} \quad \lambda_{iw} = 0.04 \text{ W/mK} \quad (d_1 = 0)$

SLAB ON THE GROUND

Case A:	L=12 m	B=8 m	$d_i = 0.08$ m
Case B:	L=12 m	B=8 m	$d_i = 0.16$ m
Case C:	L=30 m	B=15 m	$d_i = 0.08$ m

CELLAR

Case D:	L=12 m	B=8 m	H=2 m
D1:	$d_i = 0.08$ m	$d_{iw} = 0.08$ m	
D2:	$d_i = 0$ m	$d_{iw} = 0.16$ m	
D3:	$d_i = 0.027$ m	$d_{iw} = 0.027$ m	
Case E:	L=30 m	B=15 m	H=2 m
E1:	$d_i = 0.08$ m	$d_{iw} = 0.08$ m	
E2:	$d_i = 0$ m	$d_{iw} = 0.08$ m	

Periodic outdoor temperature:

$T_1 = 10°\text{C} \qquad t_0 = 1 \text{ year} \qquad \text{sinusoidal}$

Cold spell:

$T_2 = -15°\text{C} \qquad t_2 = 1 \text{ week} \qquad t_1 = 3t_0/4$

Chapter 2

HEAT TRANSFER IN THE GROUND

2.1 HEAT CONDUCTION EQUATION

The governing equation for conductive heat flow is:

$$\frac{\partial}{\partial x}(\lambda\frac{\partial T}{\partial x}) + \frac{\partial}{\partial y}(\lambda\frac{\partial T}{\partial y}) + \frac{\partial}{\partial z}(\lambda\frac{\partial T}{\partial z}) = \nabla \cdot (\lambda \nabla T) = C\frac{\partial T}{\partial t} \tag{2.1}$$

Here λ (W/mK) is the thermal conductivity, and $C = \rho c$ (J/Km^3) is the volumetric heat capacity. The symbol $\nabla\cdot$ denotes the divergence operator.

Equation 2.1 presuppose that convective heat transfer with moving groundwater is negligible. The effect of mowing groundwater is discussed in Section 13.1, and the convective diffusive heat balance equation is given by (13.2).

The temperature $T(x, y, z, t)$ satisfies the following governing equation in a ground region with constant thermal properties:

$$\frac{\partial^2 T}{\partial x^2} + \frac{\partial^2 T}{\partial y^2} + \frac{\partial^2 T}{\partial z^2} = \nabla^2 T = \frac{1}{a}\frac{\partial T}{\partial t} \tag{2.2}$$

Here $a = \lambda/C$ (m^2/s) is the thermal diffusivity. The symbol ∇^2 denotes the Laplace operator.

2.2 HEAT LOSS

The heat flow in the ground $\vec{q}$ (W/m^2) is obtained by the law of Fourier:

$$\vec{q} = -\lambda \nabla T \tag{2.3}$$

The heat flow into the ground integrated over the foundation is of interest. Let S denote the surface of the foundation facing the ground, and let $\hat{n}$ denote the unit normal vector of the surface pointing into the ground. The heat flow into the ground at the surface of the foundation becomes:

$$q|_S = \vec{q} \cdot \hat{n} = -\lambda\frac{\partial T}{\partial n} \tag{2.4}$$

Here $\partial T/\partial n$ denotes the derivative of the temperature along the inward-drawn normal. The heat loss over the whole of the foundation, $Q(t)$ (W), becomes:

$$Q(t) = \iint_S -\lambda\frac{\partial T}{\partial n}\, dS \tag{2.5}$$

In the general case the heat loss is time-dependent. The accumulated heat loss over the foundation from t_a to t becomes:

$$E(t) = \int_{t_a}^{t} Q(t')\, dt' \qquad \text{(J)} \tag{2.6}$$

2.3 NUMERICAL TECHNIQUE

The partial differential equation of this study is solved either by a numerical method or an analytical one. The numerical method used is a finite difference method with explicit forward differences in the time domain. The method is described in detail in [10].

The error in the calculated heat losses depends on the type of problem treated. Three-dimensional cases have in general a larger error than two-dimensional ones. The error depends on the specific geometry of the problem, the grid used and the type of boundary condition. The error will be estimated for the specific cases when they arise.

Generally, the heat loss obtained by numerical calculations underestimate the heat loss, due to the fact that the grid introduces restrictions of the heat flow paths.

Several comparisons of the numerically calculated heat loss with known analytical solutions have been performed. They are not presented here in detail, since numerical simulation technique and numerical accuracy are not the topic of this study. An extensive analysis of numerical technique and numerical errors is given in [10].

The error for the three-dimensional cases is generally less than 10%. For a typical case with a rectangular slab on the ground, the error is between 2 and 5 %. The error for the two-dimensional cases is generally less than 5%. For a typical case with a cross-section of a long slab on the ground, the error is between 1 and 3 %.

The error increases with increasing temperature gradients in the ground. There have been a few cases only with somewhat larger errors than the above-mentioned. They concern cases with locally very high gradients, in particular at a corner point, at which the mathematical solution gives an infinite value of the gradient. In general the accuracy for the heat loss calculation for the slab is better than for the cellar, due to the more complex heat flow pattern in the ground outside the cellar.

Chapter 3

BOUNDARY AND INITIAL CONDITIONS

The heat transfer process in the ground is governed by the heat conduction equation (2.2), the boundary conditions at the building and at the ground surface, and the initial temperature in the ground. The boundary and initial conditions used in this study are specified and discussed in this chapter.

3.1 STEADY-STATE APPROXIMATION FOR THE HEAT FLOW THROUGH AN INSULATING LAYER

The foundation, with its various constructional details and thermal insulations, separates the ground from the interior of the building. This special region may be treated in the same way as the ground by solving the transient heat conduction equation. However, it is shown below that it is sufficient to account for the thermal resistance over the foundation. The foundation region is then replaced by a single thermal resistance, i.e. we use the one-dimensional steady-state solution only. The transient temperature process in the foundation layer is neglected. This type of approximation requires that the transients do not make any large contribution to the heat flow through the layer. The time-scale for validity of the steady-state approximation for a slab, of insulation or concrete for instance, is to be determined.

Therefore we consider a homogeneous layer of a material with the thermal conductivity λ_i (W/mK) and the volumetric heat capacity C_i (J/m^{3}K). The thickness of the layer is d_i (m). Equation 2.2 with $a{=}a_i = \lambda_i/C_i$ is valid. The one-dimensional temperature satisfies:

$$\frac{\partial^2 T}{\partial x^2} = \frac{1}{a_i}\frac{\partial T}{\partial t} \qquad 0 < x < d_i \quad t > 0 \tag{3.1}$$

3.1.1 STEP CHANGE OF THE BOUNDARY TEMPERATURE

We consider the basic case of a temperature step. The initial and boundary conditions are:

$$T(x,0) = 0 \qquad 0 < x < d \tag{3.2}$$

$$T(0,t) = T_2 \qquad T(d_i,t) = 0 \qquad t > 0 \tag{3.3}$$

The solution of the problem is well-known, [16]:

$$T(x,t) = T_2 \cdot (1 - x/d_i) - T_2 \cdot \frac{2}{\pi}\sum_{n=1}^{\infty}\frac{1}{n}\sin(\frac{n\pi x}{d_i})e^{-n^2\pi^2 a_i t/d_i^2} \tag{3.4}$$

The first part gives the steady-state solution. The last part is time-dependent, and it vanishes for large values of t. The time-scale of the transient process is of interest. The terms in the series decrease exponentially. The first term $\exp(-\pi^2 a_i t/d_i^2)$ has the slowest rate of decay. A characteristic time t_c for decay is:

$$t_c = \frac{d_i^2}{a_i \pi^2} \tag{3.5}$$

The first term in the series is reduced to 37% (e^{-1}) at $t = t_c$, and at $t = 5t_c$ it is reduced to 1%.

For an insulation material of mineral wool or fibre glass, the thermal diffusivity a_i is of the order $0.04/10^4 - 0.04/10^5 = 4.0 \cdot 10^{-6} - 4.0 \cdot 10^{-7}$ m^2/s. This gives $t_c \approx 250 - 2500$ s for an insulation layer of thickness 0.1 m. After the time $2t_c$ the first term in the series is reduced to 14 % (e^{-2}) of its initial value, and after $5t_c$ it is reduced to 1%. Thus the steady-state solution is valid with good accuracy after a few hours.

The thermal diffusivity for concrete is around $0.5 \cdot 10^{-6}$, and around $0.1 \cdot 10^{-6}$ for wood. The thermal diffusivity, and thereby the time-scale, are approximately of the same magnitude for concrete elements, wood and mineral wool.

So far we have assumed constant temperatures at the two boundaries of the layer for $t > 0$. However for a transient temperature process, the ground temperature below the insulation is not constant. It is slowly tending to steady-state conditions. In order to illustrate this complication we have studied a unit-step for a one-dimensional case with a layer of mineral wool on the ground. The heat flow into the ground q (W/m^2) is calculated numerically for two cases. Figure 3.1 shows the two cases. For the first case, the heat conduction equation is solved both for the ground and the insulation layer. The characteristic time t_c for the insulation layer is 2.8 hours. For the second case, we assume steady-state conditions in the insulation, i.e. it is treated as a surface resistance with the thermal resistance d_i/λ_i (m^2K/W). The heat conduction equation is solved for the ground only. The heat flows are given in Table 3.1.

t (hours)	0	1	2	3	4	5	7	14	21	28
q (W/m^2),left	0.000	0.005	0.050	0.119	0.182	0.231	0.293	0.348	0.349	0.345
q (W/m^2),right	0.400	0.389	0.385	0.381	0.379	0.377	0.373	0.362	0.355	0.349
Quotient	0.000	0.013	0.130	0.312	0.480	0.613	0.786	0.961	0.983	0.989

Table 3.1: Temperature step for a thermal insulation above ground (left) and for the surface resistance approximation (right), (λ=1.0 W/mK, $a = 10^{-6}$ m^2/s).

The steady-state approximation for the layer is, with an error below 4%, valid for times larger than 14 hours for our example. This corresponds to times larger than $5t_c$.

The example and discussion above show that surface layers against the ground may be treated as thermal resistance after, say, $5t_c$. This is valid for step change of the boundary temperature. The steady-state approximation is not valid for a variable boundary temperature that varies significantly on a time-scale below $5t_c$. We have the following time-scale for the validity of the ***steady-state approximation*** of boundary layers:

$$t_{\text{steady-state}} = \frac{d_i^2}{2a_i} \tag{3.6}$$

The boundary layer is, in this approximation, represented by the thermal resistance d_i/λ_i only:

$$q \cdot \frac{d_i}{\lambda_i} = \Delta T \tag{3.7}$$

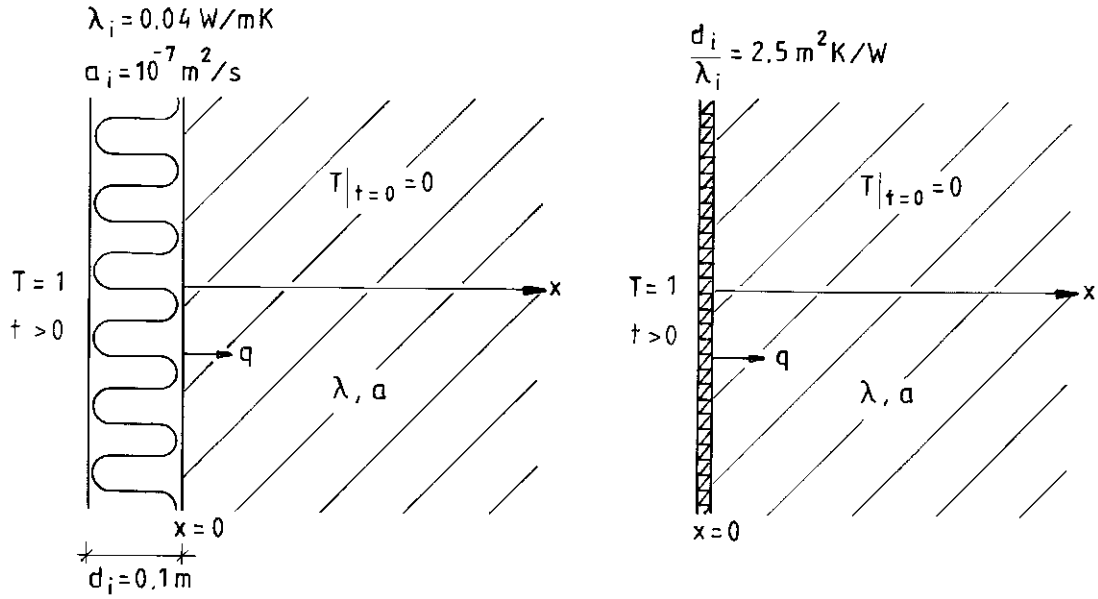

Figure 3.1: Temperature step for a thermal insulation above ground (left) and for the surface resistance approximation (right), (λ=1.0 W/mK, $a = 10^{-6}$ m^2/s).

Here, ΔT is the temperature difference over the layer.

3.1.2 PERIODIC BOUNDARY TEMPERATURE

For this case we assume that the temperature varies periodically in the whole layer. We have the following boundary temperatures:

$$\begin{aligned} T_p(0,t) &= T_1 \cdot \sin(2\pi t/t_0) \quad & t \geq 0 \\ T_p(d_i,t) &= 0 & t \geq 0 \end{aligned} \tag{3.8}$$

The solution is, [16]:

$$T_p(x,t) = \Im\left\{T_1 \cdot \frac{\sinh((1+i)(d_i - x)/d_{i0})}{\sinh((1+i)d_i/d_{i0})} e^{2\pi i t/t_0}\right\} \tag{3.9}$$

$$d_{i0} = \sqrt{\frac{a_i t_0}{\pi}}$$

The temperature is given by the imaginary part, denoted by $\Im$, of the expression in the brackets. This complex-valued formulation is examined in more detail in Section 4.5.1. The heat flow q_p at the boundaries becomes from (3.9) and (2.4):

$$q_p(0,t) = \Im\left\{T_1 \cdot \frac{(1+i)\lambda_i}{d_{i0}} \coth((1+i)d_i/d_{i0}) e^{2\pi i t/t_0}\right\}$$

$$q_p(d_i,t) = \Im\left\{T_1 \cdot \frac{(1+i)\lambda_i}{d_{i0}} \frac{1}{\sinh((1+i)d_i/d_{i0})} e^{2\pi i t/t_0}\right\} \tag{3.10}$$

A series expansion of $q_p(d_i,t)$ in $(1+i)d_i/d_{i0}$ gives:

$$q_p(d_i,t) = \frac{\lambda_i}{d_i}\Im\left\{T_1 \cdot \left(1 - ((1+i)d_i/d_{i0})^2 \cdot \frac{1}{6} + ...\right) e^{2\pi i t/t_0}\right\} \tag{3.11}$$

For small values of d_i/d_{i0} we can neglect the higher terms in the series. Thus the following *steady-state approximation* for the heat flow through the layer can be used:

$$q_p(d_i,t) \approx \frac{T_1 \cdot \sin(2\pi t/t_0) - 0}{d_i/\lambda_i} \qquad d_i/d_{i0} < 1/3 \tag{3.12}$$

The relative error in the approximation of the heat flow is less than 4 %.

This result is also valid for the case with ground under the insulating layer, since the temperature varies periodically at both sides of the layer. We get a heat flow through the layer due to a periodic variation in the indoor temperature, and another one due to the periodic ground temperature. Both these processes are studied above. Thus formula (3.12) is valid for a layer with ground below.

For insulation materials, $a_i \approx 4.0 \cdot 10^{-7} - 40 \cdot 10^{-7}$ m^2/s, the length d_{i0} is 2–6 m for a time period of one year. The approximation (3.12) is then valid for a maximum insulation thicknesses lying in the interval 0.7–2.1 m. For shorter time periods the penetration depth d_{i0} becomes smaller. For a time period of one week d_{i0} lies in the interval 0.28 – 0.88 m and the approximation (3.12) is valid for d_i below 0.09–0.29 m.

3.2 BOUNDARY CONDITION AT THE BUILDING

The foundation of the building is normally thermally insulated. Let $T_{in}(t)$ denote the temperature in the building above the insulation, and let d_i denote the insulation thickness and λ_i the thermal conductivity. The steady-state approximation for the heat flow through the layer is discussed in Section 3.1. The boundary condition at the thermal insulation becomes in this approximation:

$$\frac{T_{in}(t) - T}{d_i/\lambda_i} = -\lambda\frac{\partial T}{\partial n} \tag{3.13}$$

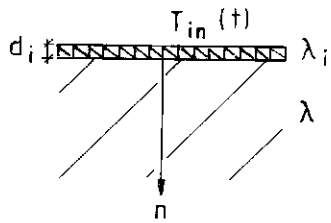

The thermal conductivity of the ground is λ. The derivative of the ground temperature along the inward-drawn normal is denoted by $\partial T/\partial n$.

The thermal resistance of the insulation is d_i/λ_i (m^{2}K/W). This resistance is used in the boundary condition. If the thermal insulation consists of different layers, or the thermal resistance of the concrete slab is taken into account, the total thermal resistance R_{tot} (m^{2}K/W) between the interior of the building and the ground should be used. The boundary condition (3.13) becomes:

$$\frac{T_{in}(t) - T}{R_{tot}} = -\lambda\frac{\partial T}{\partial n} \tag{3.14}$$

Our *general boundary condition at the foundation* against the ground is:

$$T_{in}(t) = T - d\frac{\partial T}{\partial n} \tag{3.15}$$

The length d, which is called the *equivalent insulation thickness*, is given by:

$$d = \frac{\lambda d_i}{\lambda_i} \quad \text{or} \quad d = \lambda \cdot R_{tot} \tag{3.16}$$

The length d is a measure of the thermal insulation. A layer of soil with the thickness d has the same thermal resistance as the insulation layer of thickness d_i, since $d/\lambda = d_i/\lambda_i$. The equivalent insulation thickness d may be different for different parts of the foundation surface. For instance, for a cellar we will use the equivalent insulation thickness d for the floor surface, and d_w for the surface of the cellar wall.

To determine the size of the thermal insulation and boundary condition, it is sufficient to give d. It is not necessary to give the parameters d_i and λ_i separately.

The equivalent insulation thickness d gives a physical measure of the thermal insulation in relation to the dimension of the building. This is illustrated in Example 3.1.

Example 3.1:

Consider the following thermal conductivities:

$\lambda = 1.5$ W/mK $\qquad \lambda_i = 0.04$ W/mK

With (3.16) we obtain the following equivalent insulation thicknesses:

I	$d_i = 0.08$ m:	$d = 3$ m
II	$d_i = 0.50$ m:	$d = 19$ m

For a house of the width B the thickness of the insulating soil is of the magnitude $B/2$. Consider a house of the width 8 m. For case I the insulation thickness d is of the same magnitude as the layer of soil under the house (3 m versus 8/2=4 m). For case II the insulation thickness predominates over the layer of soil (19 m versus 4 m).

3.3 BOUNDARY CONDITION AT THE GROUND SURFACE

The temperature of the outdoor air is denoted by $T_{out}(t)$. At the ground surface outside the building we have the heat transfer coefficient α between the air and the ground surface. The value of α depends for example on wind conditions. The boundary condition at the ground surface becomes:

$$\alpha(T_{out}(t) - T) = -\lambda \frac{\partial T}{\partial n} \tag{3.17}$$

Our *general boundary condition at the ground surface* is:

$$T_{out}(t) = T - d_1 \frac{\partial T}{\partial n} \tag{3.18}$$

On the right-hand side we have the derivative of the ground temperature along the inward-drawn normal. The *equivalent insulation thickness* d_1 gives a measure of the thermal resistance at the ground surface:

$$d_1 = \frac{\lambda}{\alpha} \tag{3.19}$$

The value of α lies in the range 5 to 50 W/m^{2}K. We have for example:

$$\lambda = 1.5 \text{ W/mK} \qquad \begin{array}{ll} \alpha = 5 \text{ W/m}^2\text{K}: & d_1 = 0.3 \text{ m} \\ \alpha = 50 \text{ W/m}^2\text{K}: & d_1 = 0.03 \text{ m} \end{array} \tag{3.20}$$

The thermal resistance between the air and the ground surface corresponds to a layer of soil with a thickness of a few centimeters to a few decimeters. This small thermal resistance can normally be neglected in calculations of the heat loss from the building. If the thermal resistance at the ground surface is neglected ($1/\alpha$=0,$\alpha = \infty$), the boundary temperature becomes equal to $T_{out}(t)$:

$$T = T_{out}(t) \qquad (\alpha = \infty \text{ or } d_1 = 0) \tag{3.21}$$

The thermal resistance of a snow layer cannot be neglected. Let d_{snow} denote the thickness of the snow layer and λ_{snow} its thermal conductivity. The equivalent insulation thickness of the snow layer is:

$$d_1 = \frac{\lambda d_{snow}}{\lambda_{snow}} \tag{3.22}$$

We have for example:

$$\lambda = 1.5 \text{ W/mK} \quad \lambda_{snow} = 0.15 \text{ W/mK} \quad \begin{array}{ll} d_{snow} = 0.10 \text{ m}: & d_1 = 1 \text{ m} \\ d_{snow} = 0.50 \text{ m}: & d_1 = 5 \text{ m} \end{array} \tag{3.23}$$

The heat loss from the building for the case with snow on the ground is studied in Section 13.3.

3.4 INITIAL CONDITION

There are no initial conditions for steady-state and periodic temperature problems. For transient processes, the ground temperature at the start time $t = 0$ must be given. The start time depends on when the house is built. The temperature of the top layer of the soil varies with the time of the year. At a depth, say 2 meter, the temperature is essentially constant and equal to the annual average ground surface temperature T_0. For our purpose it is sufficient to use this temperature as a initial ground temperature. We have:

$$T|_{t=0} = T_0 \tag{3.24}$$

Chapter 4

SUPERPOSITION AND FUNDAMENTAL SOLUTIONS

The use of superposition technique requires that the governing equations are linear. This linearity means that if two temperature fields are solutions, then the sum is also a solution to the partial differential equation and appropriate boundary and initial conditions.

It is required that the thermal properties of the ground (λ, C) are independent of temperature. The thermal heat transfer coefficients and thermal resistances $(\alpha, d, d_w, ..d_1)$ must also be independent of temperature.

The temperature dependence of the thermal properties of the ground can be neglected if there is no freezing. Thus superposition technique may be used if the ground temperature is always above 0°C, or the water content of the soil is negligible (dry soils). In this study the freezing of the ground is neglected. The influence on the heat loss due to the freezing is studied in Section 13.2.

4.1 PRINCIPLE OF SUPERPOSITION

Figure 4.1 illustrates the superposition principle. The constant temperature in the building above the thermal insulation is T_i. The time-dependent outdoor temperature is divided into two parts $T^a_{out}(t)$ and $T^b_{out}(t)$. The first process has the temperature T_i above the thermal insulation and $T^a_{out}(t)$ as outdoor temperature. The second one has the temperature zero above the thermal insulation and $T^b_{out}(t)$ as outdoor temperature. The temperature for the first process is denoted by $T^a(x, y, z, t)$ and the second by $T^b(x, y, z, t)$. The two processes satisfy the heat conduction equation (2.1):

$$\nabla \cdot (\lambda \nabla T^a) = C \frac{\partial T^a}{\partial t}$$

$$\nabla \cdot (\lambda \nabla T^b) = C \frac{\partial T^b}{\partial t} \tag{4.1}$$

Due to the linearity of the nabla operator (∇) and the time derivative $\partial/\partial t$ we get:

$$\nabla \cdot (\lambda \nabla T^a) + \nabla \cdot (\lambda \nabla T^b) = \nabla \cdot (\lambda \nabla T^a + \lambda \nabla T^b) =$$

$$= \nabla \cdot (\lambda \nabla (T^a + T^b)) = C \frac{\partial T^a}{\partial t} + C \frac{\partial T^b}{\partial t} = C \frac{\partial (T^a + T^b)}{\partial t} \tag{4.2}$$

Thus we have:

$$\nabla \cdot (\lambda \nabla (T^a + T^b)) = C \frac{\partial (T^a + T^b)}{\partial t} \tag{4.3}$$

The sum of the two temperature processes satisfies the heat conduction equation.

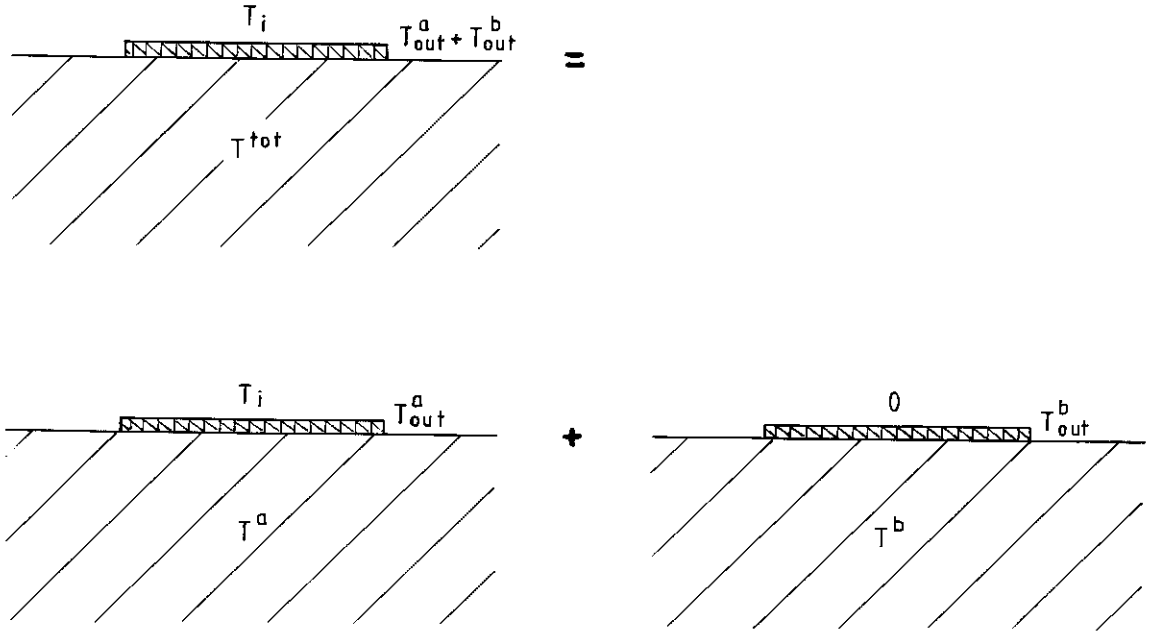

Figure 4.1: Superposition where the temperature at ground surface is divided into two parts. The indoor temperature T_i is attributed to the first part.

The boundary condition at the building is given by (3.15). The indoor temperature T_i is accounted for by the first solution T^a. For the process T^a we get:

$$T_i = T^a - d\frac{\partial T^a}{\partial n} \tag{4.4}$$

The indoor temperature for the second solution T^b must be zero:

$$0 = T^b - d\frac{\partial T^b}{\partial n} \tag{4.5}$$

By adding Equations 4.4 and 4.5 we get:

$$T_i + 0 = T^a + T^b - d\frac{\partial (T^a + T^b)}{\partial n} \tag{4.6}$$

At the ground surface we have:

$$T^a = T^a_{out}(t) \qquad T^b = T^b_{out}(t) \tag{4.7}$$

The sum gives our original boundary condition for the total process:

$$T^a + T^b = T^{tot} = T^a_{out}(t) + T^b_{out}(t) \tag{4.8}$$

Thus the total temperature distribution denoted by $T^{tot}(x, y, z, t)$ is obtained by the sum of T^a and T^b:

$$T^{tot}(x, y, z, t) = T^a(x, y, z, t) + T^b(x, y, z, t) \tag{4.9}$$

The superposition technique can be used when the thermal properties are a function of position or time. For instance, the equivalent insulation thickness d may vary along the

foundation or in time. The superposition technique is not valid when λ, C or d depends on T.

For transient thermal processes the initial ground temperature, i.e. the temperature at $t = 0$, must be accounted for. When superposition is used the sum of the initial ground temperatures for the components must be equal to the initial ground temperature for the total thermal process. In the example above, the initial temperature may be attributed to the component T^a. The other component T^b then starts with zero ground temperature. In general, we must have:

$$T^{tot}\Big|_{t=0} = T^a|_{t=0} + T^b\Big|_{t=0} \tag{4.10}$$

The heat loss to the ground for the total temperature process $Q^{tot}(t)$ is obtained by adding the heat losses Q^a and Q^b for the components:

$$Q^{tot}(t) = Q^a(t) + Q^b(t) \tag{4.11}$$

4.2 FUNDAMENTAL THERMAL PROCESSES

Six important fundamental temperature processes are presented in this section. They will be used in the superposition later in this chapter and through out this study in order to represent the total temperature process in the ground.

Figure 4.2 shows the conditions for the *steady-state* temperature process $T_s(x, y, z)$. The temperature T_i above the thermal insulation of the building is constant. This is the indoor temperature. Outside the house we have the constant outdoor temperature T_0. This is an average outdoor temperature. The steady-state heat loss is denoted by Q_s.

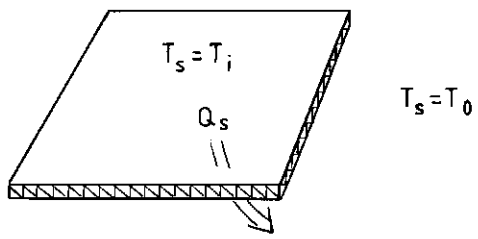

Figure 4.2: Steady-state temperature process.

Figure 4.3 shows the conditions for the *outdoor periodic* temperature process $T_p(x, y, z, t)$. The indoor temperature is zero. The outdoor temperature has a sinusoidal variation $T_1 \cdot \sin(2\pi t/t_0)$. Here T_1 is the amplitude and t_0 is the time period. The transient temperature process needed for the periodic temperature build-up in the ground is not considered. Thus the temperature in the whole ground is assumed to vary periodically. The periodic heat loss, which is sinusoidal, is denoted by Q_p.

Figure 4.4 shows the conditions for the *indoor periodic* temperature process $T_{pi}(x, y, z, t)$. The indoor temperature is $T_3 \cdot \sin(2\pi t/t_3)$. Here T_3 is the amplitude and t_3 is the time period. The outdoor temperature is zero. The periodic heat loss for indoor temperature variation is denoted by Q_{pi}. It is also sinusoidal.

Figure 4.5 shows the conditions for the *outdoor step-change* temperature process. The temperature is denoted by $T_t(x, y, z, t)$. The indoor temperature is zero. The outdoor temperature is changed from zero to T_2 at the time zero. The ground temperature at $t = 0$ is

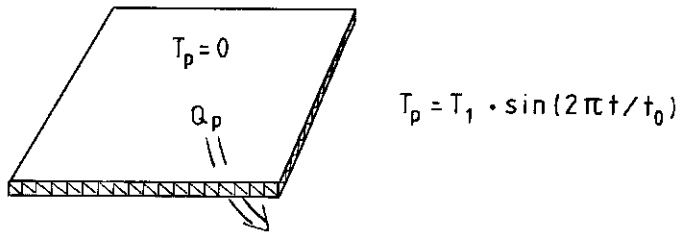

Figure 4.3: Outdoor periodic temperature process.

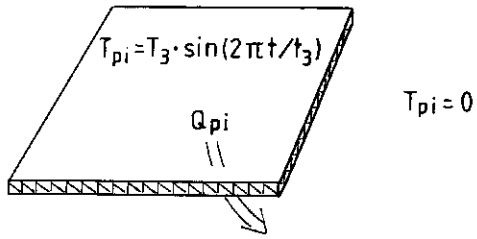

Figure 4.4: Indoor periodic temperature process.

zero. The heat loss due to the outdoor temperature step is denoted by Q_t, (Q_t is negative for positive T_2).

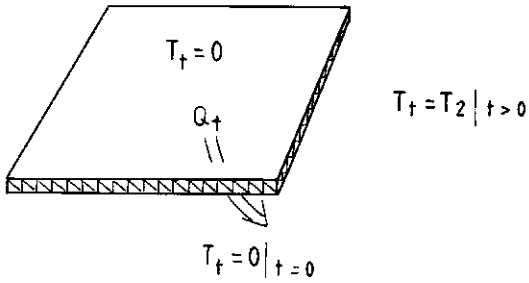

Figure 4.5: Outdoor step-change temperature process.

Figure 4.6 shows the conditions for the ***indoor step-change*** temperature process. The temperature is denoted by $T_{ti}(x, y, z, t)$. The outdoor temperature is zero. The indoor temperature is changed from zero to T_4 at the time zero. The ground temperature at $t = 0$ is zero. The heat loss due to the temperature step of the indoor temperature is denoted by Q_{ti}.

A particular case of the indoor step-change temperature process is the thermal build-up of the steady-state temperature in the ground under the building. We will use special notations for this important case. Figure 4.7 shows the conditions for the ***thermal build-up*** temperature process $T_{tb}(x, y, z, t)$. The indoor temperature rises from T_0 to T_i at the time zero. Thus we have a temperature step $T_i - T_0$ at time zero. The outdoor temperature is T_0. The ground temperature at $t = 0$ is also T_0. The heat loss due to the thermal build-up is denoted by Q_{tb}.

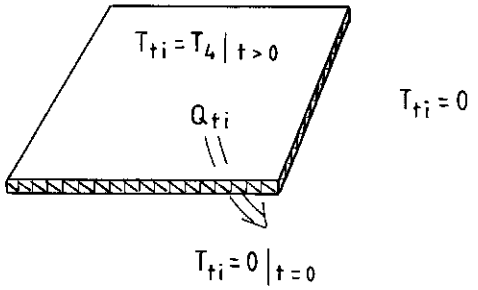

Figure 4.6: Indoor step-change temperature process.

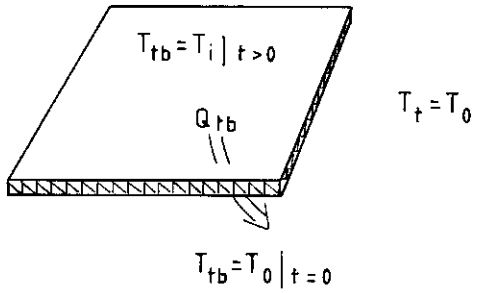

Figure 4.7: Thermal build-up temperature process.

4.3 THE TEMPERATURE EXPRESSED BY FUNDAMENTAL SOLUTIONS

4.3.1 STEADY-STATE AND PERIODIC SOLUTIONS

The outdoor temperature varies during the year. A reasonable approximation is to assume that the temperature is the same from year to year. We then have a periodic outdoor temperature with the time period t_0 of one year. The temperature may be written as a Fourier series:

$$T_{out}(t) = T_0 + \sum_{n=1}^{\infty} T_n \cdot \sin(2\pi n t/t_0 + f_n) \tag{4.12}$$

Here T_0 is the annual mean value of the outdoor temperature. The temperature T_n is the amplitude of the n:th component. This component has the time period t_0/n and the phase f_n.

This representation of the outdoor temperature variation has a steady-state component and an infinite number of periodic components. The steady-state process has, in accordance with Figure 4.2, the indoor temperature T_i and the outdoor temperature T_0. For the n:th sinusoidal component the indoor temperature is zero and the outdoor temperature is $T_n \cdot \sin(2\pi n t/t_0 + f_n)$. This is an outdoor periodic temperature processes of the type shown in Figure 4.3. The time period is replaced by t_0/n, and we also have a phase shift f_n.

The heat loss due to the steady-state part is denoted by Q_s, and the heat loss due to the n:th periodic component is denoted by $Q_{p,n}(t)$. The total heat loss becomes:

$$Q(t) = Q_s + \sum_{n=1}^{\infty} Q_{p,n}(t) \tag{4.13}$$

It is often sufficient to use the first periodic component only:

$$T_{out}(t) = T_0 + T_1 \cdot \sin(2\pi t/t_0) \tag{4.14}$$

Here we have put f_1 equal to zero for simplicity. The corresponding heat loss becomes:

$$Q(t) = Q_s + Q_p(t) \tag{4.15}$$

4.3.2 STEADY-STATE AND STEP-CHANGE SOLUTIONS

The outdoor temperature may be represented by piece-wise constant temperatures, see Figure 4.8.

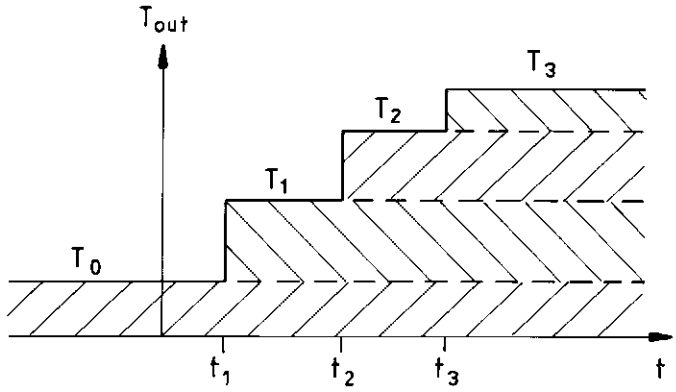

Figure 4.8: Example of piece-wise constant outdoor temperature.

This temperature is for the case with up to n steps ($t < t_{n+1}$):

$$T_{out}(t) = T_0 + \sum_{j=1}^{n} (T_j - T_{j-1}) \cdot H(t - t_j) \qquad t < t_{n+1} \tag{4.16}$$

Here $H(t)$ is the Heaviside's unit step function:

$$H(t) = \begin{cases} 1 & t > 0 \\ 0 & t < 0 \end{cases} \tag{4.17}$$

The total temperature process is given by a steady-state part and n outdoor step-changes. The steady-state part has, in accordance with Figure 4.2, the indoor temperature T_i and the outdoor temperature T_0. We have the steady-state temperature T_s in the ground for $t < t_1$. The indoor temperature is, in accordance with Figure 4.5, zero for the outdoor step-change temperature processes. The j:th step-change occurs at the time t_j. The outdoor temperature step-change is $T_j - T_{j-1}$. The temperature T_2 is replaced by $T_j - T_{j-1}$ in Figure 4.5. The initial ground temperature for the step-changes is zero.

The heat loss to the ground becomes:

$$Q(t) = Q_s + \sum_{j=1}^{n} Q_{t,j}(t) = Q_s + \sum_{j=1}^{n} (T_j - T_{j-1}) \cdot Q_t(t - t_j) \tag{4.18}$$

Here $Q_{t,j}(t)$ is the heat loss due to an outdoor temperature step $T_j - T_{j-1}$ at the time t_j. The heat loss is proportional to the size of the temperature step. The heat loss $Q_t(t)$ due to a unit outdoor temperature step at $t = 0$ is shown in Figure 4.5 with $T_2 = 1$.

Any outdoor temperature $T_{out}(t)$ may be represented by step-wise constant values in the limit of infinitely small steps. Let the outdoor temperature be given by:

$$T_{out}(t) = T_0 + T_2(t) \qquad t \geq 0 \tag{4.19}$$

Here $T_2(t)$ is an arbitrary function, which is equal to zero for times less than or equal to zero. An integral formulation of the outdoor temperature is:

$$T_{out}(t) = T_0 + \int_0^t \frac{dT_2(\tau)}{d\tau}\, d\tau \tag{4.20}$$

The temperature $T_2(t)$ is obtained by a integral of infinitely small temperature steps $dT_2(\tau)/d\tau \cdot d\tau$, which occur at the time τ. The heat loss is obtained by integrating the heat loss contributions from all these steps:

$$Q(t) = Q_s + \int_0^t Q_t(t-\tau)\frac{dT_2(\tau)}{d\tau}\, d\tau \tag{4.21}$$

Here $Q_t(t)$ is the heat loss due to a unit outdoor temperature step at $t = 0$. It is shown in Figure 4.5 with $T_2 = 1$. The structure of the formula is analogous to (4.18). Formula (4.21) is a particular case of the well-known Duhamel's theorem, [13].

4.3.3 TEMPERATURE REPRESENTED BY THREE FUNDAMENTAL SOLUTIONS

In Sections 4.3.1-2 two different representations of the outdoor temperature have been given. The two types of representation may of course be mixed. We will find that it is often sufficient to use the following representation of the outdoor temperature:

$$T_{out}(t) = T_0 + T_1 \cdot \sin(2\pi t/t_0) + T_2 \cdot (H(t-t_1) - H(t-t_1-t_2)) \tag{4.22}$$

Figure 4.9 shows this type of outdoor temperature. We have a mean temperature level T_0 and a superimposed sinusoidal temperature, which gives the summer and winter temperatures. At the time t_1 a cold spell starts. It continues during the time t_2.

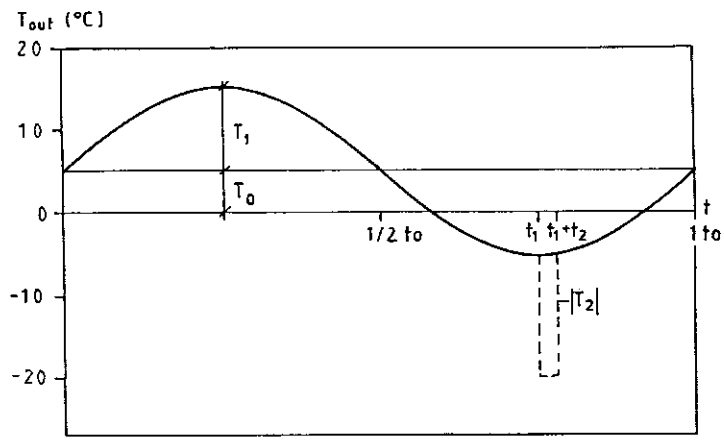

Figure 4.9: Outdoor temperature according to (4.22).

This representation of the outdoor temperature variation has a steady-state component, a periodic component, and two outdoor step-change components. The steady-state process has,

in accordance with Figure 4.2, the indoor temperature T_i and the outdoor temperature T_0. For the periodic component the indoor temperature is zero, and the outdoor temperature is $T_1 \cdot \sin(2\pi t/t_0)$, in accordance with Figure 4.3. The first outdoor step-change, T_2, occurs at $t = t_1$, and the second step-change, $-T_2$, occurs at $t = t_1 + t_2$. The indoor temperature is, in accordance with Figure 4.5, zero for the step-change processes. The heat loss becomes:

$$Q(t) = Q_s + Q_p(t) + T_2 \cdot (Q_t(t - t_1) - Q_t(t - t_1 - t_2)) \tag{4.23}$$

Here $Q_t(t)$ is the heat loss due to a unit outdoor temperature step at $t = 0$. It is shown in Figure 4.5 with $T_2 = 1$.

4.4 EQUATIONS FOR THE STEADY-STATE SOLUTION

Figure 4.2 illustrates the conditions for the steady-state temperature process $T_s(x, y, z)$. The heat conduction equation for a homogeneous ground is given by (2.2):

$$\frac{\partial^2 T_s}{\partial x^2} + \frac{\partial^2 T_s}{\partial y^2} + \frac{\partial^2 T_s}{\partial z^2} = \nabla^2 T_s = 0 \tag{4.24}$$

The boundary conditions are given by (3.15) and (3.18):

$$\begin{cases} T_i = T_s - d\dfrac{\partial T_s}{\partial n} & \text{at the building} \\ \\ T_0 = T_s - d_1\dfrac{\partial T_s}{\partial n} & \text{at ground surface} \end{cases} \tag{4.25}$$

Here $\partial T/\partial n$ denotes the temperature derivative along the inward-drawn normal.

4.5 EQUATIONS FOR THE PERIODIC SOLUTIONS

4.5.1 COMPLEX NOTATION

For the periodic temperature solutions it is convenient to use complex notation. This is a standard technique in the theory of alternating currents, where voltage and current are represented in a complex-valued form. The complex-valued periodic temperature has the form:

$$\hat{T}(x, y, z) \cdot e^{2\pi i t/t_0} \tag{4.26}$$

The exponential time factor contains both cosine and sine variation:

$$e^{2\pi i t/t_0} = \cos(2\pi t/t_0) + i \cdot \sin(2\pi t/t_0) \tag{4.27}$$

The complex-valued factor $\hat{T}(x, y, x)$ gives the spatial variation of the temperature. The notation $\hat{}$ means that the quantity is complex-valued.

Real-valued solutions T_p are obtained by taking the real or the imaginary part of the complex-valued temperature (4.26):

$$T_p(x, y, z, t) = \Re/\Im\left\{\hat{T}(x, y, z) \cdot e^{2\pi i t/t_0}\right\} \tag{4.28}$$

We will use the notation $\Re/\Im$ to indicate the real or imaginary part.

We will need some rules and properties for the complex-valued exponential function. We have:

$$e^{x+iy} = e^x \cdot e^{iy} = e^x \cos(y) + i \cdot e^x \sin(y) \tag{4.29}$$

$$e^{iy} = \cos(y) + i \cdot \sin(y) \qquad |e^{iy}| = 1 \tag{4.30}$$

$$e^{x_1+iy_1} \cdot e^{x_2+iy_2} = e^{x_1+x_2+i(y_1+y_2)} \tag{4.31}$$

The absolute value of the complex-valued number e^{x+iy} is e^x, since e^{iy} has the absolute value 1. The argument is given by y. See Figure 4.10.

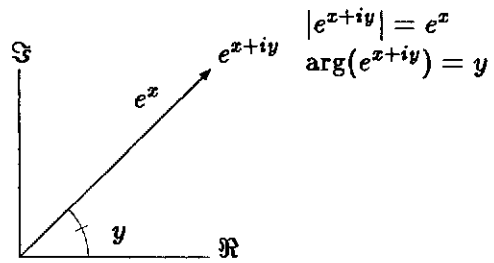

Figure 4.10: Absolute value and argument for the complex-valued exponential function.

The periodic problem with an outdoor periodic temperature is defined in Figure 4.3. The outdoor temperature is sinusoidal. As an alternative, the outdoor temperature may be cosinusoidal or a combination of the two. In the complex-valued representation the outdoor temperature is given by $T_1 \cdot \exp(2\pi i t/t_0)$, which contains both the sine and the cosine variation. See Figure 4.11 The complex-valued temperature $\hat{T}(x, y, z)$ has the outdoor temperature T_1

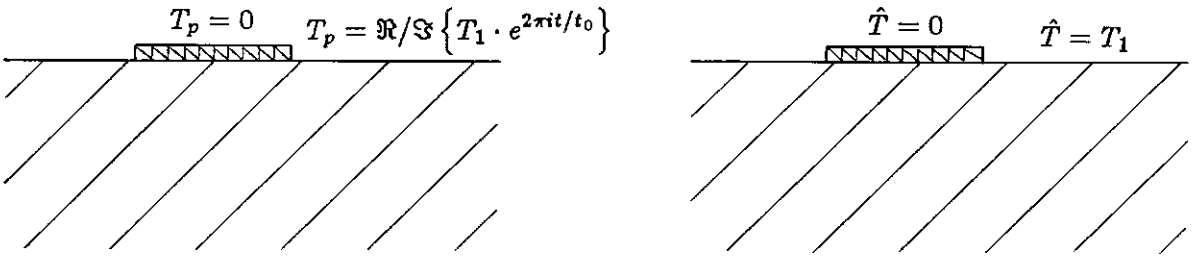

Figure 4.11: Periodic temperature process in complex form with a complex-valued outdoor temperature.

and zero indoor temperature, Figure 4.11 right. The outdoor temperature for the real-valued temperature solution T_p becomes:

$$T_p = \Re/\Im\left\{T_1 \cdot e^{2\pi i t/t_0}\right\} \tag{4.32}$$

For the real part the outdoor temperature becomes:

$$T_p = T_1 \cdot \cos(2\pi t/t_0) \tag{4.33}$$

For the imaginary part the outdoor temperature becomes:

$$T_p = T_1 \cdot \sin(2\pi t/t_0) \tag{4.34}$$

This means that the imaginary part of the complex-valued temperature gives the solution of the problem in Figure 4.3 with a sinusoidal variation of the outdoor temperature, and the real part gives the solution for a cosinusoidal outdoor temperature.

Using the absolute value and the argument of $\hat{T}(x,y,z)$ the periodic temperature (4.28) can be written:

$$T_p(x,y,z,t) = \Re/\Im\left\{|\hat{T}(x,y,z)| \cdot e^{i\arg(\hat{T}(x,y,z))} \cdot e^{2\pi i t/t_0}\right\} =$$

$$= |\hat{T}(x,y,z)| \cdot \Re/\Im\left\{e^{i(2\pi t/t_0 + \arg(\hat{T}(x,y,z))}\right\} \tag{4.35}$$

The real-valued temperature solution T_p for a cosinusoidal outdoor temperature (4.33) becomes:

$$T_p(x,y,z,t) = |\hat{T}(x,y,z)| \cdot \cos(2\pi t/t_0 + \arg(\hat{T}(x,y,z))) \tag{4.36}$$

The real-valued temperature solution T_p for a sinusoidal outdoor temperature (4.34) becomes:

$$T_p(x,y,z,t) = |\hat{T}(x,y,z)| \cdot \sin(2\pi t/t_0 + \arg(\hat{T}(x,y,z))) \tag{4.37}$$

It is convenient to introduce the phase ϕ_p:

$$\phi_p = -\frac{1}{2\pi}\arg(\hat{T}) \tag{4.38}$$

The temperature (4.37) may then be written as:

$$T_p = |\hat{T}| \cdot \sin(2\pi(t/t_0 - \phi_p)) \tag{4.39}$$

The phase ϕ_p gives the time delay as a fraction of the time period. Thus the time delay is $\phi_p \cdot t_0$.

4.5.2 EQUATIONS

The complex-valued temperature (4.26) is inserted in the heat conduction equation (2.2):

$$\nabla^2\hat{T} \cdot e^{2\pi i t/t_0} = \frac{1}{a}\hat{T} \cdot \frac{d}{dt}\left(e^{2\pi i t/t_0}\right) \tag{4.40}$$

The equation can be divided into one real part and one imaginary part. Both these parts are satisfied if the complex-valued equation (4.40) is satisfied.

We will need the time derivative of the exponential function:

$$\frac{d}{dt}\left(e^{2\pi i t/t_0}\right) = \frac{2\pi i}{t_0}e^{2\pi i t/t_0} \tag{4.41}$$

This can be shown in the following way:

$$\frac{d}{dt}\left(e^{2\pi i t/t_0}\right) = \frac{d}{dt}\left(\cos(2\pi t/t_0) + i\sin(2\pi t/t_0)\right) =$$

$$-\frac{2\pi}{t_0}\sin(2\pi t/t_0) + i\frac{2\pi}{t_0}\cos(2\pi t/t_0)$$

$$\frac{2\pi i}{t_0}\left(\cos(2\pi t/t_0) + i\,\sin(2\pi t/t_0)\right) = \frac{2\pi i}{t_0}e^{2\pi i t/t_0} \tag{4.42}$$

The time derivative of the exponential time factor (4.41) is inserted in (4.40):

$$\nabla^2\hat{T} \cdot e^{2\pi i t/t_0} = \frac{2\pi i}{a t_0}\hat{T}e^{2\pi i t/t_0} \tag{4.43}$$

Here the exponential time factor cancels. This gives a great simplification of the problem. This is the reason why the complex-valued formulation is used. The equation for the complex-valued periodic temperature is:

$$\frac{\partial^2 \hat{T}}{\partial x^2} + \frac{\partial^2 \hat{T}}{\partial y^2} + \frac{\partial^2 \hat{T}}{\partial z^2} = \nabla^2 \hat{T} = \left(\frac{1+i}{d_0}\right)^2 \hat{T} \tag{4.44}$$

Here we have introduced the length d_0:

$$d_0 = \sqrt{\frac{at_0}{\pi}} \tag{4.45}$$

The parameter d_0 will be called the *periodic penetration depth.* It will be discussed more in detail in Section 6.1.1. The outdoor and indoor boundary temperatures for the complex-valued temperature $\hat{T}$ are shown in Figure 4.11. The boundary conditions are obtained from (3.15) and (3.18), where the indoor temperature T_{in} is zero and the outdoor temperature T_{out} is T_1:

$$\begin{cases} 0 = \hat{T} - d\dfrac{\partial \hat{T}}{\partial n} & \text{at the building} \\ \\ T_1 = \hat{T} - d_1\dfrac{\partial \hat{T}}{\partial n} & \text{at ground surface} \end{cases} \tag{4.46}$$

In accordance with Figure 4.4 and (4.28) the indoor periodic temperature has the form:

$$T_{pi}(x,y,z,t) = \Re/\Im\{\hat{T}_{pi}(x,y,z) \cdot e^{2\pi i t/t_3}\} \tag{4.47}$$

The complex-valued periodic temperature $\hat{T}_{pi}(x,y,z)$ satisfies an equation of the type (4.44):

$$\frac{\partial^2 \hat{T}_{pi}}{\partial x^2} + \frac{\partial^2 \hat{T}_{pi}}{\partial y^2} + \frac{\partial^2 \hat{T}_{pi}}{\partial z^2} = \nabla^2 \hat{T}_{pi} = \left(\frac{1+i}{d_3}\right)^2 \hat{T}_{pi} \tag{4.48}$$

Here we have introduced the length d_3. It is the periodic penetration depth for indoor periodic temperature processes:

$$d_3 = \sqrt{\frac{at_3}{\pi}} \tag{4.49}$$

The boundary conditions become:

$$\begin{cases} T_3 = \hat{T}_{pi} - d\dfrac{\partial \hat{T}_{pi}}{\partial n} & \text{at the building} \\ \\ 0 = \hat{T}_{pi} - d_1\dfrac{\partial \hat{T}_{pi}}{\partial n} & \text{at ground surface} \end{cases} \tag{4.50}$$

4.6 EQUATIONS FOR THE STEP-CHANGE SOLUTIONS

The outdoor step-change temperature process is shown in Figure 4.5. The time-dependent temperature $T_t(x,y,z,t)$ satisfies the heat conduction equation:

$$\frac{\partial^2 T_t}{\partial x^2} + \frac{\partial^2 T_t}{\partial y^2} + \frac{\partial^2 T_t}{\partial z^2} = \nabla^2 T_t = \frac{1}{a}\frac{\partial T_t}{\partial t} \tag{4.51}$$

The boundary conditions are given by (3.15) and (3.18), where the indoor temperature is zero and the outdoor temperature is T_2 for times larger than zero:

$$\begin{cases} 0 = T_t - d\frac{\partial T_t}{\partial n} & t > 0 \quad \text{at the building} \\ T_2 = T_t - d_1\frac{\partial T_t}{\partial n} & t > 0 \quad \text{at ground surface} \end{cases} \tag{4.52}$$

The initial condition is:

$$T_t|_{t=0} = 0 \tag{4.53}$$

The temperature in the ground due to a temperature step of the indoor temperature is denoted by T_{ti}. It is shown in Figure 4.6. The temperature $T_{ti}(x, y, z, t)$ satisfies (4.51). The boundary conditions become:

$$\begin{cases} T_4 = T_{ti} - d\frac{\partial T_{ti}}{\partial n} & t > 0 \quad \text{at the building} \\ 0 = T_{ti} - d_1\frac{\partial T_{ti}}{\partial n} & t > 0 \quad \text{at ground surface} \end{cases} \tag{4.54}$$

The initial condition for T_{ti} becomes:

$$T_{ti}|_{t=0} = 0 \tag{4.55}$$

The thermal build-up process is shown in Figure 4.7. This is a special case of an indoor temperature step. The temperature $T_{tb}(x, y, z, t)$ satisfies (4.51). The boundary conditions are given by (3.15) and (3.18), where the indoor temperature is T_i and the outdoor temperature is T_0 for times larger than zero:

$$\begin{cases} T_i = T_{tb} - d\frac{\partial T_{tb}}{\partial n} & t > 0 \quad \text{at the building} \\ T_0 = T_{tb} - d_1\frac{\partial T_{tb}}{\partial n} & t > 0 \quad \text{at ground surface} \end{cases} \tag{4.56}$$

The initial condition becomes:

$$T_{tb}|_{t=0} = T_0 \tag{4.57}$$

Chapter 5

DIMENSIONLESS FORMULATION

Dimensional analysis and scaling are used in order to obtain a condensed formulation of our problems and, in particular, of the heat loss formulæ. With this technique the number of parameters in the problems is minimized. The general theory of dimensional analysis is discussed in [12].

5.1 STEADY-STATE PROCESS

In Section 5.1.1 the scaling for the steady-state case is performed in detail for the slab on the ground. Formulæ are given for the general case in Section 5.1.2.

5.1.1 DETAILED SCALING FOR THE SLAB

The width of the slab is B and the length is L. The equivalent insulation thickness d is constant over the slab ($-B/2 \leq x \leq B/2$, $-L/2 \leq y \leq L/2$, $z = 0$, see Figure 5.1). The thermal resistance at the ground surface is neglected ($d_1 = 0$). The thermal conductivity of the ground ($-\infty < x < \infty$, $-\infty < y < \infty$, $0 < z < \infty$) is λ. The heat conduction equation for the steady-state case is given by (4.24), and the boundary conditions are given by (4.25).

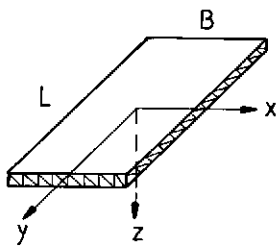

Figure 5.1: Rectangular slab on the ground.

We introduce non-dimensional length coordinates:

$$x' = x/B \qquad y' = y/B \qquad z' = z/B \tag{5.1}$$

We also introduce a non-dimensional temperature U:

$$T_s(x, y, z) = T_0 + (T_i - T_0) \cdot U(x', y', z') \tag{5.2}$$

The non-dimensional temperature $U(x', y', z')$ satisfies (4.24):

$$\frac{\partial^2 U}{\partial (x')^2} + \frac{\partial^2 U}{\partial (y')^2} + \frac{\partial^2 U}{\partial (z')^2} = 0 \qquad z' > 0 \tag{5.3}$$

The boundary condition for U is given by (5.2) and (4.25):

$$\begin{cases} 1 = U - \frac{d}{B}\frac{\partial U}{\partial z'} & z' = 0,\ |x'| < 0.5,\ |y'| < L/(2B) \\ 0 = U & z' = 0 \text{ outside the slab} \end{cases} \tag{5.4}$$

The solution U of (5.3-4) becomes a function of x', y', z', and the parameters L/B and d/B.

The steady-state heat loss Q_s is given by the integral (2.5):

$$Q_s = \int_{-L/2}^{L/2} dy \int_{-B/2}^{B/2} dx(-\lambda)\frac{\partial T_s}{\partial z}(x, y, 0) \tag{5.5}$$

We substitute for the coordinates and the temperatures the dimensionless ones given in (5.1-2):

$$Q_s = \int_{-L/(2B)}^{L/(2B)} B\, dy' \int_{-1/2}^{1/2} B\, dx'(-\lambda)(T_i - T_0)\frac{1}{B}\frac{\partial U}{\partial z'}(x', y', 0) \tag{5.6}$$

This can be written in the following way:

$$Q_s = \lambda(T_i - T_0)L \cdot h_s \tag{5.7}$$

The non-dimensional factor h_s is given by:

$$h_s = \frac{B}{L}\int_{-L/(2B)}^{L/(2B)} dy' \int_{-1/2}^{1/2} dx'(-)\frac{\partial U}{\partial z'}(x', y', 0) \tag{5.8}$$

The function U depends on L/B and d/B. Thus h_s will be a function of these parameters:

$$h_s = h_s(L/B, d/B) \tag{5.9}$$

5.1.2 GENERAL SCALING

Let us now consider the scaling in the general case. The heat flow and the steady-state heat loss Q_s (W) is proportional to the temperature difference $T_i - T_0$ (K) and to the thermal conductivity λ (W/mK). The product $\lambda(T_i - T_0)$ has the dimension W/m. In order to get the right dimension for the heat loss a multiplicative length factor L_s (m) is introduced. We have the general *steady-state heat loss formula*:

$$Q_s = \lambda(T_i - T_0)L_s \cdot h_s \tag{5.10}$$

Here h_s is the *dimensionless steady-state heat loss factor*. It depends on the various parameters of the problem. For the rectangular and evenly insulated slab we have three parameters d, L and B. The lengths L, B and the equivalent insulation thickness d can be transformed into dimensionless form by scaling with one of the lengths or the thickness in the problem, for instance B. The heat loss factor is then a function of the dimensionless parameters. The number of parameters is reduced from three (L, B, d) to two $(L/B, d/B)$.

Let, in the general case, $L_s, L_1, L_2, \ldots$ be the lengths and $d, d_1, d_2, ..$ the equivalent insulation thicknesses of the temperature problem. The ground may consist of regions with different thermal conductivities $\lambda, \lambda_1, \ldots$. The lengths and the equivalent insulation thicknesses are scaled by L_s, and the thermal conductivities are scaled by λ. The conductivity ratios $\lambda_1/\lambda, ..$ occur in the condition of continuity of the heat flow at internal boundaries between different ground regions. We get the following general expression for the heat loss factor:

$$h_s = h_s(L_1/L_s, L_2/L_s, \ldots, d/L_s, \ldots, \lambda_1/\lambda, \ldots) \tag{5.11}$$

It is sometimes practical to use different scaling lengths. Consider the following example:

$$Q_s = \lambda(T_i - T_0)L_1 \cdot h_s(L_2/L_1, L_3/L_1, d/L_1, d_1/L_1) \tag{5.12}$$

If we want d_1/d as dimensionless parameter and L_2 as multiplicative scale factor, then we rearrange the formula in the following way:

$$\begin{aligned} Q_s &= \lambda(T_i - T_0)L_2 \cdot (L_1/L_2)h_s(L_2/L_1, L_3/L_1, d/L_1, (d_1/d) \cdot (d/L_1)) \\ &= \lambda(T_i - T_0)L_2 \cdot h_s'(L_2/L_1, L_3/L_1, d/L_1, d_1/d) \end{aligned} \tag{5.13}$$

The new heat loss factor depends on the set of parameters wanted.

For the two-dimensional case the heat loss is denoted by q_s (W/m). The multiplicative length factor L_s vanishes in the heat loss formula (5.10):

$$q_s = \lambda(T_i - T_0) \cdot h_s \tag{5.14}$$

The dependence of the parameters for the heat loss factor is of the same type as for the three-dimensional case discussed above.

The two-dimensional heat loss problem is a special case of the three-dimensional one. It concerns the limit with infinitely long buildings. It will be used as an approximation for longish buildings. Consider as an example a longish slab with the length L. Combining (5.7) and (5.9) we get a formula for the heat loss per meter of the slab. For a longish slab, $L \gg B$, we get the following approximation:

$$\frac{Q_s}{L} = \lambda(T_i - T_0) \cdot h_s(L/B, d/B) \approx \lambda(T_i - T_0) \cdot h_s(\infty, d/B) \quad \text{(W/m)} \tag{5.15}$$

The heat loss q_s (W/m) per meter, in the length direction of the slab, becomes:

$$q_s = \lambda(T_i - T_0) \cdot h_s(d/B) \tag{5.16}$$

The heat loss q_s does not depend on the size of the system, since the length factor has vanished. For the three-dimensional case the heat loss Q_s varies linearly with the size of the system.

5.2 PERIODIC PROCESS

The heat conduction equation for the complex-valued periodic temperature $\hat{T}$ is given by (4.44) and the boundary conditions by (4.46). The heat conduction equation for $\hat{T}$ differs from the one for the steady-state temperature T_s by the right-hand term $((1+i)/d_0)^2\hat{T}$. An extra length d_0 arises. The scaling for the periodic temperature process is very similar to the scaling of the steady-state one. The parameters of the problems are the same except for this additional length d_0. The formula for the complex-valued outdoor periodic heat loss has the same structure as the steady-state formula (5.10). In accordance with Figure 4.2-3 the temperature difference $T_i - T_0$ is replaced by $(0 - T_1) \cdot \exp(2\pi i t/t_0)$. The real-valued *outdoor periodic heat loss formula* for Q_p (W) is in accordance with (4.28):

$$Q_p(t) = \Re/\Im\left\{-\lambda T_1 L_s \cdot h_p \cdot e^{2\pi i t/t_0}\right\} \tag{5.17}$$

Here h_p is a dimensionless complex-valued *periodic heat loss factor*.

For a sinusoidal outdoor temperature (4.34) the outdoor periodic heat loss becomes:

$$Q_p(t) = -\lambda T_1 L_s \cdot |h_p| \cdot \sin(2\pi(t/t_0 + \arg(h_p)/(2\pi))) \tag{5.18}$$

Here $|h_p|$ is the absolute value of h_p and $\arg(h_p)$ is the argument. The heat flows into the building for positive values of the outdoor temperature. This explains the minus sign.

The outdoor periodic heat loss factor h_p has, except for d_0, the same set of parameters as the steady-state one. For our evenly insulated rectangular slab we have:

$$h_p = h_p(L/B, d/B, d/d_0) \tag{5.19}$$

An extra parameter d/d_0 occurs.

For the general case, with regions of different thermal properties, we must account for the different thermal diffusivities $a, a_1, a_2, ..$. The periodic penetration lengths $\sqrt{a_1 t_0/\pi}$, $\sqrt{a_2 t_0/\pi}$... occur. They are scaled with the outdoor periodic penetration depth $\sqrt{a t_0/\pi}$. We get the additional parameters $a_1/a, a_2/a, ..$. We get the following parameter dependence for the heat loss factor:

$$h_p = h_p(L_1/L_s, L_2/L_s, ..., d/L_s, ..., d_0/L_s, \lambda_1/\lambda, ..., a_1/a, ...) \tag{5.20}$$

For the two-dimensional case the heat loss is denoted by q_p (W/m). The multiplicative length factor L_s vanishes in the heat loss formula (5.17):

$$q_p(t) = \Re/\Im\left\{-\lambda T_1 \cdot h_p \cdot e^{2\pi i t/t_0}\right\} \tag{5.21}$$

The dependence of the parameters for the heat loss factor is of the same type as for the three-dimensional case discussed above.

We have the same formulæ for the periodic indoor temperature solution. See Figure 4.4. The heat loss is denoted by Q_{pi} (W), and the heat loss factor is denoted by h_{pi}. The temperature $-T_1$ is replaced by T_3. The set of parameters is the same for the indoor and outdoor periodic temperature solutions.

5.3 STEP-CHANGE PROCESS

The heat conduction equation for the step-change temperature process is given by (4.51). The coordinates x, y and z are scaled with the length L_s. Compare with (5.1). Since $a \cdot t$ has the dimension m^2, it can be scaled with L_s^2. We get the following non-dimensional time and coordinates:

$$x' = x/L_s \quad y' = y/L_s \quad z' = z/L_s \quad t' = at/L_s^2 \tag{5.22}$$

Compared with the steady-state case, an additional dimensional parameter, $\sqrt{at}/L_s$, arises in the scaling of the step-change temperature process.

The formula for the *outdoor step-change heat loss* Q_t (W) has the same structure as (5.10). The temperature difference $T_i - T_0$ is replaced by $0 - T_2$ in accordance with Figure 4.2 and 4.5. We have:

$$Q_t(t) = -\lambda T_2 L_s \cdot h_t \tag{5.23}$$

The dimensionless outdoor *step-change heat loss factor* h_t has the same set of parameters as the periodic case except that d_0/L_s is replaced by $\sqrt{at}/L_s$:

$$h_t = h_t(\sqrt{at}/L_s, L_1/L_s, L_2/L_s, ..., d/L_s, ..., \lambda_1/\lambda, ..., a_1/a, ...) \tag{5.24}$$

For the periodic case the length $d_0 = \sqrt{a t_0/\pi}$ gives an extra parameter for the heat loss factor in comparison with the steady-state case. In the step-change case there is no period time t_0, but the process depends on t. Thus the extra length for the step-change case

compared with the steady-state case is $\sqrt{at}$. This length is used in a way analogous to d_0 in the heat loss factor.

For large times the outdoor step-change heat loss factor approaches the steady-state one:

$$h_t(\infty, L_1/L_s, L_2/L_s, ..., \lambda_1/\lambda, ..., a_1/a, ...) = h_s(L_1/L_s, L_2/L_s, ..., \lambda_1/\lambda, ...) \quad (5.25)$$

For the two-dimensional case the heat loss is denoted by q_t (W/m). The multiplicative length factor L_s vanishes in the heat loss formula (5.23):

$$q_t(t) = -\lambda T_2 \cdot h_t \quad (5.26)$$

The dependence on the parameters for the heat loss factor is of the same type as for the three-dimensional case above.

The *accumulated heat loss* for an outdoor temperature step is denoted by $E_t(t)$ (J). From Formula 2.6 (t_a=0) we have:

$$E_t(t) = \int_0^t Q_t(t')\, dt' \quad (5.27)$$

Inserting (5.23-24) and substitution of at'/L_s^2 with t'' give:

$$E_t(t) = -CT_2 L_s^3 \int_0^{at/L_s^2} h_t(\sqrt{t''}, L_1/L_s, ..)\, dt'' \quad (5.28)$$

We get the following formula for $E_t(t)$:

$$E_t(t) = -CT_2 L_s^3 \cdot e_t(\sqrt{at}/L_s, L_1/L_s, L_2/L_s, ..., d/L_s, ..., \lambda_1/\lambda, ..., a_1/a, ...) \quad (5.29)$$

Here e_t is the *dimensionless accumulated heat loss factor.*

For the two-dimensional case the heat loss is also denoted by E_t (J/m). One multiplicative length factor L_s vanishes in the heat loss formula (5.29):

$$E_t(t) = -CT_2 L_s^2 \cdot e_t(\sqrt{at}/L_s, L_1/L_s, L_2/L_s, ..., d/L_s, ..., \lambda_1/\lambda, ..., a_1/a, ...) \quad (5.30)$$

We have the same formulæ for the indoor step-change temperature case. The heat loss Q_t is replaced by Q_{ti} (W), and the heat loss h_t is replaced by h_{ti}. The temperature $-T_2$ is replaced by T_4. The set of parameters is the same for the indoor and outdoor temperature step solutions.

The thermal build-up is a type of indoor temperature step. There is an indoor temperature step change $T_i - T_0$ instead of T_4. We get the following formula for the *thermal build-up heat loss* Q_{tb} (W):

$$Q_{tb}(t) = \lambda(T_i - T_0) L_s \cdot h_{tb} \quad (5.31)$$

Analogous to (5.24) we get the following formula for the *dimensionless thermal build-up heat loss factor* h_{tb}:

$$h_{tb} = h_{tb}(\sqrt{at}/L_s, L_1/L_s, L_2/L_s, ..., d/L_s, ..., \lambda_1/\lambda, ..., a_1/a, ...) \quad (5.32)$$

The thermal build-up heat loss tends to the steady-state heat loss in accordance with Figure 4.2 and 4.7. Thus for the heat loss factors we get:

$$h_{tb}(\infty, L_1/L_s, ...) = h_s(L_1/L_s, ...) \tag{5.33}$$

For the two-dimensional case the heat loss is denoted by q_{tb} (W/m). The multiplicative length factor L_s vanishes in the heat loss formula (5.31):

$$q_{tb}(t) = \lambda(T_i - T_0) \cdot h_{tb} \tag{5.34}$$

The dependence of the parameters for the heat loss factor is of the same type as for the three-dimensional case above.

In heat balance calculations, it is of interest to know the accumulated heat loss during the thermal build-up period. The heat loss $Q_{tb}(t)$ approaches the steady-state heat loss Q_s as time increases. The difference $Q_{tb}(t) - Q_s$ is expended for the thermal build-up in the ground. The *accumulated thermal build-up heat loss* $E_{tb}(t)$ is defined as the integral of $Q_{tb}(t) - Q_s$:

$$E_{tb}(t) = \int_0^t (Q_{tb}(t') - Q_s)\, dt' \qquad \text{(J)} \tag{5.35}$$

Combining (5.35) with (5.10-11) and (5.31-32) we get:

$$E_{tb}(t) = \lambda(T_i - T_0)L_s \cdot \int_0^t \left[h_{tb}(\sqrt{at'}/L_s, L_1/L_s, ..) - h_s(L_1/L_s, ..)\right] dt' \tag{5.36}$$

Substituting at'/L_s^2 with t'' and using that $a = \lambda/C$, the integral becomes dimensionless. We get:

$$E_{tb}(t) = C(T_i - T_0)L_s^3 \cdot e_{tb} \tag{5.37}$$

Here e_{tb} is the *dimensionless accumulated thermal build-up heat loss factor*. We have:

$$e_{tb} = \int_0^{at/L_s^2} \left[h_{tb}(\sqrt{t''}, L_1/L_s, ..) - h_s(L_1/L_s, ..)\right] dt'' \tag{5.38}$$

The dependence of the parameter for the heat loss factor is of the same type as for h_{tb} since no new parameters have arisen:

$$e_{tb} = e_{tb}(\sqrt{at}/L_s, L_1/L_s, L_2/L_s, ..., d/L_s, ..., \lambda_1/\lambda, ..., a_1/a, ...) \tag{5.39}$$

The result above may be obtained directly from a dimensional analysis. The accumulated heat loss $E_{tb}(t)$ has the dimension (J). The factor $C(T_i - T_0)L_s^3$ has this dimension. Thus the heat loss formula must be of the type (5.37) where e_{tb} is dimensionless.

The two-dimensional accumulated thermal build-up heat loss is also denoted by E_{tb} (J/m). One multiplicative length factor L_s vanishes in the heat loss formula (5.37):

$$E_{tb}(t) = C(T_i - T_0)L_s^2 \cdot e_{tb} \tag{5.40}$$

The dependence of the parameters for the heat loss factor is of the same type as for the three-dimensional case above.

Chapter 6

RANGE OF TEMPERATURE INFLUENCE

Our primary interest is the heat loss and not the temperature fields. In this chapter temperature fields are discussed as background information, and in particular as a prerequisite for the so-called edge approximations of the next chapter.

The outdoor temperature $T_{out}(t)$ induces a temperature field in the ground and in particular below the building. The temperature field also depends on the indoor temperature $T_{in}(t)$. The ground temperature may be divided into the fundamental temperature processes studied in Section 4.2. The mean outdoor temperature T_0 and indoor temperature T_i give the time-independent three-dimensional ground temperature field $T_s(x, y, z)$.

Time-dependent temperature variations such as the outdoor step-change temperature and the outdoor periodic temperature give additional temperature contributions, which are superimposed on the three-dimensional steady-state temperature field. The time-dependent temperature fields will mainly influence the temperature at the perimeter of the building. The perimeter consists of edge lines and corner points. For example, a rectangular slab has four edge lines and four corners. The temperature field at the corners is genuinely three-dimensional. The temperature field induced by a step-change temperature or a periodic variation of the outdoor or the indoor temperature will be essentially two-dimensional in a vertical cross-section perpendicular to the edge line. We will study these two-dimensional *edge temperature processes* in this chapter. Since we are only interested in the temperature behaviour at the edge region we simplify our problem by neglecting the opposite side of the building. The position of the opposite side is extended to infinity. For the example with a slab this means that the width B of the slab is assumed to be infinite.

6.1 UNDISTURBED GROUND

Far away from the building the temperature field is undisturbed by the building. The temperature is one-dimensional, and it depends on time t and depth z only. This one-dimensional temperature is important to study in order to get an understanding of the temperature process in the ground. We neglect the surface resistance at the ground surface, $d_1 = 0$. The outdoor temperature is $T_{out}(t)$. The mean value of the outdoor temperature is T_0. This constant temperature gives the steady-state ground temperature T_0. On this steady-state temperature field we superimpose time-dependent temperature variations. Both the periodic temperature process and the step-change temperature process are studied.

6.1.1 PERIODIC SOLUTION

The outdoor temperature varies periodically. It is described as a sinusoidal temperature variation. The complex-valued periodic temperature in the ground is obtained by an expression of the type (4.28):

$$T_p(z,t) = \Re/\Im\left\{\hat{T}(z)\cdot e^{2\pi i t/t_0}\right\} \tag{6.1}$$

The heat conduction equation and boundary condition for $\hat{T}(z)$ are according to (4.44) and (4.46):

$$\frac{d^2\hat{T}}{dz^2} = \left(\frac{1+i}{d_0}\right)^2 \hat{T} \qquad z > 0 \tag{6.2}$$

$$\hat{T}(0) = T_1 \qquad \hat{T}(\infty) = 0 \tag{6.3}$$

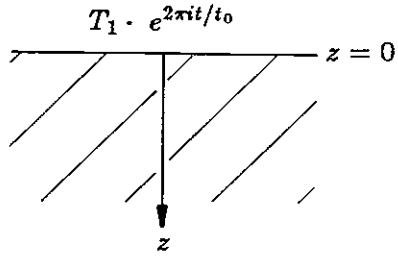

The solution is simple:

$$\hat{T}(z) = T_1 \cdot e^{-(1+i)z/d_0} \tag{6.4}$$

The temperature T_p becomes:

$$T_p(z,t) = \Re/\Im\left\{T_1 \cdot e^{-z/d_0} \cdot e^{i(2\pi t/t_0 - z/d_0)}\right\} \tag{6.5}$$

For the special case $T_p(0,t) = T_1 \cdot \sin(2\pi t/t_0)$, the ground temperature is obtained from the imaginary part of (6.5):

$$T_p(z,t) = T_1 \cdot e^{-z/d_0} \cdot \sin(2\pi(t/t_0 - z/(2\pi d_0))) \tag{6.6}$$

The amplitude of the temperature is damped by the factor:

$$e^{-z/d_0} \tag{6.7}$$

At the depth z the phase delay for the temperature is equal to $z/(2\pi d_0)$ relative to the ground surface temperature. The length d_0 is defined by (4.45):

$$d_0 = \sqrt{\frac{a t_0}{\pi}} \tag{6.8}$$

This length is called the *periodic penetration depth.* It is proportional to the square root of the time period t_0. At the depth $z = d_0$, the amplitude is damped from T_1 to $e^{-1}\cdot T_1 \approx 0.37\cdot T_1$. At the depth $z = 3d_0$, the amplitude is $e^{-3}\cdot T_1 \approx 0.05\cdot T_1$.

The thermal diffusivity of ground materials varies between $0.4\cdot 10^{-6}$ (dry sand) and $1.6\cdot 10^{-6}$ (granite). The figures in Example 6.1 show that the periodic penetration depth varies between 2-4 m for a time period of one year. For a time period of one day the periodic penetration depths are reduced by the factor $1/\sqrt{365}$.

Example 6.1:

$$\begin{array}{ll} & a = 1.6\cdot 10^{-6}\ \mathrm{m^2/s}: \quad d_0 = 4.0\ \mathrm{m} \\ t_0 = 1\ \text{year} & a = 1.0\cdot 10^{-6}\ \mathrm{m^2/s}: \quad d_0 = 3.2\ \mathrm{m} \\ & a = 0.4\cdot 10^{-6}\ \mathrm{m^2/s}: \quad d_0 = 2.0\ \mathrm{m} \end{array}$$

6.1.2 STEP-CHANGE SOLUTION

The heat conduction equation, the boundary conditions, and the initial conditions for the outdoor step-change temperature process are obtained from (4.51-53):

$$\frac{\partial^2 T_t}{\partial z^2} = \frac{1}{a}\frac{\partial T_t}{\partial t} \qquad z > 0 \tag{6.9}$$

$$T_t(0,t) = T_2 \qquad t > 0 \tag{6.10}$$

$$T_t(z,0) = 0 \qquad z > 0 \tag{6.11}$$

The solution is well-known, [13]:

$$T_t(z,t) = T_2 \cdot \mathrm{erfc}\left(\frac{z}{\sqrt{4at}}\right) \tag{6.12}$$

Here erfc is the complementary error function:

$$\mathrm{erfc}(y) = \frac{2}{\sqrt{\pi}}\int_y^\infty e^{-s^2}\,ds \tag{6.13}$$

The function is tabulated for example in [13]. The temperature at the depth $z = \sqrt{at}$ is equal to $\mathrm{erfc}(0.5)\cdot T_2 \approx 0.48 \cdot T_2$. At the depth $z = 2.3\sqrt{at}$ the temperature is $0.1 \cdot T_2$, and at the depth $z = 3.6\sqrt{at}$ the temperature is $0.01 \cdot T_2$. Example 6.2 gives the basic penetration length $\sqrt{at}$ (m) for a few times:

Example 6.2:

t	1 day	7 days	1 month	3 months
$\sqrt{at}$	0.29 m	0.78 m	1.6 m	2.8 m

a=$1.0\cdot10^{-6}$ m^2/s

6.2 PENETRATION OF OUTDOOR TEMPERATURE UNDER THE SLAB

The two-dimensional thermal process at the edge of a slab is studied in this section. The outdoor temperature varies periodically, or there is a step-change in the outdoor temperature. The indoor temperature is zero. We neglect the surface resistance at the ground surface, $d_1 = 0$.

6.2.1 PERIODIC SOLUTION

Figure 6.1 shows the heat conduction problem where the outdoor temperature varies periodically. The complex-valued outdoor temperature is $T_1 \cdot \exp(2\pi i t/t_0)$. The indoor temperature is zero. The equivalent insulation thickness of the slab is d. The real-valued temperature $T_p(x,z,t)$ is obtained from (4.28). The complex-valued temperature $\hat{T}$ is given by $T_1 \cdot \hat{U}$, where $\hat{U}$ is dimensionless:

$$T_p(x,z,t) = \Re/\Im\left\{T_1 \cdot \hat{U}(x,z) \cdot e^{2\pi i t/t_0}\right\} \tag{6.14}$$

The periodic temperature problem contains two coordinates x and z, and the lengths d and d_0. In scaled form the temperature $\hat{U}$ depends on $x/d_0, z/d_0$ and d/d_0.

The temperature in the ground under the insulation is of particular interest. Figure 6.2 shows the temperature under the insulation ($z = 0$) as a function of x/d_0 for two values of d/d_0. In the case $d/d_0 = 1$ the temperature is calculated numerically, and for $d/d_0 = \infty$

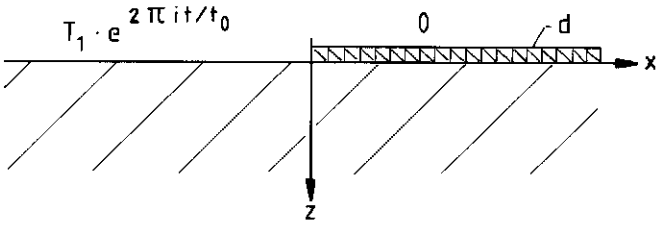

Figure 6.1: Two-dimensional edge problem for a periodic outdoor temperature.

the temperature is obtained from the analytical formula (6.15) given below. The curves for the amplitude and phase of the temperature in undisturbed ground (6.4) are shown by the dashed curves in the figure.

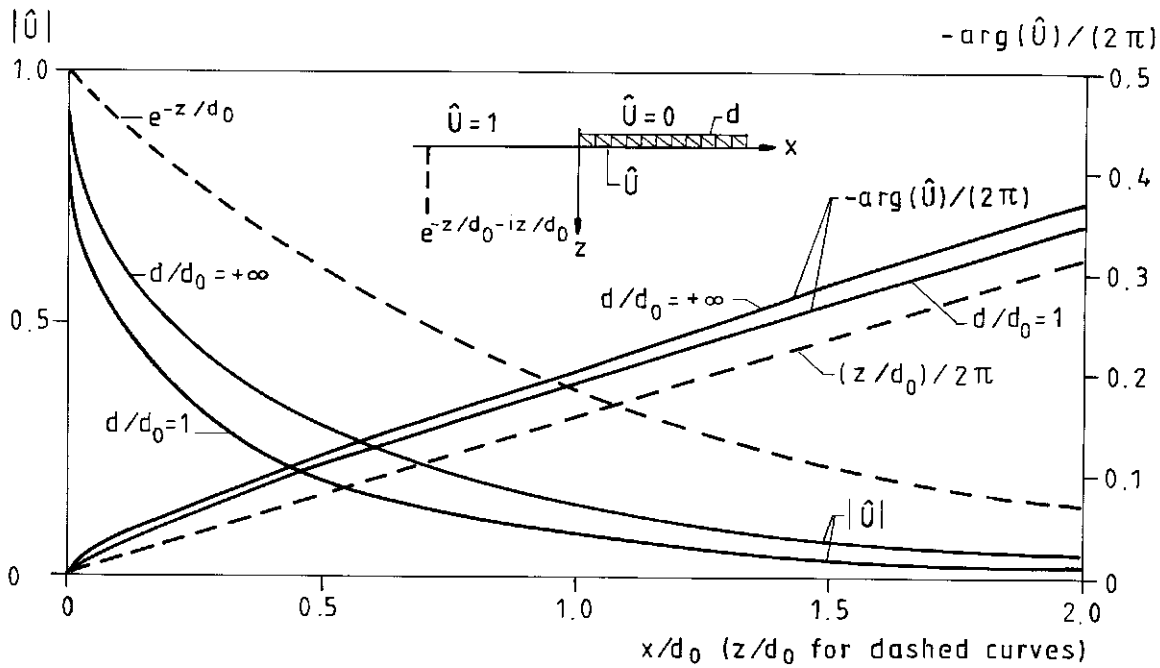

Figure 6.2: Temperature under the insulation for a periodic outdoor temperature. The dashed curves give the temperature in undisturbed ground.

The figure shows how the amplitude under the slab is damped for increasing x/d_0. At $x = 0$ the amplitude is 1 and the phase is zero. For the case $d = d_0$ the amplitude is damped to 0.5 at $x = 0.1 \cdot d_0$, to 0.2 at $x = 0.5 \cdot d_0$, to 0.08 at $x = d_0$, and to 0.02 at $x = 2 \cdot d_0$.

The penetration depth underneath the slab depends on the size of the thermal insulation, i.e. d. The amplitude increases for increasing d. The case $d = \infty$ gives the upper limit for penetration of the periodic temperature underneath the slab, since there is no cooling of the ground by the zero indoor temperature. The temperature solution for the special case $d = \infty$ is given by Formula 3.2.1 in the supplementary report [2]. The analytical solution for the temperature under the insulation is:

$$\hat{U}(x,0) = \operatorname{erfc}\left(\sqrt{(1+i)x/d_0}\right) \qquad d = \infty \tag{6.15}$$

Here erfc has a complex-valued argument. The amplitude and the phase are shown in Figure 6.2. The amplitude is damped to 0.5 at $x = 0.2 \cdot d_0$, to 0.15 at $x = d_0$, and to 0.05 at $x = 2 \cdot d_0$.

The function (6.15) is studied in detail in [2]. From Formula 3.2.3 in [2], we have the following approximation for the amplitude for small values of x/d_0

$$|\hat{U}(x,0)| \approx 1 - 1.24\sqrt{x/d_0} \qquad x/d_0 < 0.1,\ d = \infty \tag{6.16}$$

For large values of x/d_0 we have from Formula 3.2.6 in [2]:

$$|\hat{U}(x,0)| \approx 0.47\sqrt{d_0/x} \cdot e^{-x/d_0} \qquad x/d_0 > 1.5,\ d = \infty \tag{6.17}$$

The phase delay of the temperature in the ground under the slab increases for increasing x. According to Figure 6.2 the phase delay varies approximately linearly with x/d_0. At $x = d_0$ the phase delay is 0.2 for $d/d_0 = \infty$, and 0.19 for $d/d_0 = 1$. This means a time delay of $0.2 \cdot t_0$. The maximum temperature at $x = d_0$ occurs $0.2 \cdot t_0$ after the time for maximum outdoor temperature.

From the study of the case $d = \infty$, which gives the largest temperature influence under the slab, we can draw important conclusions. The amplitude of the temperature under the slab is less than 15% of the outdoor temperature amplitude at a distance of d_0 or more from the edge line.

6.2.2 STEP-CHANGE SOLUTION

Figure 6.3 shows the heat conduction problem for the outdoor temperature step. The temperature rises from zero to T_2 at $t = 0$. The indoor temperature and the initial ground temperature are zero. The equivalent insulation thickness of the slab is d.

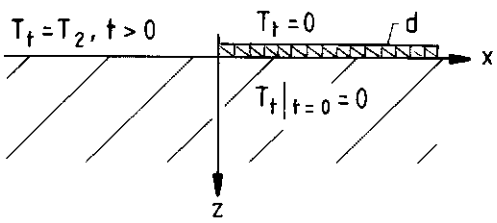

Figure 6.3: Two-dimensional edge problem for a step-change of the outdoor temperature.

Using the non-dimensional temperature U, the temperature T_t can be written as:

$$T_t(x,z,t) = T_2 \cdot U(x,z,t) \tag{6.18}$$

The step-change temperature problem contains the coordinates x and z, and the lengths $\sqrt{at}$ and d. In scaled form we use the following dimensionless variables: $x/\sqrt{at}, z/\sqrt{at}$ and $d/\sqrt{at}$.

Figure 6.4 shows the temperature under the insulation $z = 0, x > 0$. The temperature is calculated numerically for $d/\sqrt{at}$ equal to 0.1 and 0.5. The temperature for the case $d/\sqrt{at} = \infty$ is obtained from the analytical solution (6.19) given below. The curve for the temperature in undisturbed ground (6.12) is also shown in the figure.

The penetration depth underneath the slab depends on the size of the thermal insulation, i.e. d. The temperature increases for increasing d. The case $d = \infty$ gives the upper limit for temperature penetration underneath the slab, since there is no cooling of the ground by the zero indoor temperature. The temperature solution for the special case $d = \infty$ is given by

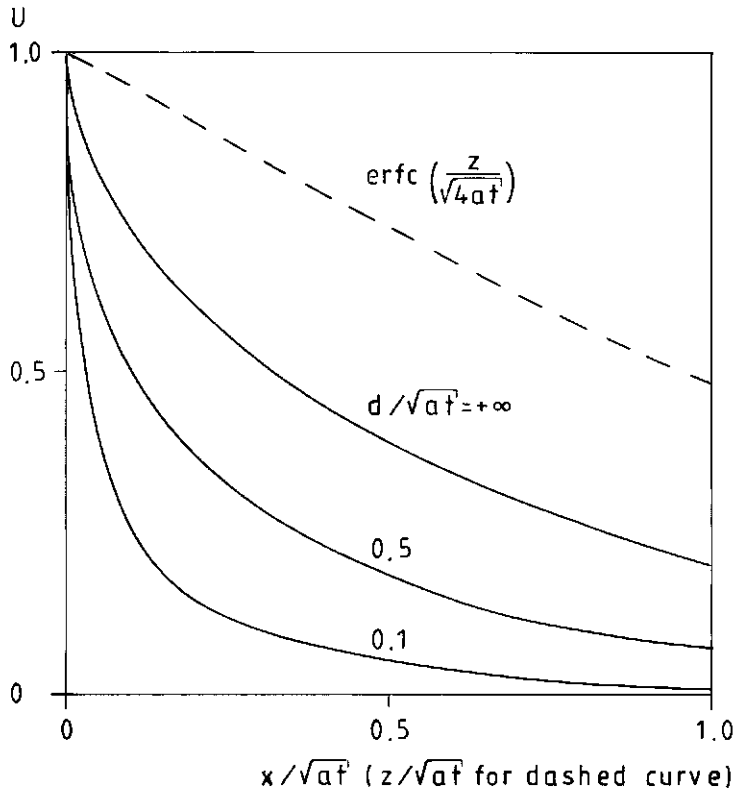

Figure 6.4: Temperature under the insulation for a step-change of the outdoor temperature. The dashed curve gives the temperature in undisturbed ground.

Formula 2.3.1 in the supplementary report [2]. The analytical solution for the temperature under the insulation is:

$$U(x,0,t) = \frac{2}{\pi}\int_0^\infty \operatorname{erfc}\left(\frac{(s^2+1)x/\sqrt{at}}{2}\right)\frac{1}{s^2+1}\,ds \qquad d=\infty \tag{6.19}$$

The complementary error function erfc is defined in (6.13). The integral in (6.19) has been evaluated numerically. The temperature U is shown in Figure 6.4 by the curve $d/\sqrt{at}=\infty$.

For small values of $x/\sqrt{at}$ we have the following approximation from Formula 2.3.6 in [2]:

$$U(x,0,t) \approx 1 - 0.92\sqrt{x/\sqrt{at}} \qquad x/\sqrt{at} < 0.3, d=\infty \tag{6.20}$$

For large values of $x/\sqrt{at}$, Formula 2.3.8 in [2] gives the following approximation:

$$U(x,0,t) \approx \frac{2\sqrt{2}}{\pi}e^{-x^2/(4at)}\cdot\frac{at}{x^2} \qquad x/\sqrt{at} > 3, d=\infty \tag{6.21}$$

The temperature at the ground surface is 1. At $x/\sqrt{at}=0.3$ the temperature is 0.5, at $x/\sqrt{at}$=1 it is 0.2, at $x/\sqrt{at}=1.5$ it is 0.1, and at $x/\sqrt{at}=2.8$ the temperature is 0.01.

We can draw the following conclusion for the temperature influence under the slab due to an outdoor temperature step. We have a weak influence with less than 20% of the outdoor temperature at a distance of $\sqrt{at}$ or more from the edge line.

6.3 INDOOR TEMPERATURE VARIATION UNDER THE SLAB

The two-dimensional thermal process at the edge of a slab is studied in this section. The indoor temperature varies periodically or we have a step-change in the indoor temperature. The outdoor temperature is zero. We neglect the surface resistance at the ground surface, $d_1=0$.

6.3.1 PERIODIC SOLUTION

Figure 6.5 shows the heat conduction problem where the indoor temperature varies periodically. The complex-valued indoor temperature is $T_3\cdot\exp(2\pi it/t_3)$. The outdoor temperature is zero. The equivalent insulation thickness of the slab is d.

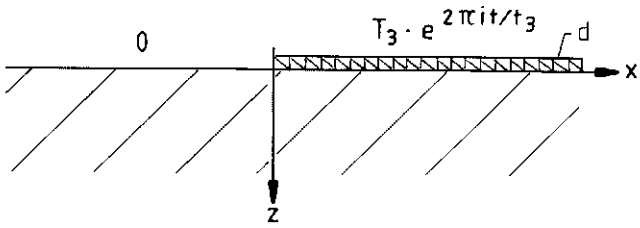

Figure 6.5: Two-dimensional edge problem for a periodic indoor temperature.

The real-valued temperature $T_{pi}(x,z,t)$ is obtained from (4.47). The complex-valued temperature $\hat{T}_{pi}$ is given by $T_3\cdot\hat{U}$, where $\hat{U}$ is dimensionless:

$$T_{pi}(x,z,t) = \Re/\Im\left\{T_3 \cdot \hat{U}(x,z) \cdot e^{2\pi i t/t_3}\right\} \tag{6.22}$$

The periodic temperature problem contains the coordinates x and z, and the lengths d and d_3. In scaled form the temperature depends on $x/d_3, z/d_3$ and d/d_3.

Figure 6.6 shows the numerically calculated temperature under the insulation ($z = 0$) as a function of x/d_3 for $d/d_3 = 1$.

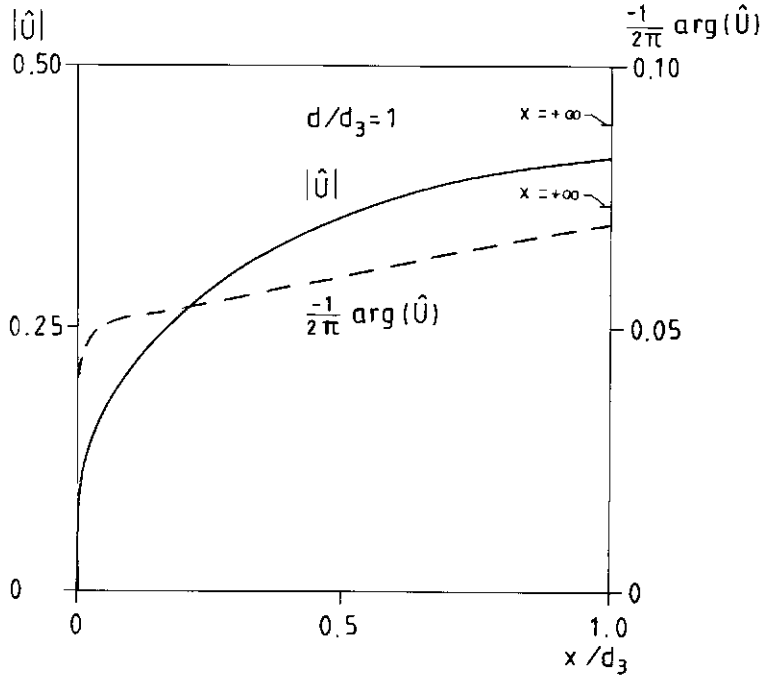

Figure 6.6: Temperature under the insulation for a periodic indoor temperature.

The temperature under the slab far away from the edge is approximately one-dimensional. From (2.3.4) (with $d_0 = d_3$ and $y = z$) in the supplementary report [1], we get the following formula for this temperature.

$$\hat{U}(\infty, z) = \frac{1}{1 + d(1+i)/d_3} e^{-(1+i)z/d_3} \tag{6.23}$$

The amplitude and phase for this temperature are given in Figure 6.6 ($x = +\infty$) for the case $d/d_3 = 1$.

We see that the temperature at $x = d_3$ has dropped by only 7% compared with the temperature at $x = +\infty$.

Far away from the edge the temperature field is approximately one-dimensional, (6.23). Near the edge the temperature under the slab approaches the ground surface temperature, which is zero. At a distance of d_3 or more from the edge the ground temperature under the slab differs by less than 10 % from the one-dimensional solution.

6.3.2 STEP-CHANGE SOLUTION

Figure 6.7 shows the heat conduction problem for the indoor temperature step. The temperature rises from zero to T_4 at $t = 0$. The outdoor temperature and the initial ground temperature are zero. The equivalent insulation thickness of the slab is d.

Using a non-dimensional temperature U, the temperature T_{ti} can be written as:

$$T_{ti}(x,z,t) = T_4 \cdot U(x,z,t) \tag{6.24}$$

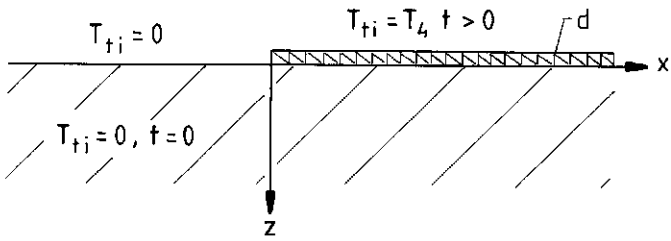

Figure 6.7: Two-dimensional edge problem for a step-change of the indoor temperature.

The step-change temperature problem contains the coordinates x and z, and the lengths $\sqrt{at}$ and d. In scaled form we use the following dimensionless variables: $x/\sqrt{at}, z/\sqrt{at}$ and $d/\sqrt{at}$.

Figure 6.8 shows the temperature under the insulation $z = 0, x > 0$. The temperature is calculated numerically for a few insulation thicknesses.

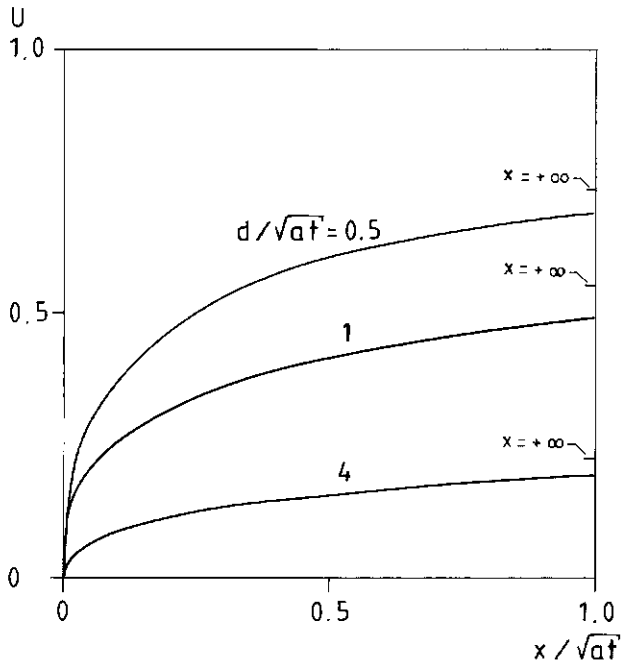

Figure 6.8: Temperature under the insulation for a step-change of the indoor temperature.

The temperature under the slab far away from the edge is one-dimensional. From (2.4.5) (with $y = z$) in [1] we get the following formula for this temperature:

$$U(\infty, z) = \operatorname{erfc}\left(\frac{z}{\sqrt{4at}}\right) - e^{z/d + at/d^2} \cdot \operatorname{erfc}\left(\frac{z}{\sqrt{4at}} + \frac{\sqrt{at}}{d}\right) \tag{6.25}$$

This temperature is given in Figure 6.8 by the points $x = +\infty$.

The temperature in the ground under the insulation near the edge is of particular interest. We see that the temperature at $x = \sqrt{at}$ has dropped by 10% compared with the temperatures at $x = +\infty$.

Far away from the edge the temperature field is approximately one-dimensional, (6.25). Near the edge the temperature under the slab approaches the ground surface temperature, which is zero. At a distance of $\sqrt{at}$ or more from the edge the ground temperature under the slab differs by less than 10 % from the one-dimensional solution.

6.4 CELLAR WALL

Figure 6.9 shows the conditions for the two-dimensional thermal process at the edge of a cellar. The height of the cellar is H. The equivalent insulation thickness of the floor is d and for the wall d_w. We neglect the surface resistance at the ground surface, $d_1 = 0$. The outdoor temperature $T_{out}(t)$ varies periodically, or we have a step-change in the outdoor temperature. The indoor temperature T_{in} is zero.

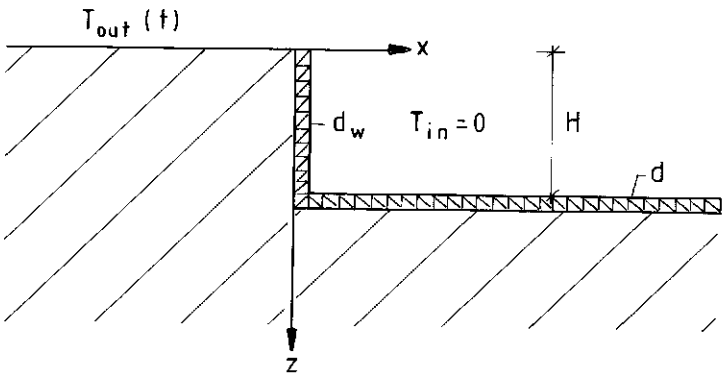

Figure 6.9: Two-dimensional edge problem for a cellar.

The case with an infinite depth of the cellar ($H = \infty$) is solved in supplementary report, [3]. The solution will be used here in order to get the maximum temperature influence at the wall.

For the case of finite cellar depth the region around $z = H$ is cooled by the horizontal floor surface. For the cellar of infinite depth this region is cooled by the vertical wall along $x = 0, z > H$. For the case $d < d_w$, which is the more common case, we have a higher degree of cooling in the case with a finite cellar depth, since the cellar of infinite depth has the thermal insulation d_w all over the vertical surface. Furthermore, the region $z > H, x > 0$ requires heat and acts as a heat sink region, which also reduces the amplitude of the temperature. Thus the maximum influence of the temperature is obtained from the case of infinite cellar depth.

6.4.1 PERIODIC SOLUTION

Figure 6.10 shows the heat conduction problem with a cellar of infinite depth where the outdoor temperature varies periodically. The complex-valued outdoor temperature is $T_1 \cdot \exp(2\pi i t/t_0)$. The indoor temperature is zero. The equivalent insulation thickness of the wall is d_w. The ground temperature at the insulation is of particular interest.

Real-valued solutions for the temperature are obtained from (6.14). The non-dimensional, complex-valued temperature $\hat{U}$ is obtained from Formula 3.18 (with $y = z$) in [3]:

$$\hat{U} = \frac{1}{\sqrt{\pi}} \int_0^\infty e^{-(2i/d_0^2 - 1/d_w^2)z^2/s^2 - s^2/4} \operatorname{erfc}\left(\frac{z}{s d_w}\right) ds \qquad x = 0, z > 0 \tag{6.26}$$

For the special case $d_w = \infty$ we have the well-known solution, which has already been given in (6.4):

$$\hat{U} = e^{-(1+i)z/d_0} \tag{6.27}$$

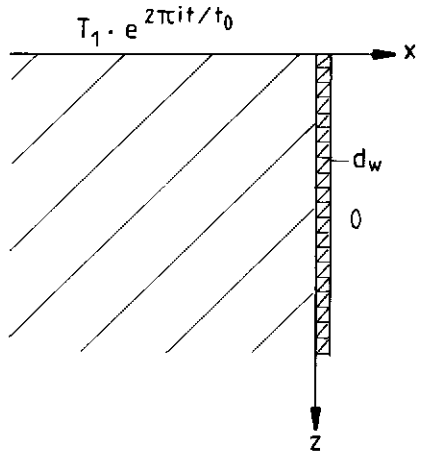

Figure 6.10: Two-dimensional edge problem for a cellar of infinite depth and periodic outdoor temperature.

The integral (6.26) is evaluated numerically. The amplitude and phase of the temperature $\hat{U}(0,z)$ are shown in Figure 6.11.

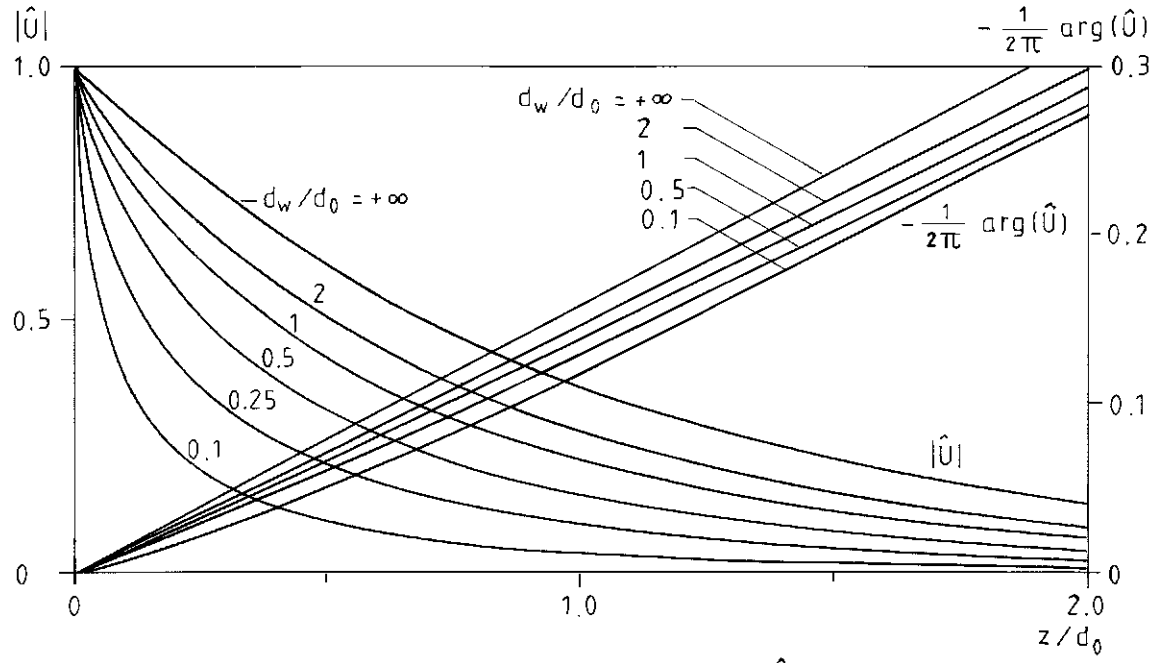

Figure 6.11: Absolute value and phase for the temperature $\hat{U}(0,z)$ at the cellar wall for an infinitely deep cellar.

For the case $d_w = d_0$ the amplitude is damped to 0.5 at $z = 0.4 \cdot d_0$, and to 0.2 at $z = 1.1 \cdot d_0$. For $d_w = \infty$ the amplitude is damped to 0.67 at $z = 0.4 \cdot d_0$, and to 0.37 at $z = 1 \cdot d_0$. This case may be compared with the temperature under a slab. See Figure 6.1-2. As a rule-of-thumb the amplitude at the wall at a certain distance from the ground surface is twice as large as the amplitude under a slab for the same distance.

6.4.2 STEP-CHANGE SOLUTION

Figure 6.12 shows the edge problem for the outdoor temperature step. The temperature rises from zero to T_2 at $t = 0$. The indoor temperature and the initial ground temperature are zero. The equivalent insulation thickness of the wall is d_w. The ground temperature at the insulation is of particular interest. It shows the influence due to the outdoor temperature.

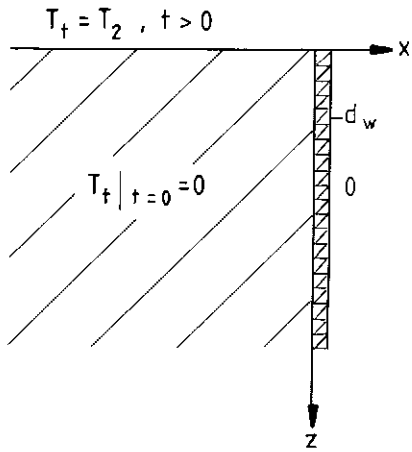

Figure 6.12: Two-dimensional edge problem for a cellar of infinite depth with a step-change in the outdoor temperature.

Using (6.18) for the temperature, and Formula 4.11 (with $y = z$) in [3] for the non-dimensional temperature U, we get:

$$U(0,z,t) = \frac{1}{\sqrt{\pi}} \int_{z/\sqrt{at}}^{\infty} e^{z^2/(s^2 d_w^2) - s^2/4} \operatorname{erfc}\left(\frac{z}{s d_w}\right) ds \quad x = 0, z > 0, t > 0 \tag{6.28}$$

For the special case $d_w = \infty$ we have a well-known solution, which has already been given in (6.12):

$$U = \operatorname{erfc}(z/\sqrt{4at}) \tag{6.29}$$

The integral (6.28) is evaluated numerically. The temperature $U(0,z,t)$ is shown in Figure 6.13.
For the case $\sqrt{at}/d_w = 1.0$ the temperature is damped to 0.5 at $z = 0.46 \cdot \sqrt{at}$, and to 0.2 at $z = 1.25 \cdot \sqrt{at}$. For the case $\sqrt{at}/d_w = 0$ the temperature is damped to 0.72 at $z = 0.50 \cdot \sqrt{at}$, to 0.48 at $z = 1 \cdot \sqrt{at}$, and to 0.16 at $z = 2 \cdot \sqrt{at}$.

This case may be compared with the temperature under a slab. See Figure 6.3-4. The temperature at the wall at a certain distance from the ground surface is twice as large as the temperature under a slab for the same distance.

6.5 CELLAR FLOOR

The heat conduction problem at the edge of a building with finite depth of the cellar is studied in this section. The problem is illustrated in Figure 6.9. The outdoor temperature varies periodically or there is a step-change in the outdoor temperature. The indoor temperature is zero.

No complete solution for the temperature under the floor will be given. Only estimations of the maximum temperature influence are given.

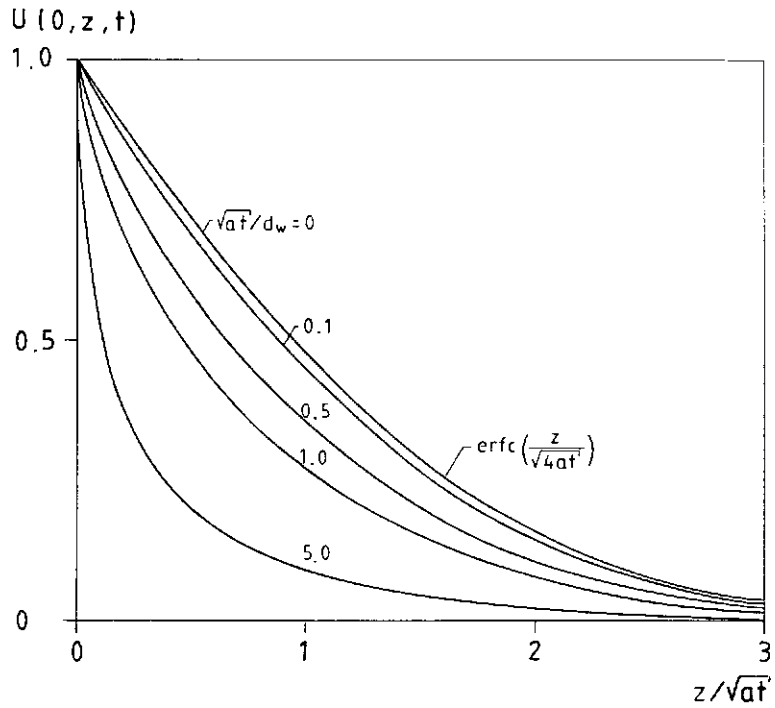

Figure 6.13: The temperature $U(0, z, t)$ at the cellar wall for an infinitely deep cellar.

6.5.1 PERIODIC SOLUTION

The maximum influence under the floor can be estimated by the results from Section 6.2.1 and 6.4.1. We assume that the wall and floor insulation are infinite ($d = d_w = +\infty$). The real-valued temperature is obtained from (6.14). From (6.27) we get the following approximation for the dimensionless complex-valued temperature at the depth $z = H$:

$$\hat{U} = e^{-(1+i)H/d_0} \tag{6.30}$$

This is also the temperature in undisturbed ground. See Section 6.1.1. Thus we have an approximately constant temperature at the plane $z = H$ in the ground outside the cellar. The temperature under the floor insulation can be obtained from the formulæ for a slab (6.14-15), where the outdoor temperature amplitude T_1 is replaced by $T_1 \cdot \exp(-(1+i)H/d_0)$. We get the following approximation for the maximum temperature under the cellar floor:

$$\hat{U} = e^{-(1+i)H/d_0} \cdot \operatorname{erfc}\left(\sqrt{(1+i)x/d_0}\right) \qquad x > 0,\ z = H,\ d = \infty \tag{6.31}$$

The temperature is obtained from Figure 6.2 ($d/d_0 = \infty$), where the amplitude is reduced by the factor $\exp(-H/d_0)$. The phase is obtained by adding $H/(2\pi d_0)$. The amplitude at $x = d_0$ is 0.15 for $H/d_0 = 0$, 0.09 for $H/d_0 = 0.5$, 0.06 for $H/d_0 = 1$, and 0.03 for $H/d_0 = 1.5$.

6.5.2 STEP-CHANGE SOLUTION

The maximum temperature influence under the floor can be estimated by the results from Section 6.2.2 and 6.4.2. We assume that the wall and floor insulation is infinite ($d = d_w = +\infty$). The temperature for $z = H$ is obtained from (6.18), where the non-dimensional temperature is given by (6.29):

$$U = \operatorname{erfc}(H/\sqrt{4at}) \tag{6.32}$$

This is also the temperature in undisturbed ground. See Section 6.1.2. Thus we have an approximately constant temperature at the plane $z = H$ in the ground outside the cellar at the time t. The temperature under the floor insulation can be obtained from the formulæ for a slab where the outdoor temperature T_2 is replaced by a time-dependent temperature $T_2 \cdot \mathrm{erfc}(H/\sqrt{4at})$. The step-change solution is known from (6.19). The solution for this case with a time-dependent temperature is obtained by superposition technique, see Section 4.3.2. Using Duhamel's theorem in [13] or (4.19-21) with the heat loss step-response function Q_t in (4.21) replaced by the temperature response function (6.19), we get:

$$U = \int_0^t \mathrm{erfc}(H/\sqrt{4a\tau}) \frac{\partial}{\partial t} \left\{ \frac{2}{\pi} \int_0^\infty \mathrm{erfc}\left(\frac{(s^2+1)x/\sqrt{a(t-\tau)}}{2} \right) \frac{1}{s^2+1}\, ds \right\} d\tau \qquad (6.33)$$

We get the following approximation for the maximum temperature under the cellar floor:

$$U = \frac{4}{\sqrt{\pi}\pi} \int_{x/\sqrt{4at}}^\infty \left\{ \mathrm{erfc}\left(\frac{H/\sqrt{4at}}{\sqrt{1 - x^2/(4at\alpha^2)}} \right) \int_0^\infty e^{-(s^2+1)^2\alpha^2}\, ds \right\} d\alpha \qquad (6.34)$$

$$x > 0,\ z = H,\ d = \infty$$

The temperature is evaluated by numerical integration. It is given in Figure 6.14 for some values of $H/\sqrt{at}$.

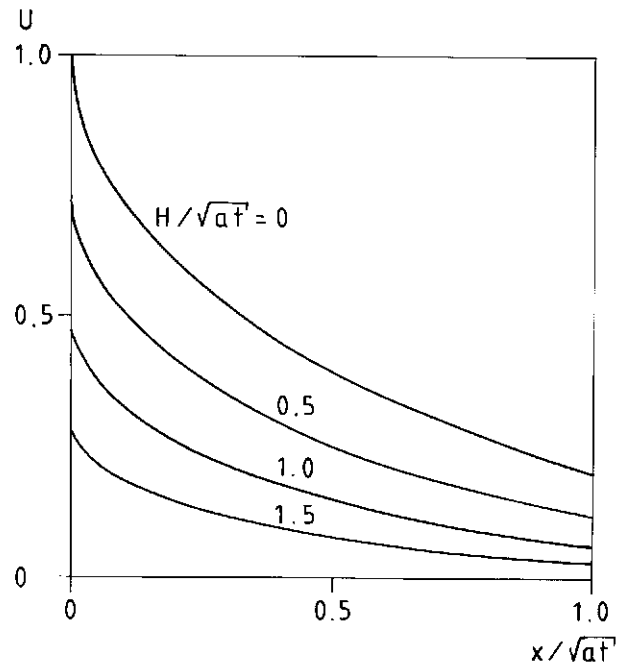

Figure 6.14: Maximum temperature under a cellar floor according to (6.34).

The temperature at $x = \sqrt{at}$ is 0.2 for $H/\sqrt{at} = 0$, 0.12 for $H/\sqrt{at} = 0.5$, 0.06 for $H/\sqrt{at} = 1$, and 0.03 for $H/\sqrt{at} = 1.5$.

Chapter 7

EDGE APPROXIMATIONS

The range of temperature influence from step-changes and periodic outdoor temperatures is studied in Chapter 6. It is shown that the temperature influence under a slab or a cellar is weak at a distance greater than $\sqrt{at}$ (m) from the edge line for the step-change case. Here a (m^2/s) is the thermal diffusivity of the ground. For the periodic case the influence under a slab or a cellar is weak at a distance greater than d_0 (m) from the edge line. Here d_0 is the periodic penetration depth.

Time-dependent temperature variations such as the outdoor step-change temperature and the outdoor periodic temperature give additional temperature contributions, which are superimposed on the three-dimensional steady-state temperature field. The time-dependent temperature fields will mainly influence the temperature at the perimeter of the building. At the corners of the building the temperature field is three-dimensional. The temperature field at the edge lines will be essentially two-dimensional in a vertical cross-section, perpendicular to the edge line of the building. We will neglect the influence from the opposite edge. An approximation of the heat loss for the building is obtained by multiplying the heat loss obtained from the two-dimensional edge problem by the perimeter length. This *edge approximation* is studied in this chapter.

The corner effects are neglected in the edge approximation. The error due to this simplification is studied in Section 7.3.

7.1 PERIODIC SOLUTION

Figure 7.1 illustrates the general outdoor periodic heat conduction problem for a cellar. The periodic outdoor temperature is $T_1 \cdot \exp(2\pi i t/t_0)$, and the indoor temperature is zero. According to (5.17) the real-valued heat loss is obtained from:

$$Q_p(t) = \Re/\Im\left\{-\lambda T_1 L \cdot h_p \cdot e^{2\pi i t/t_0}\right\} \tag{7.1}$$

There are 7 length parameters in the problem: L, B, H, d, d_w, d_1, and d_0. According to the scaling rules the heat loss depends on $7 - 1 = 6$ parameters:

$$h_p = h_p(L/d_0, B/d_0, H/d_0, d_w/d_0, d/d_0, d_1/d_0) \tag{7.2}$$

The temperature field at the perimeter of the building is essentially two-dimensional in a vertical cross-section perpendicular to the edge line. For a building with a width and a length much larger than the periodic penetration depth d_0, it is sufficient to study this two-dimensional temperature process at the edge of the building. For the validity of this we introduce the condition $d_0 < L_{min}/2$. Here L_{min} is the minimum dimension of the foundation in the horizontal plane. For a rectangular building it is equal to B. The edge problem is

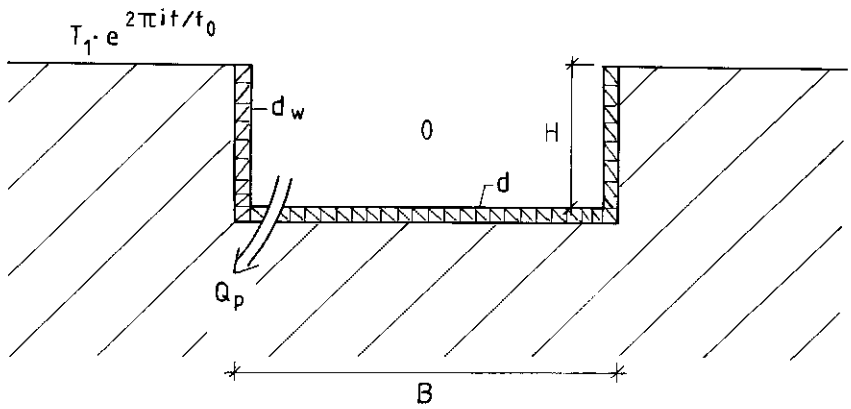

Figure 7.1: Periodic heat loss for a cellar.

illustrated in Figure 7.2. The influence from the opposite edge is neglected. We simplify the problem by studying a cellar of infinite width. The edge heat loss for a periodic outdoor temperature is denoted by q_p (W/m).

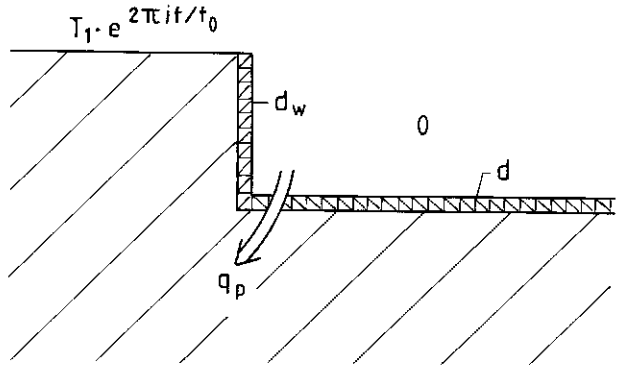

Figure 7.2: Periodic edge heat loss for a cellar.

The periodic heat loss for the building becomes approximately:

$$Q_p(t) = L_e \cdot q_p(t) \qquad d_0 < L_{min}/2 \tag{7.3}$$

$$q_p(t) = \Re/\Im\left\{-\lambda T_1 \cdot h_p \cdot e^{2\pi i t/t_0}\right\} \tag{7.4}$$

Here L_e is the perimeter length of the building. For a rectangular house it is equal to $2L+2B$. There are 5 geometric parameters left in the problem. The edge approximation reduces the number of parameters by two. According to the scaling rules the heat loss depends on $5-1=4$ dimensionless parameters:

$$h_p = h_p(H/d_0, d_w/d_0, d/d_0, d_1/d_0) \tag{7.5}$$

7.2 STEP-CHANGE SOLUTION

Figure 7.3 illustrates the heat conduction problem for a cellar for an outdoor temperature step. The outdoor temperature rises from zero to T_2 at $t = 0$. The indoor temperature and the initial ground temperature are zero.

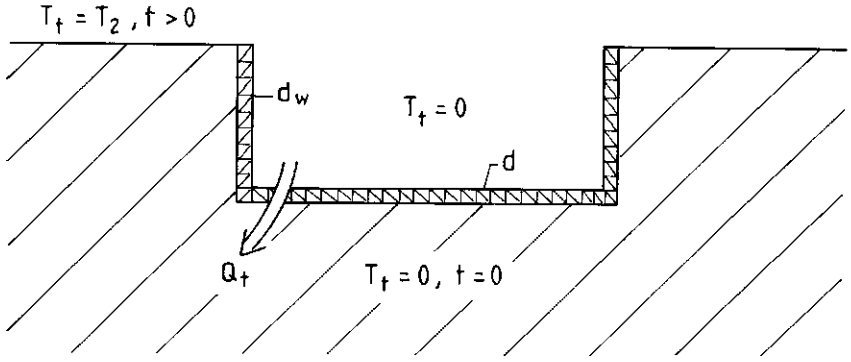

Figure 7.3: Step-change heat loss for a cellar.

According to (5.23) the heat loss becomes:

$$Q_t(t) = -\lambda T_2 L \cdot h_t \tag{7.6}$$

There are 7 length parameters in the problem: $\sqrt{at}, L, B, H, d, d_w$, and d_1. According to the scaling rules the heat loss depends on $7 - 1 = 6$ parameters:

$$h_t = h_t(\sqrt{at}/H, L/H, B/H, d_w/H, d/H, d_1/H) \tag{7.7}$$

The temperature field at the perimeter of the building is essentially two-dimensional in a vertical cross-section perpendicular to the edge line. For a building with a width and a length much larger than the length $\sqrt{at}$, it is sufficient to study this two-dimensional temperature process at the edge of the building. For the validity of this we introduce the condition $\sqrt{at} < L_{min}/2$. Here L_{min} is the minimum dimension of the foundation in the horizontal plane. For a rectangular building it is equal to B. The edge problem is illustrated in Figure 7.4. The influence from the opposite edge is neglected. We simplify the problem by studying a cellar of infinite width. The edge heat loss for a temperature step in the outdoor temperature is denoted by q_t (W/m).

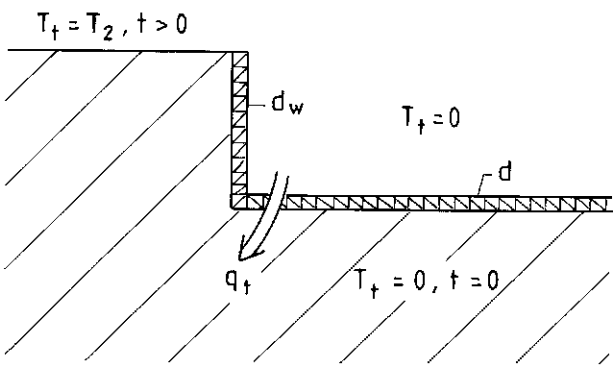

Figure 7.4: Edge heat loss for a cellar.

The step-change heat loss for the whole building becomes:

$$Q_t(t) = L_e \cdot q_t(t) \qquad \sqrt{at} < L_{min}/2 \tag{7.8}$$

$$q_t(t) = -\lambda T_2 \cdot h_t \tag{7.9}$$

Here L_e is the perimeter length of the building. For a rectangular house it is equal to $2L+2B$. There are 5 geometric parameters left in the problem. According to the scaling rules the heat loss depends on $5-1=4$ dimensionless parameters.

$$h_t = h_t(\sqrt{at}/H, d_w/H, d/H, d_1/H) \tag{7.10}$$

In the condition $\sqrt{at} < L_{min}/2$ for validity of the edge approximation for a rectangular building, the depth of the cellar has been neglected ($H=0$). This gives the case of maximum temperature influence under the building. It is, so to speak, the worst case. A second reason for neglecting the depth of the building is that we have a finite width of the building. The influence of the temperature process at the edge lines from the corners increases with increasing time. The time-scale for this process is the same as for the temperature influence under the building. This is studied for a rectangular slab in the next section.

7.3 THREE-DIMENSIONAL CORNER EFFECTS

In this section the effect on the heat loss due to the three-dimensional temperature field at the corners is studied. The aim of the study is to determine if the edge approximation overestimates or underestimates the heat loss of a rectangular building. The outdoor step-change temperature process is studied for a rectangular slab. However the results are valid for the outdoor periodic temperature process as well.

Figure 7.5 shows the heat conduction problem in the corner region of a slab with the equivalent insulation thickness d. To isolate the corner effect we consider an extended corner region $y>0, x<0, z=0$. We neglect the other edge lines and corners of the slab. We have a unit step-change ($T_2=1$) in the outdoor temperature. The indoor temperature and the initial ground temperature are zero.

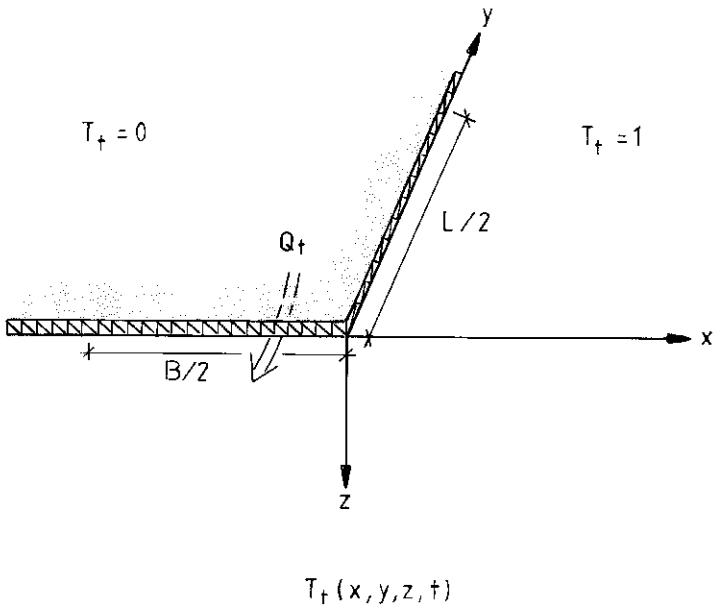

Figure 7.5: Heat conduction problem at the corner of a rectangular slab.

We want to predict the heat loss from a part of the corner $-B/2 < x < 0$, $0 < y < L/2$, $z=0$. We assume that $\sqrt{at} \ll B$.

Figure 7.6 shows the corresponding two-dimensional edge problem. The slab occupies the region $y>0$, $z=0$. We have a unit step-change at the ground surface $y<0$, $z=0$. The indoor temperature and the initial ground temperature are zero. The two-dimensional

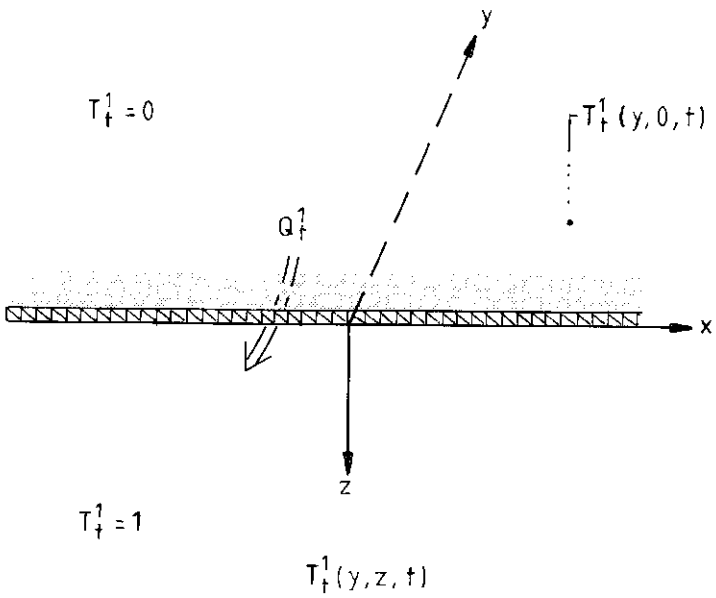

Figure 7.6: Edge approximation of the heat loss due to the two-dimensional temperature field $T_t^1(y,z,t)$.

temperature is denoted by $T_t^1(y,z,t)$. The temperature at the ground surface below the thermal insulation is $T_t^1(y,0,t)$. The number 1 refers to the first component in a superposition of a total of three components. The edge heat loss is denoted by q_t^1 (W/m). The step-change heat loss Q_t^1 over the corner region $-B/2 < x < 0, y > 0, z = 0$ is:

$$Q_t^1 = q_t^1 \cdot B/2 \tag{7.11}$$

Figure 7.7 shows the corresponding two-dimensional edge problem at the edge line $x = 0$. The slab occupies the region $x < 0$, $z = 0$. We have a unit step-change at the ground surface $x > 0$, $z = 0$. The indoor temperature and the initial ground temperature are zero. The two-dimensional temperature is denoted by $T_t^2(x,z,t)$. The temperature at the ground surface below the thermal insulation is $T_t^2(x,0,t)$. The edge heat loss is denoted by q_t^2 (W/m). The step-change heat loss Q_t^2 over the slab region $0 < y < L/2, x < 0, z = 0$ is:

$$Q_t^2 = q_t^2 \cdot L/2 \tag{7.12}$$

The temperature field T_t^1 and T_t^2 gives the edge approximation for the corner region. In the next step we superimpose the two temperature fields:

$$T_t^{12}(x,y,z,t) = T_t^1(y,z,t) + T_t^2(x,z,t) \tag{7.13}$$

The heat conduction problem for T_t^{12} is shown in Figure 7.8. The temperatures $T_t^1(y,0,t)$ and $T_t^2(x,0,t)$ correspond to the temperatures under the insulation for component 1 and 2. We see that the heat conduction problem for T_t^{12} does not correspond to our original problem shown in Figure 7.5. The difference in temperature fields will be denoted by $T_t^c(x,y,z,t)$ (corner).

$$T_t(x,y,z,t) = T_t^{12}(x,y,z,t) + T_t^c(x,y,z,t) \tag{7.14}$$

The temperature field T_t^c gives the error in our edge approximation. The heat conduction problem for the remaining component T_t^c in the superposition is shown in Figure 7.9. The ground surface temperature for $t > 0$ at $x > 0, y < 0, z = 0$ is -1, at $x > 0, y > 0, z = 0$ it is

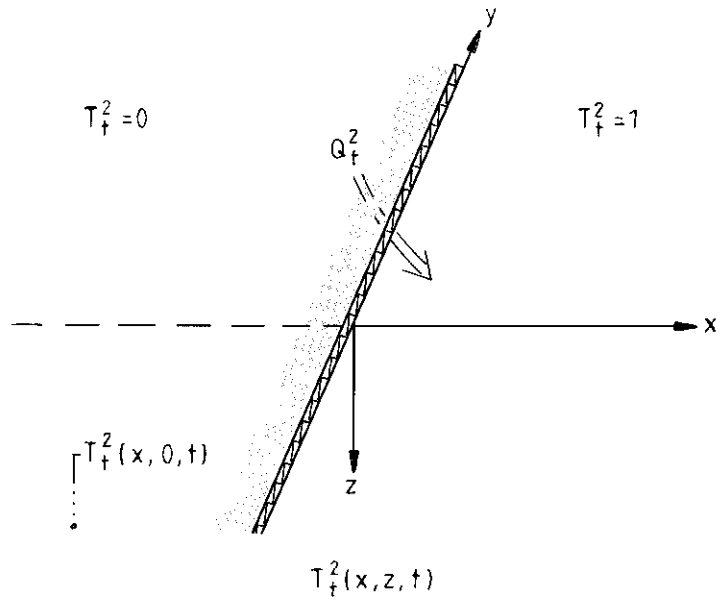

Figure 7.7: Edge approximation of the heat loss due to the two-dimensional temperature field $T_t^2(x, z, t)$.

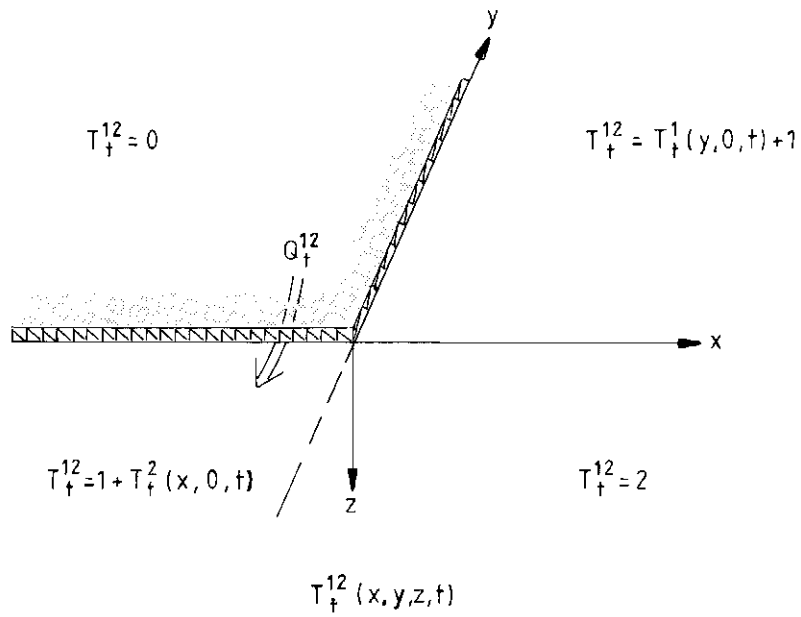

Figure 7.8: Temperature field $T_t^{12}(x, y, z, t)$ obtained by the superposition of the two edge approximations.

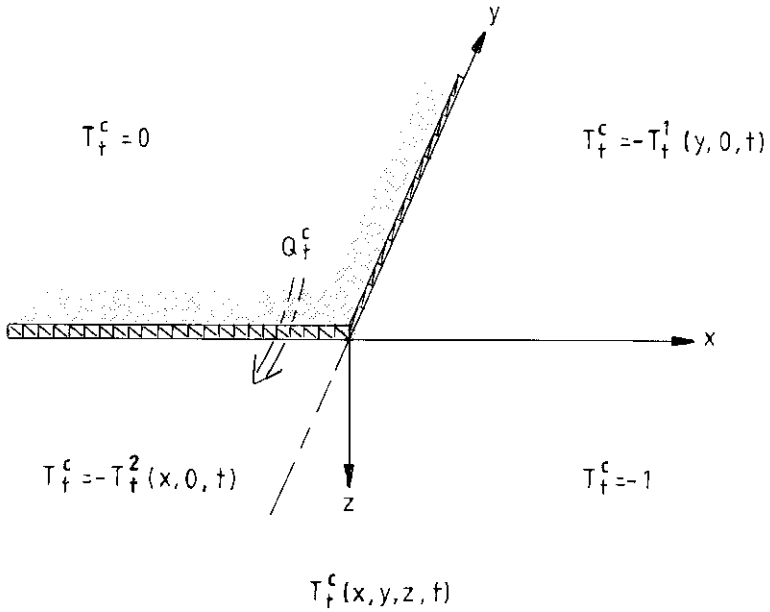

Figure 7.9: Temperature field $T_t^c(x,y,z,t)$ which gives the error in the edge approximation.

$-T_t^1(y,0,t)$, and at $x < 0, y < 0, z = 0$ it is $-T_t^2(x,0,t)$. The ground surface temperatures $-T_t^1(y,0,t)$ and $-T_t^2(x,0,t)$ are zero at $t = 0$. They decrease and spread out in the x or y direction for increasing times. Compare with Figure 6.4. The indoor temperature and the initial ground temperature are zero. Wee see that the ground surface temperature for T^c is negative. The sign of Q_t^c is different from those of q_t^1 and q_t^2. Thus we get:

$$|Q_t| < |Q_t^1 + Q_t^2| \tag{7.15}$$

Thus our edge approximation gives an overestimation of the heat loss for the corner region.

I have not obtained any exact numbers for the error in the edge approximation (7.8-9). This is caused by numerical difficulties in three-dimensional calculations. However this indicates that the maximum error is around 5-10%, which is the expected error in the numerical calculations. The error in the edge approximation is zero at $t = 0$. The maximum error occurs at the end of the validity ($\sqrt{at} = B/2$).