LUND UNIVERSITY

Heat loss to the ground from a building : slab on the ground and cellar

Hagentoft, Carl-Eric

1988

Link to publication

Citation for published version (APA):
Hagentoft, C.-E. (1988). *Heat loss to the ground from a building : slab on the ground and cellar*. [Doctoral Thesis (monograph), Division of Building Physics]. Byggnadsfysik LTH, Lunds Tekniska Högskola.

Total number of authors:
1

General rights
Unless other specific re-use rights are stated the following general rights apply:
Copyright and moral rights for the publications made accessible in the public portal are retained by the authors and/or other copyright owners and it is a condition of accessing publications that users recognise and abide by the legal requirements associated with these rights.
• Users may download and print one copy of any publication from the public portal for the purpose of private study or research.
• You may not further distribute the material or use it for any profit-making activity or commercial gain
• You may freely distribute the URL identifying the publication in the public portal

Read more about Creative commons licenses: https://creativecommons.org/licenses/

Take down policy
If you believe that this document breaches copyright please contact us providing details, and we will remove access to the work immediately and investigate your claim.

LUND UNIVERSITY

PO Box 117
221 00 Lund
+46 46-222 00 00

Part B: SLAB ON THE GROUND

8 STEADY-STATE HEAT LOSS 59

8.1 Heat loss factor for a rectangular slab 59

8.2 Approximation from the theory of optimal insulation 65

8.3 Heat flow along circular arcs 66

8.3.1 Edge of a long slab 67

8.3.2 Long slab of finite width 68

8.4 Two-dimensional case 70

8.4.1 Constant insulation thickness 70

8.4.2 A few cases with edge insulations 70

8.5 Dependence of the shape 75

8.5.1 Heat loss factor for constant area 75

8.5.2 Circular slab 77

8.5.3 Circular versus quadratic shape 77

8.5.4 A few other shapes 77

8.6 Edge effects 81

9 PERIODIC HEAT LOSS 85
9.1 Heat loss factor for an edge . . . 85
9.2 General heat loss formula . . . 91
9.3 A few examples and analyses . . . 94
9.3.1 Variation of the period time t_0 . . . 94
9.3.2 Variation of the thermal properties of the ground . . . 94
9.3.3 Thermal resistance at the ground surface . . . 95

10 STEP CHANGE OF OUTDOOR TEMPERATURE 99
10.1 Heat loss factor for an edge . . . 99
10.1.1 Heat loss factor h_t^0 . . . 99
10.1.2 Accumulated heat loss factor e_t^0 . . . 100
10.1.3 Thermal resistance at the ground surface . . . 102
10.2 Approximate heat loss formula for short and long times . . . 104
10.3 Piece-wise constant outdoor temperature . . . 106
10.3.1 Heat loss formula using the edge approximation . . . 106
10.3.2 Single pulse . . . 107

11 THERMAL BUILD-UP 113
11.1 Heat loss for a rectangular slab . . . 113
11.2 Heat loss for short times . . . 117
11.2.1 One-dimensional approximation . . . 117
11.2.2 Edge heat loss . . . 118

12 VARIABLE INDOOR TEMPERATURE 123
12.1 Periodic indoor temperature . . . 123
12.1.1 One-dimensional approximation . . . 123
12.1.2 Edge heat loss . . . 124
12.2 Step change of the indoor temperature . . . 128

13 DISCUSSION OF SIMPLIFICATIONS 133
13.1 Groundwater . . . 133
13.2 Freezing of the ground . . . 135
13.3 Snow . . . 137
13.4 Stratified ground . . . 140
13.5 Slab with reinforced edges and underlying thermal insulation . . . 142

14 DESIGN RULES 145
14.1 Outdoor temperature . . . 145
14.2 Heat loss during heating season . . . 145
14.3 Peak effect during the winter . . . 146
14.4 Comments . . . 147
14.5 PC-program for the design rules . . . 148

15 EXAMPLES 151
15.1 Total heat loss for the reference cases . . . 151
15.2 Comparison with the Swedish building code . . . 155
15.2.1 Heat loss . . . 155
15.2.2 Steady-state heat loss . . . 155
15.2.3 Accumulated heat loss during heating season . . . 157
15.2.4 Peak effect . . . 158

Part B

SLAB ON THE GROUND

Chapter 8

STEADY-STATE HEAT LOSS

The steady-state heat loss component for a slab on the ground is treated in this chapter. The thermal insulation thickness d_i is constant over the slab.

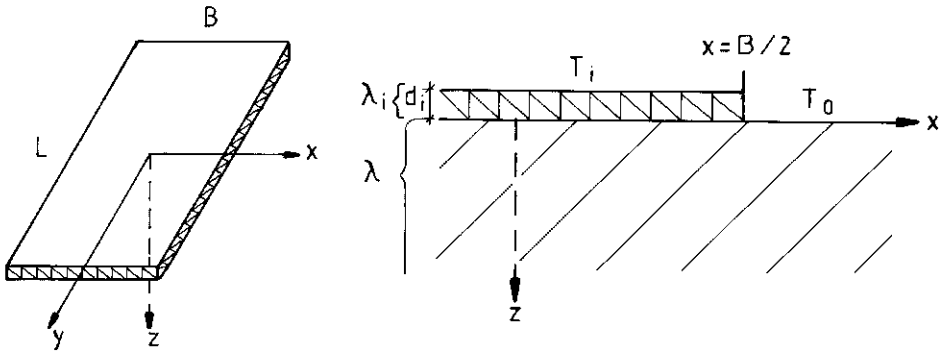

Figure 8.1: Steady-state temperature process for a rectangular slab on the ground.

The thermal problem for the rectangular slab is shown in Figure 8.1 The temperature in the house above the thermal insulation is T_i. The thermal insulation is given by the equivalent insulation thickness d according to Formula 3.16:

$$d = \frac{\lambda d_i}{\lambda_i} \tag{8.1}$$

The thermal conductivity of the ground is λ (W/mK). It is not necessary to know the thermal diffusivity for the steady-state case. The annual average outdoor temperature is T_0. The thermal resistance at the ground surface is given by d_1, (3.19). This thermal resistance is usually neglected, i.e. d_1=0.

The steady-state heat loss is denoted Q_s (W). For two-dimensional cases it is denoted by q_s (W/m).

8.1 HEAT LOSS FACTOR FOR A RECTANGULAR SLAB

Figure 8.1 illustrates the case with a rectangular slab on the ground. The length of the slab is L, and the width is B. The steady-state temperature problem contains four lengths L, B, d and d_1. The heat loss factor h_s then contains three non-dimensional parameters. For the special case d_1=0, the heat loss factor depends only on two parameters. We have:

$$Q_s = \lambda(T_i - T_0)L \cdot h_s(L/B, d/B, d_1/d) \qquad d_1 \neq 0$$

$$Q_s = \lambda(T_i - T_0)L \cdot h_s(L/B, d/B) \qquad d_1 = 0 \tag{8.2}$$

Here we have used the length L of the slab as the multiplicative length factor. Thus Q_s/L will give the heat loss per unit length of the slab. The heat loss factor for a rectangular slab can then be compared with the two-dimensional heat loss factor which also gives the heat loss per unit length.

The heat loss factor h_s has been calculated numerically for a number of parameter values. Figure 8.2 and Table 8.1 gives the result for the case $d_1 = 0$.

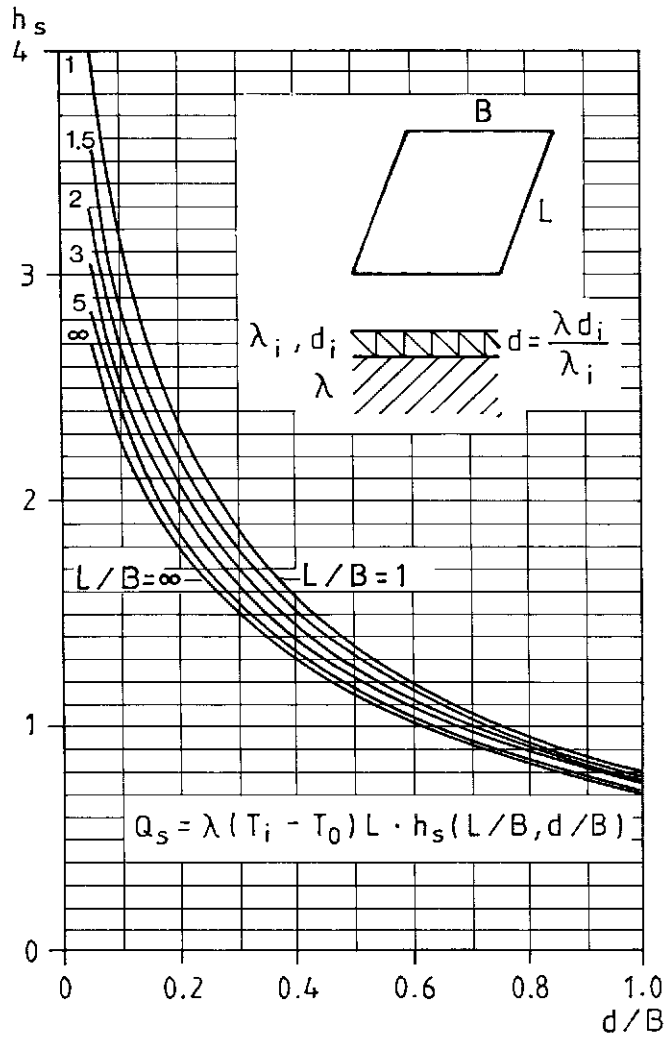

Figure 8.2: Heat loss factor $h_s(L/B, d/B)$, $d_1 = 0$.

The error in the calculated heat loss factors is estimated to about 5% or less for the cases $d/B > 0.15$. For $0.05 < d/B < 0.15$ the estimated error lies in the range 5-10%. Around 13 000 grid points have been used in the calculations.

	L/B =1	1.5	2.0	3	5	∞
d/B =0.05	3.98	3.53	3.30	3.05	2.85	2.71
0.10	3.21	2.89	2.72	2.53	2.40	2.28
0.20	2.37	2.18	2.08	1.97	1.87	1.79
0.50	1.37	1.30	1.26	1.21	1.18	1.16
1.00	0.81	0.78	0.77	0.75	0.73	0.72

Table 8.1: Heat loss factor $h_s(L/B, d/B)$, $d_1 = 0$.

Example 8.1:

Consider reference case A presented in Section 1.7. We have the following data:

$T_i = 20\,°C$ $\quad T_0 = 5\,°C$
L =12 m $\quad B$ = 8 m
$\lambda = 1.5$ W/mK $\quad d_1 = 0$
$\lambda_i = 0.04$ W/mK $\quad d_i$=0.08 m

These data give:

$\lambda(T_i - T_0)L = 1.5 \cdot (20 - 5) \cdot 12 = 270$ W
$d = 0.08 \cdot 1.5/0.04 = 3$ m
$L/B = 1.5 \qquad d/B = 0.375$

Figure 8.2 gives the heat loss factor:

$h_s(1.5, 0.375) \approx 1.58$

The steady-state heat loss becomes:

$Q_s = 270 \cdot 1.58 = 427$ W

The thermal insulation for the reference case B is doubled compared with case A:

$d_i = 0.16$ m $\rightarrow d = 6$ m

This gives:

$h_s(1.5, 6/8) \approx 0.97$
$Q_s = 270 \cdot 0.97 = 262$W

Reference case C concerns a larger slab:

$L = 30$ m $\quad B = 15$ m $\quad d_i = 0.08$ m

We get:

$\lambda(T_i - T_0)L = 675$ W
$d = 3$ m
$h_s(30/15, 3/15) = h_s(2, 0.2) = 2.08$
$Q_s = 675 \cdot 2.08 = 1404$W

Figures 8.3-4 and Table 8.2 give the heat loss for the case $d_1 \neq 0$. The heat loss problem for the case $d = d_1$ is solved analytically in a supplementary report, [4]. The solution (Formula 4.1 in [4]) for this three-dimensional problem has the form of a double integral with infinite integration intervals. The integral is evaluated numerically. The estimated error due to truncation of the integration interval and numerical errors is less than 1 %.

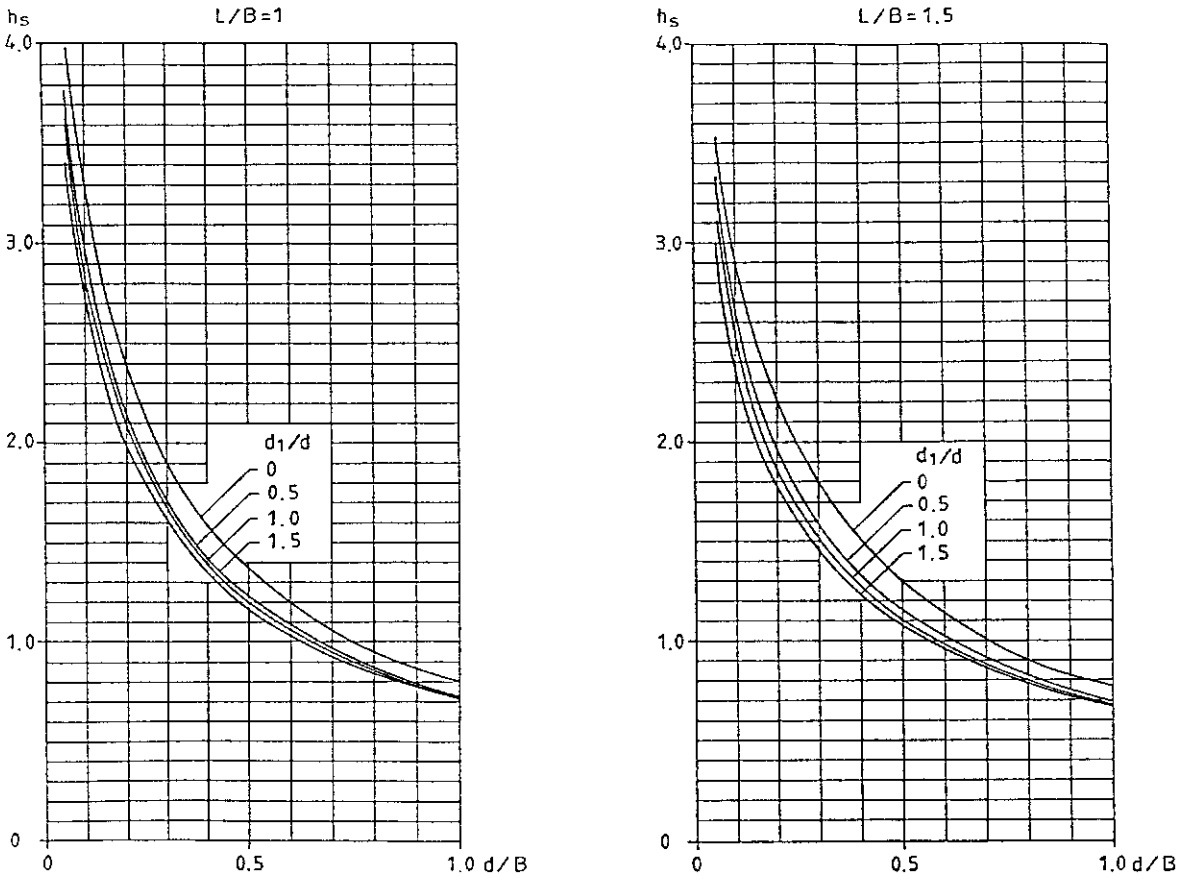

Figure 8.3: Heat loss factor $h_s(L/B, d/B, d_1/d)$ for $L/B = 1$ and 1.5.

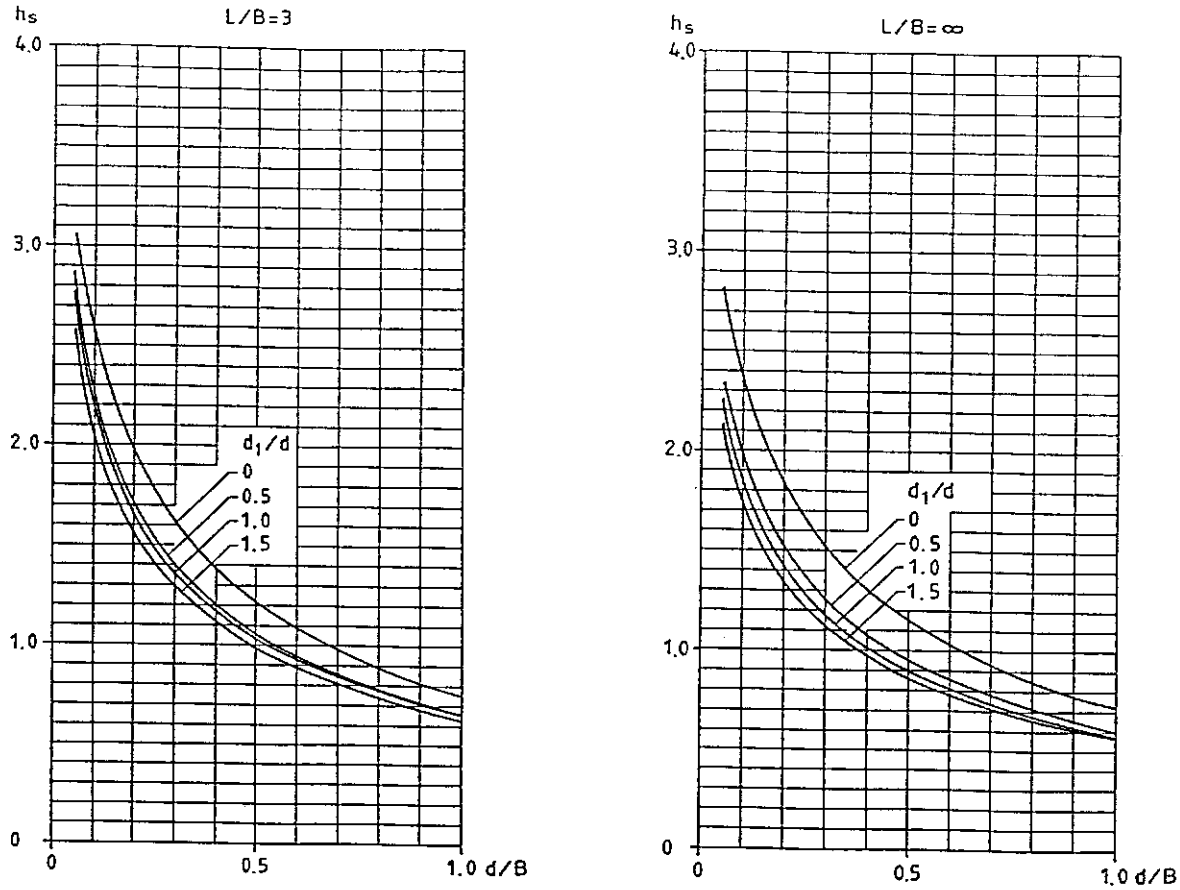

Figure 8.4: Heat loss factor $h_s(L/B, d/B, d_1/d)$ for $L/B = 3$ and ∞.

$L/B = 1$	d_1/d =0.0	0.5	1.0	1.5
d/B =0.05	3.98	3.76	3.63	3.41
0.10	3.21	2.92	2.81	2.65
0.20	2.37	2.12	2.05	1.95
0.50	1.37	1.23	1.20	1.16
1.00	0.81	0.74	0.73	0.72

$L/B = 1.5$	d_1/d =0.0	0.5	1.0	1.5
d/B =0.05	3.53	3.33	3.21	3.01
0.10	2.89	2.62	2.52	2.37
0.20	2.18	1.94	1.87	1.77
0.50	1.30	1.16	1.13	1.08
1.00	0.78	0.71	0.70	0.68

$L/B = 3$	d_1/d =0.0	0.5	1.0	1.5
d/B =0.05	3.05	2.87	2.76	2.58
0.10	2.53	2.29	2.20	2.06
0.20	1.97	1.73	1.66	1.56
0.50	1.21	1.06	1.03	0.98
1.00	0.75	0.67	0.65	0.63

$L/B = \infty$	d_1/d =0.0	0.5	1.0	1.5
d/B =0.05	2.83	2.38	2.28	2.13
0.10	2.33	1.95	1.84	1.73
0.20	1.81	1.51	1.41	1.34
0.50	1.15	0.96	0.90	0.88
1.00	0.72	0.62	0.59	0.57

Table 8.2: Heat loss factor $h_s(L/B, d/B, d_1/d)$.

	L/B =1.0	1.5	3.0	∞
d_1/B =0.05	5.00	4.31	3.59	2.97
0.10	4.44	3.83	3.18	2.50
0.20	3.92	3.38	2.79	2.11
0.50	3.35	2.87	2.34	1.64
1.00	3.01	2.56	2.06	1.31

Table 8.3: Heat loss factor $h_s(L/B, d/B, d_1/B)$, $d = 0$.

Figure 8.5 and Table 8.3 give the heat loss factor for the special case $d = 0$.

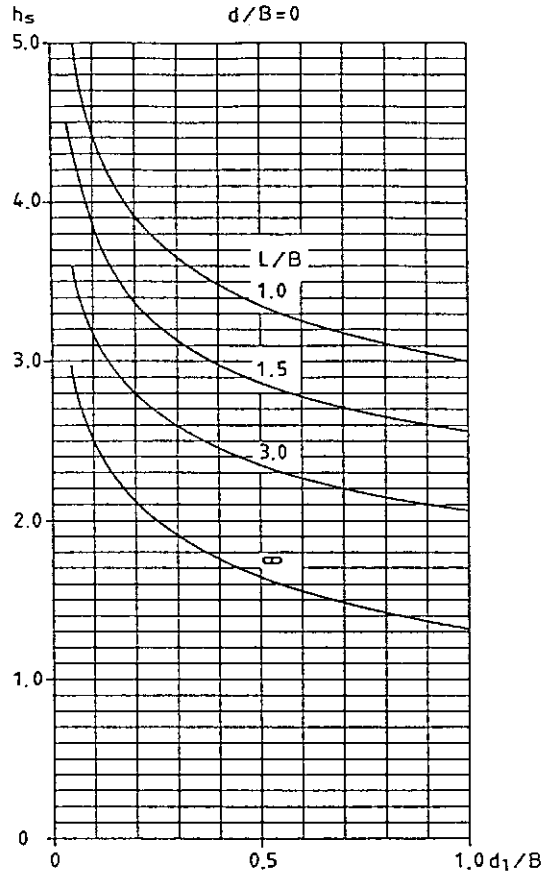

Figure 8.5: Heat loss factor $h_s(L/B, d/B, d_1/d)$ for $d = 0$.

The heat loss Q_s is expressed by the heat loss factor h_s in the formulæ above. Another way to give the heat loss is to represent it by an 'U'-value for insulation and ground. The 'U'-value is defined by:

$$Q_s = \mathrm{U} \cdot (T_i - T_0)A \tag{8.3}$$

Here A is the area of the slab. The relation between U and h_s is obtained by combining (8.2) and (8.3), where $A = LB$ for rectangular slab:

$$\mathrm{U} = \frac{\lambda L h_s}{A} = \frac{\lambda h_s}{B} \tag{8.4}$$

A third way to express the heat loss is to represent the thermal resistance of the ground by an equivalent soil thickness D_m. The heat loss becomes:

$$Q_s = \frac{T_i - T_0}{d_i/\lambda_i + D_m/\lambda} A = \lambda \frac{T_i - T_0}{d + D_m} A \tag{8.5}$$

Here the thermal resistances of the insulation (d_i/λ_i) and of the soil (D_m/λ) are coupled in series. The total thermal resistance is obtained from the sum of these two parts. Combining (8.2) and (8.5) we get the following relation between D_m and h_s:

$$h_s = \frac{A}{L(d + D_m)} \qquad D_m = \frac{A}{L h_s} - d \tag{8.6}$$

For a rectangular slab we get:

$$h_s = \frac{B}{d + D_m} \qquad D_m = \frac{B}{h_s} - d \tag{8.7}$$

The relation between U and D_m is:

$$\mathrm{U} = \frac{\lambda}{d + D_m} \qquad D_m = \frac{\lambda}{\mathrm{U}} - d \tag{8.8}$$

8.2 APPROXIMATION FROM THE THEORY OF OPTIMAL INSULATION

In [14] a theory is developed for optimal thermal insulation, i.e. how a given amount of insulation should be distributed in order to minimize the heat loss. With the help of this theory, approximate formulæ for the heat loss can be given, for which the thermal insulation capability of the ground is separated from the thermal resistance of the insulation. The accuracy of the formulæ is good for thick insulations. The formulæ are not valid for thin insulations, the thermal resistance of which is small compared with that of the ground. From [14] we have the following formula:

$$Q_s \approx \frac{T_i - T_0}{d_i/\lambda_i + L_s u_m/\lambda} \cdot A \tag{8.9}$$

The area of the building facing the ground is denoted A. The scaling length is L_s. The dimensionless parameter u_m *does not depend* on the insulation thickness parameter d/L_s. However, it depends on the other non-dimensional parameters of the problem. The ground is represented by the *equivalent soil thickness* $D_m = L_s \cdot u_m$. See Section 8.1. The thermal resistance $L_s \cdot u_m/\lambda$ for this equivalent soil thickness is added to the thermal resistance of the insulation. Rearrangement of (8.9) gives:

$$Q_s \approx \lambda(T_i - T_0) \cdot \frac{A}{d + L_s \cdot u_m} \tag{8.10}$$

For a rectangular slab, where d/B is not too small, we get from [14] ($L_1/L \rightarrow L/B, L_s = B/2, A = LB$ and $u_m/2 \rightarrow u_m$):

$$Q_s \approx \lambda(T_i - T_0) \cdot \frac{LB}{d + B \cdot u_m} \tag{8.11}$$

This gives the following formula for the heat loss factor:

$$h_s \approx \frac{1}{d/B + u_m} \qquad d/B > 0.3 \tag{8.12}$$

For the case $d_1 = 0$ the parameter u_m depends on L/B only. It is given in Table 8.4.

L/B	1.0	1.5	2.0	3.0	5.0	∞
u_m	0.26	0.30	0.33	0.36	0.39	$\pi/8$

Table 8.4: The parameter u_m of formula (8.12) as a function of L/B, ($d_1 = 0$).

The approximation for h_s according to (8.12) is shown in Figure 8.6 for $L/B = 1$ and 3. The approximation gives an accurate value of h_s for $d/B > 0.3$. The error is less than 7% for $1 \leq L/B \leq \infty$ compared with the numerically calculated values.

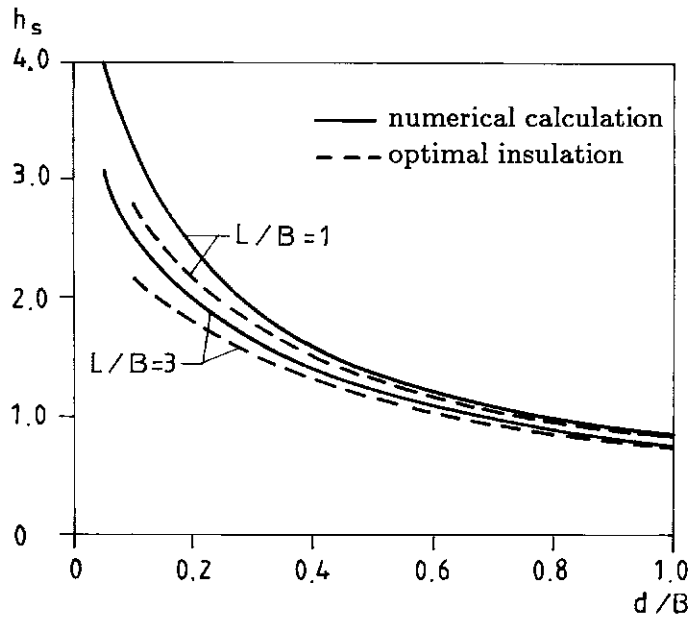

Figure 8.6: Comparison between numerically calculated heat loss factors and the approximation (8.12).

8.3 HEAT FLOW ALONG CIRCULAR ARCS

In many studies the heat flow from the building is assumed to follow circular arcs. This assumption will be analysed in this section. A few approximate formulæ will also be given.

A special heat loss theorem based on Green's formula is derived in [11]. The heat loss through a boundary having an arbitrarily varying temperature is related to the case with

constant surface temperature. The heat loss is known, if we know the temperature under the thermal insulation of the boundary. However, this temperature is usually unknown.

For the two-dimensional case, the heat loss formula may be interpreted as if the heat flow followed circular arcs. With the help of this physical interpretation, approximate formulæ for the heat loss may be given.

In Section 8.3.1 the simplest case with an edge of a slab is treated. In Section 8.3.2 the two-dimensional case with a slab of finite width is treated.

8.3.1 EDGE OF A LONG SLAB

For a long slab ($L/B \gg 1$) the steady-state temperature profile is approximately two-dimensional in the plane perpendicular to the edge line. The heat flow problem in the edge region of the slab is treated in this section. The equivalent insulation thickness d is constant over $0 < x < \infty$, ($z = 0$). The case treated is shown in Figure 8.7.

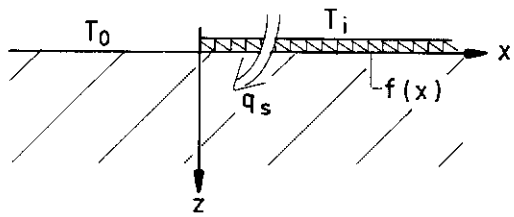

Figure 8.7: Edge region perpendicular to the edge line for a long slab. The unknown temperature under the insulation is denoted by $f(x)$.

The unknown temperature under the insulation is denoted by $f(x), 0 < x < \infty$. The steady-state heat loss q_s over the slab $0 < x < \infty$ is according to [11] given by the following integral:

$$q_s = \int_0^\infty \frac{\lambda(f(x) - T_0)}{\pi x}\, dx \qquad \text{(W/m)} \tag{8.13}$$

This formula is exact. However, the temperature $f(x)$ is not known.

Figure 8.8 gives a physical interpretation of Formula 8.13. Let $q_n(x)$ (W/m^2) denote the heat flow into the ground from the building. Consider the circular arc shown in the figure. For the circular arc with the radius x the length of the heat flow path is πx. The corresponding heat flow then becomes:

$$q_n \approx \frac{\lambda(f(x) - T_0)}{\pi x} \tag{8.14}$$

The total heat loss for the slab is given by the integral of q_n over the slab. Thus an assumption of heat flow along circular arcs gives the exact formula for the heat loss q_s. However, the formula does not give point-wise correct values for q_n.

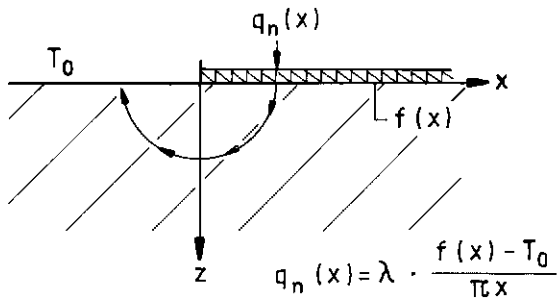

Figure 8.8: Heat flow along circular arcs as a physical interpretation of Formula 8.13.

For the heat flow through the insulation we have the exact formula:

$$q_n(x) = \frac{\lambda_i(T_i - f(x))}{d_i} = \frac{\lambda(T_i - f(x))}{d} \tag{8.15}$$

To obtain an approximation of q_n we combine Formulæ 8.14 and 8.15 and eliminate the unknown temperature $f(x)$. We get:

$$q_n(x) \approx \lambda(T_i - T_0) \cdot \frac{1}{\pi x + d} \tag{8.16}$$

This is a circular-arc approximation of the heat flow through the slab at the edge. We add the length of the arc πx to the equivalent insulation thickness d. Over the total equivalent insulation length $\pi x + d$ we have the temperature difference $(T_i - T_0)$.

The total heat loss over the interval $0 \leq x \leq X$ is denoted by $q_s(X)$. Integration of (8.16) gives:

$$q_s(X) = \int_0^X q_n(x)\,dx \approx \lambda(T_i - T_0)\frac{1}{\pi}\ln(\pi X/d + 1) \tag{8.17}$$

This gives an approximation of the heat loss from the edge to the depth X. It should be noted that the heat loss increases as $\ln(X)$ for increasing X.

The arc approximation may be generalized to the case when the insulation thickness varies with x. Let the equivalent insulation thickness at x be denoted by $d(x)$. A circular-arc approximation is then:

$$q_n(x) \approx \lambda(T_i - T_0) \cdot \frac{1}{\pi x + d(x)} \tag{8.18}$$

For cases with very thin insulations, the temperature $f(x)$ approaches T_i. The description of heat flow paths along arcs will become more and more accurate. We may expect that the circular-arc approximation will be best for thin insulation thicknesses. This is indeed shown in Figure 8.11.

8.3.2 LONG SLAB OF FINITE WIDTH

Figure 8.9 shows the two-dimensional temperature problem for a long slab of width B. The unknown temperature under the insulation is denoted by $f(x), -B/2 < x < B/2$. According to [11] the steady-state heat loss q_s is given by the following integral:

$$q_s = \lambda \int_{-B/2}^{B/2} \left(\frac{1}{\pi(B/2 + x)} + \frac{1}{\pi(B/2 - x)} \right) \cdot (f(x) - T_0)\,dx \qquad \text{(W/m)} \tag{8.19}$$

This formula is exact.

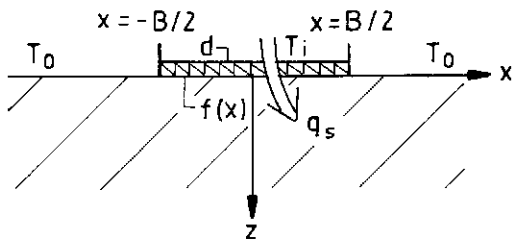

Figure 8.9: Two-dimensional temperature for a slab of width B. The unknown temperature under the insulation is denoted by $f(x)$.

Formula 8.19 may be interpreted in a physical sense as heat flow along *two circular arcs.* This is illustrated in Figure 8.10.

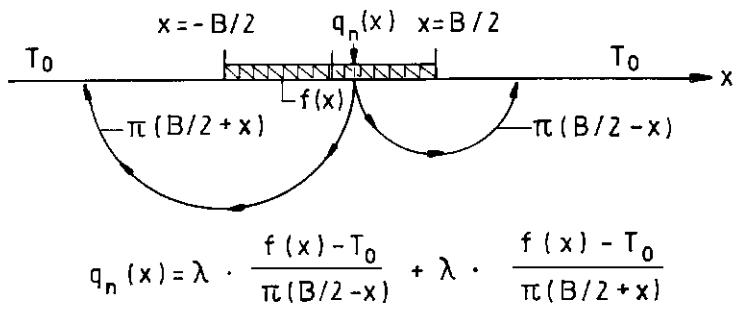

Figure 8.10: Heat flow along two circular arcs. This gives a physical interpretation of (8.19).

The centers of the two arcs lie at the edges of the slab. The length of the arcs become $\pi(B/2 - x)$ and $\pi(B/2 + x)$. The heat flow at x then becomes:

$$q_n(x) \approx \lambda \frac{f(x) - T_0}{\pi(B/2 - x)} + \lambda \frac{f(x) - T_0}{\pi(B/2 + x)} \qquad (\mathrm{W/m^2}) \tag{8.20}$$

This formula does not give point-wise exact values for q_n, but the formula for the integrated heat flow q_s over the slab is exact.

Formula 8.19 is not of any direct use, since the temperature $f(x)$ is unknown. A circular-arc approximation for the heat flow is obtained by adding the equivalent insulation thickness d to the length of the arcs:

$$q_n(x) \approx \lambda(T_i - T_0)\left(\frac{1}{\pi(B/2 - x) + d} + \frac{1}{\pi(B/2 + x) + d}\right) \tag{8.21}$$

This way of adding the equivalent insulation thickness d is not the only way of doing it. An alternative is to use the thermal resistance of the two arcs coupled in parallel and then add the thermal resistance of the thermal insulation. This will however give a more complicated formula for q_s without any improvement of the accuracy.

By integrating q_n, (8.21), over the slab we get the following approximate formula for the heat loss q_s:

$$q_s = \int_{-B/2}^{B/2} q_n(x)\,dx \approx \lambda(T_i - T_0)\frac{2}{\pi}\ln(\pi B/d + 1) \tag{8.22}$$

This gives the following approximation for the heat loss factor:

$$h_s \approx \frac{2}{\pi}\ln(\pi B/d + 1) \qquad (0.01 \leq d/B \leq 0.3) \tag{8.23}$$

A comparison between the numerically calculated heat loss factor and this approximation is made in Figure 8.11. The approximation is good for thin insulation thicknesses. The maximum error is 5% in the given interval.

Analogous formulæ for the three dimensional slab may be derived. However, they do not give any physical understanding of the thermal process, and they are complicated to use as approximations.

8.4 TWO-DIMENSIONAL CASE

For a long slab ($L/B \gg 1$) the temperature is approximately two-dimensional in a plane perpendicular to the y-axis ($-L/2 < y < L/2$) of Figure 8.1.

A semi-analytical calculation method for two-dimensional temperature problems is derived in a supplementary report, [5]. The method, which has very high accuracy, allows for an arbitrarily variable insulation thickness along the ground surface. The method is based on conformal mapping technique and Fourier series expansions. The Fourier coefficients are obtained by the use of an iterative formula with rapid convergency. The method is available as a PC-program, [5].

The semi-analytical method is used in the calculations of the heat losses for the two-dimensional cases below. The error in the calculated heat losses is less than 0.1 %.

8.4.1 CONSTANT INSULATION THICKNESS

Consider a slab with the width B and a constant equivalent insulation thickness d is. From (5.16) we get:

$$q_s = \lambda(T_i - T_0) \cdot h_s(d/B) \tag{8.24}$$

The heat loss factor $h_s(d/B)$ is given in Figure 8.11 and Table 8.5. The approximate formulæ for thin, (8.23), and thick, (8.12) with $u_m = \pi/8$, insulations are also shown in the figure.

8.4.2 A FEW CASES WITH EDGE INSULATIONS

It is interesting to study the effect of an extra insulation at the edges of the slab. Figure 8.12 shows the case where there is an extra insulation of width D at the edges inside the house. The inner part of the slab has the equivalent insulation thickness d, and the edges have the equivalent insulation thickness $d + \tilde{d}$. The heat loss factor depends on three non-dimensional parameters:

$$h_s = h_s(d/B, \tilde{d}/d, D/B) \tag{8.25}$$

The heat loss factor is given i Table 8.6.

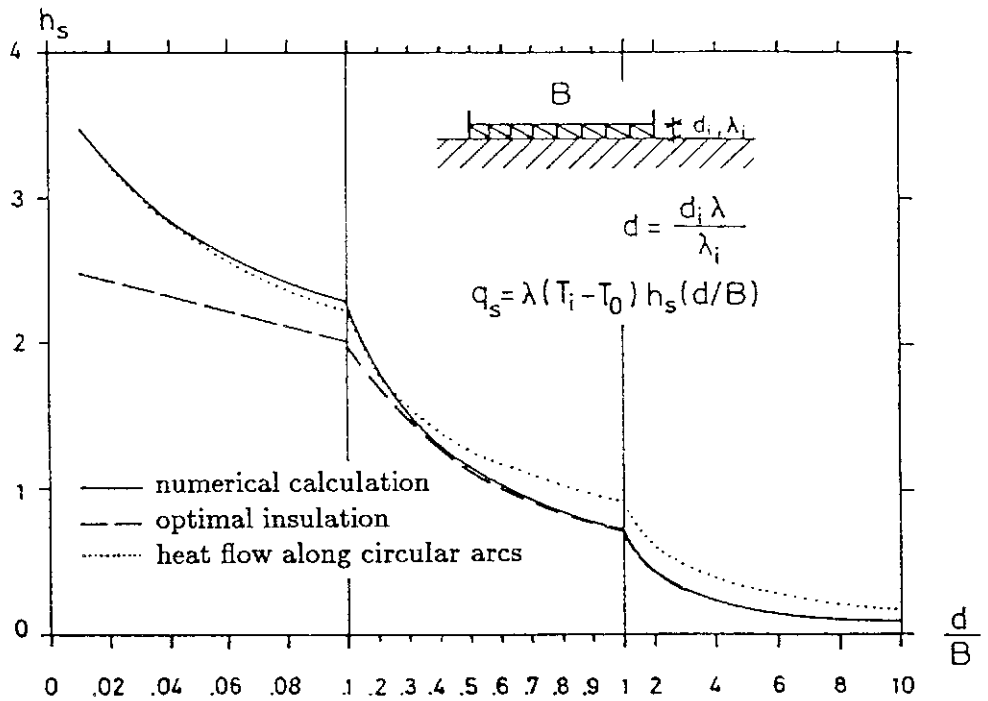

Figure 8.11: Heat loss factor $h_s(d/B)$ for a long slab with constant insulation thickness. The approximation (8.12) is shown as a dashed curve, and the approximation (8.23) is shown as a dotted curve.

d/B	h_s	d/B	h_s
0.05	2.827	0.55	1.083
0.10	2.330	0.60	1.026
0.15	2.030	0.65	0.974
0.20	1.814	0.70	0.928
0.25	1.647	0.75	0.886
0.30	1.511	0.80	0.848
0.35	1.398	0.85	0.813
0.40	1.302	0.90	0.781
0.45	1.219	0.95	0.751
0.50	1.147	1.00	0.724

Table 8.5: Heat loss factor $h_s(d/B)$ for a long slab with constant insulation thickness.

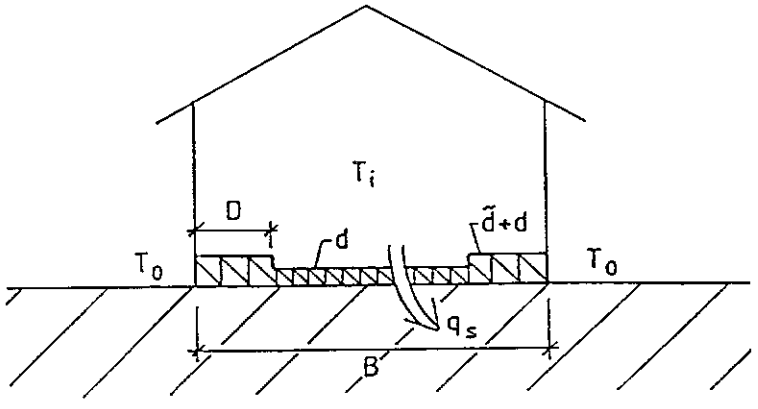

Figure 8.12: Extra insulation at the edges inside the house.

d/B=0.2			d/B=0.4			d/B=0.6		
D/B	$\tilde{d}/d$	h_s	D/B	$\tilde{d}/d$	h_s	D/B	$\tilde{d}/d$	h_s
0.05	-0.5	2.033	0.05	-0.5	1.450	0.05	-0.5	1.138
0.05	0.5	1.730	0.05	0.5	1.249	0.05	0.5	0.986
0.05	1.0	1.685	0.05	1.0	1.221	0.05	1.0	0.965
0.05	1.5	1.657	0.05	1.5	1.204	0.05	1.5	0.953
0.05	2.0	1.638	0.05	2.0	1.193	0.05	2.0	0.945
0.10	-0.5	2.125	0.10	-0.5	1.537	0.10	-0.5	1.215
0.10	0.5	1.683	0.10	0.5	1.211	0.10	0.5	0.955
0.10	1.0	1.610	0.10	1.0	1.163	0.10	1.0	0.919
0.10	1.5	1.564	0.10	1.5	1.133	0.10	1.5	0.896
0.10	2.0	1.532	0.10	2.0	1.113	0.10	2.0	0.881
0.20	-0.5	2.218	0.20	-0.5	1.647	0.20	-0.5	1.323
0.20	0.5	1.623	0.20	0.5	1.155	0.20	0.5	0.905
0.20	1.0	1.509	0.20	1.0	1.072	0.20	1.0	0.846
0.20	1.5	1.454	0.20	1.5	1.020	0.20	1.5	0.799
0.20	2.0	1.381	0.20	2.0	0.984	0.20	2.0	0.771
0.30	-0.5	2.269	0.30	-0.5	1.719	0.30	-0.5	1.401
0.30	0.5	1.581	0.30	0.5	1.109	0.30	0.5	0.863
0.30	1.0	1.436	0.30	1.0	0.997	0.30	1.0	0.771
0.30	0.5	1.337	0.30	1.5	0.924	0.30	1.5	0.712
0.30	2.0	1.265	0.30	2.0	0.872	0.30	2.0	0.671

Table 8.6: Heat loss factor $h_s(d/B, \tilde{d}/d, D/B)$ for a ground slab with extra insulation at the edges inside the house.

Example 8.2:

Consider a long slab of width 10 m. We assume the following data for the slab:

$d = 2$ m $\quad B = 10$ m
$\tilde{d} = 0$ m $\quad L/B \gg 1$

The heat loss factor for this case is from Table 8.5:

$h_s = 1.814$

If we double the inside edge insulation thickness, i.e. $\tilde{d} = d$, over the width D, we obtain the following heat loss factors from Table 8.6:

D (m)	0	0.5	1	2	3	5
h_s	1.814	1.685	1.610	1.509	1.436	1.302
Reduction (%)	0	7	11	17	21	28

$\tilde{d}$ =2 m

Here the reduction refers to the heat loss for $\tilde{d} = 0$ and the actual case with extra insulation. The last heat loss factor in the table was obtained from Table 8.5 with d/B=0.4. We see that the maximum reduction of the heat loss for doubled insulation thickness is 28 %.

It is also interesting to study the effect of increasing insulation thickness. Consider the case $D = 1$ m and varying $\tilde{d}$. We obtain from Table 8.6:

$\tilde{d}$ (m)	-1	0	1	2	3	4
h_s	2.125	1.814	1.683	1.610	1.564	1.532
Reduction (%)	-17	0	7	11	14	16

D =1 m

The case $\tilde{d}$=-1 m means that the total equivalent insulation thickness $d + \tilde{d}$ at the edges is reduced to 1 m. The maximum reduction in heat loss is 16% for $\tilde{d} = 4$ m. We see that the reduction of the heat loss due to a increase of $\tilde{d}$ from 3 to 4 meter is marginal.

The extra insulation may be placed at the edges outside the house as shown in Figure 8.13. The inner part of the slab has the equivalent insulation thickness d, and the edges have the equivalent insulation thickness $\tilde{d}$. The heat loss factor depends on three non-dimensional parameters as in (8.25). It is given i Table 8.7.

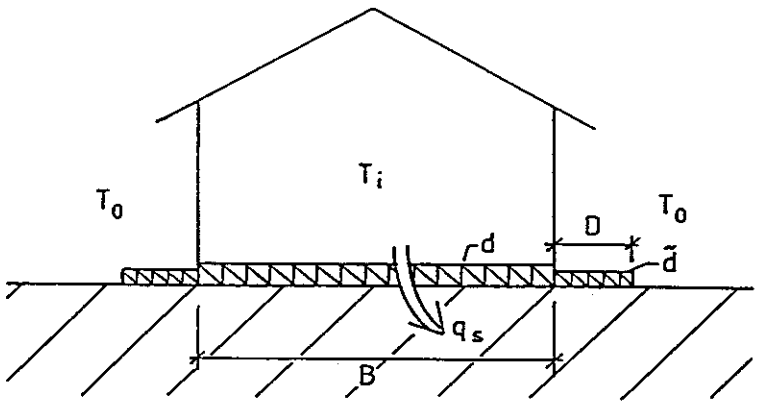

Figure 8.13: Extra insulation at the edges outside the house.

d/B=0.2			d/B=0.4			d/B=0.6		
D/B	$\tilde{d}/d$	h_s	D/B	$\tilde{d}/d$	h_s	D/B	$\tilde{d}/d$	h_s
0.05	0.5	1.651	0.05	0.5	1.214	0.05	0.5	0.970
0.05	1.0	1.633	0.05	1.0	1.209	0.05	1.0	0.968
0.05	1.5	1.626	0.05	1.5	1.207	0.05	1.5	0.967
0.05	2.0	1.622	0.05	2.0	1.206	0.05	1.0	0.966
0.10	0.5	1.596	0.10	0.5	1.174	0.10	0.5	0.941
0.10	1.0	1.558	0.10	1.0	1.160	0.10	1.0	0.934
0.10	1.5	1.541	0.10	1.5	1.154	0.10	1.5	0.932
0.10	2.0	1.532	0.10	2.0	1.151	0.10	2.0	0.930
0.20	0.5	1.553	0.20	0.5	1.135	0.20	0.5	0.910
0.20	1.0	1.488	0.20	1.0	1.105	0.20	1.0	0.894
0.20	1.5	1.456	0.20	1.5	1.093	0.20	1.5	0.888
0.20	2.0	1.436	0.20	2.0	1.086	0.20	2.0	0.884
0.30	0.5	1.536	0.30	0.5	1.116	0.30	0.5	0.893
0.30	1.0	1.456	0.30	1.0	1.076	0.30	1.0	0.870
0.30	1.5	1.413	0.30	1.5	1.057	0.30	1.5	0.866
0.30	2.0	1.387	0.30	2.0	1.046	0.30	2.0	0.854
0.50	0.5	1.522	0.50	0.5	1.100	0.50	0.5	0.877
0.50	1.0	1.428	0.50	1.0	1.046	0.50	1.0	0.844
0.50	1.5	1.374	0.50	1.5	1.019	0.50	1.5	0.828
0.50	2.0	1.338	0.50	2.0	1.001	0.50	2.0	0.818

Table 8.7: Heat loss factor $h_s(d/B, \tilde{d}/d, D/B)$ for a ground slab with extra insulation outside the house.

Example 8.3:

Consider a long slab of width 10 m. We assume the following data for the slab:

$d = 2$ m $\quad B = 10$ m
$\tilde{d} = 0$ m $\quad L/B \gg 1$

The heat loss factor for this case is given in Table 8.5:

$h_s = 1.814$

If we put an outside edge insulation of thickness $\tilde{d} = d$ over the width D (m) we obtain the following heat loss factors from Table 8.7:

D (m)	0	0.5	1	2	3	5	∞	
h_s	1.814	1.633	1.558	1.488	1.456	1.428	1.41	$\tilde{d}$ =2 m
Reduction (%)	0	10	14	18	20	21	22	

The last heat loss factor in the table was obtained from Table 8.2 with $d/B = 0.2, d_1 = d$. We see that the maximum reduction of the heat loss due to the ground surface insulation is 22 %.

It is also interesting to study the effect of increasing insulation thickness. Consider the case $D = 1$ m and varying $\tilde{d}$. We get from Table 8.7:

$\tilde{d}$ (m)	0	1	2	3	4	
h_s	1.814	1.596	1.558	1.541	1.532	$D = 1$m
Reduction (%)	0	12	14	15	16	

The maximum reduction in heat loss becomes 16% for the cases given in the table.

From the examples 8.2-3 we see that the best way to place an extra insulation of the slab varies depending on the width of the extra insulation. For small widths it is better to put the insulation outside the house, while for larger widths it is best to put it inside the house.

We can also see from the examples that we only get marginal reductions in the heat loss if the insulation thickness of an already well insulated edge is increased.

There is of course an optimal way of distributing the thermal insulation. If the extra insulation is placed in the same way as shown in Figures 8.12-13 the optimal distribution can be found with the help of Tables 8.6-7. The general theory of optimal insulation distribution is treated in [14] and [15].

8.5 DEPENDENCE OF THE SHAPE

The heat loss for the rectangular slab has been treated in the previous sections. These results will be used here in order to obtain approximate formulæ for slabs with other shapes.

8.5.1 HEAT LOSS FACTOR FOR CONSTANT AREA

The shape and size of the slab, and the thickness of the thermal insulation, determine the heat loss. A long slab gives a larger heat loss than a quadratic one with the same area. The difference in heat loss for rectangular slabs with constant area will be studied in this section.

Figure 8.14 shows a rectangular and a quadratic slab on the ground with the same area. Both slabs have the equivalent insulation thickness d. The heat loss for the rectangular slab is denoted Q_s and for the quadratic Q_s^q.

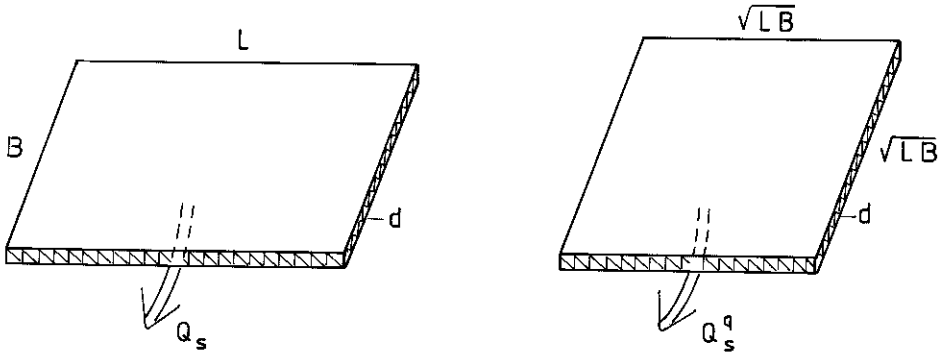

Figure 8.14: Heat loss for a rectangular and a quadratic slab with the same area.

The heat loss is given by (8.2). In the comparison, the ratio of the heat losses are studied. We have:

$$\frac{Q_s}{Q_s^q} = \sqrt{L/B} \cdot \frac{h_s(L/B, d/B)}{h_s(1, d/\sqrt{LB})} \tag{8.26}$$

This ratio is given in Table 8.8 for some values of L/B and d/B. The values for the heat loss factors are obtained from Figure 8.2.

L/B	d/B	Q_s/Q_s^q	L/B	d/B	Q_s/Q_s^q
1	all	1	2.0	0.2	1.06
1.5	0.1	1.03	2.0	0.5	1.05
1.5	0.2	1.03	2.0	1.0	1.04
1.5	0.5	1.02	3.0	0.1	1.14
1.5	1.0	1.02	3.0	0.2	1.14
2.0	0.1	1.06	3.0	0.5	1.09

Table 8.8: The ratio Q_s/Q_s^q as a function of L/B and d/B.

The table shows that the heat loss is rather insensitive to moderate variations of the shape of the slab. The heat loss increases by 5%, when L/B is changed from 1 to 2. The difference in heat loss increases for decreasing insulation thickness.

The heat loss is in general rather insensitive to moderate changes of shape. This gives an approximate heat loss formula. Consider any slab with the area A and the equivalent insulation thickness d. Using the heat loss formula for a quadratic slab we get the following approximate formula:

$$Q_s \approx \lambda(T_i - T_0)\sqrt{A} \cdot h_s(1, d/\sqrt{A}) \tag{8.27}$$

The heat loss factor is obtained from the curve $L/B = 1$ in Figure 8.2.

8.5.2 CIRCULAR SLAB

Figure 8.15 shows a circular slab on the ground with radius R. The equivalent insulation thickness is d. The temperature above the slab is T_i and the temperature at the ground surface outside the slab is T_0.

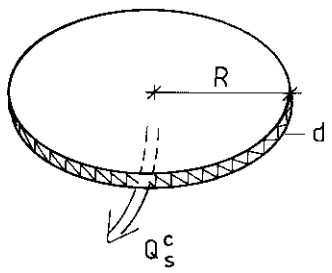

Figure 8.15: Heat loss from a circular slab on the ground

There are two length parameters in the problem: R and d. With our rules of scaling we get the following heat loss formula:

$$Q_s^c = \lambda(T_i - T_0)R \cdot h_s^c(d/R) \tag{8.28}$$

The heat loss factor $h_s^c(d/R)$ has been calculated numerically, and it is given in Figure 8.16.

In [14] an approximate formula for Q_s^c is given ($\pi R^2 \cdot q_1 \rightarrow Q_s^c$). This approximation is valid for slabs with thick insulations. The approximation gives the following heat loss factor:

$$h_s^c \approx \frac{\pi}{d/R + 4/(3\pi)} \tag{8.29}$$

This approximation is shown in Figure 8.16 by the dashed curve. For $d/R > 0.6$ the error in this approximation is less than 3% compared with the numerically calculated heat loss factors.

8.5.3 CIRCULAR VERSUS QUADRATIC SHAPE

In Section 8.5.1 the influence of the heat loss due to the shape of the slab was studied. The comparison was made between a quadratic and a rectangular slab. In this section a quadratic and a circular slab will be compared. Figure 8.17 shows a quadratic and a circular slab with the same area. The equivalent insulation thickness is d for both cases. The heat losses are denoted Q_s^q and Q_s^c.

The heat loss for the circular slab is given in Section 8.5.2 and for the quadratic one in Section 8.1. The ratio between the heat losses is from (8.2) and (8.28):

$$\frac{Q_s^q}{Q_s^c} = \sqrt{\pi} \cdot \frac{h_s^q(1, d/B)}{h_s^c(\sqrt{\pi} \cdot d/B)} \tag{8.30}$$

For $d/B > 0.12$ the ratio is at most 1.02. Thus the heat loss from a quadratic and a circular slab is approximately the same.

8.5.4 A FEW OTHER SHAPES

The heat loss from a *L-shaped slab* with the size shown in Figure 8.18 has been calculated numerically for some values of the parameter d. The values of $Q_s/(\lambda(T_i - T_0))$ are given in Table 8.9.

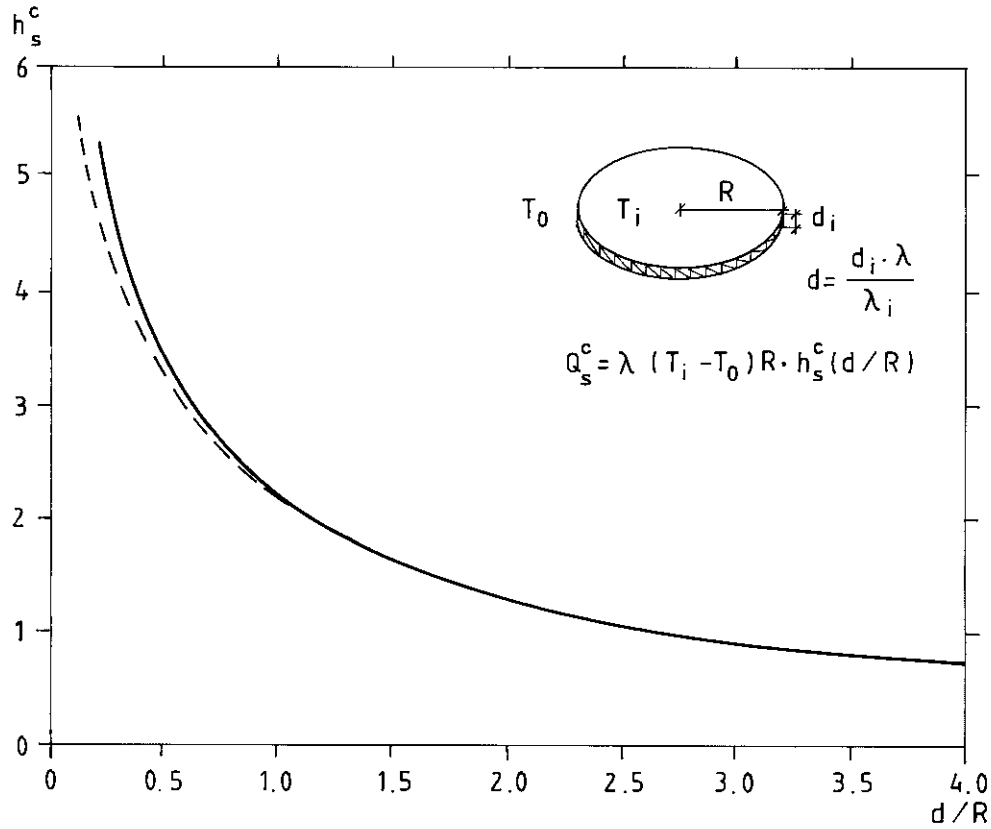

Figure 8.16: Heat loss factor h_s^c for a circular slab. The dashed curve shows the approximation (8.29).

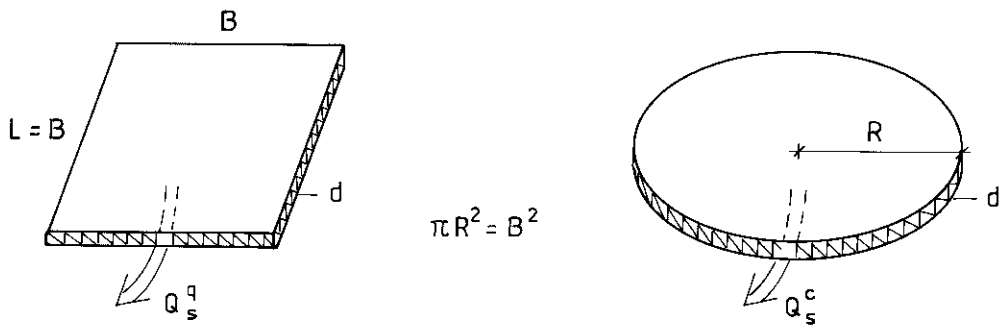

Figure 8.17: Heat loss for a quadratic and a circular slab with the same area.

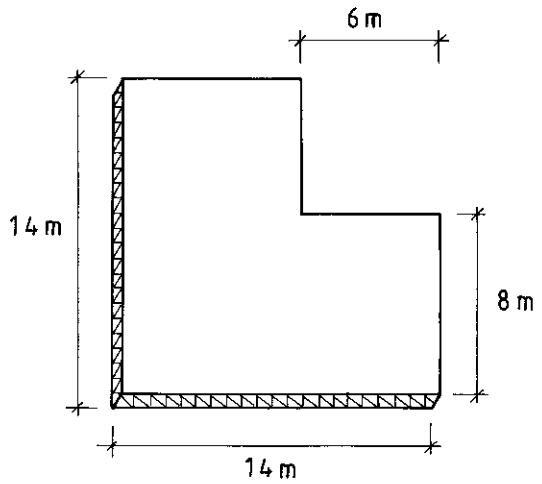

Figure 8.18: L-shaped slab.

In Section 8.5.1 it was shown that the area of the slab is of great importance for the heat loss. Two slabs with the same area and insulation thickness have approximately the same heat loss. This will be used in the approximations for the L-shaped slab below.

Figure 8.19 shows two suitably chosen rectangular and quadratic slabs. The rectangular slab has the width 8 m and the length 14+6 m. Both slabs have the same area as the L-shaped slab shown in Figure 8.18.

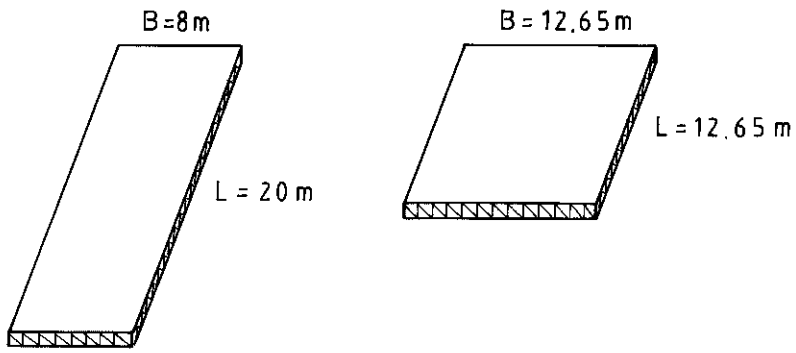

Figure 8.19: Rectangular and quadratic slab used for approximation of the heat loss for the L-shaped slab in Figure 8.18.

The heat loss is calculated according to Formula 8.2 and Figure 8.2. The results for the rectangular and quadratic slab approximations are given in Table 8.9 together with the numerically calculated heat loss for the L-shaped slab.

The rectangular and quadratic slabs give good approximations for the heat loss. The error compared with the numerically calculated values is less than 10% for the studied cases. A quadratic slab gives, as expected, too low heat loss. The rectangular slab overestimates the heat loss. An improved approximation of the heat loss for an L-shaped slab is obtained from the average value of the heat loss for the quadratic and the rectangular slab. The rectangular

$Q_s/(\lambda(T_i - T_0))$ (m)

d (m)	Numerical	Rectangular	Quadratic	Average
1.0	46.3	48.0	43.6	45.8
2.0	34.8	37.0	33.5	35.2
3.0	28.2	29.0	27.3	28.1
4.0	23.8	24.6	23.4	24.0
5.0	20.7	21.4	20.6	21.0

Table 8.9: Numerically calculated heat loss $Q_s/(\lambda(T_i - T_0))$ for the L-shaped slab, and the heat loss from the approximations of Figure 8.19, and the average of these two.

and quadratic slabs are chosen in accordance with Figure 8.19. This heat loss approximation gives an error of less than 2% for the given example.

The heat loss for a ***house with a courtyard*** of the type shown in Figure 8.20 has been calculated numerically for different insulation thicknesses. The results are given in Table 8.10.

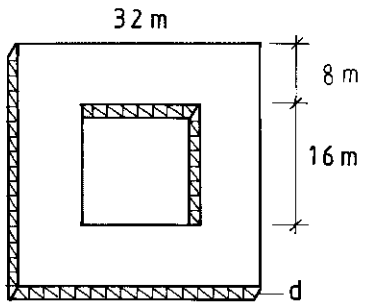

Figure 8.20: House with a courtyard.

An approximation of the heat loss may be obtained from a long slab of width 8 m and the length 32+32+16+16=96 m. The approximation of the heat loss is given in Table 8.10. The heat loss has been calculated with the use of the two-dimensional heat loss q_s (W/m) multiplied by the length 96 meter. The approximation gives a maximum error of 6% compared with the numerically calculated values in the given range for d.

The heat loss for the *U-shaped slab* shown in Figure 8.21 has been calculated numerically for the case $d = 2$ m. The value obtained for $Q_s/(\lambda(T_i - T_0))$ is 167.3 m. A good approximation is obtained from two quadratic slabs (20·20 m^2) and a long slab with width 4 m and length 40 m. With Formula (8.2) and Figure 8.2 we get:

$$\frac{Q_s}{\lambda(T_i - T_0)} \approx 2 \cdot 20 \cdot h_s(20/20, 2/20) + 40 \cdot h_s(2/4) =$$

$$= 2 \cdot 20 \cdot 3.21 + 40 \cdot 1.16 = 174.8 \text{ m} \tag{8.31}$$

The error in the approximation is about 4 %

$Q_s/(\lambda(T_i - T_0))$ (m)

d (m)	Numerical	Long slab
1.0	189.4	201.6
2.0	146.7	153.6
3.0	121.5	126.0
4.0	104.2	108.0
5.0	91.4	92.2

Table 8.10: The heat loss $Q_s/(\lambda(T_i - T_0))$ for the house with a courtyard and for the approximation by the long slab $L = 96$ m, B=8 m.

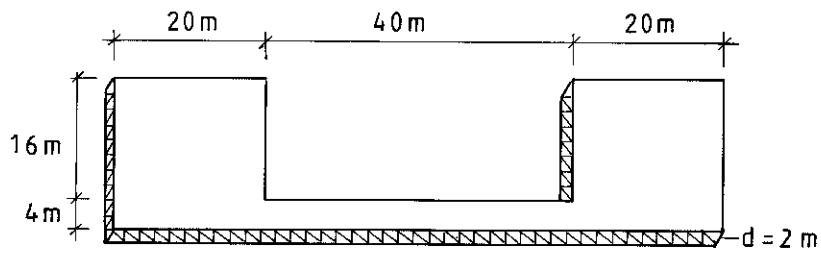

Figure 8.21: U-shaped slab.

8.6 EDGE EFFECTS

The heat loss formulæ presented in this chapter presuppose that the insulation thickness of the slab is constant. Heat loss factors for slabs with extra edge insulation are however presented for the two-dimensional case in Section 8.4. These results give us an idea of the effect of an edge insulation. The Examples 8.2-3 showed that the maximum reduction in heat loss due to doubled insulation thickness was 28 % for an inside edge insulation. For an edge insulation outside the house with the same thickness as the slab insulation the maximum reduction was 16 %. The equivalent insulation thickness of the slab for these examples was 2 m, which corresponds to 8 cm mineral wool and a thermal conductivity of the ground equal to 1.0 W/mK. For thicker insulation thicknesses the reduction becomes smaller, and for thinner insulation thicknesses it becomes larger.

Figure 8.22 shows a rectangular house with an extra edge insulation. The equivalent insulation thickness at the edges is $d+\tilde{d}$, and it has the width D. The heat loss to the ground is denoted by $\tilde{Q}_s$ (W).

The heat loss for a rectangular slab with an extra edge insulation inside the house has been calculated numerically. We have the following data:

$$\begin{array}{lll} L = 12 \text{ m} & B = 12 \text{ m} & D = 1.2 \text{ m} \\ d = 1 \text{ m} & \tilde{d} = 1 \text{ m} & d_1 = 0 \end{array} \tag{8.32}$$

We get the following non-dimensional parameters:

$$L/B = 1 \qquad d/B = 1/12 \qquad D/B = 0.1 \qquad \tilde{d}/d = 1 \tag{8.33}$$

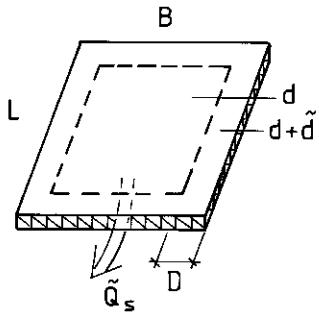

Figure 8.22: Rectangular slab with an extra edge insulation.

The numerically calculated heat loss factor becomes:

$$\frac{\tilde{Q}_s}{\lambda(T_i - T_0)L} = 2.96 \tag{8.34}$$

The heat loss factor for a rectangular slab with constant insulation thickness is obtained from Figure 8.2:

$$\frac{Q_s}{\lambda(T_i - T_0)L} = h_s(1, 1/12) \approx 3.46 \qquad \tilde{d} = 0 \tag{8.35}$$

The reduction in the heat loss due to the extra edge insulation is 17 %. This is also the error in an approximation of the heat loss, which neglects the extra edge insulation.

Figure 8.23 left shows the two-dimensional case for a building which has an extra edge insulation. The width of the building is B. The equivalent insulation thickness at the edges is $d + \tilde{d}$, and it has the width D. The heat loss to the ground is denoted by $\tilde{q}_s^B$ (W/m). Figure 8.23 right shows the slab without extra edge insulations.

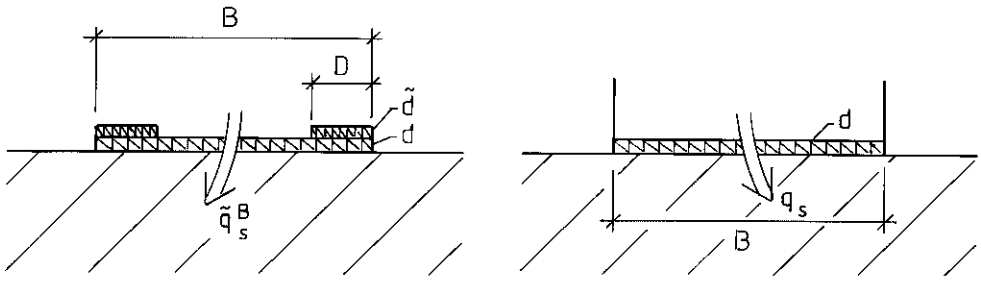

Figure 8.23: Two-dimensional case with an extra edge insulation.

We will now introduce correction terms to account for the heat loss factor for a rectangular slab with an edge insulation. We define:

$$\tilde{h}_s^B = \frac{\tilde{q}_s^B - q_s}{\lambda(T_i - T_0)} \tag{8.36}$$

We also have the corresponding case with B replaced by L:

$$\tilde{h}_s^L = \frac{\tilde{q}_s^L - q_s}{\lambda(T_i - T_0)} \tag{8.37}$$

Here $\tilde{h}_s^B$ and $\tilde{h}_s^L$ give the effect due to the extra edge insulation per meter slab with the width B and L respectively. The heat loss factor can be expressed with heat loss factors from Section 8.4:

$$\tilde{h}_s^B = h_s(d/B, \tilde{d}/d, D/B) - h_s(d/B) \tag{8.38}$$

$$\tilde{h}_s^L = h_s(d/L, \tilde{d}/d, D/L) - h_s(d/L) \tag{8.39}$$

The heat loss factors $h_s(d/B)$ and $h_s(d/L)$ are given by Figure 8.11. The heat loss factors $h_s(d/B, \tilde{d}/d, D/B)$ and $h_s(d/L, \tilde{d}/d, D/L)$ are given by Tables 8.6-7, or by the PC-program, [5]. The approximate heat loss formula for a ***rectangular slab with extra edge insulation*** becomes:

$$\tilde{Q}_s \approx \lambda(T_i - T_0)(L \cdot h_s(L/B, d/B) + L \cdot \tilde{h}_s^B + B \cdot \tilde{h}_s^L) \tag{8.40}$$

The heat loss factor $h_s(L/B, d/B)$ for a rectangular slab with constant insulation thickness is obtained from Figure 8.2. Let us test Formula (8.40) on the example according to (8.32). With (8.38) and [5] we get:

$$\tilde{h}_s^B = h_s(1/12, 1, 0.1) - h_s(1/12) = 2.168 - 2.464 = -0.296 \tag{8.41}$$

The heat loss factor $\tilde{h}_s^L$ is also -0.296, since the house is quadratic. With (8.35) the approximation (8.40) for $\tilde{Q}_s$ becomes:

$$\frac{\tilde{Q}_s}{\lambda(T_i - T_0)L} = 3.46 + 2 \cdot (-0.296) = 2.86 \tag{8.42}$$

The numerically calculated value was 2.96, (8.34). The error in the approximation is only 3%. This should be compared with the error 17 % obtained if the extra edge insulation is neglected.

The approximate formula (8.40) is applicable as long as the width of the extra insulation is much smaller than the width and the length of the slab.

In this section we have treated the case shown in Figure 8.22. Other types of edge insulations, for instance vertical extra insulations, can be treated in a similar way. However, the correction terms $\tilde{h}_s^B$ and $\tilde{h}_s^L$ cannot be obtained from the results in this report. Additional two-dimensional heat loss calculations must be done.

Chapter 9

PERIODIC HEAT LOSS

The periodic heat loss component for the slab on the ground is treated in this chapter. The periodic process is defined by Figure 4.3. The temperature varies periodically at the ground surface with the time period t_0 and the amplitude T_1. The temperature in the building is zero.

9.1 HEAT LOSS FACTOR FOR AN EDGE

Figure 9.1 shows the fundamental periodic heat conduction problem at the edge of a slab. The temperature is two-dimensional in a vertical plane perpendicular to the edge line. The equivalent insulation thickness of the slab is d. The insulation extends from $x = 0$ to $x = \infty$. At the ground surface we have a complex-valued periodic outdoor temperature. The thermal resistance at ground surface is zero ($d_1 = 0$).

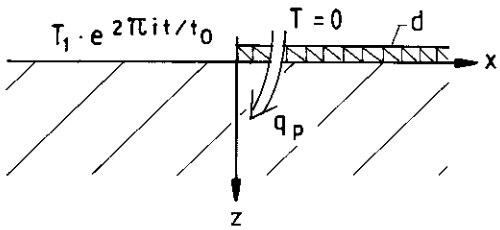

Figure 9.1: Fundamental periodic heat conduction problem at the edge of a slab.

The heat loss q_p (W/m) is given by a formula of the type (5.21). The edge problem contains only two lengths d and d_0. The heat loss factor will depend on one parameter d/d_0:

$$q_p(t) = \Re/\Im\left\{-\lambda T_1 \cdot h_p^0(d/d_0) \cdot e^{2\pi i t/t_0}\right\} \tag{9.1}$$

Here h_p^0 is the *basic periodic heat loss factor* for the edge of a slab. Choosing the imaginary part, with a sinusoidal temperature at the ground surface, we get:

$$q_p(t) = -\lambda T_1 \cdot |h_p^0| \cdot \sin(2\pi(t/t_0 - \phi_p^0)) \qquad \phi_p^0 = -\frac{1}{2\pi}\arg(h_p) \tag{9.2}$$

An analytical solution for the ground temperature has been derived by using Wiener-Hopf technique. The solution and the technique, which are quite complicated, are presented in detail in the supplementary report [1]. However, the formula for the heat loss factor h_p^0 becomes relatively simple. From Formula 3.3.15 in [1] we have:

$$h_p^0(d/d_0) = \frac{1}{2\pi r} \ln\left(\frac{1+r}{1-r}\right)$$

$$r = \sqrt{1 - 2id^2/d_0^2} \tag{9.3}$$

The variable r is given by the square root of a complex number. The heat loss factor h_p^0 is a complex-valued function of the real variable d/d_0. It is shown in the complex plane in Figure 9.2. For every value of d/d_0 we get a point.

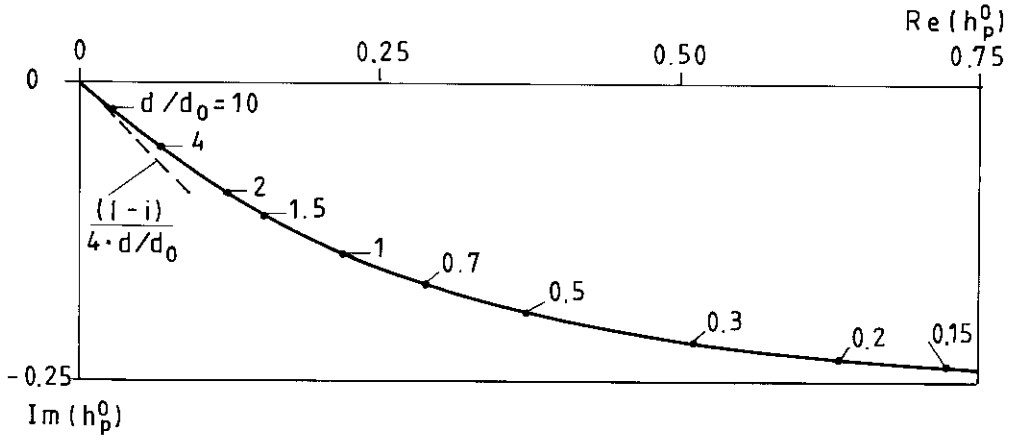

Figure 9.2: Heat loss factor $h_p^0(d/d_0)$ in the complex plane.

The absolute value of h_p^0 and the phase ϕ_p^0 are shown in Figure 9.3 in a real-valued representation. Asymptotic values for small and large values of d/d_0 are given in Figure 9.2-3. The parameter d/d_0 becomes large for well insulated slabs (large d), or short time periods (small d_0). In complex-valued form the approximation for large d/d_0 becomes:

$$h_p^0(d/d_0) \approx \frac{1-i}{4d/d_0} \qquad d/d_0 \gg 1 \tag{9.4}$$

This approximation is shown in Figures 9.2 and 9.3 as dashed curves.

The maximum phase delay ϕ_p^0 becomes 1/8 according to (9.2) and (9.4). For a time period of one year the maximum time delay becomes 1/8· 1 year=1.5 months.

Example 9.1:

We take the following data from reference case A:

$T_1 = 10\,°\mathrm{C}$
d_i =0.08 m $\qquad a = 0.75 \cdot 10^{-6}$ m^2/s
$\lambda = 1.5$ W/mK $\quad \lambda_i = 0.04$ W/mK

These data give: $d = 3.0$ m

Case i, t_0=1 year

$d_0 = \sqrt{at_0/\pi} = \sqrt{365 \cdot 24 \cdot 3600 \cdot 0.75 \cdot 10^{-6}/\pi} = 2.74$ m
d/d_0 =1.1

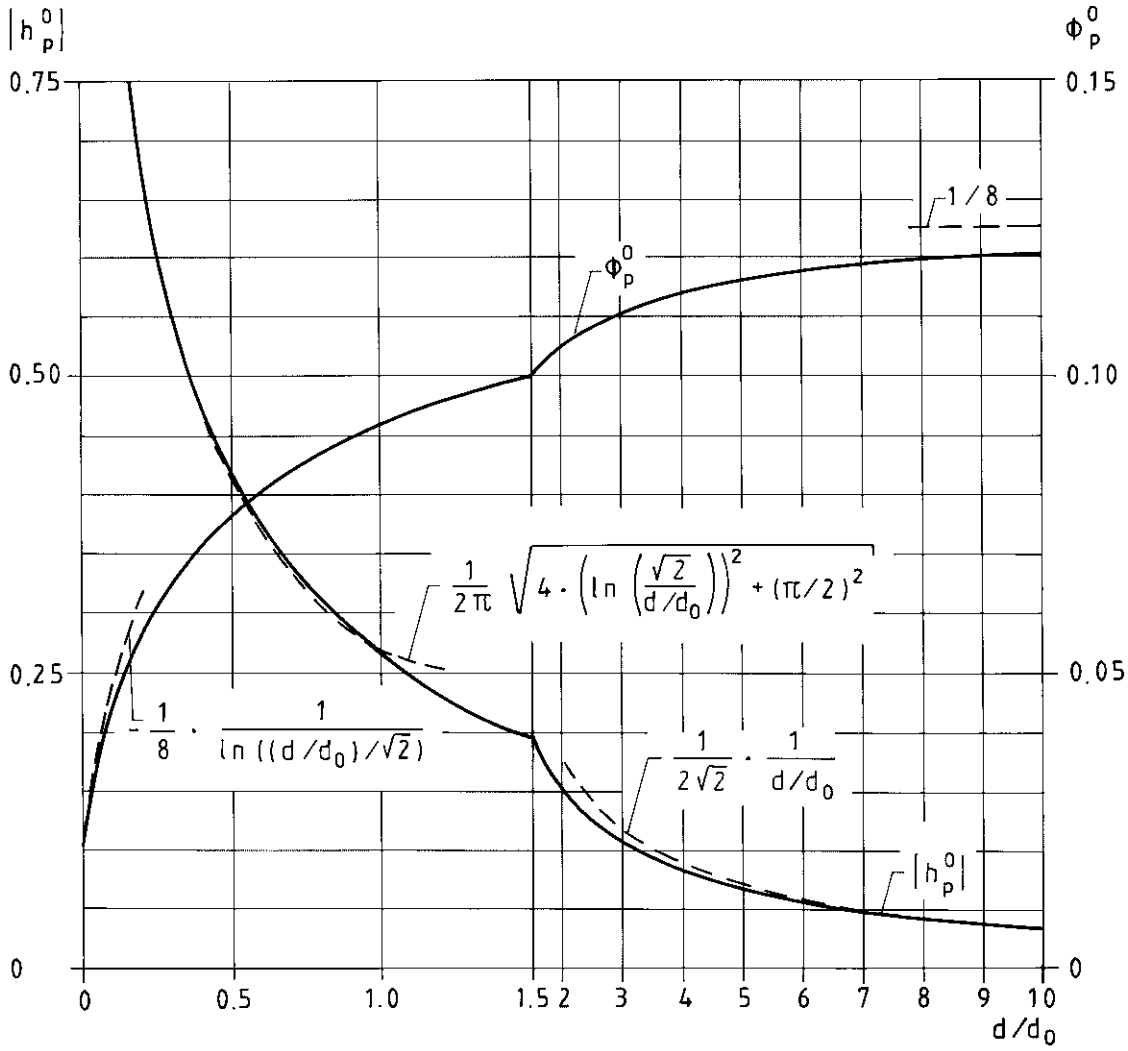

Figure 9.3: Absolute value and phase ϕ_p^0 for the basic heat loss factor h_p^0.

From Figure 9.3 we get:

$|h_p^0| \approx 0.24 \qquad \phi_p^0 \approx 0.094$

Combining this with (9.2), we get the amplitude and time delay for the heat loss:

$\lambda T_1 \cdot |h_p^0| = 3.6$ W/m
$\phi_p^0 \cdot t_0$=34 days
$q_p(t) = -3.6 \cdot \sin(2\pi(t/t_0 - 0.094))$ W/m

Case ii, t_0=2 weeks

$d_0 = \sqrt{at_0/\pi} = \sqrt{14 \cdot 24 \cdot 3600 \cdot 0.75 \cdot 10^{-6}/\pi} = 0.54$ m
d/d_0 =5.6

From Figure 9.3 we get:

$|h_p^0| \approx 0.061 \qquad \phi_p^0 \approx 0.12$

Combining this with (9.2) we get the amplitude and time delay for the heat loss:

$\lambda T_1 \cdot |h_p^0| = 0.92$ W/m
$\phi_p^0 \cdot t_0$=1.6 days
$q_p(t) = -0.92 \cdot \sin(2\pi(t/t_0 - 0.12))$ W/m

Case iii, t_0=1 day

$d_0 = \sqrt{at_0/\pi} = \sqrt{24 \cdot 3600 \cdot 0.75 \cdot 10^{-6}/\pi} = 0.14$ m
d/d_0 =21

From (9.4) we get:

$|h_p^0| \approx 0.017, \phi_p^0 \approx 1/8$

Combining this with (9.2) we get the amplitude and time delay for the heat loss:

$\lambda T_1 \cdot |h_p^0| = 0.25$ W/m
$\phi_p^0 \cdot t_0$=3 hours
$q_p(t) = -0.25 \cdot \sin(2\pi(t/t_0 - 1/8))$ W/m

For edge heat loss problem shown in Figure 9.1 we have $d_1 = 0$. Figure 9.4 shows

the general case with a thermal resistance at the ground surface. The equivalent insulation thickness is d_1 along $z = 0$, $-\infty < x < 0$. It may represent a heat transfer coefficient at the ground surface or snow according to Formulæ 3.19 and 3.22.

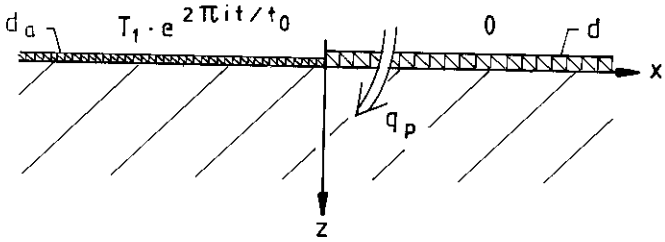

Figure 9.4: Periodic heat loss problem at the edge of a slab with a thermal resistance at the ground surface ($d_1 \neq 0$).

The heat loss problem of Figure 9.4 contains three lengths: d, d_1 and d_0. The heat loss factor h_p depends on two non-dimensional parameters. We will use d/d_0 and d_1/d. The heat loss becomes:

$$q_p(t) = \Re/\Im\left\{-\lambda T_1 \cdot h_p^1(d/d_0, d_1/d) \cdot e^{2\pi i t/t_0}\right\} \tag{9.5}$$

For this case we use the notation h_p^1 to indicate that there is a thermal resistance with the equivalent insulation thickness d_1 at the ground surface. This problem is solved in [1]. The heat loss factor h_p^1 can be expressed in terms of the basic heat loss factor h_p^0. From Formulæ 3.3.14-15 in [1] we have:

$$h_p^1(d/d_0, d_1/d) = \frac{d}{d-d_1} \cdot h_p^0(d/d_0) + \frac{d_1}{d_1-d} \cdot h_p^0(d_1/d_0) \qquad (d \neq d_1) \tag{9.6}$$

Here the complex-valued expression for h_p^0 is given by (9.3). The denominator becomes zero for $d = d_1$. For this case we have Formula 3.3.18 in [1]:

$$h_p^1(d/d_0, 1) = \frac{1}{r^2}\left(h_p^0(d/d_0) - \frac{1}{\pi}\right) \qquad (d = d_1) \tag{9.7}$$

The variable r is given in (9.3).

It is interesting to notice that h_p^1 is symmetrical with respect to d and d_1. Formula (9.6) gives:

$$h_p^1(d/d_0, d_1/d) = h_p^1(d_1/d_0, d/d_1) \tag{9.8}$$

It is only necessary to give the heat loss factor for $0 \leq d_1 \leq d$. The symmetry properties of h_p^1 are studied in detail in [1].

Figure 9.2 shows $h_p^0(d/d_0)$ in the complex plane. The corresponding figure for the heat loss factor $h_p^1(d/d_0, d_1/d)$ is shown in Figure 9.5. Every pair of parameters gives a point in the complex plane. The continuous curves give h_p^1 as a function of d/d_0 for a fixed d_1/d. The curve $d_1/d_0 = 0$ gives h_p^0 according to Figure 9.2. The dashed curves give h_p^1 as a function of d_1/d, $0 \leq d_1/d \leq 1$, for a fixed d/d_0. The absolute value and phase of $h_p^1(d/d_0, d_1/d)$ are shown in Figure 9.6.

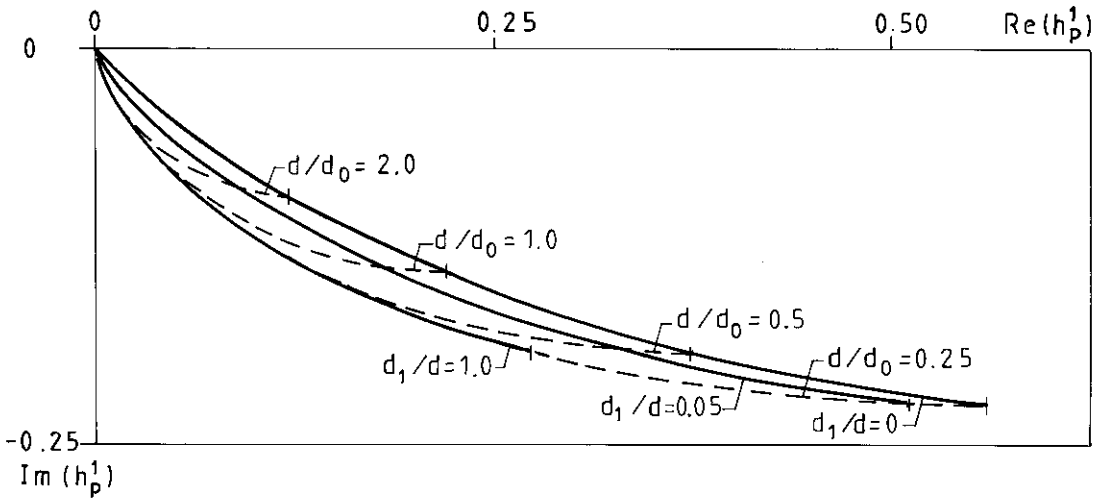

Figure 9.5: Heat loss factor $h_p^1(d/d_0, d_1/d)$ represented in the complex plane.

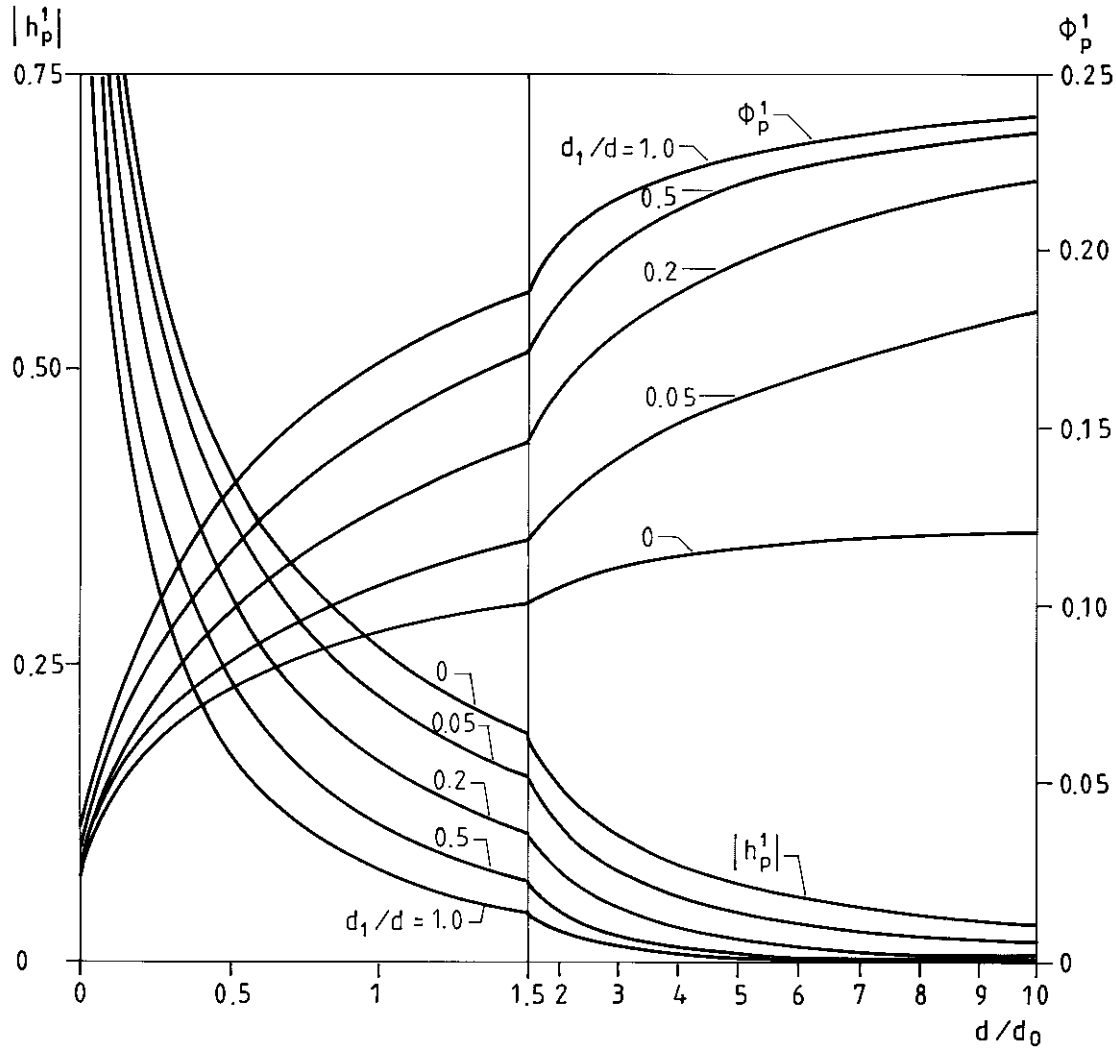

Figure 9.6: Absolute value $|h_p^1|$ and phase ϕ_p^1 for the heat loss factor $h_p^1(d/d_0, d_1/d)$.

Example 9.2:

We take the following data:

$d/d_0 = 0.5 \qquad d_1/d = 0.2$

The real and imaginary parts of h_p^1 are obtained from Figure 9.5:

$h_p^1(0.5, 0.2) \approx 0.256 - i \cdot 0.178$

We may use Figure 9.6 instead:

$|h_p^1| \approx 0.310 \qquad \phi_p^1 \approx 0.098$
$h_p^1(0.5, 0.2) \approx 0.310 \cdot e^{-2\pi i \cdot 0.098} = 0.253 - i \cdot 0.179$

9.2 GENERAL HEAT LOSS FORMULA

Using the edge approximation given in Section 7.1, a *general formula for the periodic heat loss* can be given. Let the total periodic heat loss be denoted by Q_p (W). From (7.3-4) we get:

$$Q_p(t) = q_p(t) \cdot L_e = \Re/\Im \left\{ -\lambda T_1 L_e \cdot h_p \cdot e^{2\pi i t/t_0} \right\} \qquad d_0 < L_{min}/2 \tag{9.9}$$

Here L_e is the perimeter length. For a rectangular house it is equal to $2L+2B$. The minimum dimension of the foundation in the horizontal plane is L_{min}.

The heat loss factor h_p for the case $d_1 = 0$ is given by $h_p^0(d/d_0)$ according to (9.3). It is shown in Figure 9.3. For the general case $d_1 \neq 0$, h_p is given by $h_p^1(d/d_0, d_1/d)$ according to Formula (9.6) and Figure 9.6.

Example 9.3:

The data of reference case C give:

$\lambda T_1 L_e = 1.5 \cdot 10 \cdot (2 \cdot 30 + 2 \cdot 15) = 1350$ W
$d = 0.08 \cdot 1.5/0.04 = 3$ m
$d_0 = 2.74$ m $\qquad d/d_0 = 1.1$
$h_p = h_p^0(1.1)$

Figure 9.3 gives:

$|h_p^0| = 0.24 \qquad \phi_p^0 = 0.094$

This gives:

$Q_p(t) = -324 \cdot \sin(2\pi(t/t_0 - 0.094))$ W

Thus the amplitude of the periodic heat loss becomes 324 W. The time delay relative to the outdoor temperature becomes:

$t_0 \cdot \phi_p^0$=34 days

Example 9.4:

The data of reference case A give:

$\lambda T_1 L_e = 1.5 \cdot 10 \cdot (2 \cdot 12 + 2 \cdot 8) = 600$ W
$d = 0.08 \cdot 1.5/0.04$=3 m
$d_0 = 2.74$ m $\quad d/d_0 = 1.1$
$h_p = h_p^0(1.1)$

Figure 9.3 gives:

$|h_p^0| = 0.24 \qquad \phi_p^0 = 0.094$

This gives:

$Q_p(t) = -144 \cdot \sin(2\pi(t/t_0 - 0.094))$ W

Thus the amplitude of the periodic heat loss becomes 144 W. The time delay relative to the outdoor temperature becomes:

$t_0 \cdot \phi_p^0$=34 days

Example 9.5:

The data of reference case B give:

$\lambda T_1 L_e = 1.5 \cdot 10 \cdot (2 \cdot 30 + 2 \cdot 15) = 600$ W
$d = 0.16 \cdot 1.5/0.04$=6 m
$d_0 = 2.74$ m $\quad d/d_0 = 2.2$
$h_p = h_p^0(2.2)$

Figure 9.3 gives:

$|h_p^0| = 0.14 \qquad \phi_p^0 = 0.11$

This gives:

$Q_p(t) = -84 \cdot \sin(2\pi(t/t_0 - 0.11))$ W

Thus the amplitude of the periodic heat loss becomes 84 W. The time delay relative to the outdoor temperature becomes:

$t_0 \cdot \phi_p^0$=40 days

For an outdoor temperature which contains several periodic components, the total heat loss is obtained by superposition. See Formulæ 4.12-13. The time period for the temperatures (4.12) is t_0/n, where n is an integer. The heat loss component $Q_{p,n}$ becomes:

$$Q_{p,n}(t) = -\lambda T_n L_e \cdot |h_{p,n}| \cdot \sin(2\pi(nt/t_0 - \phi_{p,n}) + f_n) \tag{9.10}$$

The amplitude and the phase are taken for the periodic penetration depth $d_{0,n}$:

$$d_{0,n} = \sqrt{\frac{at_0}{n\pi}} = \frac{d_0}{\sqrt{n}} \qquad n = 1, 2 \ldots \tag{9.11}$$

The total periodic heat loss is from (4.13):

$$Q_p(t) = \sum_{n=1}^{\infty} Q_{p,n}(t) \tag{9.12}$$

Example 9.6:

In [17], approximate outdoor temperatures are given for different places in Europe. The following temperature approximation with two periodic components is given for Stockholm:

$$T_{out}(t) = 6.7 + 10.1 \cdot \sin(2\pi t/t_0 - 1.95) + 0.81 \cdot \sin(2\pi \cdot 2t/t_0 - 4.46) \qquad (°C)$$

For reference case A we get:

$$d/d_{0,1} = 1.1 \qquad |h_{p,1}^0| = 0.24 \qquad \phi_{p,1}^0 = 0.094$$
$$d/d_{0,2} = \sqrt{2} \cdot 1.1 = 1.6 \qquad |h_{p,2}^0| = 0.18 \qquad \phi_{p,2}^0 = 0.10$$

From (9.10) and (9.12) we get the periodic heat loss:

$$\begin{aligned} Q_p(t) = & -1.5 \cdot 10.1 \cdot 40 \cdot 0.24 \cdot \sin(2\pi(t/t_0 - 0.094) - 1.95) - \\ & -1.5 \cdot 0.81 \cdot 40 \cdot 0.18 \cdot \sin(2\pi(2t/t_0 - 0.10) - 4.46) = \\ & = -145.4 \cdot \sin(2\pi(t/t_0 - 0.094) - 1.95) - \\ & -8.8 \sin(2\pi(2t/t_0 - 0.10) - 4.46) \text{ (W)} \end{aligned}$$

We see that the second periodic term is negligible in this case.

It is interesting to compare the periodic heat loss with the steady-state loss. According to Figure 8.2 and Formula 8.2 the steady-state heat loss for the annual mean outdoor temperature of Stockholm (6.7 °C) becomes:

$$d/B = 3/8 \qquad L/B = 1.5 \quad \rightarrow \quad h_s = 1.58$$
$$Q_s = 1.5 \cdot (20 - 6.7) \cdot 12 \cdot 1.58 \approx 380 \text{ W}$$

9.3 A FEW EXAMPLES AND ANALYSES

9.3.1 VARIATION OF THE PERIOD TIME t_0

The periodic penetration depth d_0 depends on the time period t_0, (4.45). The periodic penetration depth d_0 is proportional to the square root of t_0.

Example 9.7:

Let us study reference case A. We have the following data:

$L = 12$ m $\quad B = 8$ m

The edge length becomes:

$L_e = 2 \cdot 12 + 2 \cdot 8 = 40$ m

The total periodic heat loss is according to (9.9) equal to $q_p \cdot L_e$. The edge heat loss q_p is obtained from Example 9.1. We get:

Case i, t_0=1 year

$Q_p(t) = -144 \cdot \sin(2\pi(t/t_0 - 0.094))$ W/m

Case ii, t_0=2 weeks

$Q_p(t) = -37 \cdot \sin(2\pi(t/t_0 - 0.12))$ W/m

Case iii, t_0=1 day

$Q_p(t) = -10 \cdot \sin(2\pi(t/t_0 - 1/8))$ W/m

The steady-state heat loss for the corresponding reference case A is obtained from Example 8.1:

$Q_s = 427$ W

Example 9.7 shows that the periodic heat loss with a time period of one day is negligible compared with the steady-state heat loss and the heat loss with a time period of one year. The periodic heat loss with a time period of two weeks also gives a relatively small contribution to the total heat loss.

9.3.2 VARIATION OF THE THERMAL PROPERTIES OF THE GROUND

The thermal properties of the ground are given by the thermal conductivity λ (W/mK) and the thermal diffusivity a (m^2/s). The thermal conductivity influences the heat loss in two ways. It is a proportionality factor in all heat loss formulæ . It also determines, together

with the thermal resistance, the size of the equivalent insulation thickness d. The heat loss increases for increasing λ due to the proportionality. This is however somewhat counteracted by the increased value for d.

The thermal diffusivity a influences the value of d_0 according to (4.45). The penetration depth is proportional to the square root of a. The heat loss increases for increasing value of a. It is however quite insensitive to small variations in a.

Example 9.8:

We take the data of reference case A except for the thermal conductivity of the ground. For granite we have:

$$\lambda = 3.5 \text{ W/mK} \qquad a = 1.6 \cdot 10^{-6} \text{m}^2/\text{s}$$

We get:

$$\lambda T_1 L_e = 3.5 \cdot 10 \cdot (2 \cdot 12 + 2 \cdot 8) = 1400 \text{ W}$$
$$d = 0.08 \cdot 3.5/0.04 = 7 \text{ m}$$
$$d_0 = \sqrt{1.6 \cdot 10^{-6} \cdot 3600 \cdot 24 \cdot 365/\pi} = 4.0 \text{ m}$$
$$d/d_0 = 1.75$$

Figure 9.3 gives:

$$|h_p^0(1.75)| = 0.17 \qquad \phi_p^0(1.75) = 0.103$$

The imaginary part of Formula 9.9 gives the heat loss:

$$Q_p(t) = -238 \cdot \sin(2\pi(t/t_0 - 0.103)) \text{ W}$$

The heat loss for reference A with the original data is according to Example 9.4:

$$Q_p(t) = -144 \cdot \sin(2\pi(t/t_0 - 0.094)) \text{ W}$$

The change of ground material to granite increases the amplitude by 65%.

9.3.3 THERMAL RESISTANCE AT THE GROUND SURFACE

In Example 9.8 the thermal resistance at the ground surface was neglected ($d_1 = 0$). In this section the effect of a finite heat transfer coefficient α (W/m^{2}K) or snow at the ground

surface is studied in a few examples.

Example 9.9:

The periodic heat loss for reference case A ($d_1 = 0$) with t_0=1 year, 2 weeks and 1 day was calculated in Example 9.7. In this example we will study the same problem but with a finite value for α at the ground surface. Let use the following normal value:

$\alpha = 10$ W/m^{2}K

According to (3.19) the equivalent insulation thickness d_1 becomes:

$d_1 = \lambda/\alpha = 1.5/10 = 0.15$ m

Thus the heat transfer coefficient corresponds to 15 cm of soil. For the case $t_0 = 1$ year we have:

$d_0 = 2.74$ m

The absolute value of the heat loss factor is obtained from Figure 9.6:

$d = 3$ m $\quad d/d_0 = 1.1 \quad d_1/d = 0.05$
$|h_p^1(1.1, 0.05)| = 0.20$

In Example 9.4 the corresponding heat loss factor was:

$|h_p^0| = 0.24$

The ratio between these two heat loss factors shows the effect of the heat transfer coefficient α:

$|h_p^1(1.1, 0.05)|/|h_p^0(1.1)| = 0.83$

The amplitude for Q_p is reduced by 17 %. For t_0=2 weeks we get:

d_0 =0.54 m
$|h_p^1(5.6, 0.05)|/|h_p^0(5.6)| = 0.036/0.060 = 0.60$

For t_0=1 day we get:

d_0 =0.14 m
$|h_p^1(21, 0.05)|/|h_p^0(21)| = 0.005/0.017 = 0.30$

Formula 9.6 and the approximation of h_p^0 for large values of d/d_0 have been used for this last case.

Example 9.9 shows that a thermal resistance at the ground surface strongly reduces the heat loss. The reduction is largest for short time periods. In Example 9.7 ($d_1 = 0$) it was shown that the periodic heat loss is negligible for short time periods. This conclusion is strengthened by the results in Example 9.9.

The reduction of the heat loss Q_p for the annual variation due to a thermal resistance at the ground surface is moderate (17 % for the example). Thus the thermal resistance at the ground surface must be considered in order to get a calculation of the heat loss with high accuracy. However, α is not a critical parameter. The heat loss is not too sensitive for this usually less known parameter.

Example 9.10:

Consider Example 9.9 with snow at the ground surface. Let us assume the following data for the snow:

$d_{snow} = 0.06$ m $\qquad \lambda_{snow} = 0.15$ W/mK

The equivalent insulation thickness d_1 for the snow becomes, (3.22):

$d_1 = 0.06 \cdot 1.5/0.15 = 0.6$ m $\qquad d_1/d = 0.2$

For the case with snow, only short time periods during the winter are considered. For t_0= 2 weeks we get the following ratio between the heat loss factors with and without the snow:

$|h_p^1(5.6, 0.2)|/|h_p^0(5.6)| = 0.015/0.060 = 0.25$

The snow reduces the heat loss by 75 %. For t_0= 1 day the ratio becomes:

$|h_p^1(21, 0.2)|/|h_p^0(21)| = 0.0016/0.017 = 0.09$

The snow reduces the heat loss by 90 %.

Example 9.10 deals with a small snow depth, 6 cm. In general we can conclude that snow strongly reduces the heat loss for time periods up to a few weeks.

Chapter 10

STEP CHANGE OF OUTDOOR TEMPERATURE

The outdoor step-change temperature process is shown in Figure 4.5. The outdoor temperature is increased from zero to T_2 at time $t = 0$. The outdoor temperature decreases if T_2 is negative. The temperature above the insulation of the building is zero. The temperature in the ground is zero at $t = 0$.

10.1 HEAT LOSS FACTOR FOR AN EDGE

Figure 10.1 illustrates the heat loss problem for a temperature step at the edge of a slab. The temperature process is two-dimensional in a vertical cross-section perpendicular to the edge line of the slab. The slab with the equivalent insulation thickness d extends from $x = 0$ to $x = \infty$.

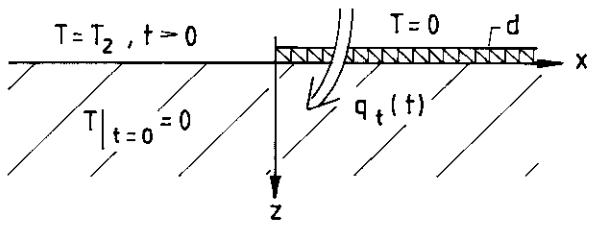

Figure 10.1: Step change of the outdoor temperature at the edge of a slab.

10.1.1 HEAT LOSS FACTOR h_t^0

The thermal resistance at the ground surface, $x < 0, z = 0$, is assumed to be zero ($d_1 = 0$). The heat loss is given by Formula (5.26). The problem contains the two lengths d and $\sqrt{at}$. The *basic step-change heat loss factor* h_t^0 will depend on the dimensionless parameter $\sqrt{at}/d$ only:

$$q_t(t) = -\lambda T_2 \cdot h_t^0(\sqrt{at}/d) \qquad \text{(W/m)} \tag{10.1}$$

The analytical expression for the heat loss factor is given by Formula 5.2.12 in the supplementary report [1]:

$$h_t^0(\tau) = \frac{1}{\sqrt{\pi}} \int_0^\tau e^{s^2} \cdot \operatorname{erfc}(s)\, ds \tag{10.2}$$

Here we have the non-dimensional time variable $\tau = \sqrt{at}/d$. The basic heat loss factor $h_t^0(\tau)$ is given in Figure 10.2 and Table 10.1.

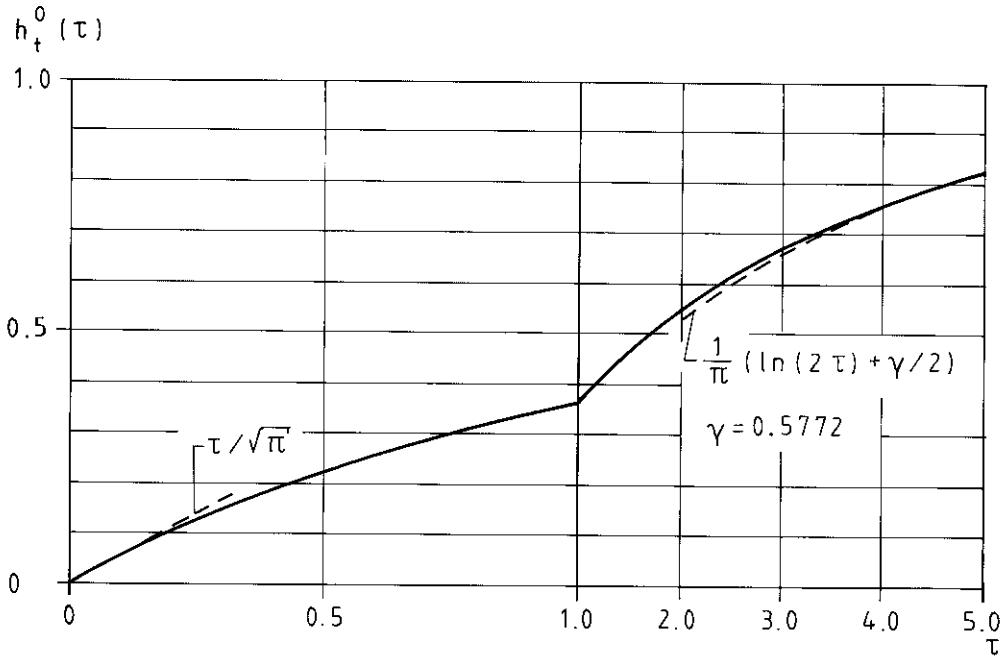

Figure 10.2: The function $h_t^0(\tau)$, (10.2), which gives the heat loss for an outdoor temperature step according to (10.1-2).

τ	0	0.1	0.2	0.3	0.4	0.5	1.0	1.5	2.0
$h_t^0(\tau)$	0	0.053	0.101	0.145	0.185	0.221	0.365	0.470	0.550
τ	2.5	3.0	4.0	5.0	6.0	7.0	8.0	9.0	10.0
$h_t^0(\tau)$	0.616	0.670	0.758	0.828	0.885	0.935	0.975	1.012	1.045

Table 10.1: The function $h_t^0(\tau)$.

Asymptotic expressions for $h_t^0(\tau)$ are given by Formulæ 5.2.19 and 5.2.22 in [1]:

$$h_t^0(\tau) \approx \frac{\tau}{\sqrt{\pi}} \qquad (\tau < 0.2) \tag{10.3}$$

$$h_t^0(\tau) \approx \frac{1}{\pi}(\ln(2\tau) + \gamma/2) \qquad (\tau > 2) \tag{10.4}$$

$$\gamma = 0.5772\ldots \text{(Euler's constant)}$$

These approximations are shown in Figure 10.2 as dashed curves.

10.1.2 ACCUMULATED HEAT LOSS FACTOR e_t^0

The accumulated heat loss $E_t(t)$ (J/m) for the edge is defined in (5.27). The dimensionless *accumulated heat loss factor* is denoted by e_t^0. According to (5.30) it depends on the parameter $\sqrt{at}/d$ only:

$$E_t(t) = -CT_2d^2 \cdot e_t^0(\sqrt{at}/d) \qquad \text{(J/m)} \tag{10.5}$$

The factor CT_2d^2 has the dimension J/m. Here $C = \lambda/a$ (J/m^{3}K) is the volumetric heat capacity. Combining (10.1-2) and (5.27) we get:

$$e_t^0(\tau) = h_t^0(\tau)\left(\tau^2 + \frac{1}{2}\right) - \frac{\tau}{2\sqrt{\pi}}e^{\tau^2} \cdot \text{erfc}(\tau) - \frac{\tau^2}{2\pi} \tag{10.6}$$

The function $e_t^0(\tau)$ is shown in Figure 10.3. The dashed curves show approximations for small and large values of τ.

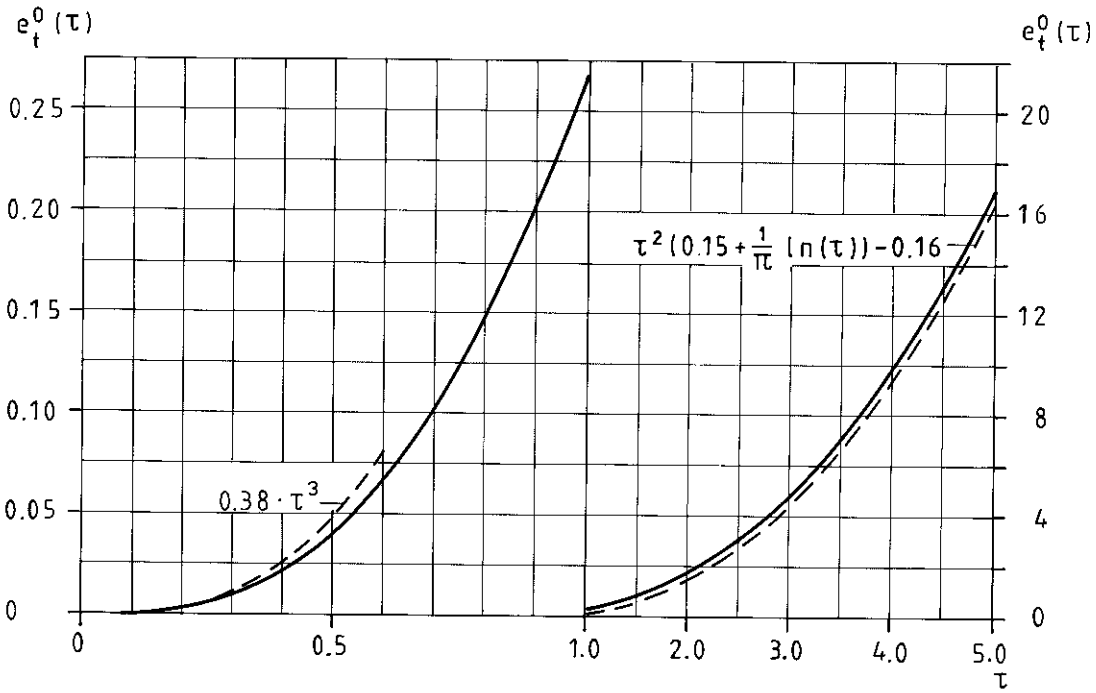

Figure 10.3: Dimensionless accumulated heat loss factor for an outdoor temperature step according to (10.5-6).

Example 10.1:

Consider a temperature step T_2 at $t = 0$ with data from reference case A and B. The reference case C gives the same results as case A. We have:

$\lambda = 1.5$ W/mK $\qquad a = 0.75 \cdot 10^{-6}$ m^2/s
$T_2 = -15$ °C $\qquad d_1 = 0$

The volumetric heat capacity C becomes:

$C = \lambda/a = 2 \cdot 10^6$ J/m^{3}K

The equivalent insulation thickness d becomes:

$d = 0.08 \cdot 1.5/0.04 = 3$ m (case A)
$d = 0.16 \cdot 1.5/0.04 = 6$ m (case B)

Let t_d denote the time in days. We get:

$\tau = \sqrt{at}/d = \sqrt{0.75 \cdot 10^{-6} \cdot t_d \cdot 3600 \cdot 24}/3$
$\tau \approx \sqrt{t_d/139}$ (case A)
$\tau \approx \sqrt{t_d/556}$ (case B)

For t_d =7 days we get the following heat loss for case A:

$q_t = 1.5 \cdot 15 \cdot h_t^0(\sqrt{7/139}) \approx 1.5 \cdot 15 \cdot 0.112 = 2.5$ W/m
$E_t = 2.0 \cdot 10^6 \cdot 15 \cdot 3^2 \cdot e_t^0(\sqrt{7/139}) \approx 0.99 \cdot 10^6 = 0.27$ kWh/m

The table below gives q_t and E_t for a few times for the two alternatives:

Case A (d=3 m):

t (days)	0	1/24	1	2	4	7	14	30	90
q_t (W/m)	0	0.26	0.97	1.43	1.97	2.5	3.45	4.65	7.06
E_t (kWh/m)	0	0.0002	0.014	0.046	0.13	0.27	0.82	2.31	10.9

Case B (d=6 m):

t (days)	0	1/24	1	2	4	7	14	30	90
q_t (W/m)	0	0.13	0.50	0.74	0.97	1.31	1.86	2.59	4.15
E_t (kWh/m)	0	0.0001	0.007	0.023	0.056	0.14	0.43	1.25	6.19

10.1.3 THERMAL RESISTANCE AT THE GROUND SURFACE

The thermal resistance d_1 at the ground surface was zero in the previous sections. An additional length occurs in the scaling of the heat loss factor for $d_1 > 0$. The thermal problem contains three lengths: $\sqrt{at}, d$ and d_1. The heat loss factor becomes a function of $\sqrt{at}/d$ and d_1/d:

$$q_t(t) = -\lambda T_2 \cdot h_t^1(\sqrt{at}/d, d_1/d) \tag{10.7}$$

The upper index 1 of the heat loss factor is used to mark that $d_1 \neq 0$. From Formula 5.2.13 in [1] we get the following analytical expression for the heat loss factor:

$$h_t^1(\sqrt{at}/d, d_1/d) = \frac{d}{d-d_1} h_t^0(\sqrt{at}/d) + \frac{d_1}{d_1-d} h_t^0(\sqrt{at}/d_1) \qquad (d_1 \neq d) \tag{10.8}$$

Here h_t^0 is the previously defined basic heat loss factor (10.2). For the case $d = d_1$ the denominator becomes zero. From Formula 5.2.14 in [1] we have:

$$h_t^1(\tau, 1) = h_t^0(\tau) - \frac{\tau}{\sqrt{\pi}} e^{\tau^2} \cdot \mathrm{erfc}(\tau) \qquad (\tau = \sqrt{at}/d) \qquad (d_1 = d) \tag{10.9}$$

The heat loss factor $h_t^1(\tau, d_1/d)$, (10.8), has the following symmetry property, which means that h_t^1 is the same, when d_1 and d are exchanged so that d_1 is the internal insulation.

$$h_t^1(\sqrt{at}/d, d_1/d) = h_t^1(\sqrt{at}/d_1, d/d_1) \tag{10.10}$$

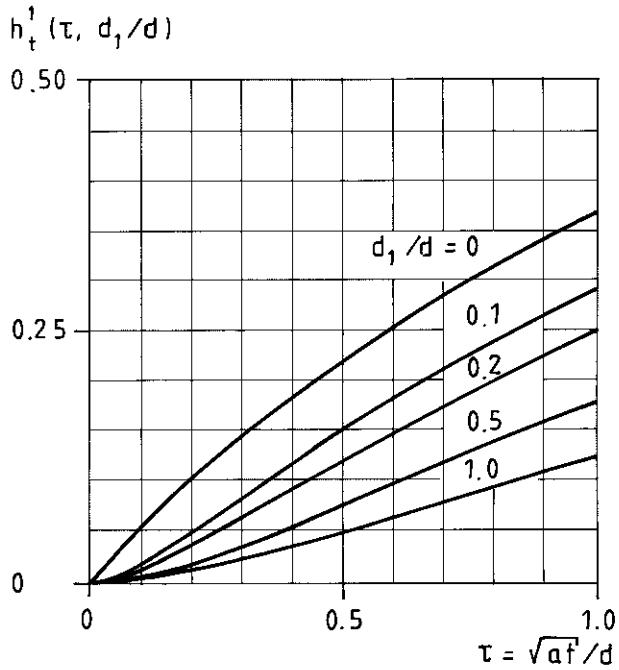

Figure 10.4: The heat loss factor $h_t^1(\tau, d_1/d)$ for an outdoor temperature step.

Example 10.2:

In Example 10.1 the heat loss q_t became 2.5 W/m after 7 days for case A. The heat loss factor was:

$$h_t^0(\sqrt{7/139}) \approx 0.112$$

Consider a change of the thermal resistance at the ground surface from $d_1 = 0$ to $d_1 = 0.3$ m. The parameter d_1/d becomes equal to 0.1. We get the heat loss factor from Figure 10.4:

$$h_t^1(\sqrt{7/139}, 0.1) \approx 0.060$$

The heat loss q_t is obtained from (10.7). The heat loss is reduced from $q_t = 2.5$ W/m for $d_1 = 0$ to:

$$q_t(t) \approx 2.5 \cdot 0.112/0.060 = 1.3 \text{ W/m} \qquad (t\text{=7 days})$$

Example 10.2 shows that a thermal resistance at the ground surface gives a relatively strong reduction in heat loss for a temperature step. The relative difference between the curve $d_1/d = 0$ and, for instance, $d_1/d = 0.1$ in Figure 10.4 decreases with increasing time. Thus the importance of the surface resistance decreases with increasing time.

For a ground covered with snow we get large values for d_1/d. Thus the heat loss is reduced strongly for this case.

10.2 APPROXIMATE HEAT LOSS FORMULA FOR SHORT AND LONG TIMES

A general approximate formula for the step-change heat loss is derived in this section. The heat loss Q_t (W) is obtained from an edge approximation and a steady-state approximation.

So far we have discussed the two-dimensional temperature process at the edges of the slab. This process is significant for short times. According to Formula 7.8 in Section 7.2 we have the condition $\sqrt{at} < L_{min}/2$, where L_{min} is the minimum dimension of the foundation in the horizontal plane. For large times the temperature process tends to the steady-state one. The step-change heat loss factor tends to the steady-state one according to (5.25). In the intermediate time interval the step-change heat loss factor is obtained from three-dimensional transient temperature calculations.

We will first study a two-dimensional case with a slab of finite width B and constant insulation thickness d. Here there are three lengths in the heat conduction problem: $\sqrt{at}, d, B$. The heat loss factor will depend on two dimensionless parameters. From (5.24) and (5.26) we get:

$$q_t(t) = -\lambda T_2 \cdot h_t(\sqrt{at}/d, d/B) \tag{10.11}$$

Here we have chosen $\sqrt{at}/d$ instead of $\sqrt{at}/B$. The heat loss factor is calculated numerically. It is shown in Figure 10.5 for the case $d = 0.3 \cdot B$.

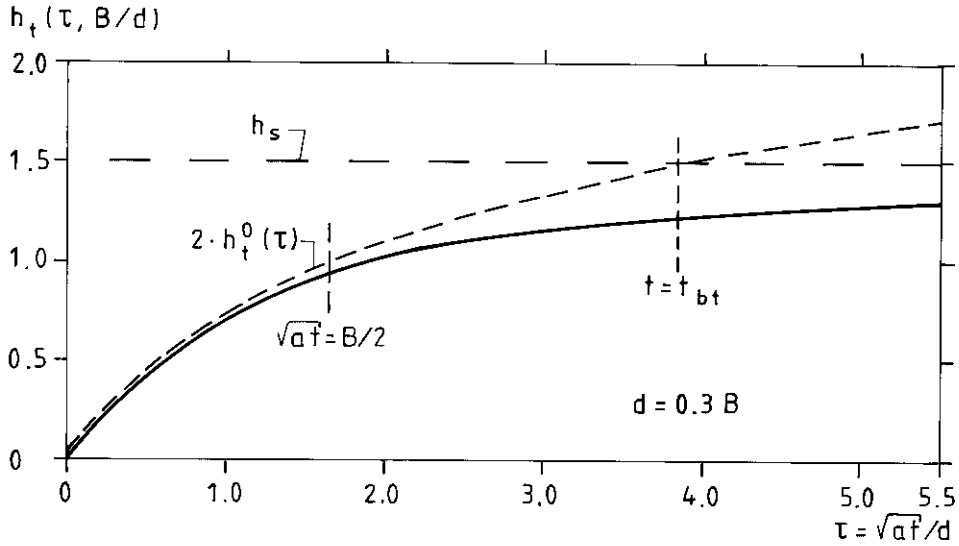

Figure 10.5: The heat loss factor h_t for a two-dimensional case. The dashed curve gives the edge approximation (10.12). The horizontal line gives the steady-state heat loss factor.

During the first time the edge approximation can be used. Using (10.1) for the *two* edges we get:

$$q_t(t) \approx -2\lambda T_2 \cdot h_t^0(\sqrt{at}/d) \tag{10.12}$$

According to (7.8), the approximation is valid for:

$$\sqrt{at} < B/2 \tag{10.13}$$

The maximum error in this interval is 10 %.

For large times the heat loss factor can be approximated by the steady-state one according to (5.25):

$$h_t(\sqrt{at}/d, d/B) \approx h_s(d/B) \qquad t > t_{bt} \tag{10.14}$$

Here we have introduced a least time, t_{bt}, for the validity of (10.14). At the breaking time the edge approximation is equal to h_s. The steady-state heat loss factor $h_s(d/B)$ is obtained from Figure 8.11. The approximations are shown in Figure 10.5

Thus we have the following approximation for the two-dimensional heat loss q_t for a long slab:

$$q_t(t) \approx -\lambda T_2 \cdot \begin{cases} 2 \cdot h_t^0(\sqrt{at}/d) & t \leq t_{bt} \\ h_s(d/B) & t \geq t_{bt} \end{cases} \tag{10.15}$$

The breaking time is defined as the time when the two approximations coincide.

We get a similar approximation for a rectangular slab:

$$Q_t(t) \approx -\lambda T_2 \cdot \begin{cases} (2L + 2B) \cdot h_t^0(\sqrt{at}/d) & t \leq t_{bt} \\ L \cdot h_s(L/B, d/B) & t \geq t_{bt} \end{cases} \tag{10.16}$$

The steady-state heat loss factor is given in Figure 8.2. The breaking time t_{bt} is defined as the time when the two approximations coincide:

$$(2L + 2B) \cdot h_t^0(\tau_{bt}) = L \cdot h_s(L/B, d/B) \qquad \tau_{bt} = \sqrt{at_{bt}}/d \tag{10.17}$$

Example 10.3:

The breaking time for reference case A is given by:

$40 \cdot h_t^0(\tau_{bt}) = 12 \cdot h_s(1.5, 3/8) \approx 12 \cdot 1.58$
$\tau_{bt} = 1.53$ (Figure 10.2)
$t_{bt} = 3^2 \cdot 1.53^2/(0.75 \cdot 10^{-6})$ s=325 days

For reference case B we get:

$40 \cdot h_t^0(\tau_{bt}) = 12 \cdot 0.95 \qquad \tau_{bt} = 0.70$
$t_{bt} = 272$ days

For reference case C we get:

$90 \cdot h_t^0(\tau_{bt}) = 30 \cdot 2.08 \qquad \tau_{bt} = 3.2$
$t_{bt} = 3.9$ years

It is interesting to note that the breaking times are very large. For a small house with a width of about 10 m, the breaking time is roughly one year. For a larger house of the size given by reference C ($30 \cdot 15$ m^2) the breaking time a few years. The edge approximation is thus valid during the whole heating season for ordinary buildings.

10.3 PIECE-WISE CONSTANT OUTDOOR TEMPERATURE

The case with piece-wise constant outdoor temperature was discussed in Section 4.3.2. The outdoor temperature is given by Formula 4.16:

$$T_{out}(t) = T_0 + \sum_{j=1}^{n}(T_j - T_{j-1}) \cdot H(t - t_j) \qquad t < t_{n+1} \tag{10.18}$$

10.3.1 HEAT LOSS FORMULA USING THE EDGE APPROXIMATION

From the previous section we know that the edge approximation is valid during the whole heating season for ordinary buildings with dimensions of 10 m or more. According to (4.18), (7.8) and (10.1) the heat loss due to an outdoor temperature (10.18) becomes:

$$Q(t) \approx Q_s - \lambda L_e \cdot \sum_{j=1}^{n}(T_j - T_{j-1}) \cdot h_t^0 \left(\sqrt{a(t - t_j)}/d\right) \qquad t_n < t < t_{n+1} \tag{10.19}$$

Here L_e is the perimeter length of the slab. The basic heat loss factor h_t^0 is given by Figure 10.2. The heat loss factor is replaced by h_t^1, if there is thermal resistance at the ground surface. The heat loss factor h_t^1 is given by Formula 10.8 and Figure 10.4. The approximation is valid for times $t - t_j$ less than $L_{min}^2/(4a)$. Here L_{min} is the minimum dimension of the foundation in the horizontal plane.

According to (5.27) and (10.5), the accumulated edge heat loss from time zero to t is:

$$E(t) \approx E_s - Cd^2 L_e \cdot \sum_{j=1}^{n}(T_j - T_{j-1}) \cdot e_t^0 \left(\sqrt{a(t - t_j)}/d\right) \qquad t_n < t < t_{n+1} \tag{10.20}$$

Here $E_s = Q_s \cdot t$ is the accumulated steady-state heat loss.

Example 10.4:

The outdoor temperature is given by Figure 10.6. Here we have put $T_0 = 0$, since we are mainly interested in step-changes and not the steady-state part. There is a constant temperature for each month. The data are given by reference case A. We have:

$d = 3$ m $\qquad L_e = 40$ m
$\lambda L_e = 60$ W/K
$Cd^2 L_e = 2 \cdot 10^6 \cdot 3^2 \cdot 40 = 720 \cdot 10^6$ J/K=200 kWh/K

Let t_m denote one month. The time in the argument of h_t^0 and e_t^0 can be written in the following way:

$a(t - t_j)/d^2 = (t/t_m - t_j/t_m)/(d^2/(at_m))$
$d^2/(at_m) = 3 \cdot 3/(0.75 \cdot 10^{-6} \cdot 3600 \cdot 24 \cdot 365/12) = 4.57$

The heat loss for the coldest month, $3 \leq t/t_m \leq 4$, becomes:

$$Q(t) - Q_s \approx$$
$$\approx 60 \cdot \left\{4 \cdot h_t^0(\sqrt{(t/t_m - 1)/4.57}) + 6 \cdot h_t^0(\sqrt{(t/t_m - 2)/4.57}) + \right.$$
$$\left. + 5 \cdot h_t^0(\sqrt{(t/t_m - 3)/4.57})\right\}$$

The heat loss at the end of the coldest month, $t/t_m = 4$, becomes:

$$Q(t) - Q_s \approx$$
$$60 \cdot \{4 \cdot h_t^0(0.81) + 6 \cdot h_t^0(0.66) + 5 \cdot h_t^0(0.47)\}$$
$$\approx 60 \cdot \{4 \cdot 0.32 + 6 \cdot 0.27 + 5 \cdot 0.21\} = 237 \text{ W}$$

Figure 10.6 shows the heat loss during the whole period of 8 months.

The accumulated heat loss is obtained by Formula 10.20. One month after the last step ($t/t_m = 7$) we obtain:

$$E(7t_m) - E_s \approx$$
$$200 \cdot \left\{4 \cdot e_t^0(\sqrt{(7-1)/4.57}) + 6 \cdot e_t^0(\sqrt{(7-2)/4.57}) + 5 \cdot e_t^0(\sqrt{(7-3)/4.57}) - \right.$$
$$\left. -6 \cdot e_t^0(\sqrt{(7-4)/4.57}) - 6 \cdot e_t^0(\sqrt{(7-5)/4.57}) - 3 \cdot e_t^0(\sqrt{(7-6)/4.57})\right\}$$
$$= 200 \cdot \{4 \cdot 0.39 + 6 \cdot 0.32 + 5 \cdot 0.23 - 6 \cdot 0.15 - 6 \cdot 0.085 - 3 \cdot 0.033\} = 612 \text{ kWh}$$

The accumulated heat loss E_t is shown in Figure 10.6.

It is interesting to compare these heat losses with the steady-state heat loss for reference case A. From Example 8.1 we get:

$$Q_s = 427 \text{ W}$$

The accumulated heat loss due to this steady-state heat loss during six months is:

$$E_s = 0.427 \cdot 24 \cdot 365/2 = 1900 \text{ kWh}$$

The accumulated heat loss due to the pulses is relatively small compared with the accumulated steady-state heat loss:

10.3.2 SINGLE PULSE

A single pulse with a change of the outdoor temperature from zero to T_2 during a time period t_2 is studied in this section. For negative values of T_2, the pulse may be used to simulate the decrease of the temperature during a cold spell. For positive values of T_2 we can simulate a heat wave.

The pulse of the magnitude T_2 starts at $t = 0$ and has the duration t_2:

$$T_{out}(t) = T_2 \cdot (H(t) - H(t - t_2)) \tag{10.21}$$

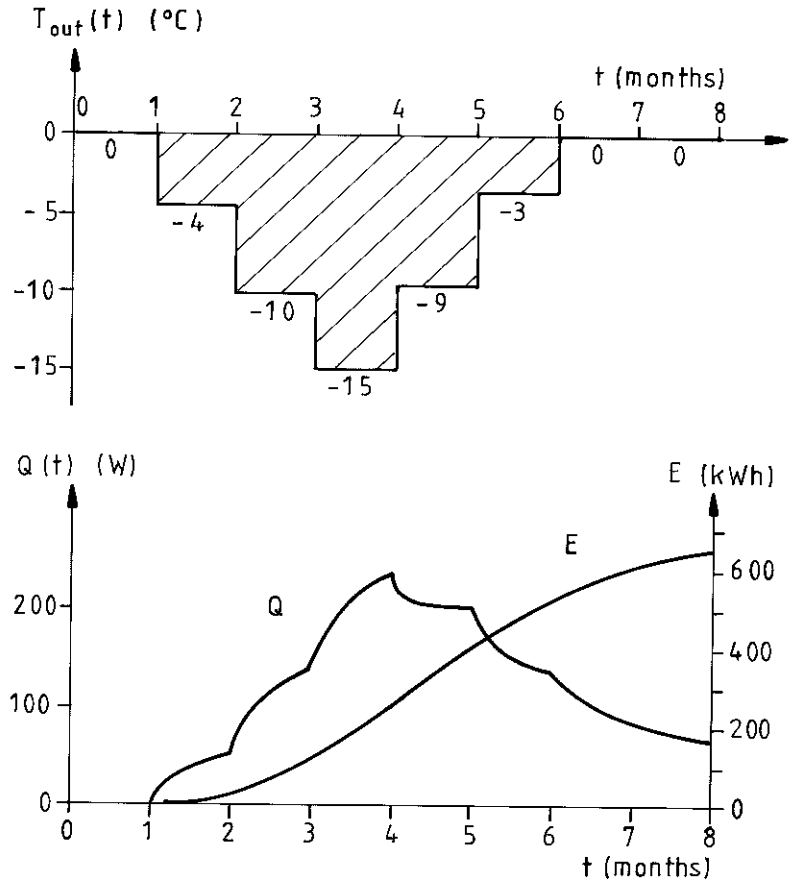

Figure 10.6: Outdoor temperature, heat loss and accumulated heat loss for Example 10.4.

Here we use (10.18) with $T_0 = 0$. Using the edge approximation according to (10.19) we get the following heat loss:

$$Q(t) \approx -\lambda T_2 L_e \cdot h_t^0(\sqrt{at}/d) \quad 0 < t < t_2 \tag{10.22}$$

$$Q(t) \approx -\lambda T_2 L_e \cdot \left\{ h_t^0(\sqrt{at}/d) - h_t^0(\sqrt{a(t-t_2)}/d) \right\} \quad t > t_2 \tag{10.23}$$

For large times the approximation (10.4) can be used. This gives the following simple formula for the heat loss for large times:

$$Q(t) \approx -\lambda T_2 L_e \cdot \frac{1}{2\pi} \ln\left(\frac{t}{t-t_2}\right) \tag{10.24}$$

The formula is valid if the conditions (7.8) and (10.4) are satisfied:

$$\sqrt{a(t-t_2)} > 2d \qquad \sqrt{at} < L_{min}/2 \tag{10.25}$$

This gives both a lower and an upper limit. Sometimes these conditions are never satisfied.

In order to treat the case with very large times, we must leave the edge approximation. Using (2.6) with $t_a = 0$ we get the following formula for the accumulated heat loss due to a single pulse:

$$E(t) = \int_0^t Q_t(t'')\,dt'' - \int_{t_2}^t Q_t(t''-t_2)\,dt'' \qquad t > t_2 \tag{10.26}$$

Here $Q_t(t)$ gives the heat loss due to a temperature step T_2 starting at time zero. We get the following formula:

$$E(t) = \int_{t-t_2}^t Q_t(t'')\,dt'' \tag{10.27}$$

We know that the heat loss $Q_t(t)$ tends to the steady state heat loss Q_s for large times. The steady-state heat loss is taken for the same temperature difference between the indoor and the outdoor temperature as the temperature step ($T_i - T_0 \rightarrow 0 - T_2$). This gives:

$$t \rightarrow \infty \qquad E(t) \rightarrow \int_{t-t_2}^t Q_s\,dt'' = Q_s \cdot t_2 \tag{10.28}$$

Thus the total accumulated heat loss for a temperature pulse is obtained by taking the corresponding steady-state heat loss during the time period t_2. We get the following general formula:

$$E(\infty) = Q_s \cdot t_2 \qquad \text{(temperature pulse)} \tag{10.29}$$

The steady-state heat loss is scaled according to (8.2). Here we replace $T_i - T_0$ with $-T_2$. We get:

$$E(\infty) = -\lambda T_2 L_s \cdot h_s \cdot t_2 \qquad \text{(temperature pulse)} \tag{10.30}$$

Figure 10.5 shows how the heat loss h_t approaches the steady-state heat loss factor when t tends to infinity. According to the numerical examples it takes about one year before h_t can be approximated by h_s for a slab of the dimension of 10 m. For Reference case C (15·30 m^2) it takes about five years. An important thing to consider is that a part of the heat loss due

to a temperature pulse does not occur during the heating season.

Example 10.5:

Data from reference cases A,B and C will be used. A cold spell with $T_2 = -15\,^\circ$ C starts at $t = t_1 = 0$ and stops at $t = t_2 = 7$ days. The perimeter length is:

$L_e = 40$ m case A,B
$L_e = 90$ m case C

The time variable τ is calculated in Example 10.1. The time in days is denoted by t_d. We have:

$\tau = \sqrt{t_d/139}$ case A,B
$\tau = \sqrt{t_d/556}$ case C

The heat loss q_t is given in Example 10.1. For the cold spell the heat loss is given by $L_e \cdot q_t$ for times less than 7 days. For times larger than 7 days, the heat loss for case A is given by (10.23):

$$Q(t) = 1.5 \cdot 15 \cdot 40 \left\{ h_t^0(\sqrt{t_d/139}) - h_t^0(\sqrt{(t_d - 7)/139}) \right\} \qquad \text{(W)}$$

The heat loss $Q(t)$ is given for a few times in the following table:

	t (days)	0	1	2	4	7	8	14	50
$Q(t)$ (W)	case A	0	41	57	79	101	66	36	13
	case B	0	20	30	39	52	37	23	8
	case C	0	92	128	177	225	148	81	29

The heat loss due to the cold spell for case A is shown in Figure 1.6 by the dashed curve. It is superimposed on the steady-state heat loss and the periodic heat loss. The steady-state heat loss and the maximum periodic heat loss for case A are: $Q_s = 427$ W and $(Q_p)_{max}$=144 W, respectively. These numbers show that the heat loss due to the cold spell is rather small, but it cannot be neglected.

Example 10.6:

The heat loss is given for three pulses with varying duration in the table below. We have $t_2 = 1, 7$ and 30 days for case A and $T_2 = -15\,°C$.

$t_2 = 1$ day

t days	0	0.5	1	2	4	7	14
$Q(t)$ (W)	0	29	41	16	9	6	4

$t_2 = 1$ week

t days	0	1	2	4	7	8	14	50
$Q(t)$ (W)	0	41	57	79	101	66	36	13

$t_2 = 1$ month

t days	0	15	30	45	60	90	120
$Q(t)$ (W)	0	141	186	79	60	37	31

The example shows that pulses with a duration of about one day can be neglected.

Example 10.7:

The heat loss for the pulses in Example 10.6 decreases when there is snow on the ground. Consider the following data:

$d_{snow} = 0.15$ m $\qquad \lambda_{snow} = 0.15$ W/mK

The ratio between the equivalent insulation thickness of the snow and the slab is:

$d_1/d = 0.5$

The heat loss factor is obtained from Figure 10.4. We get for the three pulses:

$t_2 = 1$ day

t days	0	0.5	1	2	4	7	14
$Q(t)$ (W)	0	1.9	3.6	3.2	2.8	2.0	1.8

$t_2 = 1$ week

t days	0	1	2	4	7	8	14	50
$Q(t)$ (W)	0	4	7	12	20	19	15	8

$t_2 = 1$ month

t days	0	15	30	45	60	90	120
$Q(t)$ (W)	0	37	59	45	42	23	21

The snow reduces the heat loss strongly. The maximum heat loss is reduced to a third or less for pulses with a duration up to a month. For a snow depth of thickness 1 dm or more the heat loss due to a cold spell, with a duration less than a month, can be neglected.

Chapter 11

THERMAL BUILD-UP

During the first few years of a new building there is a thermal build-up of a warm region below the foundation. The heat loss for this transient process will be treated in this chapter.

Figure 4.7 shows the thermal build-up problem. The temperature above the slab insulation is T_i for $t > 0$. We simplify the process by neglecting the temperature variation at the ground surface during the year. Thus the ground surface temperature is T_0. The temperature variations in the initial ground temperature are neglected. We have a constant temperature T_0 in the ground at $t = 0$.

The heat loss for the thermal build-up is denoted by $Q_{tb}(t)$ (W). For the two-dimensional case it is denoted by $q_{tb}(t)$ (W/m).

The temperature in the ground gradually approaches the steady-state temperature field. This means that Q_{tb} approaches Q_s, when the time tends towards infinity:

$$Q_{tb}(t) \rightarrow Q_s \qquad t \rightarrow \infty \tag{11.1}$$

The thermal build-up heat loss is always larger than the steady-state heat loss. The difference in the heat losses, $Q_{tb}(t) - Q_s$, is expended for the thermal build-up. The *accumulated thermal build-up* is in accordance with (5.35) given by:

$$E_{tb}(t) = \int_0^t (Q_{tb}(t') - Q_s)\ dt' \qquad \text{(J)} \tag{11.2}$$

11.1 HEAT LOSS FOR A RECTANGULAR SLAB

The scaling rules of the heat loss $Q_{tb}(t)$ for the thermal build-up process is treated in Section 5.3. For a rectangular slab with constant equivalent insulation thickness d we get from (5.31-32):

$$Q_{tb}(t) = \lambda(T_i - T_0)L \cdot h_{tb}(\sqrt{at}/B, L/B, d/B) \tag{11.3}$$

The non-dimensional heat loss factor h_{tb} is a function of the time variable $\sqrt{at}/B$, and two parameters L/B and d/B. It has been calculated numerically for some values of the parameters ($d/B = 0.1, 0.3, 0.6$ and $L/B = 1, 1.5, 2, \infty$). The result is given in Table 11.1.

For large times Q_{tb} approaches the steady-state heat loss Q_s, (11.1). For the heat loss factor this means that h_{tb} approaches the steady-state heat loss factor h_s. In accordance with (5.33) we get:

$$h_{tb}(\infty, L/B, d/B) = h_s(L/B, d/B) \tag{11.4}$$

The function h_s is given in Figure 8.2.

At the starting time the temperature under the slab is T_0. The heat loss at time zero becomes:

$$Q_{tb}(0) = \frac{\lambda_i(T_i - T_0)}{d_i} \cdot LB = \frac{\lambda(T_i - T_0)}{d} \cdot LB \tag{11.5}$$

The heat loss factor at time zero becomes:

$$h_{tb}(0, L/B, d/B) = \frac{1}{d/B} \tag{11.6}$$

		at/B^2=0	0.019	0.038	0.076	0.151	0.302	∞
	L/B=1	10.0	4.21	3.74	3.44	3.28	3.22	3.21
$d/B = 0.1$	1.5	10.0	4.08	3.56	3.21	3.02	2.92	2.89
	2	10.0	4.02	3.47	3.10	2.88	2.77	2.72
	∞	10.0	3.91	3.29	2.84	2.56	2.40	2.28

		at/B^2=0	0.019	0.038	0.076	0.151	0.302	∞
	L/B=1	3.33	2.31	2.14	2.02	1.94	1.90	1.88
$d/B = 0.3$	1.5	3.33	2.28	2.09	1.94	1.84	1.79	1.78
	2	3.33	2.26	2.07	1.90	1.79	1.72	1.70
	∞	3.33	2.24	2.02	1.82	1.67	1.57	1.51

		at/B^2=0	0.019	0.038	0.076	0.151	0.302	∞
	L/B=1	1.67	1.37	1.31	1.25	1.22	1.20	1.16
$d/B = 0.6$	1.5	1.67	1.36	1.29	1.23	1.18	1.15	1.11
	2	1.67	1.35	1.28	1.21	1.16	1.13	1.08
	∞	1.67	1.35	1.26	1.18	1.11	1.06	1.02

Table 11.1: The thermal build-up heat loss factor h_{tb} for a rectangular slab on the ground.

The accumulated heat loss that exceeds the steady-state heat loss is denoted $E_{tb}(t)$, (11.2). For a rectangular slab with constant equivalent insulation thickness d, and $d_1 = 0$, we get from (5.27) and (5.39):

$$E_{tb}(t) = C(T_i - T_0)LB^2 \cdot e_{tb}(\sqrt{at}/B, L/B, d/B) \tag{11.7}$$

Here we have used LB^2 as volume factor instead of L_s^3. The scale factor $C(T_i - T_0)LB^2$ (J) is the heat content for a ground volume $L \cdot B \cdot B$ for a temperature interval $T_i - T_0$. The non-dimensional factor for the accumulated heat loss e_{tb} is given in Table 11.2 for the same set of parameters as for h_t in Table 11.1.

Example 11.1:

For reference case A we have:

$d = 3$ m $\quad \lambda(T_i - T_0)L = 270$ W
$L/B = 1.5 \quad d/B = 0.375$

		at/B^2=0	0.019	0.038	0.076	0.151	0.302
	L/B=1	0	0.037	0.051	0.064	0.074	0.079
$d/B = 0.1$	1.5	0	0.041	0.058	0.076	0.091	0.101
	2	0	0.044	0.062	0.082	0.101	0.115
	∞	0	0.052	0.076	0.104	0.134	0.161

		at/B^2=0	0.019	0.038	0.076	0.151	0.302
	L/B=1	0	0.012	0.018	0.025	0.030	0.032
$d/B = 0.3$	1.5	0	0.014	0.022	0.030	0.037	0.040
	2	0	0.015	0.023	0.032	0.041	0.044
	∞	0	0.019	0.030	0.045	0.062	0.077

		at/B^2=0	0.019	0.038	0.076	0.151	0.302
	L/B=1	0	0.005	0.007	0.010	0.012	0.014
$d/B = 0.6$	1.5	0	0.006	0.009	0.012	0.016	0.018
	2	0	0.006	0.009	0.013	0.017	0.019
	∞	0	0.008	0.013	0.021	0.030	0.039

Table 11.2: The non-dimensional factor e_{tb} for the accumulated heat loss, (11.7), for the thermal build-up under a rectangular slab on the ground.

The value $L/B = 1.5$ occurs in Table 11.1. For $d/B = 0.375$ we have to interpolate between $d/B = 0.3$ and $d/B = 0.6$:

$(0.6 - 0.375)/(0.6 - 0.3) = \frac{3}{4}$ of the case d/B =0.3

$(0.375 - 0.3)/(0.6 - 0.3) = \frac{1}{4}$ of the case d/B =0.6

Let t_d denote one day:

t_d=1 day $at_d/B^2 = 0.75 \cdot 10^{-6} \cdot 3600 \cdot 24/64 = 0.00101$

The value for the heat loss factor at infinite time is obtained from Table 11.1:

$h_{tb}(\infty, 1.5, 0.375) \approx 1.78 \cdot 3/4 + 1.11 \cdot 1/4 = 1.61$

This is in good agreement with the value of h_s obtained from Figure 8.2 and Example 8.1. At time $t = 0$ the heat loss factor is obtained from (11.6):

$h_{tb}(0, 1.5, 0.375) = 8/3 = 2.67$

After 19 days we get:

$h_{tb}(0.019, 1.5, 0.375) \approx 2.28 \cdot 3/4 + 1.36 \cdot 1/4 = 2.05$

We get the heat loss from (11.3):

$Q_{tb} = 270 \cdot 2.05 = 554$ W

This can be compared with the steady-state heat loss:

$Q_{tb}(\infty) = Q_s \approx 270 \cdot 1.61 = 435$ W

The following table gives the heat loss for a few times:

t (days)	0	19	38	76	151	302	∞
$Q_{tb}(t)$ (W)	720	554	510	476	452	440	435

From (11.7) we get the accumulated heat loss that exceeds the steady-state heat loss. The data for reference case A give:

$C(T_i - T_0)LB^2 = 2 \cdot 10^6 \cdot 15 \cdot 12 \cdot 8^2$ J=6400 kWh

For example, after 38 days we get:

$e_{tb}(0.038, 1.5, 0.375) \approx 0.022 \cdot 3/4 + 0.009 \cdot 1/4 = 0.019$
$E_{tb}(38t_d) = 6400 \cdot 0.019 = 120$ kWh

This can be compared with the accumulated steady-state heat loss:

$E_s = Q_s \cdot t = 435 \cdot 38 \cdot 3600 \cdot 24$ J=397 kWh

The following table gives E_{tb} and $E_s = Q_s \cdot t$ for a few times:

t (days)	0	19	38	76	151	302
$E_{tb}(t)$ (kWh)	0	77	120	163	203	221
$Q_s \cdot t$ (kWh)	0	198	397	793	1576	3150

Example 11.2:

For reference case C we have the following data:

$d = 3$ m $\quad \lambda(T_i - T_0)L = 675$ W
$L/B = 2 \quad d/B = 0.2$

The heat loss factor for $L/B = 1.5$ is given in Table 11.1. For $d/B = 0.2$ we have to interpolate between $d/B = 0.1$ and $d/B = 0.3$.

For the time scaling we have:

$at_d/B^2 = 0.75 \cdot 10^{-6} \cdot 3600 \cdot 24/225 = 0.00029$

For example, after the time 0.019/0.00029=66 days we get from Table 11.1:

$h_{tb} \approx 4.02/2 + 2.26/2 = 3.14$
$Q_{tb} = 2120$ W

This can be compared with the steady-state heat loss:

$h_s = h_{tb}(\infty) \approx 2.72/2 + 1.70/2 = 2.21$
$Q_s = Q_{tb}(\infty) = 1490$ W

The following table gives Q_{tb}, E_{tb} and $E_s = Q_s \cdot t$ for a few times:

t (days)	0	66	130	260	520	1040	∞
Q_{tb} (W)	3375	2120	1870	1687	1576	1515	1490
E_{tb} (kWh)	0	1660	2390	3200	3990	4470	-
$Q_s \cdot t$ (kWh)	0	2360	4650	9300	18600	37200	∞

Examples 11.1-2 show that the heat loss expended for the thermal build-up process is rather small compared with the steady-state heat loss. For reference case A, E_{tb} is about 10 % of the steady-state heat loss after the first year. For the large slab of reference case C, the corresponding figure is 20%.

The above results show that the extra heat loss due to the thermal build-up can normally be neglected.

11.2 HEAT LOSS FOR SHORT TIMES

11.2.1 ONE-DIMENSIONAL APPROXIMATION

The indoor temperature step process at the edge of a slab was studied in Section 6.3.2. It was shown that the temperature field was approximately one-dimensional at a distance of $\sqrt{at}$ or more from the edge. The temperature is given by Formula (6.25). It depends on the variable $z/\sqrt{at}$ and the parameter $d/\sqrt{at}$ only.

The one-dimensional heat flow due to a temperature step above the insulation is given by (2.4) and (6.25):

$$q_{n0}(t) = \frac{\lambda(T_i - T_0)}{d} \cdot \mathrm{f}(\sqrt{at}/d) \qquad (\mathrm{W/m^2}) \tag{11.8}$$

$$\mathrm{f}(\tau) = e^{\tau^2} \cdot \mathrm{erfc}(\tau) \tag{11.9}$$

The function f is shown in Figure 11.1. The following approximation gives an error of less than 1%:

$$e^{\tau^2} \cdot \mathrm{erfc}(\tau) \approx \frac{2+\tau}{2 + (1 + 4/\sqrt{\pi})\tau + \sqrt{\pi} \cdot \tau^2} \qquad 0 \le \tau < \infty \tag{11.10}$$

The heat loss $Q_{tb}(t)$ can be approximated by the one-dimensional heat flow for short times. For a slab with the area A we get:

$$Q_{tb}(t) \approx A \cdot q_{n0}(t) \qquad (\text{small } t) \tag{11.11}$$

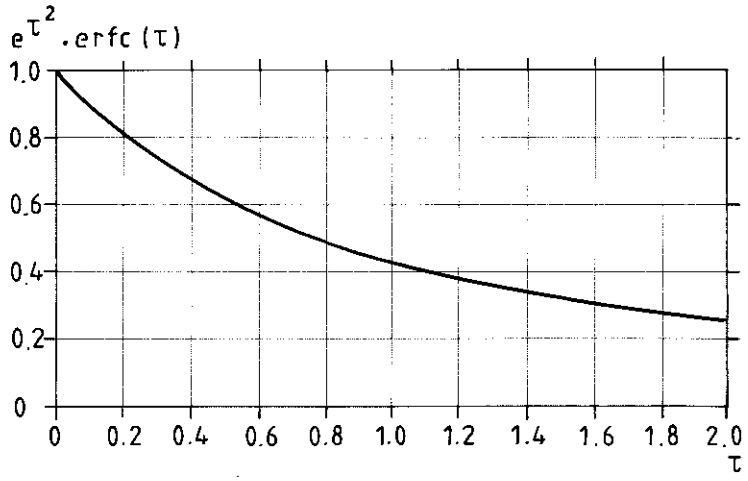

Figure 11.1: The function (11.9) which gives the one-dimensional heat loss according to (11.8).

This approximation is improved in the next section by taken the two-dimensional temperature process at the edges into consideration.

11.2.2 EDGE HEAT LOSS

At the edges of the slab the temperature process becomes, for short times, two-dimensional in a plane perpendicular to the edge line. This is the case except for the regions near the corners, where the temperature process becomes directly three-dimensional.

The two-dimensional edge temperature process is shown in Figure 11.2. The temperature in the ground at the starting time $t = 0$ is T_0. The ground surface temperature is T_0. The equivalent insulation thickness for the slab is d. The equivalent insulation thickness for the ground surface is d_1. First we treat the case $d_1 = 0$. For the edge problem the thermal insulation is extended along the whole positive x-axis. The temperature above the thermal insulation of the slab is T_i.

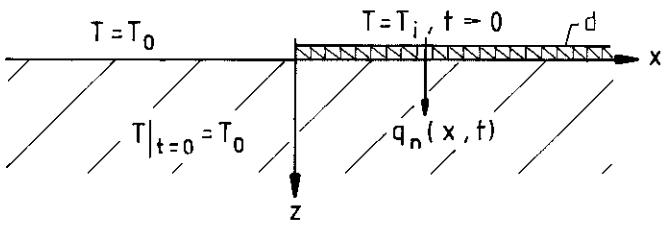

Figure 11.2: Two-dimensional edge heat loss problem for a thermal build-up.

The heat flow through the insulation is denoted by $q_n(x,t), 0 < x < \infty$. At a distance $x > \sqrt{at}$ the temperature process is approximately one-dimensional. Using (11.8) we have:

$$q_n(\infty, t) = q_{n0}(t) \tag{11.12}$$

The heat flow near the edge is larger than this one-dimensional heat flow. We obtain the extra heat flow due to the edge by integrating the difference over the positive x-axis. This integrated heat loss will be denoted by q_{tbe} (thermal build-up, edge heat loss):

$$q_{tbe}(t) = \int_0^\infty (q_n(x,t) - q_{n0}(t))\, dx \qquad \text{(W/m)} \tag{11.13}$$

The edge heat loss $q_{tbe}(t)$ has the dimension W/m. It gives the heat loss that exceeds the one-dimensional one.

The edge heat loss can be expressed by a non-dimensional heat loss factor. The scaling factor becomes equal to $\lambda(T_i - T_0)$. The problem contains only the lengths $\sqrt{at}$ and d for the case $d_1 = 0$. The heat loss factor will be a function of the non-dimensional time $\sqrt{at}/d$ only. We get:

$$q_{tbe}(t) = \lambda(T_i - T_0) \cdot h^0_{tbe}(\sqrt{at}/d) \tag{11.14}$$

The upper index 0 is used to mark that $d_1 = 0$.

An analytical expression for the heat loss factor is obtained from Formulæ 5.3.16, 5.2.12, and 5.3.13 in [1]:

$$h^0_{tbe}(\tau) = \frac{1}{\sqrt{\pi}} \int_0^\tau e^{s^2} \cdot \mathrm{erfc}(s) \cdot \left\{1 - e^{\tau^2 - s^2} \cdot \mathrm{erfc}\left(\sqrt{\tau^2 - s^2}\right)\right\} ds \quad \tau \geq 0 \tag{11.15}$$

The integral has been evaluated numerically. The result is shown in Figure 11.3 and Table 11.3. The function h^0_{tbe} is also shown in greater detail in Figure 11.4 for the interval $0 \leq \tau \leq 1$:

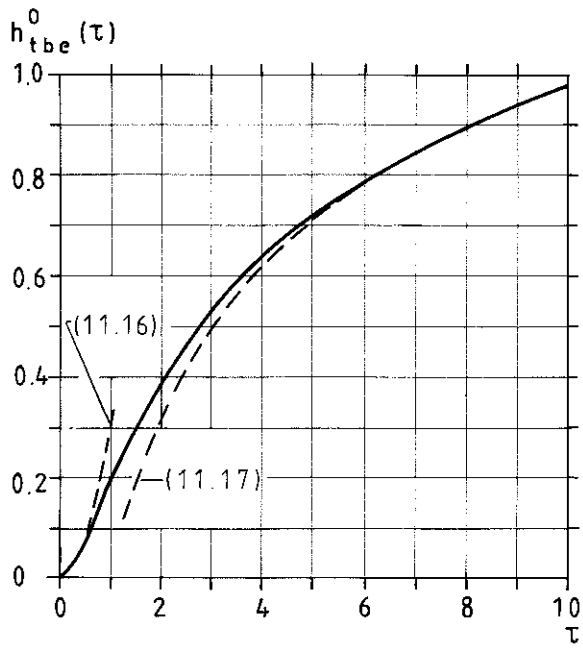

Figure 11.3: Edge heat loss factor (11.15) for an indoor temperature step (Figure 11.2).

We have the following approximation for small values of τ:

$$h^0_{tbe} \approx \tau^2(0.5 - 0.616\tau + 0.534\tau^2) \qquad \tau \leq 0.3 \tag{11.16}$$

The approximation is shown in Figure 11.3. The maximum error is less than 3% for $\tau \leq 0.3$. At $\tau = 0.45$ the error is 9%. From Formulæ 5.3.16, 5.3.21, and 5.2.19 in [1] we get an approximation for large values of τ:

τ	0	0.5	1.0	1.5	2.0	2.5	3.0	3.5
h^0_{tbe}	0	0.072	0.187	0.293	0.384	0.461	0.527	0.584
τ	4.0	4.5	5.0	6.0	7.0	8.0	9.0	10.0
h^0_{tbe}	0.634	0.678	0.718	0.787	0.844	0.894	0.941	0.974

Table 11.3: Edge heat loss factor (11.15) for an indoor temperature step (Figure 11.2).

$$h^0_{tbe} \approx \frac{1}{\pi}\left(1 - \frac{1}{\sqrt{\pi}\tau}\right)\left(\ln(2\tau) + \frac{\gamma}{2}\right) - \frac{\ln(2)}{\pi\sqrt{\pi}\cdot\tau} \qquad \tau > 3.5 \tag{11.17}$$

$$\gamma = 0.5772$$

The approximation is shown in Figure 11.3. The maximum error is 4% for $\tau > 3.5$. At $\tau = 2.4$ the error is 10 %.

The case with a thermal resistance at the ground surface ($d_1 > 0$) is also treated in [1]. The edge heat loss factor is then a function of $\sqrt{at}/d$ and d_1/d. Formula 11.14 is replaced by:

$$q_{tbe}(t) = \lambda(T_i - T_0) \cdot h^1_{tbe}(\sqrt{at}/d, d_1/d) \tag{11.18}$$

The analytical expression for the heat loss factor is obtained from Formula 5.3.14 in [1]. The edge heat loss factor is shown in Figure 11.4.

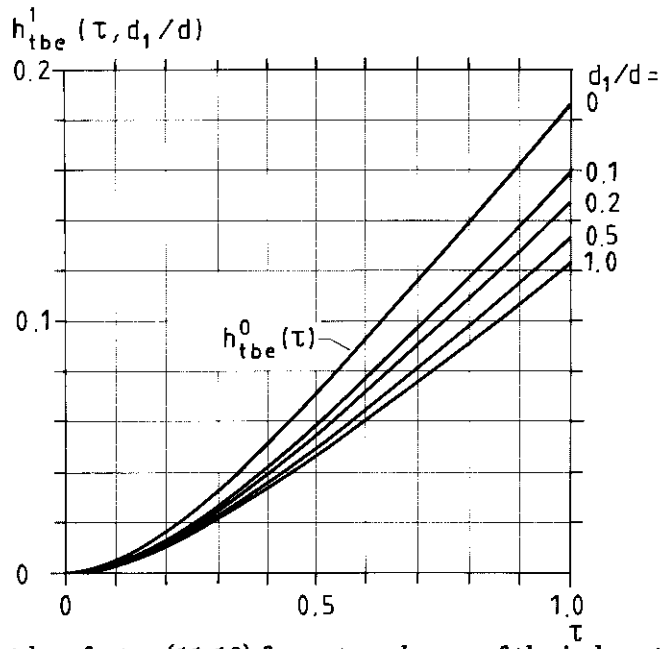

Figure 11.4: Edge heat loss factor (11.18) for a step-change of the indoor temperature (Figure 11.2). The equivalent insulation thickness at the ground surface is d_1.

We may now improve approximation (11.11) for the heat loss Q_{tb}. Let the area of the slab be denoted A and the perimeter length L_e. For short times, we get the following approximation, if the three-dimensional effect at the corners is neglected:

$$Q_{tb}(t) \approx A \cdot q_{n0}(t) + L_e \cdot q_{tbe}(t) \qquad \text{(small } t\text{)} \tag{11.19}$$

Inserting (11.8-9) and (11.14) we get the following approximation for the case $d_1 = 0$:

$$Q_{tb}(t) \approx \lambda(T_i - T_0) \cdot \left\{ \frac{A}{d} \cdot \mathrm{f}(\tau) + L_e \cdot h^0_{tbe}(\tau) \right\} \quad \tau = \sqrt{at}/d \quad \text{(short times)} \tag{11.20}$$

Here f is given by (11.9) and Figure 11.1, and h^0_{tbe} by Figure 11.3. The edge heat loss is replaced by (11.18) in the case $d_1 > 0$.

Example 11.3:

Consider reference case A. The heat loss Q_{tb} was calculated in Example 11.1 with the help of the numerically calculated values of Table 11.1. It is interesting to compare this with the approximation (11.20). We have the following data:

$\lambda(T_i - T_0) = 22.5$ W/m
$A/d = 12 \cdot 8/3 = 32$ m $\qquad L_e = 40$ m

After 19 days we have:

$t = 19 \cdot 3600 \cdot 24$ s
$\tau = \sqrt{at}/d = 0.370$
$\mathrm{f}(0.37) = 0.690$ (Figure 11.1)
$h^0_{tbe}(0.37) = 0.044$ (Figure 11.3)
$Q_{tb} \approx 22.5 \cdot \{32 \cdot 0.690 + 40 \cdot 0.044\} = 497 + 40 = 537$ W

The numerically calculated heat loss is obtained from Example 11.1:

$Q_{tb} \approx 554$ W

The agreement is very good considering that there is a certain error in the numerically calculated values. The following table gives the heat loss for a few times:

t (days)	0	19	38	70	150	302
Q_{tb} (W) Approximation 11.20	720	537	505	482	476	494
Q_{tb} (W) Numerical calculation (Ex.11.1)	720	554	510	476	452	440

The approximation (11.20) is in this case valid during, say, the first half year.

Chapter 12

VARIABLE INDOOR TEMPERATURE

This chapter treats cases with variable indoor temperature. Both the indoor step-change and periodic temperature process are dealt with.

The indoor periodic temperature problem is shown in Figure 4.4. The amplitude of the temperature is T_3 and the time period is t_3. The outdoor temperature is zero.

The indoor step-change temperature problem is shown in Figure 4.6. The indoor temperature is increased from zero to T_4 at $t = 0$. The outdoor temperature and the initial ground temperature are zero.

12.1 PERIODIC INDOOR TEMPERATURE

The temperature process at the edge of a slab was studied in Section 6.3.1. It was shown that the temperature field is approximately one-dimensional at a distance d_3 or more from the edge. Here d_3 is the periodic penetration depth for the indoor periodic temperature process, (4.49). The temperature field at the perimeter is essentially two-dimensional, except for the corners where it is three-dimensional.

The indoor periodic heat loss is denoted by Q_{pi} (W). A one-dimensional approximation for this heat loss is given in Section 12.1.1. The approximation is improved in Section 12.1.2 by taking the two-dimensional temperature process at the perimeter into account.

12.1.1 ONE-DIMENSIONAL APPROXIMATION

The one-dimensional temperature field of the inner region of the slab is given by (6.22-23). It depends on the variable z/d_3 and the parameter d/d_3. The analytical expression for the one-dimensional heat flow is obtained from (2.4) and (6.22-23):

$$q_{n0}(t) = \frac{\lambda T_3}{d} \Re/\Im \left\{ \frac{1}{1 + d_3/(d(1+i))} \cdot e^{2\pi i t/t_3} \right\} \qquad (\mathrm{W/m^2}) \tag{12.1}$$

$$= \frac{\lambda T_3}{d} \frac{1}{r_{n0}} \Re/\Im \left\{ e^{2\pi i (t/t_3 - \phi_{n0})} \right\} \tag{12.2}$$

The variables r_{n0} and ϕ_{n0} depend on d_3/d:

$$r_{n0} = \sqrt{\frac{(1 + d_3/d)^2 + 1}{2}} \tag{12.3}$$

$$\phi_{n0} = -\frac{1}{8} + \frac{1}{2\pi} \arctan\left(\frac{d}{d + d_3}\right) \tag{12.4}$$

The heat loss into the ground can be approximated by this one-dimensional heat flow, as long as the dimensions of the slab are larger than $2d_3$. For a slab with the area A we get:

$$Q_{pi}(t) \approx A \cdot q_{n0} = \lambda T_3 \frac{A}{d} \frac{1}{r_{n0}} \Re/\Im \left\{ e^{2\pi i(t/t_3 - \phi_{n0})} \right\} \tag{12.5}$$

For a sinusoidal indoor temperature $T_3 \cdot \sin(2\pi t/t_3)$, the heat loss is given by the imaginary part of (12.5):

$$Q_{pi}(t) \approx \lambda T_3 \frac{A}{d} \frac{1}{r_{n0}} \sin(2\pi(t/t_3 - \phi_{n0})) \tag{12.6}$$

12.1.2 EDGE HEAT LOSS

The temperature problem at the edge of a slab is shown in Figure 12.1 for the case $d_1 = 0$. The thermal insulation is extended to the whole positive x-axis. This two-dimensional temperature problem is also studied in Section 6.3.1.

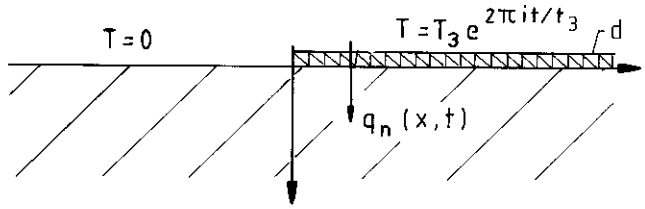

Figure 12.1: Two-dimensional temperature problem at the edge of a slab with a periodic indoor temperature.

The heat flow through the insulation is denoted by $q_n(x,t), 0 < x < \infty$. At a distance $x > d_3$ the temperature process is approximately one-dimensional. With (12.1) we have:

$$q_n(\infty, t) = q_{n0}(t) \qquad (\mathrm{W/m^2}) \tag{12.7}$$

The heat flow near the edge is larger than this one-dimensional heat flow. We obtain the extra heat flow due to the edge by integrating the difference over the positive x-axis. This integrated heat loss will be denoted q_{pe} (periodic edge heat loss):

$$q_{pe}(t) = \int_0^\infty (q_n(x,t) - q_{n0}(t))\, dx \qquad (\mathrm{W/m}) \tag{12.8}$$

The edge heat loss $q_{pe}(t)$ has the dimension W/m. It gives the heat loss that exceeds the one-dimensional one.

The edge heat loss can be expressed by a non-dimensional *edge heat loss factor*. The multiplicative scaling factor is λT_3. The problem contains only the lengths d_3 and d for the case $d_1 = 0$. Thus we get:

$$q_{pe}(t) = \lambda T_3 \cdot \Re/\Im \left\{ h_{pe}^0(d/d_3) \cdot e^{2\pi i t/t_3} \right\} \tag{12.9}$$

The upper index 0 is used to mark that $d_1 = 0$.

From Formula 4.9 (with $d_0 = d_3$ and $d_1 = 0$) in [1] we get the following analytical formula:

$$h_{pe}^0 = h_p^0(d/d_3) \cdot \frac{d_3}{d(1+i) + d_3} \tag{12.10}$$

The function h_p^0 is given in Section 9.1. It is the basic heat loss factor for the case with periodic outdoor temperature.

The heat loss factor h_{pe}^0 can be expressed by its absolute value and phase:

$$h_{pe}^0 = |h_p^0| \cdot \frac{1}{r_0} \cdot e^{-2\pi i(\phi_p^0 + \phi_0)} \tag{12.11}$$

The functions r_0 and ϕ_0 depends on d/d_3:

$$r_0 = \sqrt{(1 + d/d_3)^2 + (d/d_3)^2} \tag{12.12}$$

$$\phi_0 = \frac{1}{2\pi} \arctan\left(\frac{d}{d + d_3}\right) \tag{12.13}$$

The function r_0 tends to 1 and ϕ_0 tends to 0, as d tends to zero. This means that h_{pe}^0 tends to h_p^0 for thin insulations. The functions $|h_p^0|$ and ϕ_p^0 are known from Section 9.1 and Figure 9.3. For a sinusoidal temperature variation above the insulation we get the heat loss from the imaginary part of (12.9) with (12.11) inserted:

$$q_{pe}(t) = \lambda T_3 \cdot |h_p^0| \frac{1}{r_0} \cdot \sin(2\pi(t/t_3 - \phi_p^0 - \phi_0)) \tag{12.14}$$

The case with a thermal resistance at the ground surface ($d_1 > 0$) is also treated in [1]. Another length arises, and the heat loss factor depends on two variables:

$$q_{pe}(t) = \lambda T_3 \cdot \Re/\Im \left\{ h_{pe}^1(d/d_3, d_1/d) \cdot e^{2\pi i t/t_3} \right\} \tag{12.15}$$

The edge heat loss factor h_{pe}^1 is related to the outdoor periodic heat loss factor h_p^1. From Formula 4.9 (with $d_0 = d_3$) in [1] we get:

$$h_{pe}^1 = \frac{d_1(1+i) + d_3}{d(1+i) + d_3} \cdot h_p^1(d/d_3, d_1/d) = |h_p^1| \cdot \frac{1}{r_1} \cdot e^{-2\pi i(\phi_p^1 + \phi_1)} \tag{12.16}$$

The functions r_1 and ϕ_1 depend on d/d_3 and d_1/d_3:

$$r_1 = \sqrt{\frac{(d + d_3)^2 + d^2}{(d_1 + d_3)^2 + d_1^2}} \tag{12.17}$$

$$\phi_1 = \frac{1}{2\pi} \left(\arctan\left(\frac{d}{d_3 + d}\right) - \arctan\left(\frac{d_1}{d_3 + d_1}\right) \right) \tag{12.18}$$

The heat loss factors h_{pe}^1 and h_p^1 are equal for $d = d_1$. The functions $|h_p^1|$ and ϕ_p^1 are given in Figure 9.6.

We may now improve Formula 12.5 for the heat loss $Q_{pi}(t)$. Let the area of the slab be A and the perimeter length L_e. We get the following heat loss approximation:

$$Q_{pi}(t) \approx A \cdot q_{n0}(t) + L_e \cdot q_{pe}(t) \qquad L_{min} > 2 \cdot d_3 \tag{12.19}$$

Here L_{min} is the minimum dimension of the foundation in the horizontal plane. We may write the expression for the heat loss ($d_1 = 0$) in the following way:

$$Q_{pi}(t) \approx \lambda T_3 \cdot \Re/\Im \left\{ \frac{A}{d} \cdot \frac{1}{r_{n0}} \cdot e^{2\pi i(t/t_3 - \phi_{n0})} + L_e \cdot |h_p^0| \cdot \frac{1}{r_0} \cdot e^{2\pi i(t/t_3 - \phi_p^0 - \phi_0)} \right\} \tag{12.20}$$

Here r_{n0} and ϕ_{n0} are given by (12.3) and (12.4). The variables r_0 and ϕ_0 are given by (12.12-13). The absolute value of h_p^0 and the phase ϕ_p^0 are shown in Figure 9.3. For the case $d_1 \neq 0$

the functions $r_0, \phi_0, |h_p^0|$ and ϕ_p^0 are replaced by $r_1, \phi_1, |h_p^1|$ and ϕ_p^1 respectively.

Example 12.1:

Consider a sinusoidal indoor temperature with the amplitude $T_3 = 5\,°C$ and the time period t_3=1 week. This amplitude is quite large for ordinary indoor temperatures. For reference case A we get:

$$d = 3 \text{ m} \qquad \lambda T_3 A/d = 240 \text{ W}$$
$$d_3 = \sqrt{7 \cdot 24 \cdot 2600 \cdot 0.75 \cdot 10^{-6}/\pi} = 0.38 \text{ m}$$

The one-dimensional approximation is given by (12.6). The functions r_{n0} and ϕ_{n0} are given by (12.3-4):

$$r_{n0} = 1.07 \qquad \phi_{n0} = -0.0095$$

The approximate heat loss becomes:

$$Q_{pi}(t) \approx (240/1.07) \cdot \sin(2\pi(t/t_3 + 0.0095)) = 224 \cdot \sin(2\pi(t/t_3 + 0.0095))$$

The approximation is improved by taking the edge heat loss into account. We have for reference case A:

$$d/d_3 = 7.89 \qquad \lambda T_3 L_e = 300 \text{ W}$$

From Figure 9.3 we get:

$$|h_p^0| = 0.045 \qquad \phi_p^0 = 0.12$$

From (12.12) and (12.13) we get:

$$r_0 = 8.38 \qquad \phi_0 = 0.116$$

The edge heat loss becomes:

$$300 \cdot 0.045 \cdot (1/8.38) \cdot \sin(2\pi(t/t_3 - 0.12 - 0.116)) = 1.6 \cdot \sin(2\pi(t/t_3 - 0.24))$$

In total we get the improved approximation (12.20):

$$Q_{pi}(t) \approx 224 \cdot \sin(2\pi(t/t_3 + 0.0095)) + 1.6 \cdot \sin(2\pi(t/t_3 - 0.24)) \text{ W}$$

We see that the contribution from the edge heat loss is negligible compared with the one-dimensional heat loss approximation.

For the case t_3=1 month we get in the same way:

$$Q_{pi}(t) \approx 210 \cdot \sin(2\pi(t/t_3 + 0.019)) + 4 \cdot \sin(2\pi(t/t_3 - 0.22)) \text{ W}$$

For the case t_3=1 year we get:

$$Q_{pi}(t) \approx 158 \cdot \sin(2\pi(t/t_3 + 0.048)) + 32 \cdot \sin(2\pi(t/t_3 - 0.17)) \text{ W}$$

Here the edge heat loss is about 20 % of Q_{pi}.

These heat losses should be compared with the steady-state heat loss and the heat loss due to the outdoor periodic temperature. From Examples 8.1 and 9.1 we have the following heat losses for reference case A:

$$Q_s = 427 \text{ W}$$
$$Q_p(t) = -144 \cdot \sin(2\pi(t/t_0 - 0.094)) \text{ W} \qquad (t_0 = 1 \text{ year})$$

For this example, the heat loss due to a periodic indoor temperature ($t_3 = 1$ week, T_3=5 °C) is of the same magnitude as the steady-state and the periodic heat losses ($t_0 = 1$ year, T_1=10 °C)

Example 12.2:

Consider a sinusoidal indoor temperature $T_3 \cdot \sin(2\pi(t/t_3))$ with the amplitude $T_3 = 5\,°\text{C}$ and the time period t_3=1 week. For reference case A we have from the above example:

$$Q_{pi}(t) \approx 224 \cdot \sin(2\pi(t/t_3 + 0.01)) + 1.6 \cdot \sin(2\pi(t/t_3 - 0.24)) \text{ W}$$

For reference case B we get:

$$Q_{pi}(t) \approx 116 \cdot \sin(2\pi(t/t_3 + 0.005)) + 0.3 \cdot \sin(2\pi(t/t_3 - 0.25)) \text{ W}$$

For reference case C we get:

$$Q_{pi}(t) \approx 1050 \cdot \sin(2\pi(t/t_3 + 0.01)) + 3.6 \cdot \sin(2\pi(t/t_3 - 0.24)) \text{ W}$$

The slab of reference case B has a larger insulation thickness than case A. Case C concerns a slab with larger area than case A, but they have the same insulation thickness. The larger slab obtains a relatively smaller contribution from the edge heat loss.

The steady-state heat loss Q_s for the three cases A,B and C are 427, 262 and 1404 W, respectively. The heat loss due to the periodic indoor temperature gives a heat loss of the same magnitude as the steady-state component. It should however be noted that we have used a large amplitude for the indoor temperature. The temperature swing is 5+5=10 °C.

12.2 STEP CHANGE OF THE INDOOR TEMPERATURE

The basic indoor step-change temperature process is illustrated in Figure 4.6. The indoor temperature is T_4 for $t > 0$. The ground surface temperature and the initial ground temperature are zero. The heat loss due to an indoor temperature step is denoted by Q_{ti} (W).

This indoor temperature step process is similar to the thermal build-up process illustrated in Figure 4.7, which process was treated in Chapter 11. The indoor temperature step is $T_i - T_0$ instead of T_4. All formulæ in Chapter 11 can therefore be used.

The one-dimensional approximation of the heat loss for the slab with the area A is from (11.8) and (11.11) in Section 11.2.1:

$$Q_{ti}(t) \approx \lambda T_4 \frac{A}{d} \cdot \mathrm{f}(\sqrt{at}/d) \tag{12.21}$$

The temperature step $T_i - T_0$ has been replaced by T_4. The function f is given by (11.9) and Figure 11.1. The approximation is valid for short times.

The approximation (12.21) can be improved by taking the edge heat loss into consideration. In Section 11.2.2 the edge heat loss $q_{te} = q_{tbe}$ is given. It gives the heat loss that exceeds the one-dimensional loss. For the case $d_1 = 0$ we get from (11.14):

$$q_{te}(t) = \lambda T_4 \cdot h^0_{tbe}(\sqrt{at}/d) \qquad \text{(W/m)} \tag{12.22}$$

The upper index 0 for the heat loss factor indicates that the thermal resistance at the ground surface is zero. The heat loss factor h^0_{tbe} is given by (11.15), Figure 11.3, and Table 11.3. For the case $d_1 > 0$ we get from (11.18):

$$q_{te}(t) = \lambda T_4 \cdot h^1_{tbe}(\sqrt{at}/d, d_1/d) \qquad \text{(W/m)} \tag{12.23}$$

The edge heat loss factor is given in Figure 11.4.

Let the area of the slab be A and the perimeter length L_e. Analogous with (11.20) we get the following improved formula:

$$Q_{ti}(t) \approx \lambda T_4 \cdot \left\{ \frac{A}{d} \cdot \mathrm{f}(\tau) + L_e \cdot h^0_{tbe}(\tau) \right\} \quad \tau = \sqrt{at}/d \tag{12.24}$$

Here f is given by Figure 11.1 and h^0_{tbe} by Figure 11.3. The edge heat loss $L_e \cdot h^0_{tbe}$ is replaced by $L_e \cdot h^1_{tbe}$ for the case $d_1 > 0$.

Let us now consider a single temperature pulse for the indoor temperature. The pulse starts at time t_s and has a duration t_4. It can according to (10.21) be written as:

$$T_4 \cdot (H(t - t_s) - H(t - t_s - t_4)) \tag{12.25}$$

Heaviside's step function H is defined in (4.17). The heat loss during the pulse is given by:

$$Q(t) \approx \lambda T_4 \cdot \left\{ \frac{A}{d} \cdot \mathrm{f}(\tau) + L_e \cdot h^0_{tbe}(\tau) \right\} \quad \tau = \sqrt{a(t - t_s)}/d \quad t_s < t < t_s + t_4 \tag{12.26}$$

After the pulse we get:

$$Q(t) \approx \lambda T_4 \cdot \left\{ \frac{A}{d} \cdot (\mathrm{f}(\tau) - \mathrm{f}(\tau_1)) + L_e \cdot \left(h^0_{tbe}(\tau) - h^0_{tbe}(\tau_1) \right) \right\} \tag{12.27}$$

$$\tau = \sqrt{a(t - t_s)}/d \quad \tau_1 = \sqrt{a(t - t_s - t_4)}/d \quad t > t_s + t_4 \tag{12.28}$$

Figure 12.2 shows the temperature pulse and the heat loss for Example 12.3.

Example 12.3:

Consider a temperature pulse in the indoor temperature with the following data:

$T_4 = 5\,°\mathrm{C} \qquad t_4 = 1$ week $\qquad t_s = 0$

Remaining data are taken from reference case A. We get:

$d = 3$ m $\qquad a = 0.75 \cdot 10^{-6}$ m^2/s
$\lambda T_4 \cdot A/d = 240$ W $\qquad \lambda T_4 L_e = 300$ W

The one-dimensional heat loss approximation is given by (12.21). The function f is given in Figure 11.1. At the start time $\tau = 0$ we get f(0)=1, and the heat loss becomes:

$Q(0) = 240$ W

The edge heat loss is zero at this time. Immediately before the end of the pulse we get:

$\tau = \sqrt{0.75 \cdot 10^{-6} \cdot 7 \cdot 24 \cdot 3600}/3 = 0.22$
$\mathrm{f}(0.22) = 0.793$

The one-dimensional heat loss approximation gives:

$Q(t_4 - 0) \approx 240 \cdot 0.793 = 190.3$ W

The edge heat loss is given by the latter part of (12.26).
From Figure 11.3 we get:

$h^0_{tbe}(0.22) = 0.0188$

The edge heat loss becomes:

$300 \cdot 0.0188 = 5.6$ W

This extra heat loss is negligible in comparison with the one-dimensional contribution. Our improved approximation becomes:

$Q(t_4 - 0) \approx 196$ W

Immediately after the end of the pulse we get the heat loss:

$Q(t_4 + 0) \approx 196 - 240 = -44$ W

The temperature step with the negative amplitude $-T_4$ gives at its start ($t = t_4$) the heat loss -240 W. The negative sign means that heat flows into the building from the ground. The net effect is 44 W of heat flowing into the building. The heat has been accumulated in the ground during the pulse.

The following table gives the heat loss (12.26-27) for a few times:

t (weeks)	0	1−0	1+0	2	3	4	5
$Q(t)$ (W)	240	196	-44	-11	-6.8	-4.6	-3.3

The result is shown in Figure 12.2.

For a pulse with the duration of one month (t_4 =1 month) we get:

At the beginning of the pulse: $Q = 240$ W
At the end of the pulse: $Q \approx 151.4 + 19.7 = 171$ W
Immediately after the end of the pulse: $Q \approx -69$ W

For a pulse with the duration of one year (t_4 =1 year) we get:

At the beginning of the pulse: $Q = 240$ W
At the end of the pulse: $Q \approx 72.1 + 94.8 = 167$ W
Immediately after the end of the pulse: $Q \approx -73$ W

The first number for the heat loss at the end of the pulse gives the one-dimensional approximation, and the second one gives the edge heat loss.

Example 12.4:

Here we will study a pulse with $T_4 = 5\,°C$, t_4=1 week for reference cases A,B and C. The heat losses are given at the start time of the pulse, at the end of the pulse, and immediately after the end of the pulse.

Reference case A, according to Example 12.3:

At the beginning of the pulse: $Q = 240$ W
At the end of the pulse: $Q \approx 190.3 + 5.6 = 196$ W
Immediately after the end of the pulse: $Q \approx -44$ W

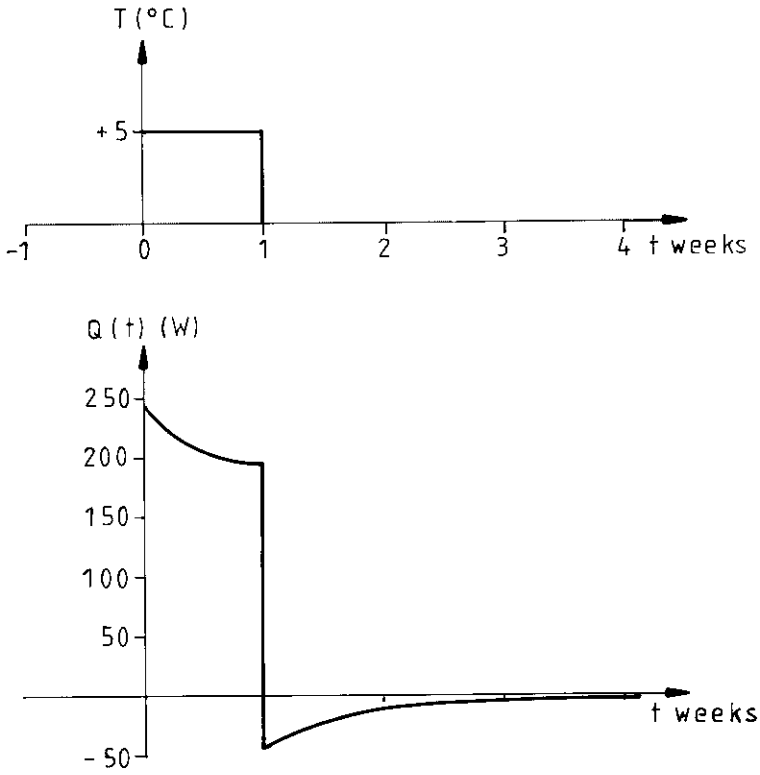

Figure 12.2: Indoor temperature pulse and corresponding heat loss for Example 12.3.

Reference case B:

At the beginning of the pulse: $Q = 120$ W
At the end of the pulse: $Q \approx 106.4 + 1.6 = 108$ W
Immediately after the end of the pulse: $Q \approx -12$ W

Reference case C:

At the beginning of the pulse: $Q = 1125$ W
At the end of the pulse: $Q \approx 892.1 + 12.3 \approx 904$ W
Immediately after the end of the pulse: $Q \approx -221$ W

For the smaller slab the edge heat loss is a relative larger part of the heat loss than for the larger slab. This is also the case for a slab with thinner insulation compared with a slab with thicker insulation and same area.

Chapter 13

DISCUSSION OF SIMPLIFICATIONS

13.1 GROUNDWATER

Flowing groundwater is often assumed to be a very important parameter in the calculation of the heat loss. For instance, the Swedish building code assumes a groundwater level 6 meters down. The groundwater temperature is assumed to be constant and equal to the annual mean outdoor temperature T_0 during the whole year. In order to study this we will consider a rather simple two-dimensional case.

We will first consider the general heat balance equation in the case with groundwater flow. The flowing groundwater gives the following convective heat flow term:

$$C_w T \vec{q}_w \qquad (\mathrm{W/m^2}) \tag{13.1}$$

Here C_w is the heat capacity of water, $4.18 \cdot 10^6$ J/m^3_wK. The groundwater flow is given by the vector $\vec{q}_w(x, y, z, t)$ (m^3_w/m^{2}s or m/s). The heat content is chosen to be zero for $T = 0$.

The convective heat flow gives an additional term in the heat balance equation (2.1):

$$C\frac{\partial T}{\partial t} = \nabla \cdot (\lambda \nabla T - C_w T \vec{q}_w) \tag{13.2}$$

We introduce a scale factor q_{w0} and a dimensionless vector $\vec{q}_w'$ for the groundwater flow:

$$\vec{q}_w = q_{w0} \cdot \vec{q}_w' \tag{13.3}$$

We consider the case with a constant thermal conductivity. Then we get from (13.2-3):

$$\frac{1}{a}\frac{\partial T}{\partial t} = \nabla \cdot (\nabla T - \frac{C_w q_{w0}}{\lambda} T \vec{q}_w') \tag{13.4}$$

A new length ℓ (m) arises in the problem:

$$\ell = \frac{\lambda}{C_w q_{w0}} \tag{13.5}$$

In the scaling of the thermal processes including groundwater flow, this length must be accounted for.

We now consider the two-dimensional steady-state case for a slab on ground shown in Figure 13.1. The depth to the groundwater table is H_w (m). The lower level of the groundwater region is assumed to be extended to $z = \infty$. This case gives a larger influence on the heat loss than a case with a groundwater region of finite depth. We consider the case with horizontal and constant groundwater flow: $\vec{q}_w = q_w \cdot \hat{x}$. Here $\hat{x}$ is a unit-vector pointing in

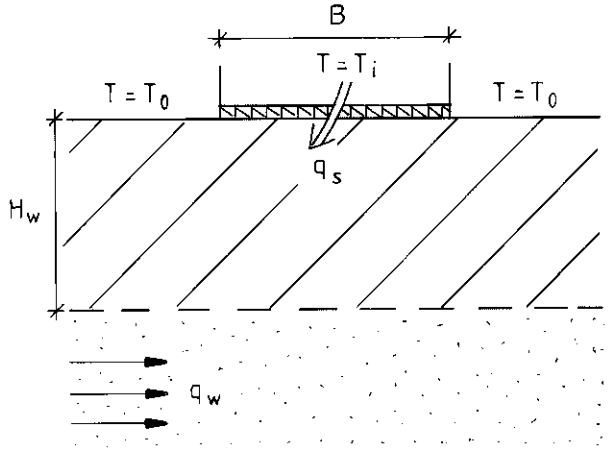

Figure 13.1: Building with a groundwater table at the depth H_w below the ground surface.

the x-direction. For simplicity, we assume that the thermal conductivity is the same in the ground above and below the groundwater table.

The groundwater flow $\vec{q}_w$ is given by Darcy's law. For our simple case, the constant groundwater flow is given by, [18]:

$$q_w = K \cdot I \tag{13.6}$$

Here K is the hydraulic conductivity in the groundwater region. The factor I (m/m) is the slope of the groundwater table. It gives the pressure drop per unit length in the flow direction.

The hydraulic conductivity varies between 10^{-11} m/s for clay and 10^{-1} m/s for gravel. The slope of the water table varies between, say, 1/1000 and 1/100. Then the groundwater flow varies between 10^{-14} and 10^{-3} m/s. The upper limit 10^{-3} m/s exists only under rather extreme conditions with high pressure gradients in coarse sand and gravel. The parameter ℓ is given by (13.5). With a ground water flow in the interval $10^{-14} < q_w < 10^{-3}$ m/s the parameter ℓ will lie in the range from 0.5 mm to $5{\cdot}10^7$ m, ($\lambda \approx 2, C_w \approx 4 \cdot 10^6$).

The steady-state heat loss problem shown Figure 13.1 depends on the two parameters d and B only, if groundwater flow is not accounted for. The heat loss factor depends on one non-dimensional parameter, $h_s(d/B)$. The heat loss factor will depend on the two additional parameters ℓ and H_w, when the groundwater is accounted for. We get:

$$q_s = \lambda(T_i - T_0) \cdot h_s(d/B, H_w/B, B/\ell) \tag{13.7}$$

For the case $H_w = \infty$ the heat loss factor is given by $h_s(d/B)$.

The heat loss has been calculated numerically for a few cases. The result of the calculation is given in Table 13.1 for different values of H_w/B and B/ℓ, while d/B is fixed to 0.1. The difference Δh_s gives the change of the heat loss factor compared with the case without groundwater flow. The reference heat loss factor $h_s(0.1)$ is given by Figure 8.11. It is equal to 2.33.

$$\Delta h_s = h_s(d/B, H_w/B, B/\ell) - h_s(d/B) \tag{13.8}$$

Consider a case with a 'normal' groundwater flow $q_w \approx 10^{-6}$ m/s. With $\lambda = 2.0$ W/mK and $B \approx 10$ m the magnitude of B/ℓ is 10. The maximum difference in heat loss is 5% for a

H_w/B	B/ℓ	Δh_s	$\Delta h_s/h_s(d/B)$
∞	-	0	0
0.9	0.0001	0	0.0
0.9	1	0.01	0.006
0.9	10	0.09	0.05
0.9	1000	0.17	0.10
0.5	10	0.20	0.11
0.5	1000	0.44	0.25
0.3	10	0.35	0.20
0.3	1000	0.88	0.49

$d/B = 0.1$

Table 13.1: The difference in heat loss factor due to groundwater flow.

groundwater table at the depth of one house width.

In general, the effect due to the *groundwater flow can be neglected for soils of low permeability* such as clay.

The figures in Table 13.1 show that the influence from the groundwater normally is small. This can be understood from the following physical interpretation. The groundwater receives heat from the ground under the house and moves downstream with higher temperature. After the water has passed the house the ground becomes colder, and the water releases the extra heat to the ground. This gives a displacement of the isotherms in the ground. It will not change the heat loss from the house in any larger extent.

13.2 FREEZING OF THE GROUND

The effect of freezing has been neglected in the previous chapters. In order to estimate the error due to this simplification, we will calculate the heat loss with a numerical model that takes into account freezing and the different thermal properties in frozen ground. The numerical model is presented in [9].

We choose a two-dimensional case in order to simplify the numerical calculation, and to get a better accuracy than a three-dimensional calculation has.

The outdoor temperature varies sinusoidally as shown by the upper curve of Figure 13.2. We take the following data:

$$\begin{array}{lll} B = 8 \text{ m} & d = 3 \text{ m} & d_1 = 0 \\ \lambda = 1.5 \text{ W/mK} & a = 0.75 \cdot 10^{-6} \text{ m}^2/\text{s} & \\ T_i = 20 \text{ °C} & T_0 = 5 \text{ °C} & T_1 = 10 \text{ °C} \\ t_0 = 1 \text{ year} & & \end{array} \tag{13.9}$$

The previously given heat loss formulæ neglect the effect of freezing. The steady-state part is given by (8.24). The periodic heat loss for an edge is given by (9.2). In the two-dimensional case we have two edges. This gives a factor 2. We get the following formula for the heat loss:

$$q(t) = \lambda(T_i - T_0) \cdot h_s(d/B) - 2\lambda T_1 \cdot |h_p^0(d/d_0)| \cdot \sin(2\pi(t/t_0 - \phi_p^0)) \quad (\text{W/m}) \tag{13.10}$$

The heat loss factors are given by Figures 8.11 and 9.3. From (13.10) with data according to (13.9) we get:

$$q(t) = 30.2 - 7.2 \cdot \sin(2\pi(t/t_0 - 0.094)) \quad \text{W/m} \tag{13.11}$$

This heat loss is shown in Figure 13.2 by the continuous curve.

The freezing of the ground depends on the thermal properties of the ground, the outdoor temperature and the heat flow from the slab. The thermal conductivity of frozen ground is denoted by λ_f (W/mK) and the heat capacity C_f (J/m^{3}K). The volumetric latent heat of the ground is denoted by L_f (J/m^3). It is determined from the water content of the ground. We take the following data:

$$\begin{aligned} \lambda_f &= 2.5 \text{ W/mK} \\ C_f &= 1.5 \cdot 10^6 \text{ J/m}^3\text{K} \\ L_f &= 225 \cdot 333 \cdot 1000 = 75 \cdot 10^6 \text{ J/m}^3 \end{aligned} \tag{13.12}$$

The water content of the ground is 225 kg per cubic meter. The calculated maximum frost depth far away from the slab becomes about 1 m. The calculated heat loss for the slab is shown by the dashed curve in Figure 13.2. The heat loss is a little larger when the freezing

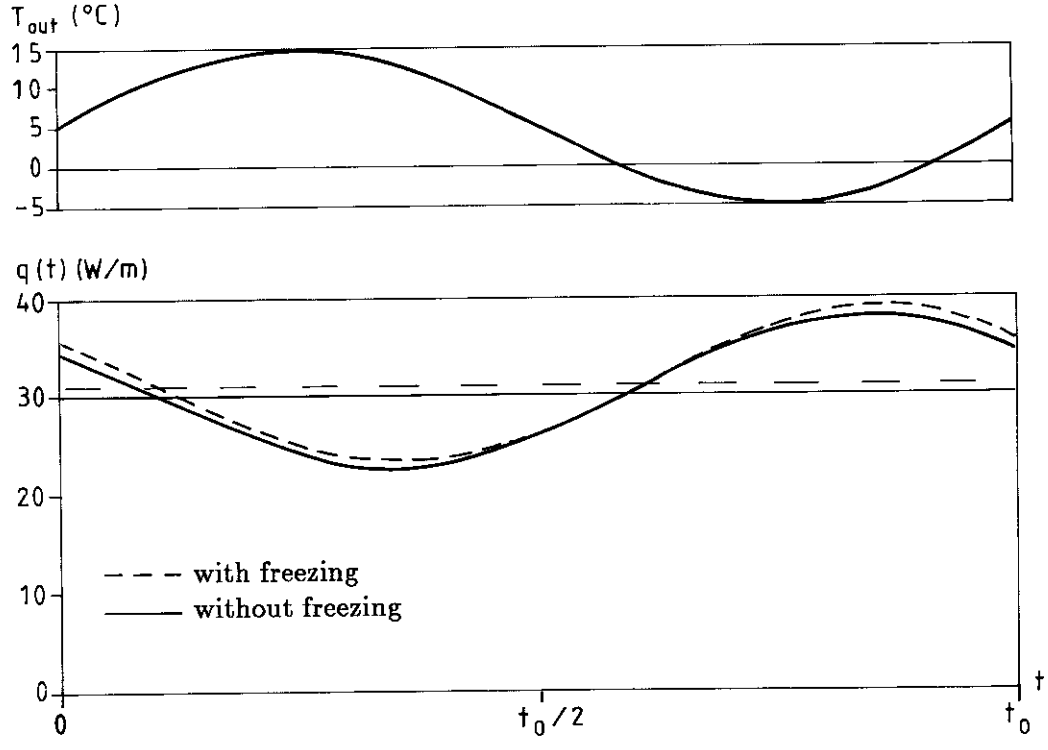

Figure 13.2: The heat loss with and without taking freezing of the ground into account. Data are given by (13.9) and (13.12). The two horizontal lines are the annual mean values of the heat loss.

of the ground is taken into account. The maximum difference is 5 %. The annual mean value is 2 % higher. The two horizontal lines show the annual mean heat loss for the two cases. The accumulated heat loss during the heating season from $t_a = 4.5/12 \cdot t_0$ to $t_b = 12.5/12 \cdot t_0$ (see Figure 15.1) becomes 4% higher when the freezing of the ground is accounted for.

The thermal conductivity is larger for frozen than for unfrozen ground. This increases the heat loss. The example shows that the error neglecting freezing is small. The heat loss is given with good accuracy by the formulæ given earlier which neglect the freezing of the ground.

13.3 SNOW

Snow on the ground acts as thermal insulation. The snow crystals build a porous structure with a lot of stagnant air. The thermal resistance for deep snow is therefore large. This effect of snow has been neglected in the previous chapters. In order to estimate the error due to this simplification the heat loss is calculated numerically for a case with snow. The outdoor temperature varies according to the top curve in Figure 13.3. We consider the same case as in (13.9) with snow during the three coldest winter months. The following snow data are used in the example:

$$\begin{aligned} d_{snow} &= 0.2 \text{ m} \qquad \text{(during three months)} \\ \lambda_{snow} &= 0.15 \text{ W/mK} \end{aligned} \tag{13.13}$$

The equivalent insulation thickness (3.22) becomes:

$$d_1 = \frac{\lambda d_{snow}}{\lambda_{snow}} = 2 \text{ m} \tag{13.14}$$

The value of d_1 during the year is shown by the middle curve in Figure 13.3.

The calculated heat loss with snow (and freezing of the ground) is shown in Figure 13.3. The heat loss, when the snow and freezing are neglected, is given by (13.11) and the continuous curve in Figure 13.3. The heat loss becomes smaller when snow is accounted for. The maximum difference is 25%. The annual mean heat loss is 12 % lower when the snow is accounted for. The accumulated heat loss during the heating season from $t_a = 4.5/12 \cdot t_0$ to $t_b = 12.5/12 \cdot t_0$ (Figure 15.1) becomes 12% lower when snow is accounted for.

Near the slab there is no freezing of the ground under the snow. Just before the first snow falls the depth of frozen ground is 1 dm. Just after the snow fall, the frozen ground thaws. For the region more than 4 meters from the slab we get a thin layer of frozen ground.

During the winter, the error due to the neglected snow is rather large. To get a higher accuracy the snow must be accounted for in some way. One idea is to use a constant thermal resistance at the ground surface during the whole year. A natural choice is to use the annual mean value of d_1:

$$d_1 = \frac{0 \cdot 9 + 2 \cdot 3}{12} = 0.5 \text{ m} \tag{13.15}$$

The annual mean value of the snow depth is used over the whole year.

If the freezing of the ground is neglected, we get an expression similar to (13.11) for the heat loss. We get:

$$q(t) = \lambda(T_i - T_0) \cdot h_s(d/B, d_1/d) - 2\lambda T_1 \cdot |h_p^1(d/d_0, d_1/d)| \cdot \sin(2\pi(t/t_0 - \phi_p^1)) \quad \text{(W/m)} \tag{13.16}$$

The heat loss factors are given in Figures 8.4 ($L/B = \infty$) and 9.6. We get the following heat loss:

$$q(t) = 27.3 - 4.9 \cdot \sin(2\pi(t/t_0 - 0.13)) \qquad \text{W/m} \tag{13.17}$$

The heat loss is shown by the continuous curve in Figure 13.4. The dashed curve is the numerically calculated heat loss shown earlier.

The maximum difference in heat loss between the two cases shown in Figure 13.4 is 10%. The difference in the annual mean heat loss is 2 %. The difference in the accumulated heat loss during the heating season is 1%.

The example shows that we get a fairly good approximation just by neglecting the snow. The accumulated heat loss during the heating season becomes 10 % too high for the example above. In order to get a better approximation, the heat loss is calculated for a ground surface

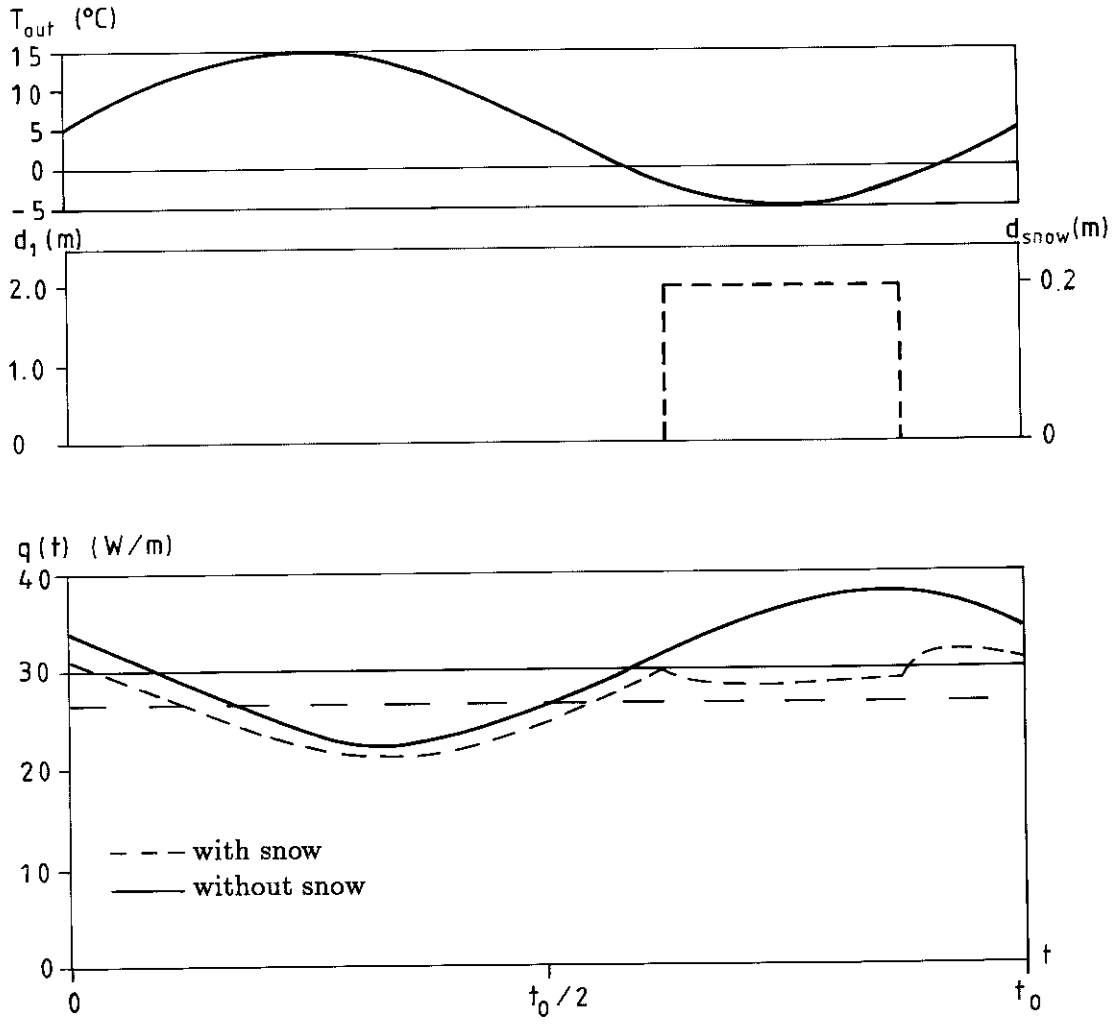

Figure 13.3: The heat loss with and without taking the snow on the ground surface into account. Data are given by (13.9),(13.12) and (13.14). The two horizontal lines give the annual mean values of the heat loss.

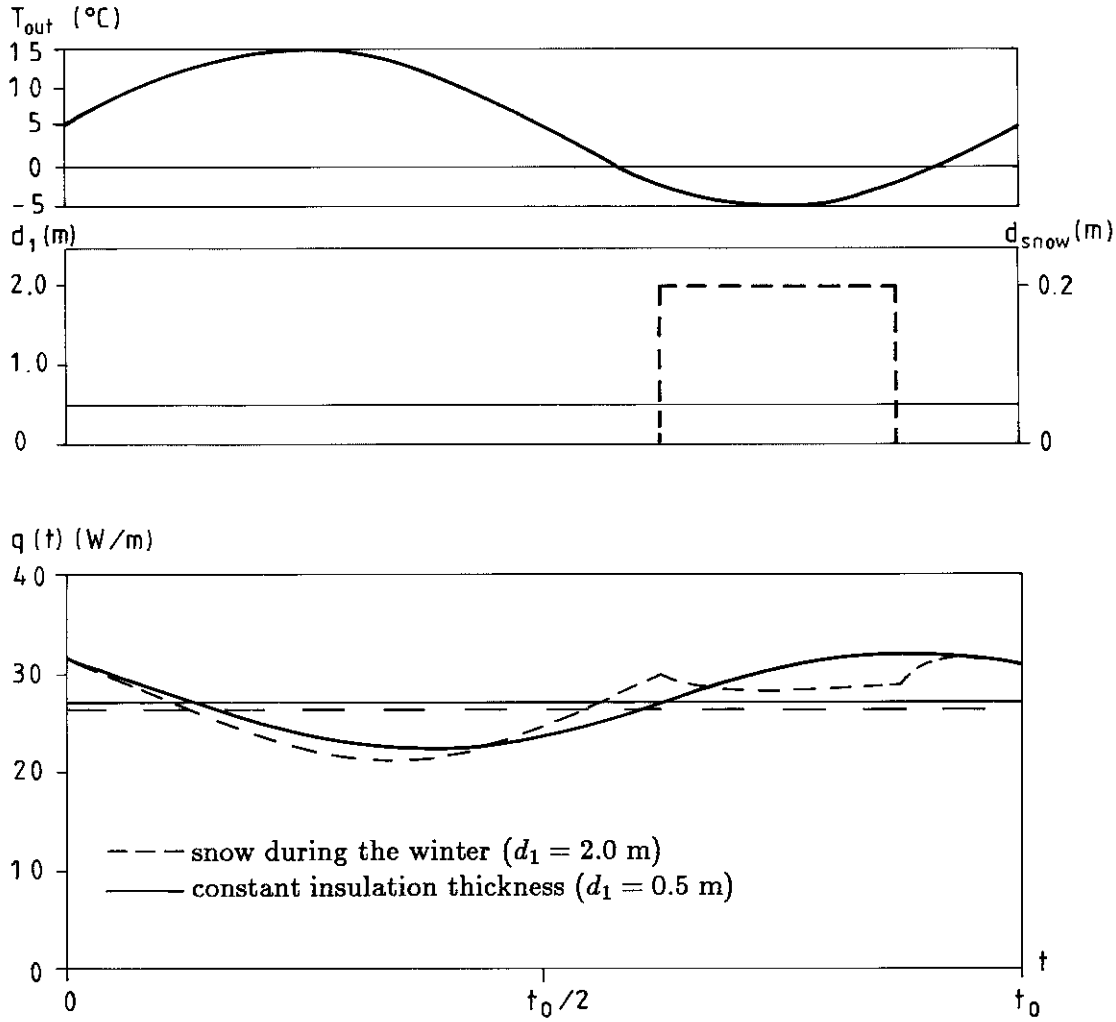

Figure 13.4: The heat loss with snow during the winter and with a constant insulation d_1 equivalent to the average snow depth during the year. Data are given by (13.9),(13.12) and (13.15). The two horizontal lines give the annual mean values of the heat losses.

with constant thermal resistance. The thermal resistance is given by the annual mean value over the year. The maximum error in the heat loss is 10 % for the example given above, while the error for the annual mean value is a few percent only.

13.4 STRATIFIED GROUND

The thermal conductivity in the ground has been constant in the cases considered so far. It is quite common that the soil consists of strata with different thermal conductivities. The difference of conductivity is considerable between soil and rock.

We will consider the two-dimensional case shown in Figure 13.5. The thermal conductivity is λ for $0 < z < H_1$, and λ_1 for $z > H_1$. The heat loss is calculated numerically. We

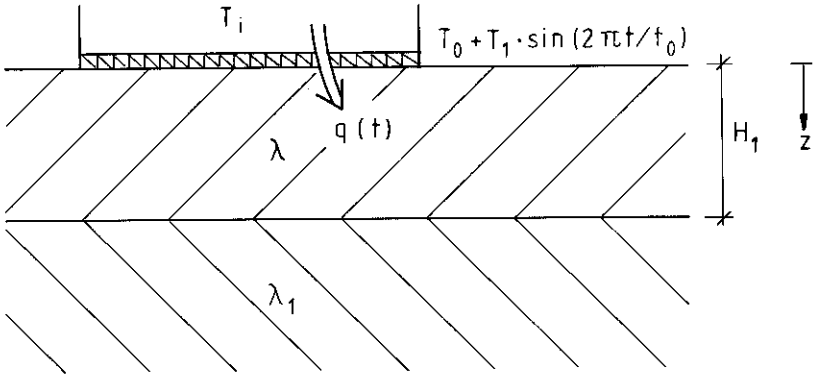

Figure 13.5: Heat loss for a slab with a ground consisting of two layers of soil with different thermal conductivities.

use the same data (13.9) as in the previous sections. The lower layer of the ground consists of granite with the thermal conductivity:

$$\lambda_1 = 3.5 \qquad \text{W/mK} \tag{13.18}$$

The heat loss is shown in Figure 13.6 for three different values of H_1. From the figure we see that the annual mean heat loss for the slab varies with H_1. The steady-state heat loss for the three cases is:

H_1 (m)	1.1	2.9	∞
q_s (W/m)	35.4	31.4	30.2

We see from Figure 13.6 that the periodic part of the heat loss is virtually independent of H_1. The different thermal conductivity at the depth H_1 does not change the periodic heat loss, since the periodic penetration of the temperature is limited.

The steady-state heat loss for a soil with constant thermal conductivity is given by (8.24):

$$q_s = \lambda(T_i - T_0) \cdot h_s(d/B) \qquad d = \frac{d_i \lambda}{\lambda_i} \tag{13.19}$$

Consider a homogeneous ground of the thermal conductivity λ_1. The steady-state heat loss for this case gives the upper limit for our slab shown in Figure 13.5. A homogeneous ground

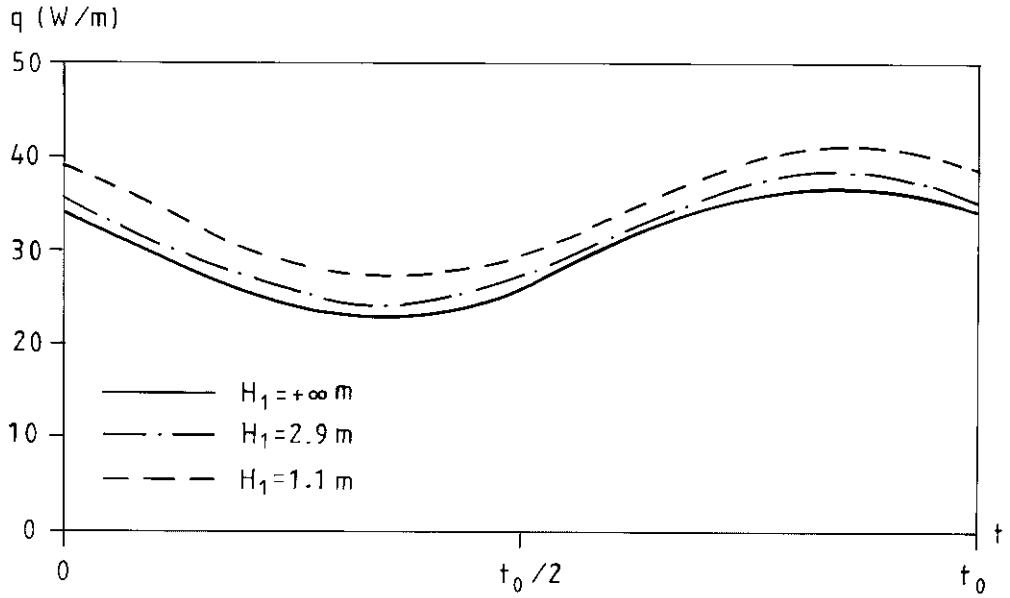

Figure 13.6: Heat loss for a slab with a ground consisting of two layers of soil with different thermal conductivities. Data from (13.9) and (13.18)

of the thermal conductivity λ gives in the same way a lower limit for the heat loss. From (13.19) and Figure 8.11 we get the interval limits for the heat loss:

$$\lambda = 1.5 \text{ W/mK:} \qquad q_s|_\lambda = 30.2 \text{ W/m} \tag{13.20}$$

$$\lambda = 3.5 \text{ W/mK:} \qquad q_s|_{\lambda_1} = 41.8 \text{ W/m} \tag{13.21}$$

The heat loss for varying H_1 may be obtained from a suitable weighing of these values. In Section 8.1 the equivalent thickness D_m of the soil was discussed. It is given by:

$$D_m = \frac{B}{h_s} - d \tag{13.22}$$

A reasonable approximation for the heat loss is obtained by a weighing of the heat loss interval limits (13.20-21) with respect to H_1 and D_m. We chose the following approximation of the heat loss for a *ground with the conductivities* λ *and* λ_1:

$$q_s \approx q_s|_\lambda \qquad H_1 > D_m$$

$$q_s \approx \frac{H_1}{D_m} \cdot q_s|_\lambda + \frac{D_m - H_1}{D_m} \cdot q_s|_{\lambda_1} \qquad H_1 < D_m \tag{13.23}$$

The equivalent soil thickness D_m is given by (13.22) using the thermal conductivity λ. The approximation (13.23) is of course possible to use for three-dimensional cases as well. The heat loss q_s is then replaced by Q_s.

Other types of weighing formulæ are of course possible. We test our approximation for the examples above. First the heat loss factor must be calculated:

$$h_s(3/8) = 1.34 \qquad D_m = \frac{8}{1.34} - 3 = 2.97 \text{ m} \tag{13.24}$$

The approximation for the heat loss becomes:

$$H_1 = 1.1 \text{ m}: \qquad q_s \approx \frac{1.1}{2.97} \cdot 30.2 + \frac{2.97 - 1.1}{2.97} \cdot 41.8 = 37.5 \text{ W/m}$$

$$H_1 = 2.9 \text{ m}: \qquad q_s \approx \frac{2.9}{2.97} \cdot 30.2 + \frac{2.97 - 2.2}{2.97} \cdot 41.8 = 30.5 \text{ W/m} \tag{13.25}$$

The error in the approximation is 3% and -6%, respectively.

13.5 SLAB WITH REINFORCED EDGES AND UNDERLYING THERMAL INSULATION

The slabs considered so far are laid directly on the ground with the thermal insulation along the ground surface. The ground under the house is described as a semi-infinite region of homogeneous material. This is of course a simplification. Concrete slabs are usually reinforced at the edges, and dug down a few decimeters. The thermal insulation can lie over or under the concrete slab. Figure 13.7 shows a slab of the latter type. The type of reinforcement of the edges may vary. We have used a rectangular type for simplicity.

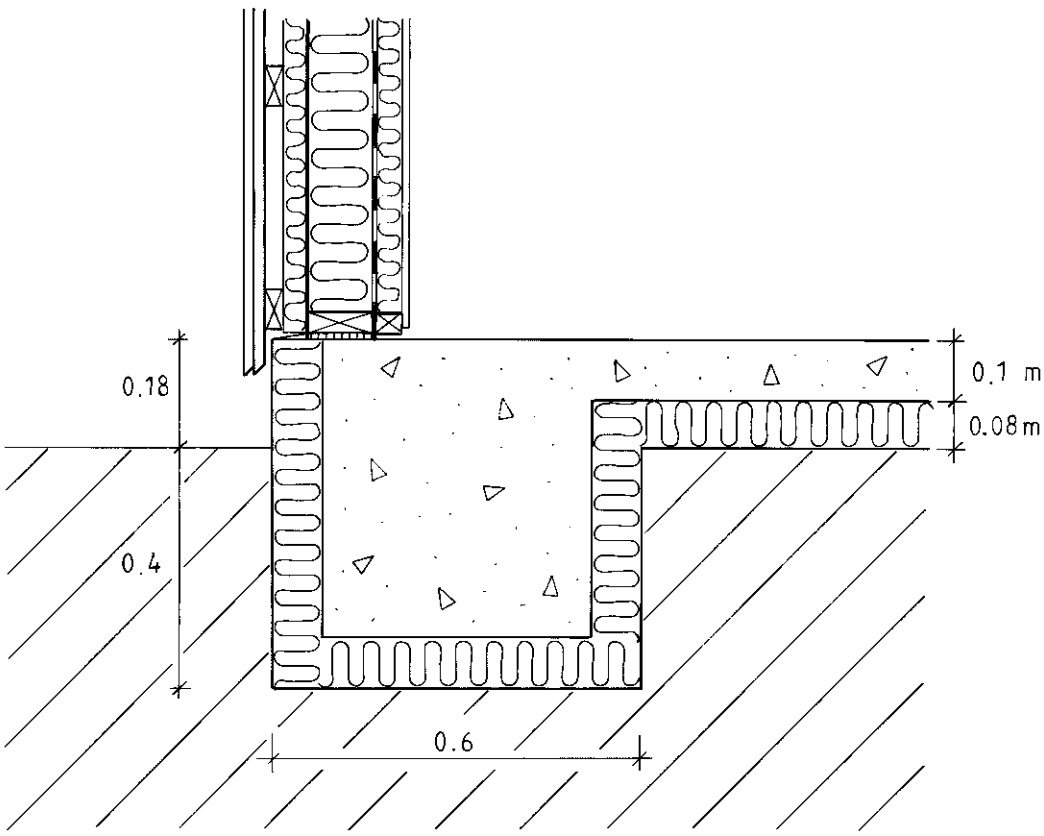

Figure 13.7: Concrete slab with reinforced edges and underlying insulation.

The underlying insulation is of mineral wool ($\lambda_i = 0.04$ W/mK) of the thickness 0.08 m. We choose the same data (13.9) as in the previous sections. The data for the reinforced edge are given in Figure 13.7. The thermal properties for the concrete are assumed to be the same as for the soil. The numerically calculated heat loss is shown by the dashed curve in Figure 13.8.

The prediction of the heat loss by our formulæ for this two-dimensional case is obtained from (13.11). It is shown in Figure 13.8 by the continuous curve.

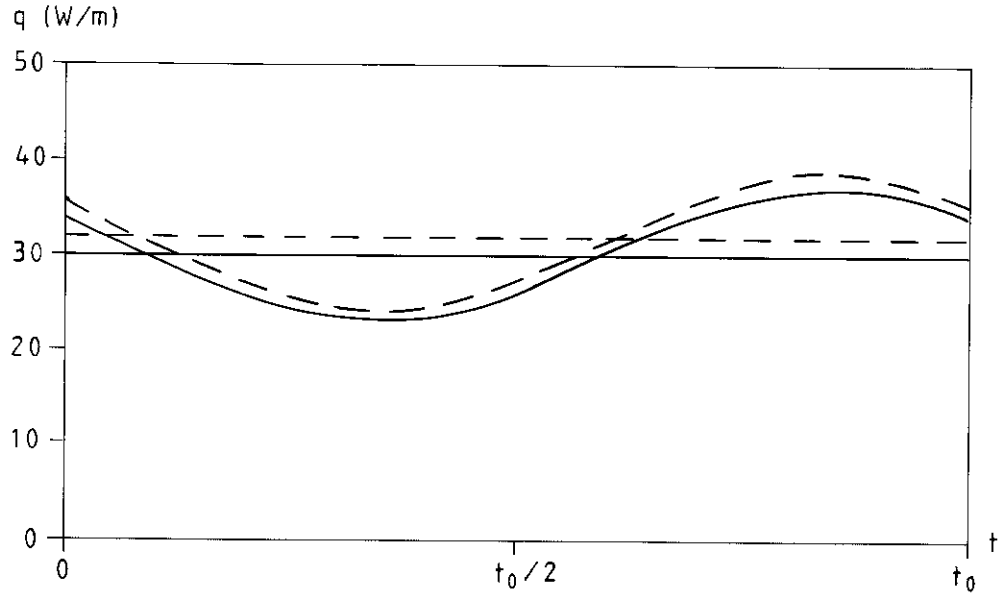

Figure 13.8: The dashed curve gives the numerically calculated heat loss for a slab with reinforced edges according to (13.9) and Figure 13.7. The continuous curve gives the heat loss according to (13.11).

The annual mean heat loss and the amplitude of the heat loss become:

	Formula 13.11	Numerical calculation
Q_s (W)	30.2	31.5
$Q_p\|_{max}$ (W)	7.2	7.4

The difference in the annual mean value is about 4%, and in the amplitude of the periodic component 3%.

Chapter 14

DESIGN RULES

The accumulated heat loss during the heating season and the peak effect are of interest in energy balance calculations for a building. Simple design rules based on the presented results are given for a slab on the ground. The basic case with a rectangular slab and constant equivalent insulation thickness is treated in detail. Some complications and the way how to handle them are discussed. The design rules are available as a PC-program. See Section 14.5. This chapter is at the same time a brief summary of the previous chapters of Part B.

14.1 OUTDOOR TEMPERATURE

The outdoor temperature determines the heat loss from the building. It may vary strongly during the day and from day to day. However it has been shown that variations with short time period or duration can be neglected. The outdoor temperature can be approximated by a simplified expression.

It should normally be sufficient to use the following approximation of the outdoor temperature for the calculation of the heat loss during the heating season:

$$T_{out}(t) = T_0 + T_1 \cdot \sin(2\pi t/t_0) \tag{14.1}$$

Here T_0 is the annual mean temperature, and T_1 is the amplitude of the sinusoidal temperature variation with the time period t_0=1 year. The function (14.1) may be determined by fitting to mean values over, for instance, every week of the year for the actual place. The temperature (14.1) is shown by the continuous curve in Figure 14.1.

The sinusoidal temperature represents a mean temperature during the winter months. In order to calculate the peak effect we need to represent the outdoor temperature in greater detail, in particular during the coldest period. It should normally be sufficient to use a single suitably chosen pulse, which starts at $t = t_1$ and ends at $t = t_1 + t_2$. The magnitude of the pulse is T_2. The value of T_2 is negative for a cold spell. The maximum heat loss is obtained at the end of the pulse. The chosen representation of the outdoor temperature is shown in Figure 14.1.

14.2 HEAT LOSS DURING HEATING SEASON

The heat loss to the ground is denoted by $Q(t)$ (W). For the outdoor temperature (14.1) we get a steady-state (time-independent) component Q_s and a periodic component $Q_p(t)$:

$$Q(t) = Q_s + Q_p(t) \tag{14.2}$$

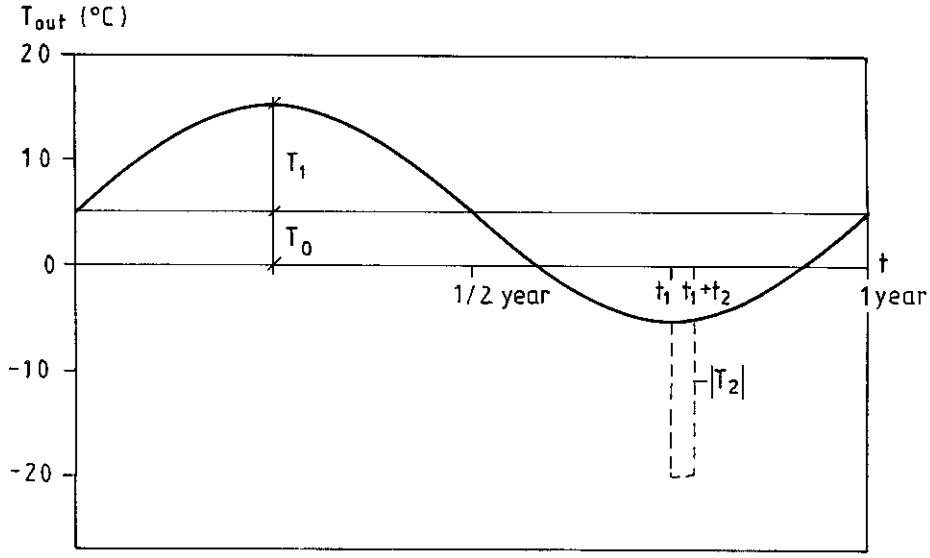

Figure 14.1: Representation of the outdoor temperature for the calculation of the energy demand (continuous curve) and the peak effect (continuous + dashed curve).

The steady-state component is treated in Chapter 8, and the periodic one in Chapter 9. For a rectangular slab with constant insulation thickness we have according to formula (8.2) for the steady-state heat loss:

$$Q_s = \lambda(T_i - T_0)L \cdot h_s(L/B, d/B) \tag{14.3}$$

Here L is the length of the slab, and B is the width. The insulation thickness is given by the equivalent length $d = \lambda d_i/\lambda_i$. See Section 3.2. The non-dimensional heat loss factor h_s is given in Figure 8.2. The periodic component is obtained from the imaginary part of (9.9):

$$Q_p(t) = -\lambda T_1 \cdot (2L + 2B) \cdot |h_p^0| \cdot \sin(2\pi(t/t_0 - \phi_p^0)) \tag{14.4}$$

The functions $|h_p^0|$ and ϕ_p^0 depend on d/d_0. They are given in Figure 9.3. The periodic penetration depth $d_0 = \sqrt{at_0/\pi}$ is discussed in Sections 4.5.2 and 6.1.1. In the formula above the thermal resistance at the ground surface is neglected ($d_1 = 0$).

Consider a heating season between the time t_a and t_b. The total heat loss E_y (year) during the heating season is given by the integral of (14.2) over the time $t_a < t < t_b$. This gives the following formula for the *accumulated heat loss during the heating season*:

$$E_y = \lambda(T_i - T_0)L \cdot h_s(L/B, d/B) \cdot (t_b - t_a) + \tag{14.5}$$
$$+ \lambda T_1(2L + 2B) \cdot |h_p^0| \cdot \frac{t_0}{2\pi} \cdot \left\{\cos(2\pi(t_b/t_0 - \phi_p^0)) - \cos(2\pi(t_a/t_0 - \phi_p^0))\right\}$$

14.3 PEAK EFFECT DURING THE WINTER

Let $Q_t(t)$ denote the heat loss due to the cold spell. The total heat loss for a temperature according to (14.1) with a superimposed cold spell as shown in Figure 14.1 becomes:

$$Q(t) = Q_s + Q_p(t) + Q_t(t) \tag{14.6}$$

The formula for $Q_t(t)$ is obtained from Section 10.3.2. For a rectangular slab we get from (10.22):

$$Q_t(t) = -\lambda T_2(2L + 2B) \cdot h_t^0 \left(\sqrt{a(t - t_1)}/d\right) \quad t_1 \leq t \leq t_1 + t_2 \tag{14.7}$$

The negative sign is due to the fact that T_2 is negative for a cold spell. The function $h_t^0(r)$ is given in Figure 10.2. The formula neglects the thermal resistance at the ground surface. The largest value for $Q_t(t)$ is obtained at the end of the cold spell: $t = t_1 + t_2$.

We choose the time $t_1 + t_2$ so that the maximum heat loss due to the cold spell coincides with the maximum of the periodic heat loss. With (14.6), (14.3-4) and (14.7) we get the following formula for the *peak effect* during the year:

$$Q(t)|_{max} = \lambda(T_i - T_0)L \cdot h_s(L/B, d/B) + \lambda T_1(2L + 2B) \cdot |h_p^0|$$
$$-\lambda T_2(2L + 2B) \cdot h_t^0 \left(\sqrt{at_2}/d\right) \tag{14.8}$$

The three functions in the formula are obtained from Figures 8.2, 9.3 and 10.2.

Figure 1.6 and Example 10.5 show that the contribution from the temperature pulse is normally quite small. A thermal resistance at the ground surface strongly reduces the heat loss $Q_t(t)$. This makes it possible to neglect the heat loss due to the pulse, if there is snow at the ground surface. The maximum heat loss is then obtained from the first two parts of formula (14.8).

$$Q(t)|_{max} = \lambda(T_i - T_0)L \cdot h_s(L/B, d/B) + \lambda T_1(2L + 2B) \cdot |h_p^0| \quad \text{(snow)} \tag{14.9}$$

14.4 COMMENTS

During the first years of a new building there is a thermal build-up of a warm region below the foundation. The heat loss for this transient thermal process is treated in Chapter 11. For small buildings the extra heat lost in raising the temperature in the ground during the first year is small. See Example 11.1. After the first year it can be neglected. For large buildings the extra heat loss must be considered during the first years. Formulæ for this heat loss are given in Chapter 11.

Formulæ for the steady-state heat loss for slabs with shapes other than the rectangular one are given in Section 8.5. The periodic heat loss is calculated according to Section 9.2. The heat loss due to a temperature step at the ground surface is calculated according to Section 10.2.

The design rules presuppose that the ground is homogeneous with constant thermal properties. Effects due to freezing of the ground and flowing groundwater are neglected. These processes are studied in Chapter 13.

There is normally a thermal resistance between the ground surface and the air. In the given formulæ a constant value for the thermal resistance is assumed. Except for the case with snow, this thermal resistance can normally be neglected for the steady-state case. Formulæ for the periodic component are given in Section 9.1, and for the temperature step in Section 10.1.3. The examples in Chapter 9 and 10 show that the periodic heat loss and the heat loss due to a cold spell are heavily damped when there is snow at the ground surface. The heat loss for a cold spell of 1 month can be neglected when there is a snow depth of 1 dm or more. The same conclusion is valid for periodic temperature variations with a time period less than one month.

If necessary, the outdoor temperature can be represented by further terms. The heat loss due to these terms is superimposed on the first heat loss approximation. The other terms may consist of further periodic temperature variations or temperature pulses. See Sections 4.3.1 and 4.3.2.

Periodic temperature variations and temperature steps may be superimposed on the constant indoor temperature T_i. These may give quite large effects if the indoor temperature swing is large. Formulæ for these heat losses are given in Chapter 12.

14.5 PC-PROGRAM FOR THE DESIGN RULES

The formulæ of the above design rules for a rectangular building with a foundation of the type slab on the ground with constant insulation thickness are available as a small PC-program described below. The program runs under MS-DOS on IBM-PC and compatible computers. The input is given interactively. The manual is given in the supplementary report [8].

The design rules assume an outdoor temperature of the type (14.1). With an arbitrary phase ϕ we get:

$$T_{out}(t) = T_0 + T_1 \cdot \sin(2\pi(t_{days}/365 - \phi)) \tag{14.10}$$

Here t_{days} is the time in days. A temperature pulse is superimposed on the outdoor temperature (14.10) during the coldest period of the winter. The magnitude of the pulse is T_2 and it has the duration t_2.

Input data

L	Length of building (m)
B	Width of building (m)
d_i	Insulation thickness (m)
λ_i	Thermal conductivity of the insulation (W/mK)
T_i	Indoor temperature (°C)
T_0	Annual mean outdoor temperature (°C)
T_1	Amplitude of the periodic outdoor temperature (°C)
λ	Thermal conductivity of the ground (W/mK)
C	Volumetric heat capacity of the ground (J/m^{3}K)
t_a	Start time for the heating season (days)
t_b	End time for the heating season (days)
T_2	Increase of outdoor temperature due to temperature pulse (°C)
t_2	Duration time for the pulse (days)

Restrictions on input data

There are the following restrictions on the input variables:

$$L, B, d_i, \lambda_i, \lambda, C, t_2 > 0 \tag{14.11}$$

$$B \leq L \tag{14.12}$$

$$\frac{d_i \lambda / \lambda_i}{B} \geq 0.05 \tag{14.13}$$

$$t_a < t_b \tag{14.14}$$

Output data

Q_s	Annual mean heat loss (W). It is given by (8.2) and Figure 8.2.
$Q_p\|_{max}$	Amplitude of the periodic heat loss (W). It is given by the absolute value of (9.9), where the absolute value of h_p is given by Figure 9.3.
ϕ_p	The phase delay, (-), for the periodic heat loss is given by Figure 9.3.
E_y	Accumulated heat loss over the heating season (J,kWh). It is given by (14.5).
$Q(t)\|_{max}$	Peak effect during the winter (W). It is given by (10.22) and Figure 10.2.

With these output data the heat loss (except for the pulse) becomes:

$$Q(t) = Q_s + Q_p|_{max} \cdot \sin(2\pi(t_{days}/365 - \phi - \phi_p)) \tag{14.15}$$

An example

Reference case A is used as a test example. Time zero corresponds to the time 00.00 on 1 of January.
Input data:

$$\begin{aligned}
L &= 12 \text{ m} \\
B &= 8 \text{ m} \\
d_i &= 0.08 \text{ m} \\
\lambda_i &= 0.04 \text{ W/mK} \\
T_i &= 20\,^\circ\text{C} \\
T_0 &= 5\,^\circ\text{C} \\
T_1 &= 10\,^\circ\text{C} \\
\lambda &= 1.5 \text{ W/mK} \\
C &= 2.0 \cdot 10^6 \text{ J/m}^3\text{K} \\
t_a &= 8.5/12 \cdot 365 = 258.5 \text{ days} \\
t_b &= (12 + 4.5)/12 \cdot 365 = 502 \text{ days} \\
T_2 &= -15^\circ\text{C} \\
t_2 &= 7 \text{ days}
\end{aligned} \tag{14.16}$$

Output data:

$$Q_s = 427 \text{ W} \tag{14.17}$$

$$Q_p|_{max} = 144 \text{ W} \tag{14.18}$$

$$\phi_p = 0.094 \tag{14.19}$$

$$E_y = 9.54 \cdot 10^9 \text{ J} = 2650 \text{ kWh} \tag{14.20}$$

$$Q(t)|_{max} = 672 \text{ W} \tag{14.21}$$

Chapter 15

EXAMPLES

15.1 TOTAL HEAT LOSS FOR THE REFERENCE CASES

The various heat loss components for the reference cases have been treated separately in the previous chapters. The results are summarized in this chapter in order to get a complete picture of the heat loss for the slabs. The reference cases are defined in Section 1.7.

We have a constant indoor temperature:

$$T_i = 20°\text{C} \tag{15.1}$$

The outdoor temperature is:

$$T_{out}(t) = 5 + 10 \cdot \sin(2\pi t/t_0) \ (°\text{C}) \qquad t_0 = 1 \text{ year} \tag{15.2}$$

In order to estimate the peak heat loss, a cold spell is superimposed on this temperature. The pulse starts in the middle of the winter ($t_1 = 3t_0/4$) and stops a week later ($t_2 = 1$ week). The outdoor temperature is shown in Figure 15.1. The heating season starts in the middle of September ($t_a = 4.5/12 \cdot t_0$) and stops in the middle of May ($t_b = 12.5/12 \cdot t_0$).

The lengths and widths of the slabs are:

$$L = 12 \text{ m} \qquad B = 8 \text{ m} \qquad \text{reference cases A and B} \tag{15.3}$$

$$L = 30 \text{ m} \qquad B = 15 \text{ m} \qquad \text{reference case C} \tag{15.4}$$

The equivalent insulation thicknesses are calculated in Example 8.1:

$$d = 3 \text{ m} \qquad \text{reference cases A and C} \tag{15.5}$$

$$d = 6 \text{ m} \qquad \text{reference case B} \tag{15.6}$$

The periodic penetration depth is obtained from Example 9.1.

$$d_0 = 2.74 \text{ m} \tag{15.7}$$

Example 15.1. Reference case A.

The heat loss for reference case A is given below. The result has been already shown in Figure 1.6. The steady-state heat loss is obtained from Example 8.1:

$$Q_s = 427 \text{ W}$$

The periodic heat loss is given in Example 9.4:

$$Q_p(t) = -144 \cdot \sin(2\pi(t/t_0 - 0.094)) \text{ W}$$

The total heat loss becomes:

$$Q(t) = 427 - 144 \cdot \sin(2\pi(t/t_0 - 0.094)) \text{ W}$$

The maximum heat loss for the cold spell is calculated in Example 10.5:

$$Q_t|_{max} = 101 \text{ W}$$

The maximum of the total heat loss becomes, according to (14.8):

$$Q|_{max} = 427 + 144 + 101 = 672 \text{ W}$$

Figure 15.1 shows the heat loss. The accumulated heat loss during the heating season is, from (14.5):

$$E_y = 2650 \text{ kWh}$$

The contribution from the periodic heat loss is 156 kWh, which is only 6% of the total accumulated heat loss. In the beginning of the heating season the periodic heat loss reduces the heat loss. Heat (from the warm summer) flows into the building from the ground. The heat loss level is then below the steady-state one. See Figure 15.1. At the end of the heating season the periodic heat loss increases the heat loss. Heat is flowing down into the ground. The sign of the periodic heat loss contribution changes, and thus the net effect becomes small.

Example 15.2. Reference case B.

The steady-state heat loss is obtained from Example 8.1:

$$Q_s = 262 \text{ W}$$

The periodic heat loss is given in Example 9.5:

$$Q_p(t) = -84 \cdot \sin(2\pi(t/t_0 - 0.11)) \text{ W}$$

The total heat loss becomes:

$$Q(t) = 262 - 84 \cdot \sin(2\pi(t/t_0 - 0.11)) \text{ W}$$

The maximum heat loss for the cold spell is calculated in Example 10.5:

$$Q_t|_{max} = 52 \text{ W}$$

The maximum of the heat loss becomes, according to (14.8):

$$Q|_{max} = 262 + 84 + 52 = 398 \text{ W}$$

Figure 15.1 shows the total heat loss. The accumulated heat loss during the heating season is, from (14.5):

$$E_y = 1650 \text{ kWh}$$

The contribution from the periodic heat loss is 7% of the total accumulated heat loss.

Example 15.3. Reference case C.

The steady-state heat loss is obtained from Example 8.1:

$$Q_s = 1404 \text{ W}$$

The periodic heat loss is given in Example 9.3:

$$Q_p(t) = -324 \cdot \sin(2\pi(t/t_0 - 0.094)) \text{ W}$$

The total heat loss becomes:

$$Q(t) = 1404 - 324 \cdot \sin(2\pi(t/t_0 - 0.094)) \text{ W}$$

The maximum heat loss for the cold spell is calculated in Example 10.5:

$$Q_t|_{max} = 225 \text{ W}$$

The maximum of the heat loss becomes, according to (14.8):

$$Q|_{max} = 1404 + 324 + 225 = 1953 \text{ W}$$

Figure 15.1 shows the total heat loss. The accumulated heat loss during the heating season is, from (14.5):

$$E_y = 8550 \text{ kWh}$$

The contribution from the periodic heat loss is 4% of the total accumulated heat loss.

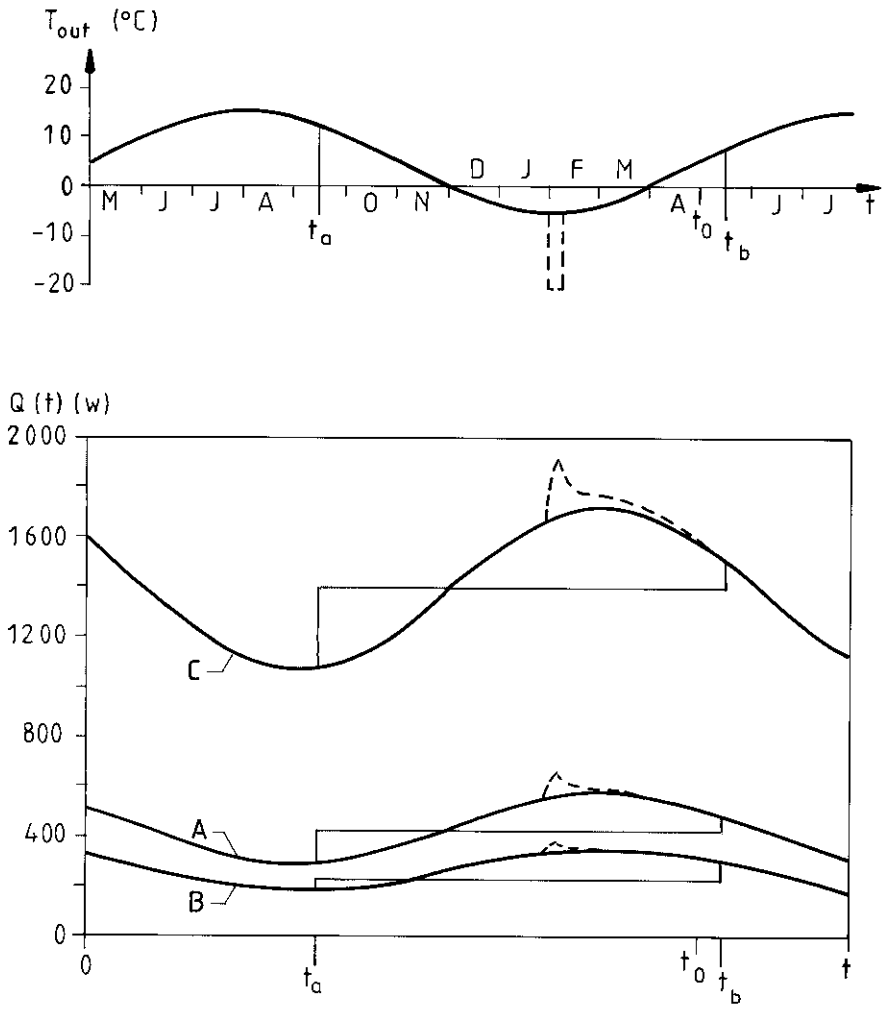

Figure 15.1: Outdoor temperature and heat loss for reference case A,B and C (M=May, and so on). The horizontal lines show the steady-state heat loss during the heating season.

15.2 COMPARISON WITH THE SWEDISH BUILDING CODE

It is interesting to compare the results from this study with the Swedish building code

(SBN), [39]. The comparisons are made for reference cases A,B and C.

The Swedish building code gives a method for calculating the U-value. The maximum heat loss is calculated from the U-value and a given lowest outdoor temperature (according to formula (15.8) below). Except for this, no explicit formulation as to how the heat losses should be calculated is given. In the comparisons below with the formulæ of this study, we will use (15.8) with the U-values given by the Swedish building code.

The U-value gives the heat loss per square meter for a difference of one degree Centigrade between indoor and outdoor temperature. We get the following formula:

$$Q(t) = \mathrm{U} \cdot A(T_{in} - T_{out}(t)) \text{ W} \qquad \text{(U-SBN)} \tag{15.8}$$

Here A is the area of the slab. The heat loss is proportional to the temperature difference between indoor and outdoor temperature. Implicitly this means that the heat loss is given by the steady-state heat loss every time using the actual temperature difference.

In the Swedish building code the slab is divided into an outer, an intermediate, and a central region. A thermal resistance for the ground is given for each region. The U-value for the whole slab is calculated from the thermal resistances of the ground and the insulation.

15.2.1 HEAT LOSS

The heat losses for the reference cases are calculated according to (15.8) for a whole year. The heat losses are then compared with the heat losses given by Examples 15.1-3.

The Swedish building code gives the thermal resistance of the soil for the three regions mentioned above. For clay, sand and gravel with the thermal conductivity 1.4 W/mK we get the following thermal resistances for the three regions: 1.0, 3.4 and 4.4 m^2K/W. The thermal conductivity for reference cases A,B and C is 1.5 W/mK. Thus the thermal resistances are reduced by the factor 1.4/1.5 to 0.93, 3.2 and 4.1 m^2K/W, respectively. Using these resistances we get the following U-values:

$$\text{A: U} = 0.26 \qquad \text{B: U} = 0.16 \qquad \text{C: U} = 0.22 \qquad (\mathrm{W/m^2K}) \tag{15.9}$$

The areas of the three slabs are 96, 96 and 460 m^2.

The heat loss during the year for reference cases A and C is shown in Figure 15.2. The heat losses calculated in Examples 15.1 and 15.3 are also shown. The maximum difference between the two calculation methods is 130 %. The U-value method cannot handle the periodic heat loss component or the cold spell, i.e. the transient components. However, the calculated steady-state heat losses are quite close to each other. The amplitude of the periodic component becomes 3 times too large by the U-value method, and there is no time-delay between the outdoor temperature and the heat loss. The heat loss due to the cold spell becomes 6 times too large.

15.2.2 STEADY-STATE HEAT LOSS

The steady-state heat loss is given in Table 15.1 for the reference cases. The annual mean value of the outdoor temperature is used in (15.8) in order to get the steady-state heat loss. The difference in the steady-state heat loss is about 10 %. The U-value method underestimates the heat loss for the smaller slab and overestimates it for the larger slab.

The heat loss for the slab is determined by the thermal insulation of the slab, which is known, and the thermal resistance of the ground. The latter may be represented by the equivalent soil thickness D_m discussed in Section 8.1. In order to test how well the Swedish building code estimates the thermal resistance of the soil alone, we calculate D_m for the two methods. For reference case A we get:

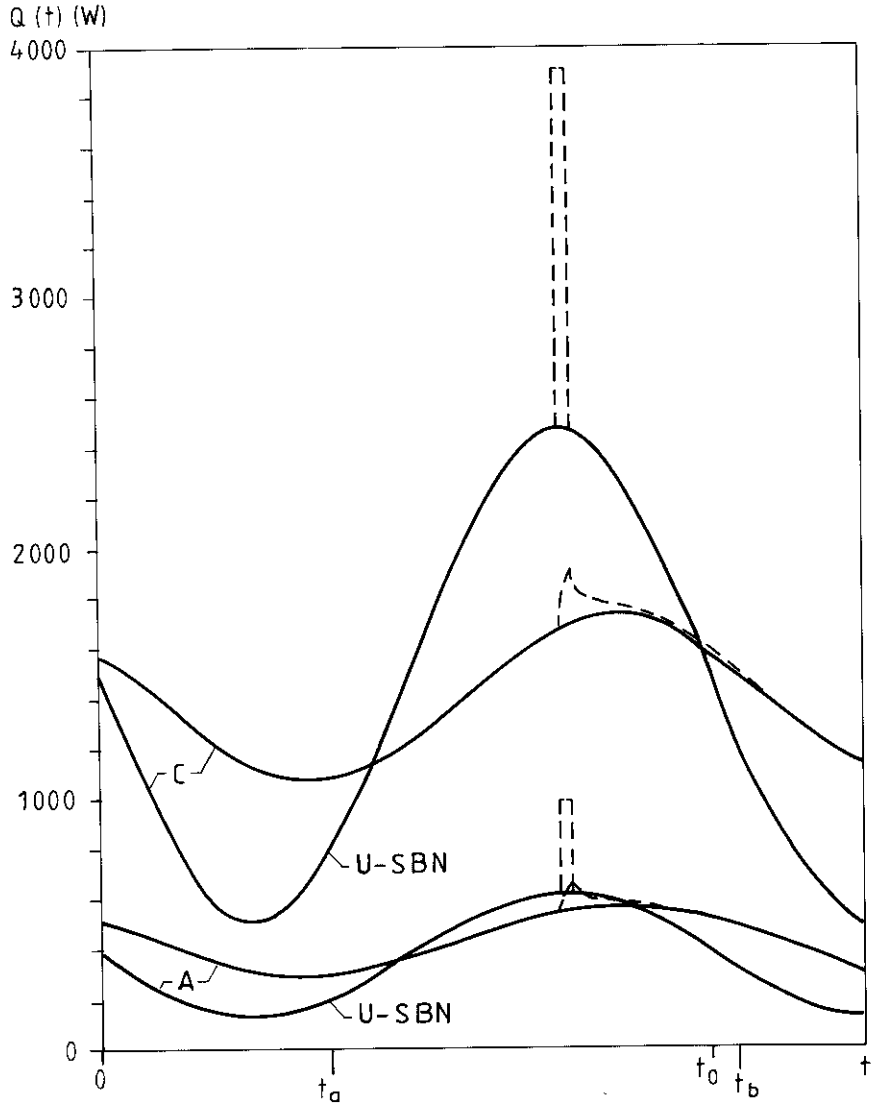

Figure 15.2: Heat loss for reference cases A and C calculated with U-values according to Swedish building code (U-SBN) and according to Examples 15.1 and 15.3. The outdoor temperature is shown in Figure 15.1. The time period t_0 is one year.

	A	B	C
(8.2)	427	262	1404
U-SBN	378	235	1467

Table 15.1: Steady-state heat loss Q_s (W) for reference cases A,B and C calculated according to (8.2) and the Swedish building code (U-SBN).

$$D_m = 2.8 \text{ m} \quad \text{(from U-SBN)} \qquad D_m = 2.1 \text{ m} \quad \text{(from (8.2))} \tag{15.10}$$

The error, when U-SBN is used, in the estimation of the thermal resistance of the soil is about 25 %. The total thermal resistance, which gives the heat loss, is given by the sum of the equivalent insulation thickness and the equivalent soil thickness ($d + D_m$). Both these parameters are about 3 meters. An error in D_m of 25 % then gives an error in the heat loss of half the magnitude. For slabs with thick insulation the equivalent insulation thickness is much larger than D_m, and then the error in the heat loss becomes small.

In the calculations of the thermal resistance for the outer region (0-1 meter from the edge), the heat flow is assumed to follow circular arcs. The circles have their center at the edge line. For the central region the heat flow is assumed to go straight down to a depth where the temperature is constant. This depth is assumed to be 6 meters. For the intermediate region (1-6 meters from the edge) a mean value between these lengths are used.

The arc approximation for the outer region underestimates the heat flow, since the restriction of heat flow paths to circular arcs reduces the heat flow. The arc approximation is analysed in Section 8.3. In order to get a better approximation, heat flow along two arcs should be used for a two-dimensional case. This type of circular arc approximation is shown in Figure 8.10.

For the central region the heat flow is assumed to go straight down to a depth where the temperature is constant. This assumption of a straight heat flow path (with the arbitrary length 6 m) gives an overestimation of the heat flow.

The assumptions for the outer and the central region results in an underestimation of the heat loss for small slabs, and an overestimation for large slabs.

15.2.3 ACCUMULATED HEAT LOSS DURING HEATING SEASON

The accumulated heat loss over a heating season E_y is given by the area under the curves in Figure 15.2 for the time between t_a and t_b. With (15.8) we get:

$$E_y = \mathrm{U} \cdot A \int_{t_a}^{t_b} (T_{in} - T_{out}(t))\, dt \tag{15.11}$$

The integral gives the number of degree-days (°C days) during the heating season. For the reference cases we have $t_a = 4.5/12 \cdot t_0$ and $t_b = 12.5/12 \cdot t_0$. The outdoor temperature is given by (15.2). It gives 4 600 degree-days.

The accumulated heat loss E_y is given in Table 15.2 for the reference cases according to (15.11) and (14.5). The difference in E_y is 6, 3 and 30 % for reference case A,B and C,

	A	B	C
(14.5)	2650	1650	8550
U-SBN	2800	1700	11000

Table 15.2: Accumulated heat loss E_y (kWh) during the heating season for reference cases A,B and C according to (14.5) and the Swedish building code (15.11) (U-SBN).

respectively.

Figure 15.2 shows how the heat loss varies periodically around an annual mean value. The difference in this mean value is small for the two methods. However, for the periodic variation the difference becomes much larger. It is shown in Chapter 9 that the periodic heat loss is located at the edge regions. The inner parts of the slab do not give any significant contribution to the heat loss. Thus formula (15.8) gives a strong overestimation of the periodic

heat loss. The error becomes large for large slabs. For cases A and B the errors in the annual mean heat loss and in the periodic heat loss counteract. This results in a small error of E_y. For the large slab the errors in the annual mean value and in the periodic heat loss have the same sign, and the total error becomes large.

15.2.4 PEAK EFFECT

According to the Swedish building code (Chapter 35 in [39]), the peak effect is obtained from formula (15.8) with the outdoor temperature equal to the dimensioning lowest temperature (LUT) of the year.

The calculation of the peak effect for the reference cases is based on the representation of the outdoor temperature shown in Figure 14.1. The superimposed cold spell results in the lowest temperature of the winter, -20°C. This will be used as the dimensioning lowest temperature (LUT) in the calculation of the peak effect. The peak heat losses for the reference cases are given in Table 15.3. The maximum difference in peak effect is 100 %.

	A	B	C
(14.8)	670	400	1950
U-SBN	1000	615	3960

Table 15.3: Peak effect $Q|_{max}$ for the reference cases calculated according to Swedish building code (U-SBN) and according to (14.8).

The U-value method does not take the dynamics of the heat transfer in the ground into consideration. Figure 1.6 shows an example with a superimposed temperature pulse during the winter. The heat loss due to the pulse starts at zero and slowly increases to a maximum value at the end of the pulse. For a very long pulse this final value is obtained from the steady-state value for the actual temperature difference between the in- and outdoor temperature. In the calculation according to the Swedish building code the heat loss is given by this steady-state value during the whole pulse. For short pulses the error is therefore very large during the whole pulse. It takes a longer time for a large slab to reach the steady-state heat loss. The error is therefore larger for large slabs than for small ones.

According to Example 10.3 it takes about one year to reach the steady-state heat loss for reference cases A and B. For the larger slab of reference case C, it takes four years.

This analysis is applicable to the periodic heat loss as well. The periodic outdoor temperature can roughly be approximated by two pulses of opposite sign. The first pulse gives the mean summer temperature, and the second one gives the mean winter temperature. The length of the pulses is then $t_0/2$. These two pulses have a long duration time in comparison with the cold spell, which had the duration of one week only. The calculated heat loss according to (U-SBN) should therefore become much better for the periodic case than for the cold spell. This is indeed shown in Figure 15.2.