LUND UNIVERSITY

Heat loss to the ground from a building : slab on the ground and cellar

Hagentoft, Carl-Eric

1988

Link to publication

Citation for published version (APA):
Hagentoft, C.-E. (1988). *Heat loss to the ground from a building : slab on the ground and cellar*. [Doctoral Thesis (monograph), Division of Building Physics]. Byggnadsfysik LTH, Lunds Tekniska Högskola.

Total number of authors:
1

General rights
Unless other specific re-use rights are stated the following general rights apply:
Copyright and moral rights for the publications made accessible in the public portal are retained by the authors and/or other copyright owners and it is a condition of accessing publications that users recognise and abide by the legal requirements associated with these rights.
• Users may download and print one copy of any publication from the public portal for the purpose of private study or research.
• You may not further distribute the material or use it for any profit-making activity or commercial gain
• You may freely distribute the URL identifying the publication in the public portal

Read more about Creative commons licenses: https://creativecommons.org/licenses/

Take down policy
If you believe that this document breaches copyright please contact us providing details, and we will remove access to the work immediately and investigate your claim.

LUND UNIVERSITY

PO Box 117
221 00 Lund
+46 46-222 00 00

Part C: CELLAR

16 STEADY-STATE HEAT LOSS **159**
16.1 Heat loss factor 159
16.2 Approximation for a well-insulated cellar 162
16.3 Cellar with totally insulated wall 163
16.3.1 Approximations for small and large values of d 164
16.3.2 General approximation for a cellar with totally insulated wall 166
16.4 Wall component Q_{s2} 167
16.4.1 Edge approximation 168
16.4.2 Edge approximation for well insulated cellar walls 171
16.5 General approximation for Q_s 172

17 PERIODIC HEAT LOSS **173**
17.1 Heat loss factor for an edge 173
17.2 Infinitely deep cellar 177
17.2.1 Heat loss factor 177
17.2.2 Heat loss factor for a wall segment 179
17.3 Heat flow through the floor 179
17.4 Approximation for deep cellars 183
17.5 Approximation for shallow cellars 184
17.6 General approximation for Q_p 186
17.7 Correction for surface resistance 187

18 STEP CHANGE OF OUTDOOR TEMPERATURE **189**
18.1 Heat loss factor for an edge 189
18.2 Infinitely deep cellar 193
18.2.1 Heat loss factor 193
18.2.2 Heat loss factor for a wall segment 194
18.3 Heat loss through the floor 197
18.3.1 Approximate formula 197
18.4 Approximation for deep cellars 198
18.5 Approximation for shallow cellars 199
18.6 Approximate edge heat loss formula 200

19 DESIGN RULES **203**
19.1 Outdoor temperature 203
19.2 Heat loss during heating season 203
19.3 Peak effect during the winter 204
19.4 PC-program for the design rules 205
19.5 Total heat loss for the reference cases 207

REFERENCES **213**

Part C

CELLAR

Chapter 16

STEADY-STATE HEAT LOSS

Figure 16.1 illustrates the steady-state temperature process for a cellar. The constant equivalent insulation thickness is d at the floor and d_w at the walls. The thermal resistance at the ground surface is mostly neglected, $d_1 = 0$. The outdoor temperature is T_0, and the indoor temperature is T_i. The building is rectangular with the width B and the length L. We will assume that L is larger than B ($B \leq L$). The depth to the cellar floor is H. The steady-state heat loss into the ground from the cellar is denoted by Q_s (W).

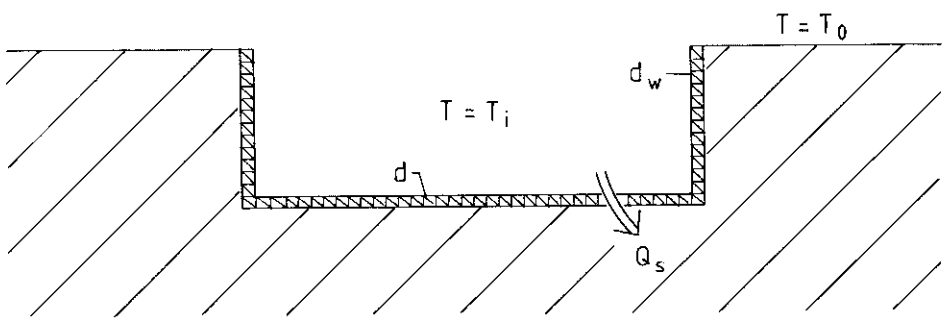

Figure 16.1: Steady-state heat loss component for a cellar with constant equivalent insulation d at the floor and d_w at the walls.

16.1 HEAT LOSS FACTOR

According to the scaling in Section 5.1, the heat loss Q_s can be written in the following way:

$$Q_s = \lambda(T_i - T_0)L \cdot h_s \tag{16.1}$$

Here h_s is the dimensionless steady-state heat loss factor. The heat loss problem contains the five lengths L, B, H, d and d_w. The heat loss factor is then a function of four dimensionless parameters. We get for the basic problem of Figure 16.1:

$$h_s = h_s(L/B, H/B, d/B, d_w/B) \tag{16.2}$$

The parameter d_1/d is added, if there is a thermal resistance ($d_1 \neq 0$) at the ground surface. The heat loss factor for a slab on the ground is the special case of (16.2) with $H/B = 0$.

No complete tables or diagrams are given for the heat loss factor (16.2). A large number of calculations must be done in order to cover all various combinations of parameters. A number of approximations for the heat loss factor will be given below. Together they will cover the most interesting cases. In Section 16.3 approximations for a cellar with totally insulated

walls will be given. The approximations are obtained from three-dimensional calculations. Approximations for the heat loss through the walls (and a counter-flow through the floor) are given in Section 16.4. They are obtained from two-dimensional calculations.

Table 16.1 shows the numerically calculated heat loss factor (16.2) for a few cases. The values are used in Example 16.1.

$L/B = 1.5$ $H/B = 0.25$		
d/B	d_w/B	h_s
0	2/8	4.94
0	6/8	4.07
1/8	1/8	5.11
2/8	2/8	3.65
1/8	3/8	3.52
2/8	3/8	3.12
3/8	3/8	2.87

$L/B = 2$ $H/B = 2/15$		
d/B	d_w/B	h_s
0	3/15	4.39
3/15	3/15	3.08

Table 16.1: A few numerically calculated heat loss factors for a cellar.

Example 16.1:

The steady-state heat loss for the cellar reference cases D and E are calculated below. The data are given in Section 1.7:

$T_i = 20°\text{C} \qquad T_0 = 5°\text{C}$
$\lambda = 1.5 \text{ W/mK} \qquad d_1 = 0 \qquad \lambda_i = \lambda_{iw} = 0.04 \text{ W/mK}$

For the reference cases D1, D2 and D3 we have:

$L = 12\text{m} \qquad B = 8\text{m} \qquad H = 2\text{m}$

These data give:

$\lambda(T_i - T_0)L = 1.5 \cdot (20 - 5) \cdot 12 = 270 \text{ W}$
$H/B = 0.25 \qquad L/B = 1.5$

For case D1 we get:

$d_i = 0.08 \text{ m} \qquad d_{iw} = 0.08 \text{ m}$
$d = 0.08 \cdot 1.5/0.04 = 3 \text{ m} \qquad d_w = 0.08 \cdot 1.5/0.04 = 3 \text{ m}$
$d/B = 3/8 \qquad d_w/B = 3/8$

From Table 16.1 we get the heat loss factor:

$h_s \approx 2.87$

The steady-state heat loss becomes:

$Q_s = 270 \cdot 2.87 = 775$ W

For case D2 we have:

$d_i = 0$ m $\quad d_{iw} = 0.16$ m
$d = 0$ m $\quad d_w = 0.16 \cdot 1.5/0.04 = 6$ m
$d/B = 0 \quad d_w/B = 6/8$

From Table 16.1 we get the heat loss factor:

$h_s \approx 4.07$

The steady-state heat loss becomes:

$Q_s = 270 \cdot 4.07 = 1099$ W

For case D3 we have:

$d_i = 0.027$ m $\quad d_{iw} = 0.027$ m
$d = 0.027 \cdot 1.5/0.04 = 1.0$ m $\quad d_w = 0.027 \cdot 1.5/0.04 = 1.0$ m
$d/B = 1/8 \quad d_w/B = 1/8$

From Table 16.1 we get the heat loss factor:

$h_s \approx 5.11$

The steady-state heat loss becomes:

$Q_s = 270 \cdot 5.11 = 1380$ W

For reference cases E1 and E2 we have:

$L = 30$m $\quad B = 15$m $\quad H = 2$m

These data give:

$\lambda(T_i - T_0)L = 1.5 \cdot (20 - 5) \cdot 30 = 675$ W
$H/B = 2/15 \quad L/B = 2$

For case E1 we have:

$d_i = 0.08$ m $\quad d_{iw} = 0.08$ m
$d = 0.08 \cdot 1.5/0.04 = 3$ m $\quad d_w = 0.08 \cdot 1.5/0.04 = 3$ m
$d/B = 3/15 \quad d_w/B = 3/15$

From Table 16.1 we get the heat loss factor:

$h_s \approx 3.08$

The steady-state heat loss becomes:

$Q_s = 675 \cdot 3.08 = 2079$ W

For case E2 we have:

$d_i = 0$ m $\quad d_{iw} = 0.08$ m
$d = 0$ m $\quad d_w = 0.08 \cdot 1.5/0.04 = 3$ m
$d/B = 0 \quad d_w/B = 3/15$

From Table 16.1 we get the heat loss factor:

$h_s \approx 4.39$

The steady-state heat loss becomes:

$Q_s = 675 \cdot 4.39 = 2963$ W

16.2 APPROXIMATION FOR A WELL-INSULATED CELLAR

Approximate formulæ for the heat loss of well-insulated cellar may be obtained from the theory of optimal insulation distribution, [14]. With this theory, approximate formulæ for the heat loss can be given, for which the thermal insulation capability of the ground is separated from the thermal resistance of the insulation.

The optimal insulation distribution theory was discussed briefly in Section 8.2. The case with an area A of the constant insulation thickness d was treated. For the cellar case we have two insulation thicknesses d and d_w. The mean equivalent insulation thickness d_m will be used instead of d. We get d_m from:

$$d_m = \frac{d \cdot LB + d_w \cdot H(2L + 2B)}{LB + H(2L + 2B)} \tag{16.3}$$

We get the following approximation for the heat loss from (8.10):

$$Q_s = \lambda(T_i - T_0)\frac{A}{d_m + B \cdot u_m} \tag{16.4}$$

Here the area A of the cellar becomes $LB + H(2L + 2B)$. The length $B \cdot u_m$ represents the equivalent soil thickness D_m, which is discussed in Section 8.1, (8.5). We get the following formula for the heat loss of the cellar:

$$Q_s = \lambda(T_i - T_0)L \cdot h_s(L/B, H/B, d/B, d_w/B)$$

$$h_s = \frac{1}{LB}\frac{LB + H(2L + 2B)}{d_m/B + u_m} \tag{16.5}$$

The dimensionless parameter u_m is a function of L/B and H/B. It does not depend on the thermal insulations of the problem. The parameter u_m has been calculated numerically. It is given in Table 16.2.

	H/B =0.10	0.15	0.20	0.25
L/B =1.0	0.20	0.22	0.24	0.26
1.5	0.25	0.27	0.28	0.30
3.0	0.33	0.34	0.36	0.37
∞	0.45	0.46	0.47	0.48

Table 16.2: The parameter u_m in Formula 16.5.

The maximum error in the formula, compared with direct numerical calculations, is less than 6% for d/B and d_w/B both greater than 0.35. The approximation is better the thicker the cellar insulation is. The heat loss formula (16.5) is used for reference case D in Example 16.2. It is tested against the numerically calculated heat loss factors.

Example 16.2:

The approximation (16.5) of $h_s(L/B, H/B, d/B, d_w/B)$ for reference cases D1, D2 and D3 are given below. The heat loss factor is compared with the numerically calculated one:

D1:	$d/B = 0.375$	$d_w/B = 0.375$	$h_s = 2.72$	$h_s = 2.87$ (num. calc.)
D2:	$d/B = 0$	$d_w/B = 0.750$	$h_s = 2.47$	$h_s = 4.07$ (num. calc.)
D3:	$d/B = 0.125$	$d_w/B = 0.125$	$h_s = 4.31$	$h_s = 5.11$ (num. calc.)

It is obvious that the approximation works well for case D1, which is the best insulated cellar. For the other cases it fails.

16.3 CELLAR WITH TOTALLY INSULATED WALL

Figure 16.2 shows a cellar, for which we assume that the walls are totally insulated ($d_w = \infty$). The equivalent insulation thickness of the floor is d. The thermal resistance at the ground surface is neglected ($d_1 = 0$). The heat loss to the ground is denoted by Q_{s1}. It gives the heat loss through the floor. The heat loss through the wall is zero. The heat flow through the walls will be accounted for in Section 16.4.

The steady-state problem contains the four lengths L, B, H and d. The dimensionless steady-state heat loss factor will depend on three dimensionless parameters. We get:

$$Q_{s1} = \lambda(T_i - T_0)L \cdot h_{s1}(L/B, H/B, d/B) \tag{16.6}$$

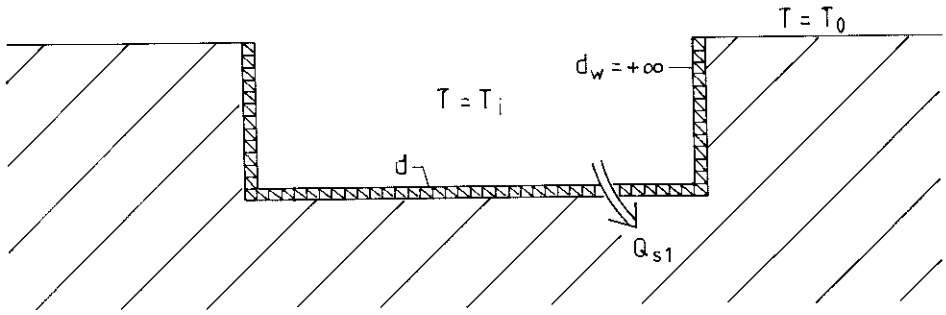

Figure 16.2: Steady-state thermal process for a cellar with totally insulated walls and constant insulation thickness d at the floor.

The heat loss for a cellar with a small depth to the floor is given approximately by the formulæ for the slab with $d_1 = H$. We get for the case with finite floor insulation:

$$h_{s1}(L/B, H/B, d/B) \approx h_s(L/B, d/B, d_1/d)|_{\text{slab with } d_1 = H} \tag{16.7}$$

$$d \neq 0 \quad H/B < 0.1$$

The heat loss factor for the slab ($d \neq 0$) is given by Figures 8.3-4. For the case without floor insulation we get:

$$h_{s1}(L/B, H/B, d/B) \approx h_s(L/B, d/B, d_1/B)|_{\text{slab with } d_1 = H} \tag{16.8}$$

$$d = 0 \quad H/B < 0.1$$

The heat loss factor for the slab ($d = 0$) is given by Figures 8.5.

The heat loss factor h_{s1} has been calculated numerically for $d = 0$. The result is given in Figure 16.3 and Table 16.3.

	H/B =0.10	0.15	0.20	0.25
L/B =1.0	4.59	4.33	4.16	4.03
1.5	3.95	3.72	3.57	3.45
3.0	3.28	3.07	2.94	2.83
∞	2.78	2.56	2.42	2.31

Table 16.3: Heat loss factor h_{s1} for a cellar with totally insulated walls ($d_w = \infty$) and uninsulated floor ($d = 0$).

16.3.1 APPROXIMATIONS FOR SMALL AND LARGE VALUES OF d

The thermal resistance of the soil can be represented by an equivalent layer of soil D_m. We have from (8.6) for any d and in particular for $d = 0$:

$$h_{s1}(L/B, H/B, d/B) = \frac{LB}{L(d + D_m)} \qquad h_{s1}(L/B, H/B, 0) = \frac{LB}{LD_m} \tag{16.9}$$

Note that A is equal to the floor area LB, since the walls are totally insulated. We neglect the dependence of D_m on the insulation thickness for small d/B. Then we get:

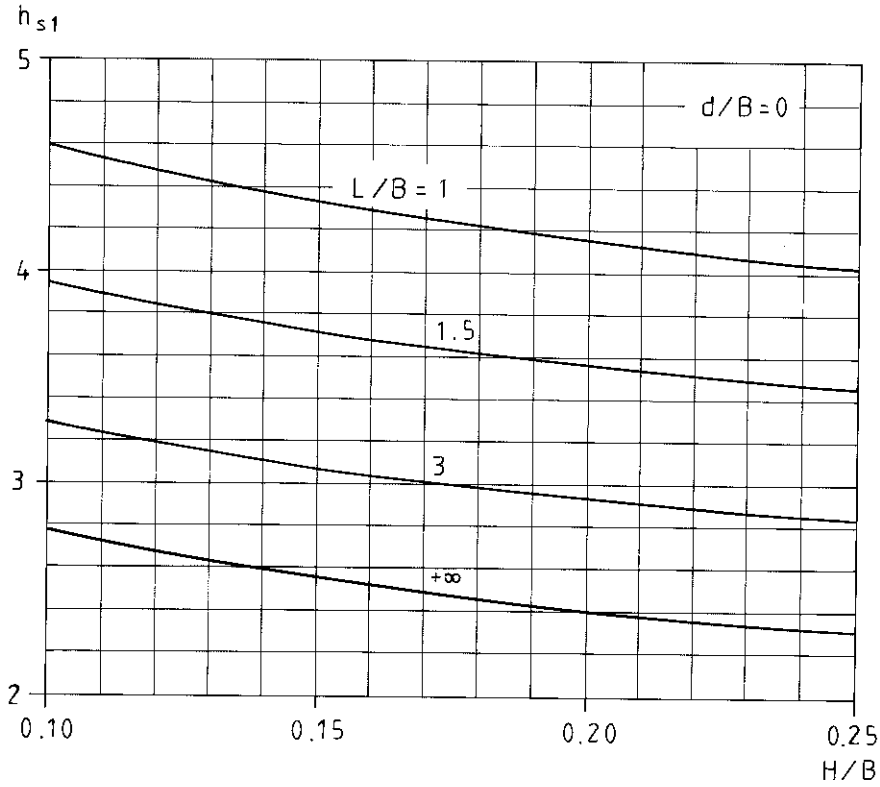

Figure 16.3: Heat loss factor h_{s1} for a cellar with totally insulated walls ($d_w = \infty$) and uninsulated floor ($d = 0$).

$$h_{s1}(L/B, H/B, d/B) \approx \frac{1}{d/B + 1/h_{s1}(L/B, H/B, 0)} \qquad d/B < 0.02 \tag{16.10}$$

The approximation is good only for floors with a very thin insulation thickness. The approximation is shown in Figure 16.4 for the case $L/B = 1.5$ and $H/B = 0.25$.

In order to get an approximation for a cellar with a well-insulated floor, we use the theory of optimal insulation, [14]. In section 16.2 the approximation according to optimal insulation distribution was given for the case when both d and d_w was finite. For the case when the insulation of the wall is total, we only have to consider the floor insulation d. The area A is equal to LB. Using (8.11-12) we get:

$$h_{s1} = \frac{1}{d/B + u_{m1}} \qquad d/B > 0.2 \tag{16.11}$$

The approximation is good for well-insulated cellar floors. The parameter u_{m1} depends on L/B and H/B. However, it does not depend on the insulation thickness d. The approximation is shown in Figure 16.4 for the case $L/B = 1.5$ and $H/B = 0.25$. The parameter u_{m1} is calculated numerically. It is given in Table 16.4.

	H/B =0	0.10	0.15	0.20	0.25
L/B =1.0	0.26	0.29	0.30	0.31	0.31
1.5	0.30	0.34	0.35	0.36	0.37
3.0	0.36	0.41	0.43	0.44	0.45
∞	0.39	0.50	0.53	0.54	0.56

Table 16.4: The parameter u_{m1} in (16.11).

16.3.2 GENERAL APPROXIMATION FOR A CELLAR WITH TOTALLY INSULATED WALL

From the previous section we have approximations for h_{s1} both for small and large insulation of the floor. An approximation for the intermediate region can be obtained from these formulæ by using the mean value of the two approximations. Then we get:

$$h_{s1} = \frac{1}{d/B + 1/h_{s1}(L/B, H/B, 0)} \qquad d/B \le 0.02$$

$$h_{s1} = \frac{1}{d/B + u_{m1}} \qquad d/B > 0.2 \qquad H/B \ge 0.1$$

$$h_{s1} = \frac{1}{2} \cdot \left\{ \frac{1}{d/B + 1/h_{s1}(L/B, H/B, 0)} + \frac{1}{d/B + u_{m1}} \right\} \qquad 0.02 < d/B \le 0.2 \tag{16.12}$$

This formula is valid for $H/B \ge 0.1$. The case $H/B \le 0.1$ is covered by formulæ (16.7-8).

It should be noted that the approximate formula (16.12) has small discontinuities at $d/B = 0.02$ and at $d/B = 0.2$. We have not taken the trouble to remove them by a more elaborate interpolation. Formula (16.12) has been compared with the heat loss factors for the examples in Figure 16.4 obtained from numerical calculations. The largest difference is 7 %. The error in the formula is judged to be less than 10%. This is based on the comparison of Figure 16.4 and experiences from other cases.

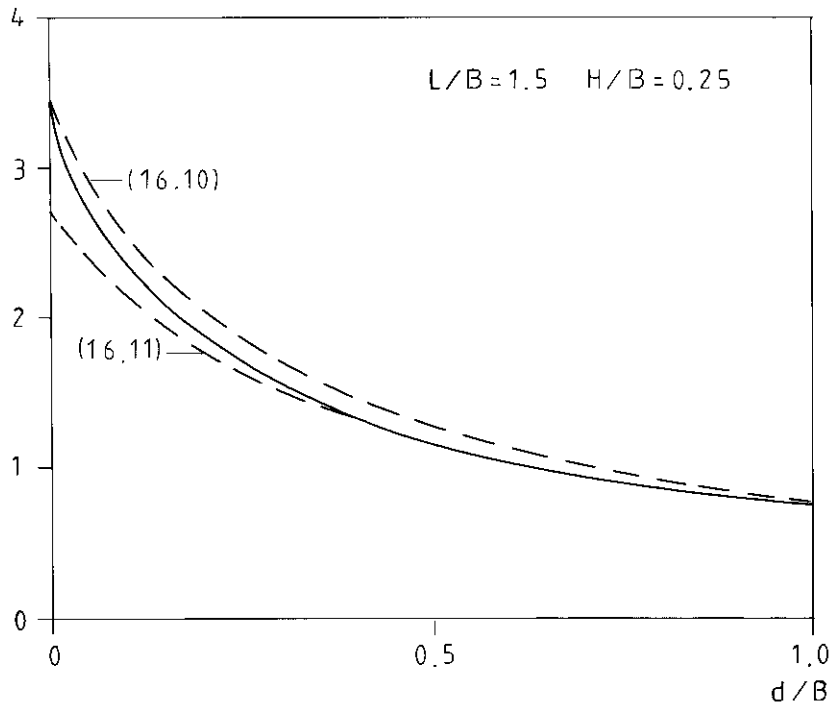

Figure 16.4: The approximations (16.10) and (16.11) for h_{s1} compared with numerical calculations.

Example 16.3:

The approximation for $h_{s1}(L/B, H/B, d/B)$ and Q_{s1} for reference case D are obtained from (16.12), and Tables 16.3 and 16.4. The parameters h_{s1} and u_{m1} are obtained by interpolation for reference case E.

D1:	$h_{s1}(1.5, 0.25, 0.375) \approx 1.34$	$Q_{s1} \approx 362$ W
D2:	$h_{s1}(1.5, 0.25, 0) \approx 3.45$	$Q_{s1} \approx 932$ W
D3:	$h_{s1}(1.5, 0.25, 0.125) \approx 2.22$	$Q_{s1} \approx 600$ W
E1:	$h_{s1}(2, 0.133, 0.20) \approx 1.90$	$Q_{s1} \approx 1287$ W
E2:	$h_{s1}(2, 0.133, 0) \approx 3.50$	$Q_{s1} \approx 2362$ W

16.4 WALL COMPONENT Q_{s2}

Figure 16.5 shows the superposition that is used to solve our original problem with finite wall insulation. The first figure shows the original case to be solved. The heat loss to the ground is Q_s. The second figure shows the case with total insulation of the walls ($d_w = \infty$), with the heat loss Q_{s1}. The last figure represents the residual problem to be solved. It gives the heat loss Q_{s2}. The steady-state heat loss becomes:

$$Q_s = Q_{s1} + Q_{s2} \tag{16.13}$$

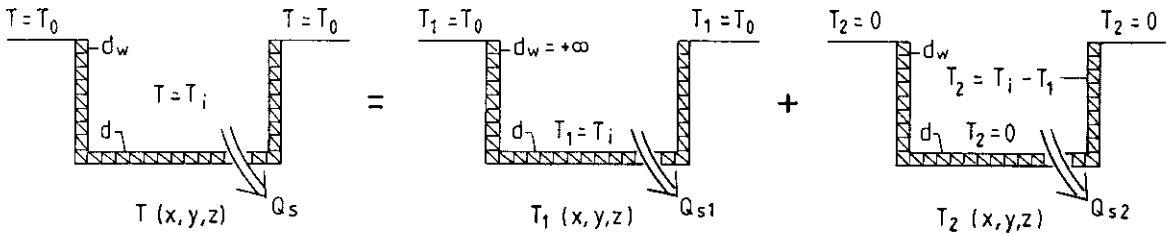

Figure 16.5: The superposition of the temperature field T_1 for a cellar with a totally insulated wall and the residual temperature field T_2 in order to get the temperature for the original problem shown by the first figure to the left.

The temperature field $T(x, y, z)$ and the heat loss Q_s of our original problem depend on the length parameters of the problem: L, B, H, d, and d_w. For the case with a totally insulated wall the parameter d_w vanishes. Thus the temperature field $T_1(x, y, z)$ and the heat loss Q_{s1} depend on the length parameters L, B, H, and d. The residual temperature field $T_2(x, y, z)$ depends on all parameters of the original problem. However, the number of parameters for this problem will be reduced by introducing an edge approximation. This is discussed in Section 16.4.1.

The superposition technique is presented in Section 4.1. The case considered here is somewhat more complicated, since there are two types of boundary condition at the cellar wall. According to (3.15) (with $d = d_w$) we have the following boundary condition at the wall for the original problem.

$$d_w \frac{\partial T}{\partial n} = T - T_i \qquad \text{(at the wall)} \tag{16.14}$$

The temperature T_i is the indoor temperature. It is also the temperature at the inner surface of the wall insulation. The heat flow, and hence the normal derivative, is zero for the case with totally insulated walls. Thus for T_1 we have:

$$\frac{\partial T_1}{\partial n} = 0 \qquad \text{(at the wall)} \tag{16.15}$$

With $T = T_1 + T_2$ inserted in (16.14), we get:

$$d_w \frac{\partial (T_1 + T_2)}{\partial n} = T_1 + T_2 - T_i \qquad \text{(at the wall)} \tag{16.16}$$

Using (16.15) we get:

$$d_w \frac{\partial T_2}{\partial n} = T_2 - (T_i - T_1) \qquad \text{(at the wall)} \tag{16.17}$$

This is a boundary condition of the type (16.14) for the residual temperature $T_2(x, y, z)$. The indoor temperature T_i is replaced by $T_i - T_1$. It should be noted that T_1 is the temperature outside the total insulation. It will be variable over (and along) the cellar walls.

16.4.1 EDGE APPROXIMATION

The boundary temperature, i.e. the temperature at the ground surface and inside the cellar insulations, for the residual temperature T_2 is zero everywhere except at the inside of the wall

insulation. The temperature at the inner surface varies between 0 and $T_i - T_0$. The highest temperature occurs in the upper part of the wall near the ground surface.

The temperature T_2 is largest in the ground near the walls of the cellar. The temperature field can be treated as a disturbance, located at the edge regions of the cellar, which must be added to T_1 in order to obtain the original temperature field T. Due to the local character of the disturbance, it can be obtained with an acceptable accuracy from a two-dimensional edge analysis. Figure 16.6 shows in analogy with Figure 16.5 the superposition for an edge of a wide cellar ($H/B \ll 1$). The temperature inside the wall insulation for the residual problem becomes $T_i - T_1|_{wall}$. This edge problem contains the length parameters H, d and d_w. We have reduced the numbers of parameters from five to three.

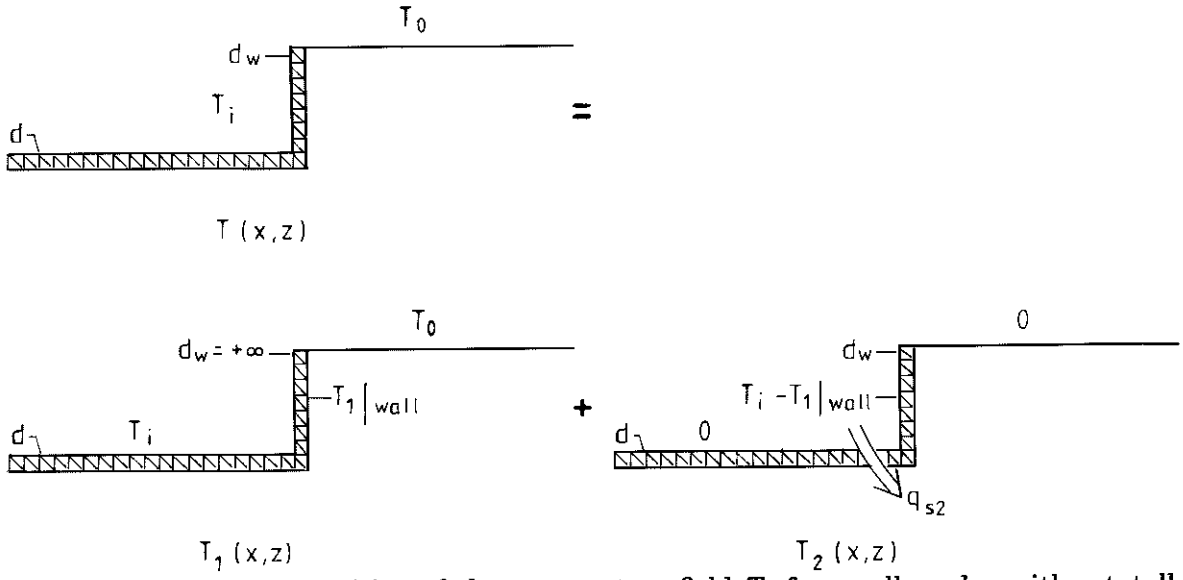

Figure 16.6: The superposition of the temperature field T_1 for a cellar edge with a totally insulated wall and the residual temperature field T_2 in order to get the temperature for the original problem shown on the top of the figure.

The edge heat loss q_{s2} (W/m) due to the temperature field T_2 is calculated for a cellar of infinite width. The heat loss Q_{s2} is obtained from the following edge approximation:

$$\begin{aligned} Q_{s2} &= L_e \cdot q_{s2} \qquad H/B < 0.25 \\ q_{s2} &= \lambda(T_i - T_0) \cdot h_{s2}(d/H, d_w/H) \end{aligned} \tag{16.18}$$

The accuracy for the edge approximation is best for wide cellars $H/B \ll 1$. However, the results from comparisons of (16.18) with several numerically calculated heat losses show that the edge approximation gives a reasonable accuracy for $H/B < 0.25$. The dimensionless steady-state heat loss factor h_{s2} depends on the two parameters d/H and d_w/H. The heat loss factor is given in Table 16.5 and Figure 16.7. The cases $d/H = 0$ and $d/H = +\infty$ are solved analytically in [6], while the cases $d/H = 1$ and $d/H = 2$ are calculated numerically. The dashed curves show the approximation (16.19) below.

The temperature field T_2 at an edge of a wide cellar is given in the supplementary report [6]. The cases $d = 0$ and $d = +\infty$ are treated. The solution of the temperature problem uses complex-valued analytical functions, and the known solution of the Riemann-Hilbert problem for a half-plane. This is the problem of finding a function, analytical in a half-plane and having a prescribed real part on the real axis. It is shown that the temperature is largest near the wall and drops rapidly for increasing distance from the wall. The temperature is of

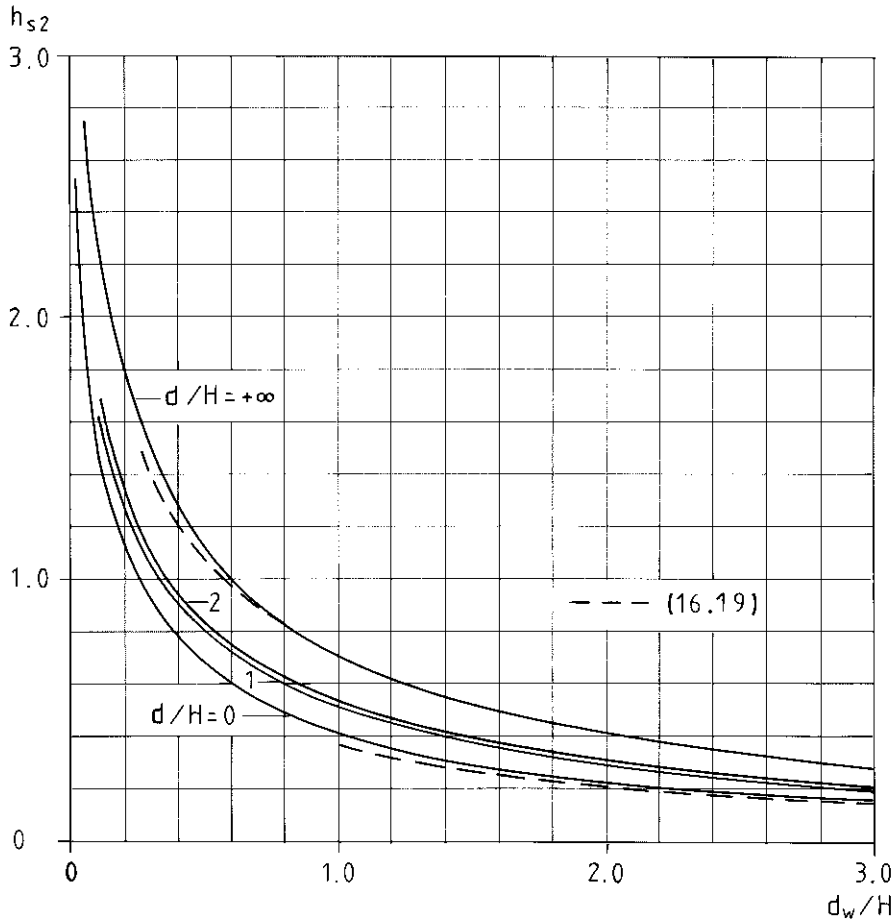

Figure 16.7: Edge heat loss factor h_{s2} for the residual temperature problem T_2 of Figure 16.6.

	d/H =0	1	2	∞
d_w/H =0.1	1.56	1.63	1.68	2.26
0.2	1.15	1.29	1.34	1.77
0.3	0.93	1.08	1.12	1.47
0.4	0.79	0.93	0.97	1.27
0.5	0.68	0.82	0.85	1.12
1.0	0.41	0.52	0.54	0.71
1.5	0.30	0.38	0.40	0.52
2.0	0.23	0.30	0.31	0.42

Table 16.5: Edge heat loss factor h_{s2} for the residual temperature problem T_2 of Figure 16.6.

a local type.

Example 16.4:

The approximation for $h_{s2}(d/H, d_w/H)$ and Q_{s2} from (16.18) and Figure 16.7 are given below for the reference cases. The perimeter length for reference case D is 40 m, and for reference case E it is 90 m.

D1:	$d/H = 1.5$	$d_w/H = 1.5$	$h_{s2} \approx 0.39$	$Q_{s2} \approx 351$ W
D2:	$d/H = 0.0$	$d_w/H = 3.0$	$h_{s2} \approx 0.16$	$Q_{s2} \approx 144$ W
D3:	$d/H = 0.5$	$d_w/H = 0.5$	$h_{s2} \approx 0.75$	$Q_{s2} \approx 675$ W
E1:	$d/H = 1.5$	$d_w/H = 1.5$	$h_{s2} \approx 0.39$	$Q_{s2} \approx 790$ W
E2:	$d/H = 0.0$	$d_w/H = 1.5$	$h_{s2} \approx 0.30$	$Q_{s2} \approx 607$ W

16.4.2 EDGE APPROXIMATION FOR WELL-INSULATED CELLAR WALLS

An approximate formula for the heat loss factor h_{s2} according to the theory of optimal insulation is useful for well-insulated cellar walls. The theory behind this will be presented in a separate report, [15]. We will only present the results here. We have:

$$h_{s2} \approx \frac{(1 - v_m)^2}{d_w/H + u_m} \tag{16.19}$$

The parameters u_m and v_m both depend on the variable d/H, but not on d_w/H. The parameters are calculated numerically and they are given in Table 16.6.

d/H	0	0.1	0.5	1.0	2.0	5.0	10.0	∞
u_m	0.34	0.39	0.40	0.41	0.41	0.42	0.43	0.44
v_m	0.30	0.23	0.19	0.17	0.14	0.11	0.08	0

Table 16.6: The parameters u_m and v_m in (16.19).

The error in the formula is less than 12 % for $d_w/H > 1$.

16.5 GENERAL APPROXIMATION FOR Q_s

The various formulæ and approximations will be summarized in order to get a general approximation. The following scheme can be followed in order to get an approximation of Q_s for the case $H/B < 0.25$ with an error less than 10%.

d/B or $d_w/B < 0.35$:

$$Q_s = Q_{s1} + Q_{s2}$$

$$Q_{s1} = \lambda(T_i - T_0)L \cdot h_{s1}(L/B, H/B, d/B)$$

$$Q_{s2} = L_e \cdot q_{s2} \qquad q_{s2} = \lambda(T_i - T_0) \cdot h_{s2}(d/H, d_w/H) \tag{16.20}$$

h_{s1}: $H/B < 0.1$ Formula 16.7-8, Figures 8.3-5
$H/B > 0.1$ Formula 16.12, Table 16.3-4, Figure 16.3

h_{s2}: Table 16.5 and Figure 16.7

d/B and $d_w/B > 0.35$:

Formula 16.5, Table 16.2 (16.21)

Example 16.5:

The heat loss approximations for cellars according to (16.20-21) are applied to the reference cases D and E. The result is given below. The approximations for Q_{s1} and Q_{s2} are obtained from Examples 16.3-4. The heat losses from a direct numerical calculation are also given.

D1:	$Q_s \approx 734$ W	775 W (num.calc)
D2:	$Q_s \approx Q_{s1} + Q_{s2} = 932 + 144$ W $= 1076$ W	1099 W (num.calc)
D3:	$Q_s \approx Q_{s1} + Q_{s2} = 600 + 675$ W $= 1275$ W	1380 W (num.calc)
E1:	$Q_s \approx Q_{s1} + Q_{s2} = 1282 + 790$ W $= 2072$ W	2079 W (num.calc)
E2:	$Q_s \approx Q_{s1} + Q_{s2} = 2362 + 607$ W $= 2969$ W	2963 W (num.calc)

We see that the error in the approximation is less than 8 % for the reference cases. The poorest accuracy is obtained for D3. For this case Q_{s1} and Q_{s2} are of the same magnitude. The approximation for Q_{s2} obtained from a two-dimensional analysis is not very good for small and well insulated cellars. The approximation for case D1 is obtained from (16.21). If (16.20) is used instead the heat loss becomes 710 W.

Chapter 17

PERIODIC HEAT LOSS

The periodic heat loss component for the cellar will be treated in this chapter. The outdoor periodic temperature process is illustrated in Figure 4.3. This temperature process has been discussed in Section 7.1 for a rectangular house. There are six length parameters in the problem: L, B, H, d, d_w, and the periodic penetration depth d_0. Thus the periodic heat loss factor will depend on five dimensionless parameters. If the thermal resistance at the ground surface is accounted for ($d_1 \neq 0$), the heat loss factor will depend on one further parameter.

The use of the edge approximation discussed in Section 7.1 reduces the number of parameters. Figure 17.1 shows the edge problem. The periodic edge heat loss is denoted by q_p (W/m). The heat loss factor for the edge heat loss will depend on the four parameters H, d, d_w and d_0. The number of dimensionless parameters is reduced from five to three. The periodic heat loss Q_p (W) for the whole cellar becomes according to (7.3-4):

$$Q_p(t) \approx L_e \cdot q_p(t) \qquad d_0 < L_{min}/2 \tag{17.1}$$

Here L_e is the perimeter length of the building. For a rectangular house it is $2L + 2B$. The length L_{min} is the minimum dimension of the foundation in the horizontal plane. For a rectangular house it is B.

In general we will only treat the case where the thermal resistance at the ground surface is neglected ($d_1 = 0$). However, the basic case in Section 17.2.1 takes d_1 into consideration. An approximate correction factor for the thermal resistance at the ground surface is given separately in Section 17.7.

17.1 HEAT LOSS FACTOR FOR AN EDGE

The periodic edge heat loss problem is shown in Figure 17.1. The problem contains the lengths H, d, d_w and d_0. The following formula for the edge heat loss q_p (W/m) is obtained from the scaling in Section 5.2:

$$q_p(t) = \Re/\Im\left\{-\lambda T_1 \cdot h_p(d/d_0, d_w/d_0, H/d_0) \cdot e^{2\pi i t/t_0}\right\} \tag{17.2}$$

The slab on the ground is a special case of a cellar where $H/d_0 = 0$. For the case with a thermal resistance at the ground surface the heat loss factor depends on one further parameter, for instance d_1/d_w.

For a sinusoidal temperature variation, $T_1 \cdot \sin(2\pi t/t_0)$, at the ground surface we get the heat loss q_p from the imaginary part of (17.2). Combining (17.1) and (17.2) we get:

$$Q_p(t) \approx -\lambda T_1 L_e \cdot |h_p| \cdot \sin(2\pi(t/t_0 - \phi_p)) \qquad \phi_p = -\frac{1}{2\pi}\arg(h_p) \tag{17.3}$$

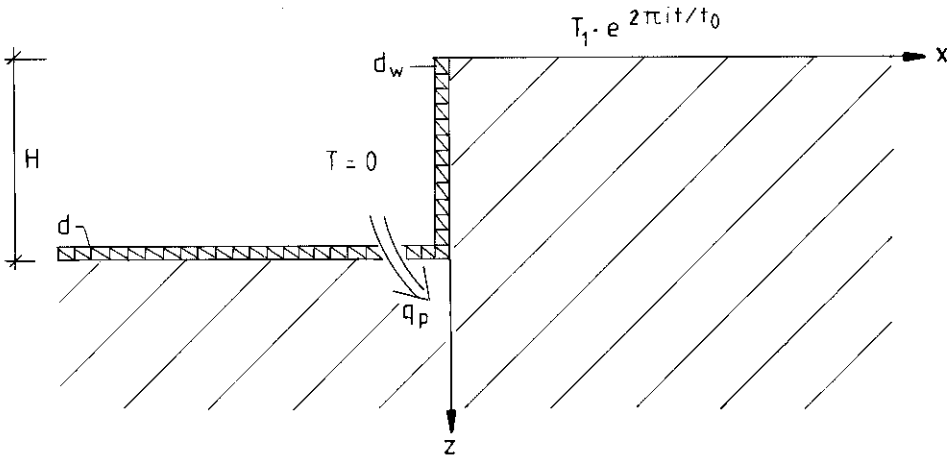

Figure 17.1: Periodic heat loss at the edge of a cellar.

The periodic heat loss factor h_p has been calculated numerically for a few cases. The results are given in Table 17.1. The last four heat loss factors in the table concern the reference cases.

d/d_0	d_w/d_0	H/d_0	$\|h_p\|$	ϕ_p
0	1/2	1/2	0.82	0.057
0	1	1/2	0.64	0.070
0	2	1/2	0.53	0.081
0	4	1/2	0.48	0.091
0	∞	1/2	0.42	0.10
0	∞	1/4	0.61	0.062
0	∞	1	0.22	0.18
0	∞	2	0.072	0.34
1/2	1/2	1/2	0.63	0.053
1	1	1/2	0.38	0.064
3/2.74	3/2.74	2/2.74	0.39	0.067
0	6/2.74	2/2.74	0.45	0.099
1/2.74	1/2.74	2/2.74	0.85	0.049
0	3/2.74	2/2.74	0.58	0.081

Table 17.1: A few numerically calculated heat loss factors h_p for the edge problem, (17.2).

Example 17.1:

The periodic heat loss for reference cases D and E are calculated below. The data for the reference cases are given in Section 1.7. We get:

$d_0 = 2.74$ m $\quad H/d_0 = 2/2.74$
$\lambda T_1 = 15$ W/m

For reference cases D1, D2 and D3 we have:

$L_e = 40$ m

For case D1 we get:

$d = 3$ m $\quad d/d_0 = 3/2.74$
$d_w = 3$ m $\quad d_w/d_0 = 3/2.74$

From Table 17.1 we get :

$|h_p| \approx 0.39 \qquad \phi_p \approx 0.067$

The amplitude of the periodic heat loss becomes:

$\lambda T_1 |h_p| \cdot L_e \approx 15 \cdot 0.39 \cdot 40 = 234$ W

The heat loss becomes:

$Q_p(t) \approx -234 \cdot \sin(2\pi(t/t_0 - 0.067))$ W

For case D2 we get:

$d = 0$ m $\quad d/d_0 = 0$
$d_w = 6$ m $\quad d_w/d_0 = 6/2.74$

From Table 17.1 we get:

$|h_p| \approx 0.45 \qquad \phi_p \approx 0.099$

The amplitude of the periodic heat loss becomes:

$\lambda T_1 |h_p| \cdot L_e \approx 15 \cdot 0.45 \cdot 40 = 270$ W

The heat loss becomes:

$Q_p(t) \approx -270 \cdot \sin(2\pi(t/t_0 - 0.099))$ W

For case D3 we get:

$d = 1$ m $\quad d/d_0 = 1/2.74$
$d_w = 1$ m $\quad d_w/d_0 = 1/2.74$

From Table 17.1 we get :

$|h_p| \approx 0.85 \qquad \phi_p \approx 0.049$

The amplitude of the periodic heat loss becomes:

$\lambda T_1 |h_p| \cdot L_e \approx 15 \cdot 0.85 \cdot 40 = 510$ W

The heat loss becomes:

$Q_p(t) \approx -510 \cdot \sin(2\pi(t/t_0 - 0.049))$ W

For reference cases E1 and E2 we have:

$L_e = 90$ m

For case E1 we get:

$d = 3$ m $\qquad d/d_0 = 3/2.74$
$d_w = 3$ m $\qquad d_w/d_0 = 3/2.74$

From Table 17.1 we get:

$|h_p| \approx 0.39 \qquad \phi_p \approx 0.067$

The amplitude of the periodic heat loss becomes:

$\lambda T_1 |h_p| \cdot L_e \approx 15 \cdot 0.39 \cdot 90 = 526$ W

The heat loss becomes:

$Q_p(t) \approx -526 \cdot \sin(2\pi(t/t_0 - 0.067))$ W

For case E2 we get:

$d = 0$ m $\qquad d/d_0 = 0$
$d_w = 3$ m $\qquad d_w/d_0 = 3/2.74$

From Table 17.1 we get:

$|h_p| \approx 0.58 \qquad \phi_p \approx 0.081$

The amplitude of the periodic heat loss becomes:

$$\lambda T_1 |h_p| \cdot L_e \approx 15 \cdot 0.58 \cdot 90 = 783 \text{ W}$$

The heat loss becomes:

$$Q_p(t) \approx -783 \cdot \sin(2\pi(t/t_0 - 0.081)) \text{ W}$$

It is interesting to compare the heat loss for a slab and a cellar with the same insulation thickness. Reference cases A and D1 both have the equivalent insulation thickness $d = d_w = 3$ m. The amplitude for the slab is 144 W, while it is 234 W for the cellar case. The heat loss is 62 % higher for the cellar.

Our periodic edge heat loss problem, shown in Figure 17.1, depends on three dimensionless parameters. A large numbers of time-dependent calculations must be done in order to cover all combinations of parameters. Therefore no complete tables or diagrams will be given for the heat loss factor. However, a general approximation of the heat loss factor will be given in Section 17.6. It is based on a few basic solutions. The first one gives the heat loss for an infinitely deep cellar. This case gives the heat flow through the wall. The second basic solution treats the heat loss through the floor. We neglect the heat flow in the horizontal direction for the ground region outside the house, $0 < z < H$. The soil layer is considered as a complex-valued thermal resistance. The formulæ for the slab, derived in Chapter 9, are then used for the heat loss through the floor. With these two basic solutions an approximation for deep cellars is given in Section 17.4. For shallow cellars a superposition technique similar to the one presented for the steady-state case in Section 16.4 is used. The results are given in Section 17.5. General formulæ for deep and shallow cellars, as well as cellars of an intermediate depth, are given in Section 17.6.

17.2 INFINITELY DEEP CELLAR

The special case with a cellar of infinite depth is studied in a supplementary report, [3]. The heat flow region becomes a quadrant with the wall along the z-axis. See Figures 6.10 and 17.1. Analytical solutions for the heat loss and the temperature in the ground are given. Some of the results are presented here. The heat loss for an infinitely deep cellar will be denoted by q_p^i (infinite). The corresponding heat loss factor is denoted by h_p^i. We will consider the case with a thermal resistance at the ground surface ($d_1 \neq 0$). The problem contains the three lengths d_w, d_1 and d_0. It is of course independent of H. We have:

$$q_p^i(t) = \Re/\Im \left\{ -\lambda T_1 \cdot h_p^i(d_w/d_0, d_1/d_w) \cdot e^{2\pi i t/t_0} \right\} \tag{17.4}$$

The heat flow over the upper part of the infinitely deep cellar wall is of interest. The heat loss over the wall segment $x = 0, 0 < z < H$ of an infinitely deep cellar is denoted by q_p^w (wall). The corresponding heat loss factor is denoted by h_p^w. For this case the thermal problem again depends on the length H. We consider the case $d_1 = 0$ only. We get:

$$q_p^w(t) = \Re/\Im \left\{ -\lambda T_1 \cdot h_p^w(d_w/d_0, H/d_0) \cdot e^{2\pi i t/t_0} \right\} \tag{17.5}$$

17.2.1 HEAT LOSS FACTOR

The heat loss factor h_p^i for a cellar of infinite depth is obtained from Formula 3.28 in [3]:

$$h_p^i(d_w/d_0, d_1/d_w) = \frac{1}{2i d_w d_1/d_0^2 - d_1/d_w - d_w/d_1}\left\{1 - 2\frac{d_1}{d_w}h_p^0(d_1/d_0) - 2\frac{d_w}{d_1}h_p^0(d_w/d_0)\right\}$$

$$h_p^0(d_w/d_0) = \frac{1}{2\pi r}\ln\left(\frac{1+r}{1-r}\right) \qquad r = \sqrt{1 - 2i(d_w/d_0)^2} \tag{17.6}$$

The heat loss factor is shown in Figure 17.2. The basic heat loss factor h_p^0 is the same one that was used in Chapter 9. It is given by Figure 9.3. For the special case $d_1 = 0$ we get the following formula:

$$h_p^i(d_w/d_0, 0) = 2 \cdot h_p^0(d_w/d_0) \tag{17.7}$$

The formula shows something very interesting. The heat loss is exactly twice as large as for the corresponding case with a slab on the ground, see Section 9.1. The heat conduction region for the cellar case can be described as a wedge of angle $\pi/2$, and for the slab a wedge of angle π. The heat loss is doubled when the angle is halved.

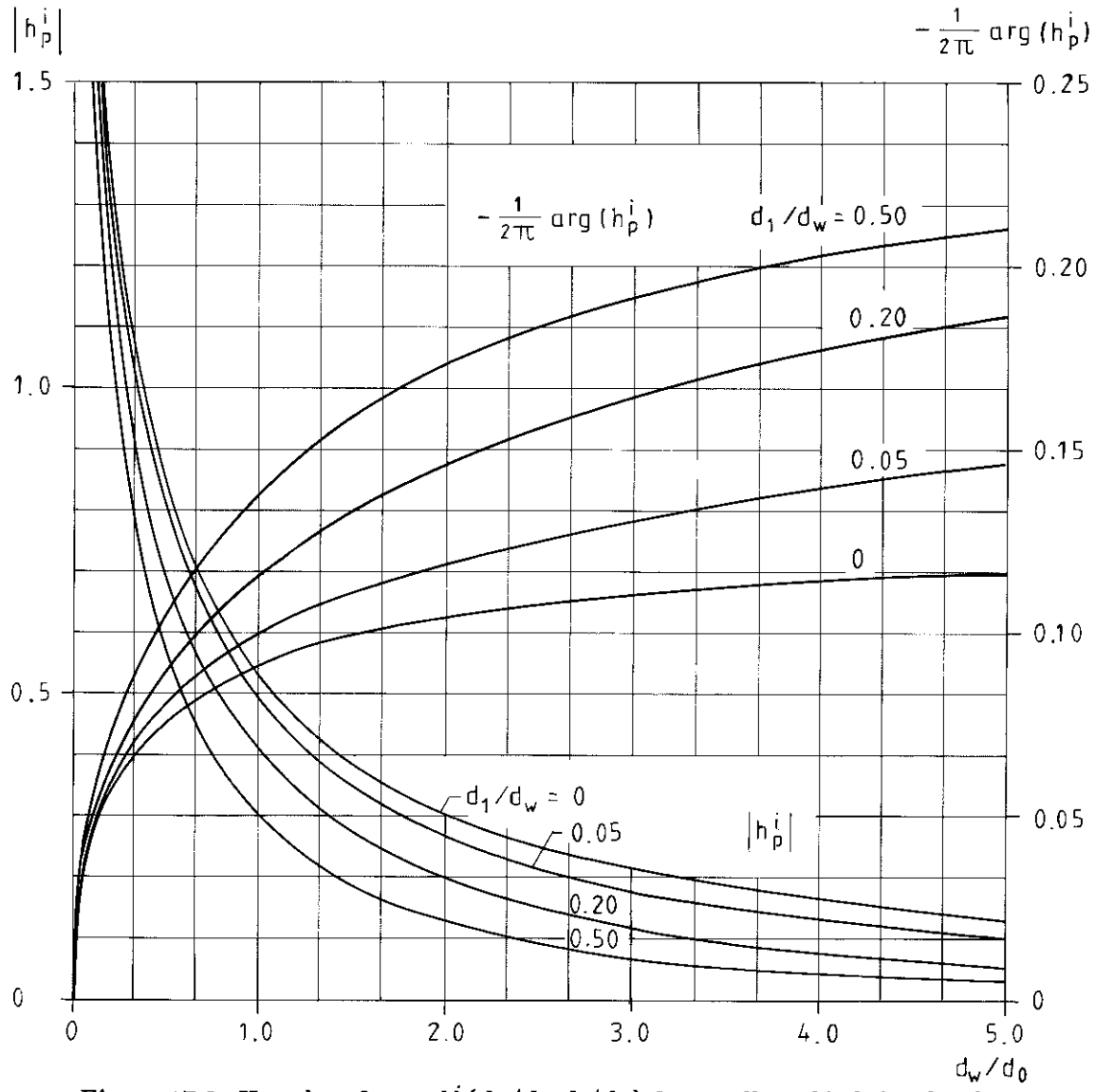

Figure 17.2: Heat loss factor $h_p^i(d_w/d_0, d_1/d_w)$ for a cellar of infinite depth.

17.2.2 HEAT LOSS FACTOR FOR A WALL SEGMENT

The analytical solution for the integrated heat flow over the wall segment $x = 0, 0 < z < H$ for the case $d_1 = 0$ is given by Formula 3.30 in [3]. We have:

$$h_p^w(d_w/d_0, H/d_0) = 2 \cdot h_p^0(d_w/d_0) - \frac{2}{\sqrt{\pi}} \int_0^\infty e^{-s^2(2id_w^2/d_0^2-1)-H^2/(4s^2d_w^2)} \operatorname{erfc}(s)\, ds \quad (17.8)$$

The integral is evaluated numerically and the heat loss factor is shown in Figure 17.3.

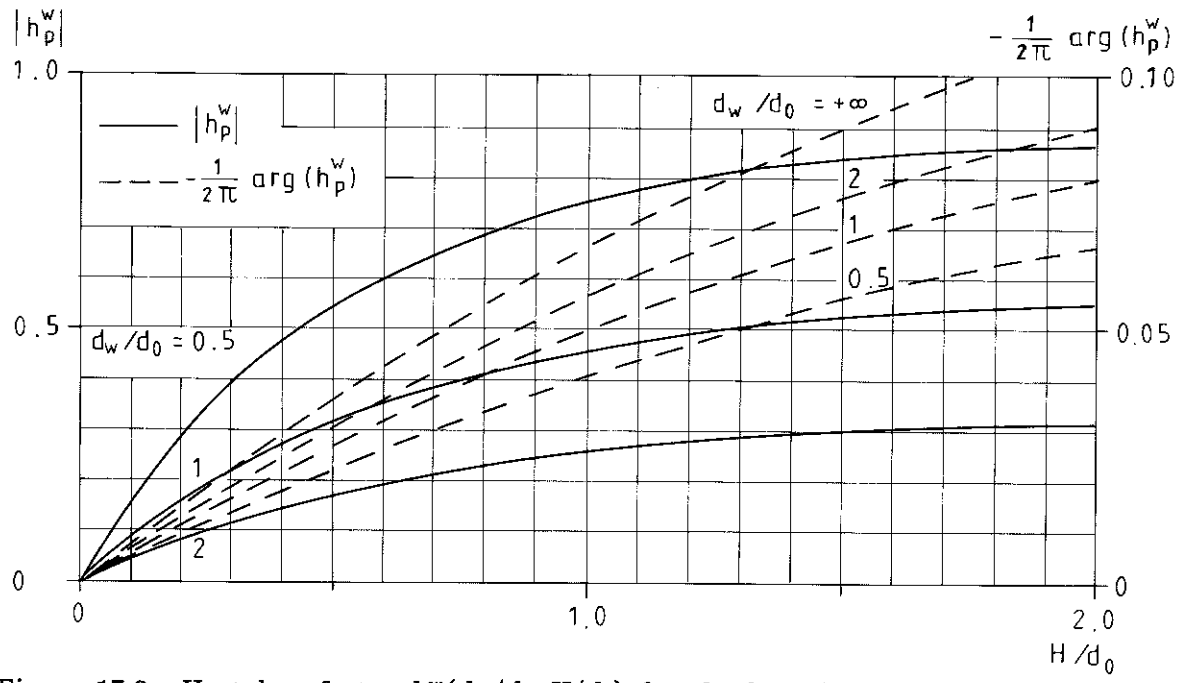

Figure 17.3: Heat loss factor $h_p^w(d_w/d_0, H/d_0)$ for the heat loss over the wall segment $x = 0, 0 < z < H$ for a cellar of infinite depth ($d_1 = 0$).

Figure 17.4 shows h_p^w in the complex plane as a function of d_0/H for a fixed d_w/H. For $d_0/H \gg 1$ the heat loss factor is real-valued. This means that there is no time-delay between the outdoor temperature and the heat loss through the wall segment. The local temperature process in the region around this wall segment is quasi-stationary. For the example in Figure 17.4 this quasi-stationary process is approximately reached for $d_0/H > 2.0$

17.3 HEAT FLOW THROUGH THE FLOOR

The heat loss formulæ for the slab are used in this section in order to get an approximate formula for the heat loss through the floor. The layer of soil of thickness H outside the cellar is treated as a thermal insulation. The soil introduces a phase-delay. The soil is therefore given by a complex-valued thermal resistance.

We neglect the horizontal heat flow component in the layer $0 < z < H, 0 < x < \infty$. We get for each x a one-dimensional periodic heat flow process in the layer $0 < z < H$. The formulæ of Section 3.1.2 are applicable. The amplitude of the periodic variation is T_1 at $z = 0$, and $\hat{T}(x, H)$ at $z = H$. See left part in Figure 17.5. The heat flow through the two boundaries of the layer is given by (3.10). The variables are replaced by the present ones:

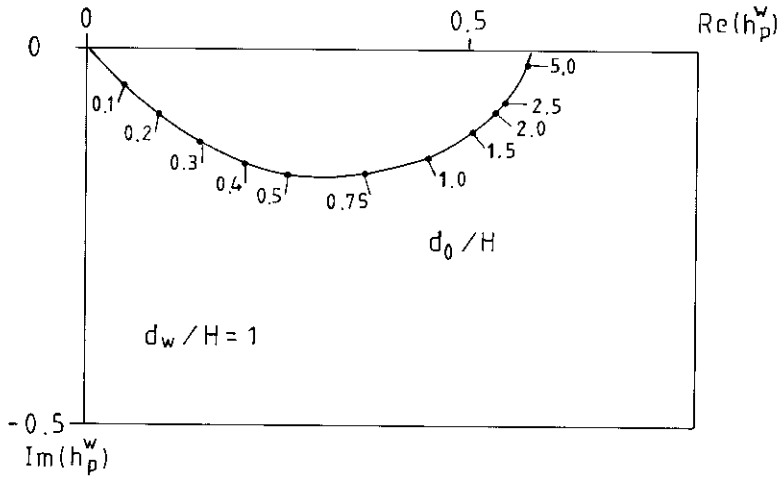

Figure 17.4: Heat loss factor $h_p^w(d_w/d_0, H/d_0)$ in the complex plane. The parameter d_0/H is varying, while d_w/H is fixed ($d_1 = 0$).

$d_i \to H, \lambda_i \to \lambda, d_{i0} \to d_0, x \to z$. The results in Section 3.1.2 are given in a real-valued form. The complex-valued solutions are given inside the brackets with the factor $e^{2\pi i t/t_0}$ excluded. The heat flow at $z = H$ in z-direction is: $-\lambda \partial \hat{T}/\partial z(x, H)$. It corresponds to the complex-valued form of $q_p(H, t)$ in (3.10). The heat flow can directly be written down by the use of superposition. The first part has the temperature T_1 at $z = 0$ and zero at $z = H$, and the second one has the temperature $\hat{T}(x, H)$ at $z = H$ and zero at $z = 0$. The resulting heat flow through the boundary $z = H$ is obtained from the two formulæ in (3.10):

$$-\lambda \frac{\partial \hat{T}}{\partial z}(x, H) = T_1 \frac{(1+i)\lambda}{d_0} \frac{1}{\sinh((1+i)H/d_0)}$$
$$- \hat{T}(x, H) \frac{(1+i)\lambda}{d_0} \coth((1+i)H/d_0) \tag{17.9}$$

This formula may be written in the following way:

$$\frac{T_1}{\cosh((1+i)H/d_0)} = \hat{T}(x, H) - \hat{H} \cdot \frac{\partial \hat{T}}{\partial z}(x, H) \tag{17.10}$$

Here we have introduced the *complex-valued thermal resistance* $\hat{H}$ for the soil layer $0 < z < H$:

$$\hat{H} = \frac{d_0}{1+i} \tanh((1+i)H/d_0) \tag{17.11}$$

Formula (17.10) is compared with equation (4.46) for the boundary condition at the ground surface. The outdoor temperature T_1 is replaced by $T_1/\cosh((1+i)H/d_0)$, and the equivalent insulation thickness d_1 at the ground surface is replaced by $\hat{H}$. This thermal problem is shown in the right part of Figure 17.5.

The thermal problem illustrated in Figure 17.5 contains the lengths H, d and d_0. The parameter d_w for the thermal insulation of the wall vanishes. The heat loss is denoted by q_p^f (floor). The heat loss factor is denoted by h_p^f and depends on two dimensionless parameters. We get:

$$q_p^f(t) = \Re/\Im\left\{-\lambda T_1 \cdot h_p^f(d/d_0, H/d_0) \cdot e^{2\pi i t/t_0}\right\} \tag{17.12}$$

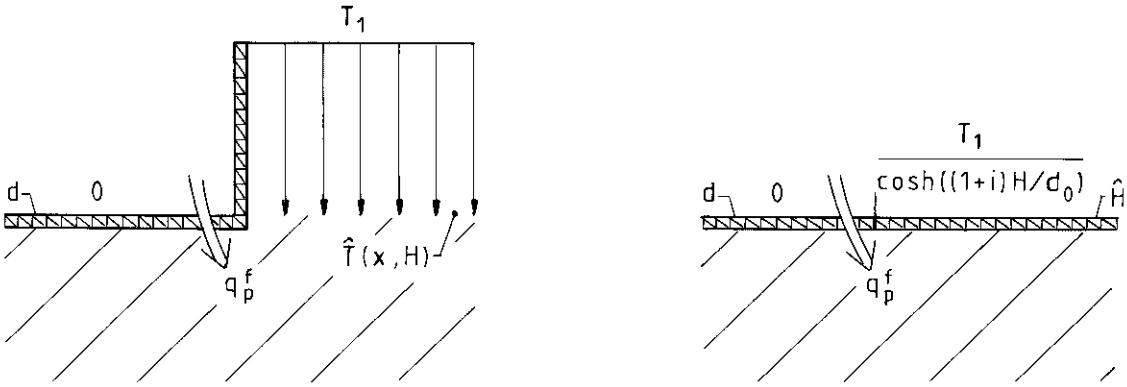

Figure 17.5: The left figure illustrates the one-dimensional heat flow in the region $0 < x < \infty, 0 < z < H$. In the right figure this layer is treated as a complex-valued surface resistance $\hat{H}$. The outdoor temperature amplitude T_1 is replaced by $T_1/\cosh((1+i)H/d_0)$.

The heat loss for the problem may be obtained with the use of the formulæ for the slab given by (9.6). The insulation length d_1 is substituted by $\hat{H}$, and the amplitude T_1 is increased by the factor $T_1/\cosh((1+i)H/d_0)$. The heat loss through the floor becomes:

$$h_p^f(d/d_0, H/d_0) = \frac{1}{\cosh((1+i)H/d_0)}\left(\frac{d}{d-\hat{H}}h_p^0(d/d_0) + \frac{\hat{H}}{\hat{H}-d}h_p^0(\hat{H}/d_0)\right) \tag{17.13}$$

We get a simpler expression for h_p^f in the special case $d = 0$:

$$h_p^f(0, H/d_0) = \frac{1}{\cosh((1+i)H/d_0)} \cdot h_p^0(\hat{H}/d_0) = \frac{1}{2\pi}\ln\left(\frac{\cosh((1+i)H/d_0)+1}{\cosh((1+i)H/d_0)-1}\right) \tag{17.14}$$

The function $h_p^f(0, H/d_0)$ is given in Figure 17.6.

The heat loss factor h_p^f may be used as an approximation for the case with a totally insulated wall. We get for the heat loss factor in (17.2):

$$h_p^f \approx h_p(d/d_0, \infty, H/d_0) \tag{17.15}$$

The approximation will underestimate the heat flow through the floor due to the restriction of the heat flow paths.

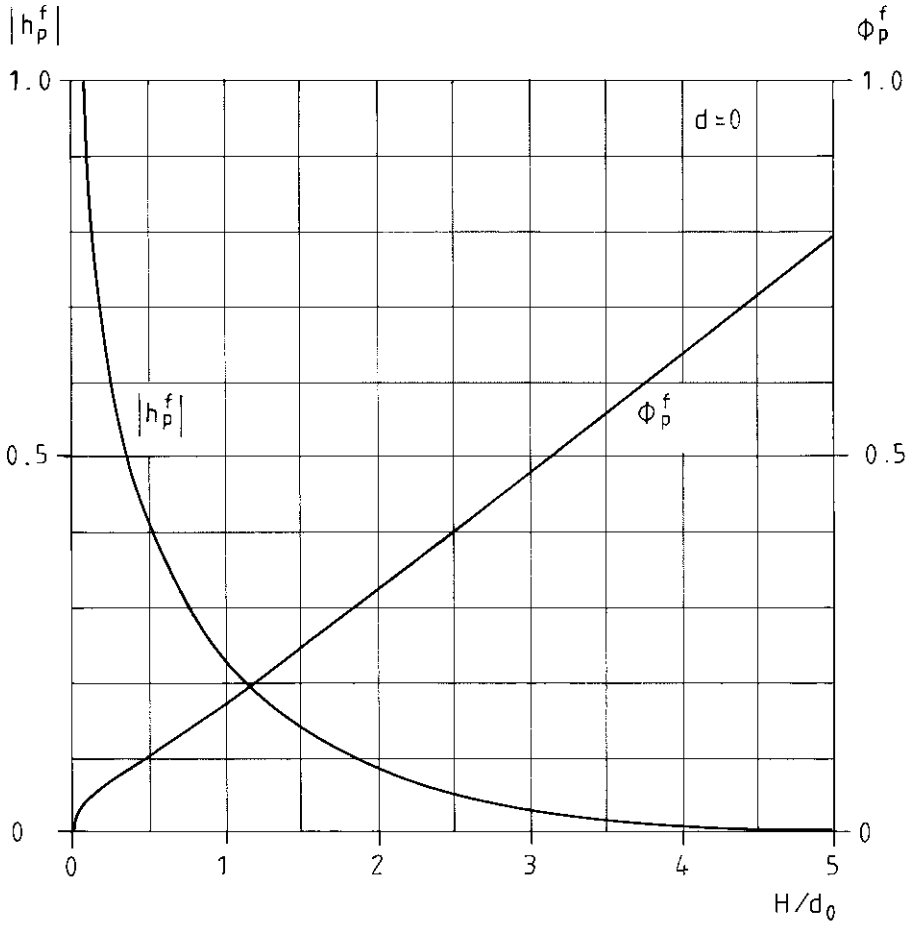

Figure 17.6: The heat loss factor $h_p^f(0, H/d_0)$. The phase ϕ_p^f is given by $-\arg(h_p^f)/2\pi$.

Example 17.2:

We test the approximation (17.15) for the following data:

$H/d_0 = 0.25 \qquad d_w/d_0 = \infty \qquad d/d_0 = 0$

From Figure 17.6 we get:

$|h_p^f| \approx 0.60 \qquad \phi_p^f \approx 0.067$

The direct numerical calculation gives according to Table 17.1:

$|h_p| \approx 0.61 \qquad \phi_p \approx 0.062$

Another set of data occurring in Table 17.1 is:

$H/d_0 = 0.5 \qquad d_w/d_0 = \infty \qquad d/d_0 = 0$

From Figure 17.6 we get:

$|h_p^f| \approx 0.41 \qquad \phi_p^f \approx 0.099$

The numerical calculation gives according to Table 17.1:

$|h_p| \approx 0.42 \qquad \phi_p \approx 0.10$

The error in the absolute value for the approximation (17.15) for the cases in Example 17.2 is less than 3%. The error is less than 8% for the phase. We see that the slab approximation gives an underestimation of the absolute value of the heat loss factor as expected, and that the phase-delay is too large. The real heat flow takes a shorter way than the approximated one, and thus it is larger and has less phase delay. The last case in Example 17.2 is an exception concerning the phase. It is probably caused by insufficient accuracy in the numerical calculation.

17.4 APPROXIMATION FOR DEEP CELLARS

It is shown in Section 6.4.1 that the temperature amplitude at the wall at the depth $z = d_0$ is damped to at least 37% of the amplitude at the ground surface. For deep cellars ($H/d_0 \gg 1$) the main part of the temperature influence from the ground surface is located at a depth less than H. The temperature at the cellar wall is approximately the same as for the infinitely deep cellar. A good approximation of the heat loss through wall is therefore given by the heat loss formula for a wall segment, (17.8). In order to account for the heat loss through the floor, which is small for deep cellars, we add the floor heat loss derived in Section 17.3, (17.13). We get the following approximate heat loss formula for *deep cellars*:

$$h_p(d/d_0, d_w/d_0, H/d_0) \approx h_p^f(d/d_0, H/d_0) + h_p^w(d_w/d_0, H/d_0) \tag{17.16}$$

The heat loss factor $h_p^f(d/d_0, H/d_0)$ is given by Figure 17.6 for the case $d = 0$. For $d \neq 0$ Figure 9.3 must also be used. The heat loss factor $h_p^w(d_w/d_0, H/d_0)$ is given by Figure 17.3.

Example 17.3:

Formula 17.16 is tested for the reference cases. For these cases we have $H/d_0 = 2/2.74$. The numerically calculated heat loss factors from Table 17.1 are also given in the table .

	(17.16)		Table 17.1	
Case	$\lvert h_p \rvert$	ϕ_p	$\lvert h_p \rvert$	ϕ_p
D1	0.41	0.067	0.39	0.067
D2	0.50	0.095	0.45	0.099
D3	0.90	0.052	0.85	0.049
E1	0.41	0.067	0.39	0.067
E2	0.65	0.080	0.58	0.081

The maximum error is about 10% for the reference cases using (17.16). The error is probably not that big. The error in the numerical calculation is in the range of 5-10%, i.e. the numerical value is 5-10% too small. The actual error in the approximation is therefore estimated to 5%.

17.5 APPROXIMATION FOR SHALLOW CELLARS

Let us now consider the heat loss for a shallow cellar ($H/d_0 \ll 1$). A superposition technique, analogous to the one presented in Section 16.4, is used in this section. From (4.28) the ground temperature can be written as:

$$T_p(x,z) = \Re/\Im\left\{\hat{T}(x,z) \cdot e^{2\pi i t/t_0}\right\} \tag{17.17}$$

Here $\hat{T}(x,z)$ is a complex-valued temperature. The heat conduction equation for $\hat{T}$ is obtained from (4.44), and the boundary conditions from (4.46). The temperature is equal to T_1 at the ground surface. The temperature $\hat{T}$ will be obtained from a superposition of two temperature fields $\hat{T}_1(x,z)$ and $\hat{T}_2(x,z)$. Figure 17.7 shows the superposition. The wall is totally insulated ($d_w = \infty$) for the first part $\hat{T}_1(x,z)$. The outdoor temperature is attributed to the first part. The second, residual temperature $\hat{T}_2(x,z)$ is zero at the ground surface and above the floor insulation. The temperature inside the wall insulation is equal to $-\hat{T}_1$. Here $\hat{T}_1$ is the ground temperature at the outside of the wall.

The temperature $\hat{T}_1$ takes care of the main part of the heat flow through the floor. The second, residual temperature field $\hat{T}_2$ takes care of the heat flow through the wall. The edge heat loss becomes:

$$q_p(t) = q_{p1}(t) + q_{p2}(t)$$

$$q_{p1}(t) = \Re/\Im\left\{-\lambda T_1 \cdot h_{p1} \cdot e^{2\pi i t/t_0}\right\} \quad q_{p2}(t) = \Re/\Im\left\{-\lambda T_1 \cdot h_{p2} \cdot e^{2\pi i t/t_0}\right\} \tag{17.18}$$

It is reasonable to approximate the heat loss factor h_{p1} by h_p^f from (17.13). The boundary condition of zero heat flux at the wall is satisfied. However, the heat conduction in the region $0 < z < H$ is simplified. We have:

$$h_{p1} \approx h_p^f \tag{17.19}$$

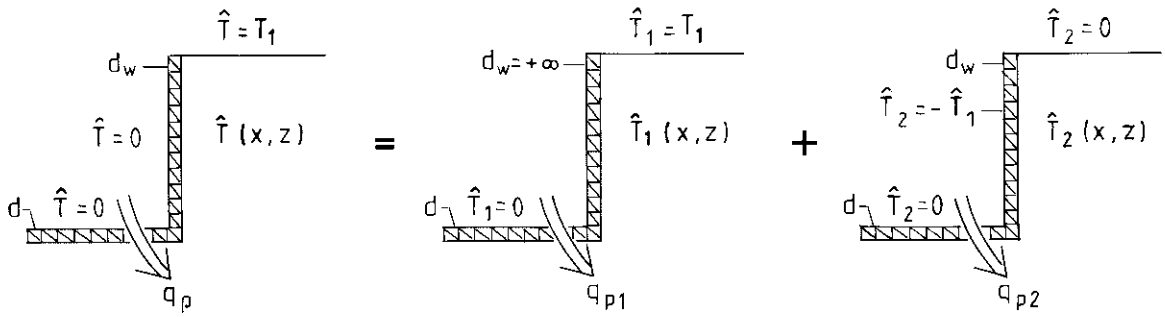

Figure 17.7: Superposition of the temperature field $\hat{T}_1$ for a cellar edge with a totally insulated wall and the residual temperature field $\hat{T}_2$ in order to get the temperature for the original problem shown in the left figure.

This approximation was also given in (17.15). It was tested in Example 17.2, where it gave small errors (for the examples presented).

For shallow cellars ($H/d_0 \ll 1$) the local temperature process at the cellar wall is approximately the same as the steady-state one except for the time-dependent factor $e^{2\pi i t/t_0}$. This was shown in a similar problem studied in Section 17.2.2. A formula for the heat flow over a wall segment $x = 0, 0 < z < H$ for a cellar of infinite depth is given. The heat loss factor for this problem is shown in a complex representation in Figure 17.4. For small values of H/d_0 the heat loss factor becomes real-valued. It tends to a corresponding steady-state heat loss factor.

The whole temperature field $\hat{T}_2(x, z)$ is located to the cellar edge region. It has virtually vanished at a distance d_0 from the cellar wall. The local thermal process around the wall is approximately given by the steady-state conduction equation with the actual outdoor temperature. Thus it coincides with the temperature $T_2(x, z)$ (where $T_i = 0$ and $T_0 = T_1$) studied in Section 16.4.1. We get the same heat loss factor for h_{p2} as h_{s2}:

$$h_{p2} \approx h_{s2} \tag{17.20}$$

This steady-state heat loss factor is given by Figure 16.7.

The heat flow q_{p2} does not only account for the heat loss through the wall. It also contains a counter-flow through the floor. The contributions from q_{p1} and q_{p2} to the total heat loss through the floor have opposite signs. Thus, an approximation of the heat loss through the floor that is given by q_{p1} only becomes an overestimation.

We get the following approximate heat loss formula for *shallow cellars*:

$$h_p(d/d_0, d_w/d_0, H/d_0) \approx h_p^f(d/d_0, H/d_0) + h_{s2}(d/H, d_w/H) \tag{17.21}$$

The heat loss factor $h_p^f(d/d_0, H/d_0)$ is given by (17.13). It is given by Figure 17.6 for the case $d = 0$. For $d \neq 0$, Figure 9.3 must also be used. The heat loss factor h_{s2} is given by Figure 16.7. The formula is tested for the reference cases in Examples 17.4-5.

Example 17.4:

Formula 17.21 is tested for the reference cases. For these cases we have $H/d_0 = 2/2.74$. The absolute value $|h_p|$ and phase ϕ_p are given in the table below. The numerically calculated heat loss factors from Table 17.1 are also given.

	(17.21)		Table 17.1	
Case	$\lvert h_p \rvert$	ϕ_p	$\lvert h_p \rvert$	ϕ_p
D1	0.42	0.030	0.39	0.067
D2	0.44	0.085	0.45	0.099
D3	0.83	0.027	0.85	0.049
E1	0.42	0.030	0.39	0.067
E2	0.56	0.065	0.58	0.081

A comparison with the table in Example 17.3 shows that the amplitudes of the heat loss factor are better predicted by (17.21) than (17.16), but the error in the phase is larger.

Example 17.5:

We have also tested Formula 17.21 on the case $H/d_0 = 0.5$, $d_w/d_0 = 0.5$ and $d/d_0 = 0$. The approximation gives:

$$|h_p| \approx 0.79 \qquad -\tfrac{1}{2\pi}\arg(h_p) \approx 0.05 \quad \text{(approximation(17.21))}$$

A numerical calculation, Table 17.1, gives:

$$|h_p| \approx 0.82 \qquad -\tfrac{1}{2\pi}\arg(h_p) \approx 0.06 \quad \text{(numerical calculation)}$$

The error for this case is less than 4 % for the amplitude and less than 12 % for the phase.

17.6 GENERAL APPROXIMATION FOR Q_p

In this Section we will summarize the outdoor periodic heat loss formulæ for the cellar. The edge approximation for the heat loss gives:

$$Q_p(t) \approx q_p(t) \cdot L_e \qquad d_0 < L_{min}/2$$

$$q_p(t) = \Re/\Im\left\{-\lambda T_1 \cdot h_p(d/d_0, d_w/d_0, H/d_0) \cdot e^{2\pi i t/t_0}\right\} \tag{17.22}$$

Here L_e is the perimeter length of the building. For a rectangular house it is $2L + 2B$. The length L_{min} is the minimum dimension of the foundation in the horizontal plane. For a rectangular house it is B.

An approximate formula for h_p may be obtained from the results in Section 17.4-5. We have one approximation for deep cellars and one for shallow cellars. From Examples 17.3-5 we find that $H/d_0 = 0.5$ should be a suitable limit of validity between the two approximations. For the case $H/d_0 \geq 0.5$ we get from (17.16):

$$h_p(d/d_0, d_w/d_0, H/d_0) \approx h_p^f(d/d_0, H/d_0) + h_p^w(d_w/d_0, H/d_0) \quad H/d_0 \geq 0.5 \tag{17.23}$$

$$h_p^f(d/d_0, H/d_0) = \frac{1}{\cosh((1+i)H/d_0)} \left(\frac{d}{d-\hat{H}} h_p^0(d/d_0) + \frac{\hat{H}}{\hat{H}-d} h_p^0(\hat{H}/d_0) \right) \tag{17.24}$$

$$\hat{H} = \frac{d_0}{1+i} \tanh((1+i)H/d_0) \tag{17.25}$$

$$h_p^w = 2 \cdot h_p^0(d_w/d_0) - \frac{2}{\sqrt{\pi}} \int_0^\infty e^{-s^2(2id_w^2/d_0^2-1)-H^2/(4s^2d_w^2)} \mathrm{erfc}(s)\, ds \tag{17.26}$$

The heat loss factor $h_p^f(d/d_0, H/d_0)$ is given by Figure 17.6 for the case $d = 0$. For $d \neq 0$, Figure 9.3 must also be used. The heat loss factor $h_p^w(d_w/d_0, H/d_0)$ is given by Figure 17.3.

For the case $H/d_0 \leq 0.5$ we get from (17.21):

$$h_p(d/d_0, d_w/d_0, H/d_0) \approx h_p^f(d/d_0, H/d_0) + h_{s2}(d/H, d_w/H) \quad H/d_0 \leq 0.5 \tag{17.27}$$

The heat loss factor h_{s2} is given by Figure 16.7.

17.7 CORRECTION FOR SURFACE RESISTANCE

The general formulæ for the periodic heat loss given in Section 17.6 neglect the thermal resistance at the ground surface ($d_1 = 0$). A simple approximation for the correction of the heat loss due to the surface resistance will be presented here. The equivalent insulation thickness at the ground surface is d_1. Let us assume the temperature field near the ground surface is approximately the same as the one in undisturbed ground. The temperature at the ground surface is then, according to (6.23), ($d_3 = d_0$):

$$T_p(x, 0) = \Re/\Im \left\{ T_1 \cdot \frac{1}{1 + (1+i)d_1/d_0} \cdot e^{2\pi i t/t_0} \right\} \tag{17.28}$$

Thus the ground surface temperature amplitude is reduced from T_1 to $T_1/(1 + (1+i)d_1/d_0)$. The approximation of the heat loss factor for the case with a *surface resistance at the ground surface* becomes:

$$h_p \approx \frac{1}{1 + (1+i)d_1/d_0} \cdot h_p|_{d_1=0} \qquad d_1/d_0 \leq 0.2,\ d_1/H \leq 0.2 \tag{17.29}$$

Here $h_p|_{d_1=0}$ is the heat loss factor for the case $d_1 = 0$ given in Section 17.6.

Example 17.6:

Consider the case:

$d_w/d_0 = 1.0 \qquad d_1/d_w = 0.1$

This gives:

$d_1/d_0 = 0.1$

The factor in front of $h_p|_{d_1=0}$ becomes:

$$1/(1+(1+i)\cdot 0.1) = 0.905 \cdot e^{-2\pi i \cdot 0.0144}$$

The surface resistance reduces the heat loss amplitude by 10 %. It causes an extra time delay of $0.0144 \cdot t_0$, which is 5 days for t_0 equal to one year.

Formula (17.6) consider the case with an infinitely deep cellar. It accounts for the thermal resistance at the ground surface. The heat loss factor $h_p^i(d_w/d_0, d_1/d_w)$ is given in Figure 17.2. The heat loss factor for the case with and without a thermal resistance at the ground surface becomes:

$$|h_p^i(1,0)| \approx 0.526 \qquad |h_p^i(1,0.1)| \approx 0.458$$

Using the correction formula (17.29) we get:

$$|h_p^i(1,0.1)| \approx 0.526 \cdot 0.905 = 0.476$$

The error for this example is only 4 %.

Chapter 18

STEP CHANGE OF OUTDOOR TEMPERATURE

The outdoor step-change temperature process for a cellar will be treated in this chapter. It is illustrated in Figure 4.5. The temperature process has been discussed in Section 7.2 for a rectangular house. There are six length parameters in the problem: L, B, H, d, d_w, and the time-dependent $\sqrt{at}$. Thus the step-change heat loss factor will depend on five dimensionless parameters. The heat loss factor will depend on one further parameter, if the thermal resistance at the ground surface is accounted for ($d_1 \neq 0$).

The use of the edge approximation discussed in Section 7.2 reduces the number of parameters. Figure 18.1 shows the edge problem. The step-change edge heat loss is denoted by q_t (W/m). The heat loss factor for the edge heat loss will depend on the four parameters H, d, d_w and $\sqrt{at}$. The number of parameters is reduced from five to three. The step-change heat loss Q_t (W) for the whole cellar becomes according to (7.8-9):

$$Q_t(t) \approx L_e \cdot q_t(t) \qquad \sqrt{at} < L_{min}/2 \tag{18.1}$$

Here L_e is the perimeter length of the building. For a rectangular house it is $2L + 2B$. The length L_{min} is the minimum dimension of the foundation in the horizontal plane. For a rectangular slab it is equal to B.

In general we will only treat the case where the thermal resistance at the ground surface is neglected ($d_1 = 0$). However, the basic case in Section 18.2.1 takes d_1 into consideration.

18.1 HEAT LOSS FACTOR FOR AN EDGE

The step-change heat loss problem for an edge is shown in Figure 18.1. The case with a slab on the ground is a special case where $H = 0$. The problem contains the lengths H, d, d_w and $\sqrt{at}$. The following formula for the edge heat loss q_t (W/m) is obtained from the scaling in Section 5.3:

$$q_t(t) = -\lambda T_2 \cdot h_t(\sqrt{at}/H, d/H, d_w/H) \tag{18.2}$$

For the case with a thermal resistance at the ground surface, the heat loss factor depends on further one parameter, for instance d_1/d_w.

The step-change heat loss factor has been calculated numerically for the reference cases. The results are given in Figure 18.2.

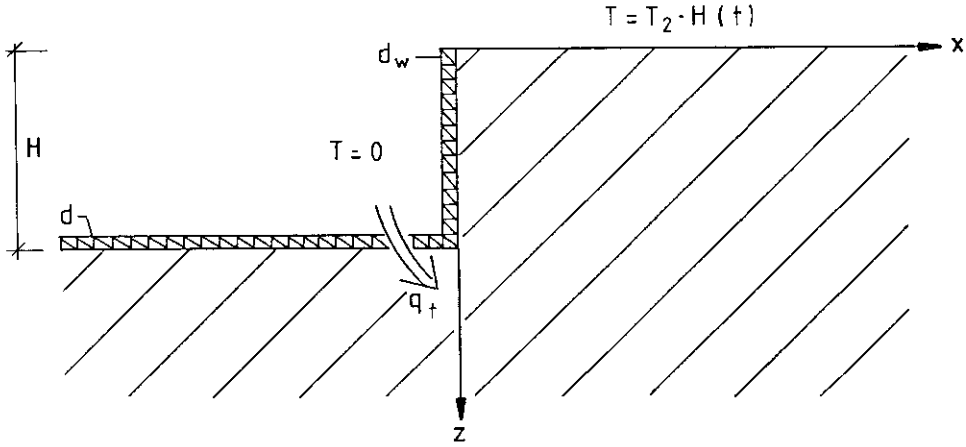

Figure 18.1: Step-change heat loss at the edge of a cellar.

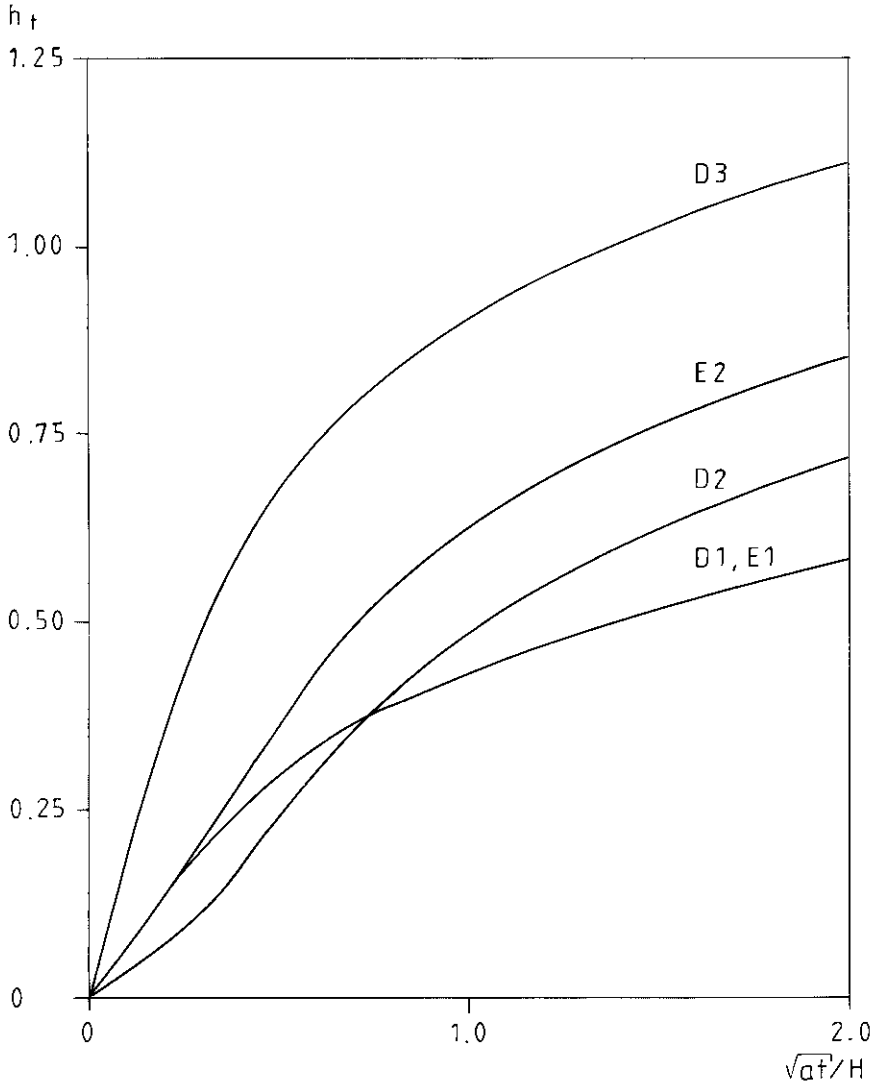

Figure 18.2: Heat loss factors for the reference cases.

Examples 18.1:

The heat loss due to a cold spell for reference case D1 is calculated below. We have the following data:

$d = 3$ m $\quad d_w = 3$ m $\quad H = 2$ m
$a = 0.75 \cdot 10^{-6}$ m^2/s $\quad T_2 = -15$ °C $\quad \lambda = 1.5$ W/mK
$L_e = 40$ m $\quad t_2 = 1$ week

We let the cold spell start at $t = 0$. The cold spell has the duration t_2. The heat loss during the cold spell is, from (18.1-2):

$$Q(t) = -\lambda T_2 \cdot L_e \cdot h_t(\sqrt{at}/H, d/H, d_w/H)$$

The heat loss for a slab due to a temperature pulse is treated in Section 10.3.2. We have similar formulæ for the cellar. The heat loss after the cold spell is obtained by superposition. We have as in (10.23):

$$Q(t) = -\lambda T_2 \cdot L_e \cdot \left\{ h_t(\sqrt{at}/H, d/H, d_w/H) - h_t(\sqrt{a(t-t_2)}/H, d/H, d_w/H) \right\}$$

Let t_d denote the time in days. We get the following formula for the heat loss during the cold spell:

$$Q(t) = 900 \cdot h_t\left(\sqrt{t_d/61.7}, 1.5, 1.5\right)$$

After the cold spell we get:

$$Q(t) = 900 \cdot h_t\left\{\left(\sqrt{t_d/61.7}, 1.5, 1.5\right) - h_t\left(\sqrt{(t_d-7)/61.7}, 1.5, 1.5\right)\right\}$$

The table below gives the heat loss for a few times:

t (days)	0	1	2	4	7	8	14	50
$Q(t)$ (W), case D1	0	82	114	154	198	123	57	14

It is interesting to compare the result for this cellar case with reference case A, which is the corresponding case for a slab on the ground. The insulation thickness of the floor is the same as the floor and wall insulation thickness for case D1. The heat loss for case A is given by Example 10.5. The heat loss for the cellar is approximately twice as large as for the slab. This will be explained in Section 18.2.1.

Example 18.2:

The maximum heat loss for a cold spell occurs at the end of the cold spell. For a cold spell that starts at $t = 0$ and has the duration t_2, we get the heat loss from formulæ (18.1-2). For the reference cases with $T_2 = -15\,°\mathrm{C}$ and t_2=1 week we have:

$$\sqrt{at_2}/H = 0.337 \qquad \lambda T_2 = -22.5 \text{ W/m}$$

For reference cases D1, D2 and D3 we have:

$$L_e = 40 \text{ m}$$

For case D1 we get from Figure 18.2:

$$h_t \approx 0.22$$

The peak heat loss becomes:

$$Q_t(t_2) = -\lambda T_2 h_t \cdot L_e = 22.5 \cdot 0.22 \cdot 40 = 198 \text{ W}$$

For case D2 we get from Figure 18.2:

$$h_t \approx 0.185$$

The peak heat loss becomes:

$$Q_t(t_2) = -\lambda T_2 h_t \cdot L_e = 22.5 \cdot 0.185 \cdot 40 = 166.5 \text{ W}$$

For case D3 we get from Figure 18.2:

$$h_t \approx 0.53$$

The peak heat loss becomes:

$$Q_t(t_2) = -\lambda T_2 h_t \cdot L_e = 22.5 \cdot 0.53 \cdot 40 = 477 \text{ W}$$

For reference cases E1 and E2 we have:

$L_e = 90$ m

For case E1 we get from Figure 18.2:

$h_t \approx 0.22$

The peak heat loss becomes:

$Q_t(t_2) = -\lambda T_2 h_t \cdot L_e = 22.5 \cdot 0.22 \cdot 90 = 445.5$ W

For case E2 we get from Figure 18.2:

$h_t \approx 0.24$

The peak heat loss becomes:

$Q_t(t_2) = -\lambda T_2 h_t \cdot L_e = 22.5 \cdot 0.24 \cdot 90 = 486$ W

18.2 INFINITELY DEEP CELLAR

The special case with a cellar of infinite depth is studied in the supplementary report [3]. The heat flow region becomes a quadrant with the wall along the z-axis. See Figures 6.12 and 18.1. Analytical solutions for the heat loss and the temperature in the ground are given. Some of the results are given here. The heat loss for an infinitely deep cellar will be denoted by q_t^i (infinite). The corresponding heat loss factor is h_t^i. We will consider the case with a thermal resistance at the ground surface. The problem contains the three lengths d_w, d_1 and $\sqrt{at}$. It is of course independent of H. We have:

$$q_t^i(t) = -\lambda T_2 \cdot h_t^i(\sqrt{at}/d_w, d_1/d_w) \tag{18.3}$$

The heat loss over the upper part of the infinitely deep cellar wall is of interest. The heat loss over the wall segment $x = 0, 0 < z < H$ of an infinitely deep cellar is denoted by q_t^w (wall). The corresponding heat loss factor is denoted by h_t^w. For this case the thermal problem again depends on the length H. We consider the case $d_1 = 0$ only. We get:

$$q_t^w(t) = -\lambda T_2 \cdot h_t^w(\sqrt{at}/d_w, H/d_w) \tag{18.4}$$

18.2.1 HEAT LOSS FACTOR

The heat loss factor h_t^i for a cellar of infinite depth is obtained from Formula 4.20 in [3]:

$$h_t^i(\sqrt{at}/d_w, d_1/d_w) = \frac{1}{d_1/d_w + d_w/d_1}\left[e^{at/d_w^2} e^{at/d_1^2} \cdot \operatorname{erfc}\left(\frac{\sqrt{at}}{d_w}\right) \cdot \operatorname{erfc}\left(\frac{\sqrt{at}}{d_1}\right) - 1\right] \tag{18.5}$$

$$+\frac{2}{1+(d_w/d_1)^2} h_t^0(\sqrt{at}/d_1) + \frac{2}{1+(d_1/d_w)^2} h_t^0(\sqrt{at}/d_w)$$

$$h_t^0(\tau) = \frac{1}{\sqrt{\pi}} \int_0^\tau e^{s^2} \cdot \mathrm{erfc}(s)\, ds \tag{18.6}$$

The heat loss factor is shown in Figure 18.3. The basic heat loss factor h_t^0 is the same one that was used in Section 10.1. It is given by Figure 10.2.

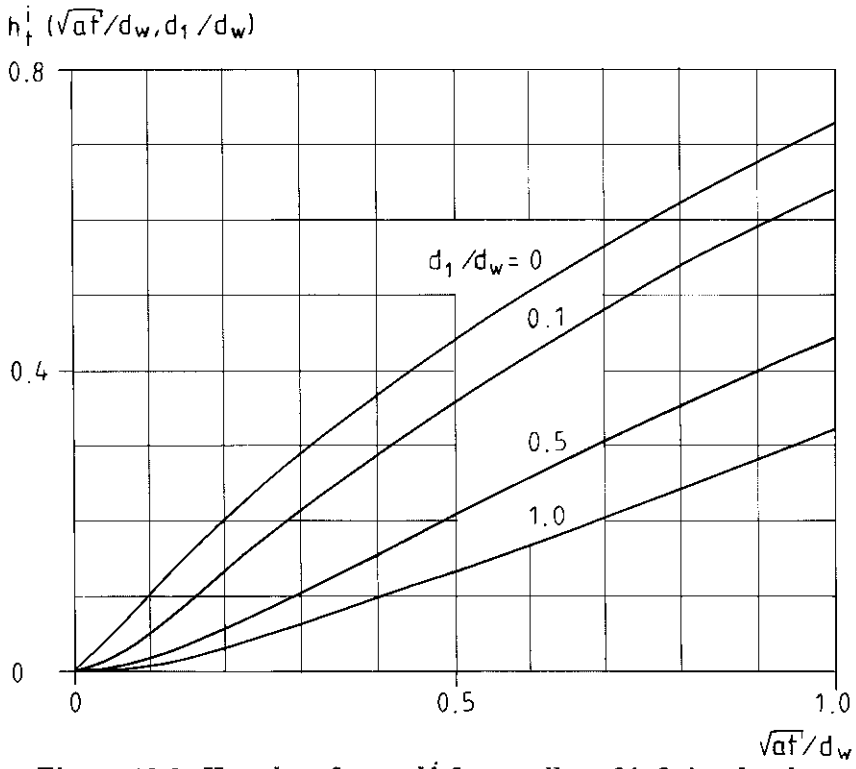

Figure 18.3: Heat loss factor h_t^i for a cellar of infinite depth.

For the special case $d_1 = 0$ we get the following formula:

$$h_t^i = 2 \cdot h_t^0(\sqrt{at}/d_w) \qquad d_1/d_w = 0 \tag{18.7}$$

The formula shows something very interesting. The heat loss becomes twice as large as for the corresponding case with a slab on the ground. See Section 10.1. The heat conduction region for the cellar case can be described as a wedge of angle $\pi/2$, and for the slab a wedge of angle π. For this special case the heat loss is doubled when the angle is halved.

18.2.2 HEAT LOSS FACTOR FOR A WALL SEGMENT

The integrated heat flow over the wall segment $x = 0, 0 < z < H$ for the case $d_1 = 0$ is given by Formula 4.22 in [3]. We have:

$$h_t^w(\sqrt{at}/d_w, H/d_w) = 2 \cdot h_t^0(\sqrt{at}/d_w) - \frac{2}{\sqrt{\pi}} \int_0^{\sqrt{at}/d_w} e^{s^2 - H^2/(4s^2 d_w^2)}\, \mathrm{erfc}(s)\, ds \tag{18.8}$$

This heat loss factor is shown in Figure 18.4. Figure 18.5 shows h_t^w for varying $\sqrt{at}/H$ and a fixed value of d_w/H. For $\sqrt{at}/H > 2$ the steady-state heat loss is approximately obtained. For this case it is equal to 0.58.

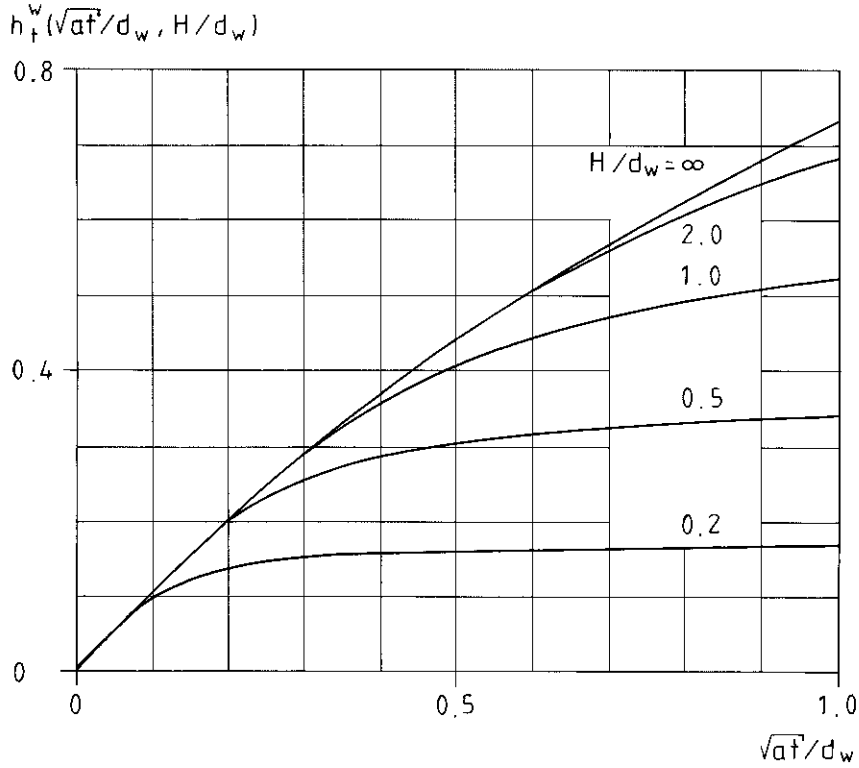

Figure 18.4: Heat loss factor $h_t^w(\sqrt{at}/d_w, H/d_w)$ for the heat loss over the wall segment $x = 0, 0 < z < H$ for $d_1 = 0$.

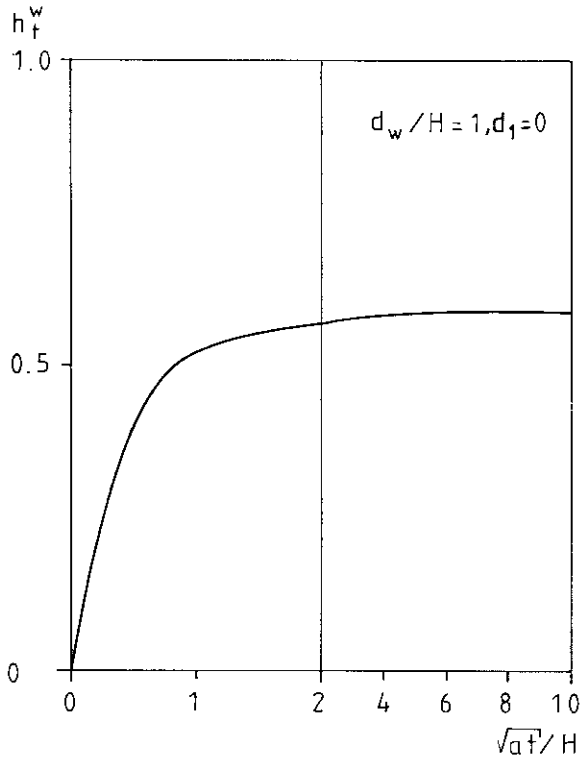

Figure 18.5: Heat loss factor h_t^w for the heat loss over the wall segment $x = 0, 0 < z < H$ for $d_1 = 0$. The parameter $\sqrt{at}/H$ is varying, while d_w/H is fixed.

18.3 HEAT LOSS THROUGH THE FLOOR

The heat loss for a cellar with a totally insulated wall is studied in this section (Figure 18.1 with $d_w = \infty$). We will get approximate formulæ for the heat loss through the floor. The heat loss will be denoted by q_{t1} (W/m), and the corresponding heat loss factor is denoted by h_{t1}. This notation will be used later in Section 18.5 (Figure 18.8). The thermal problem contains the lengths H, d and $\sqrt{at}$. The parameter d_w for the thermal insulation of the wall vanishes. We get:

$$q_{t1}(t) = -\lambda T_2 \cdot h_{t1}(\sqrt{at}/H, d/H) \tag{18.9}$$

The heat loss factor h_{t1} has been calculated numerically. It is given in Figure 18.6.

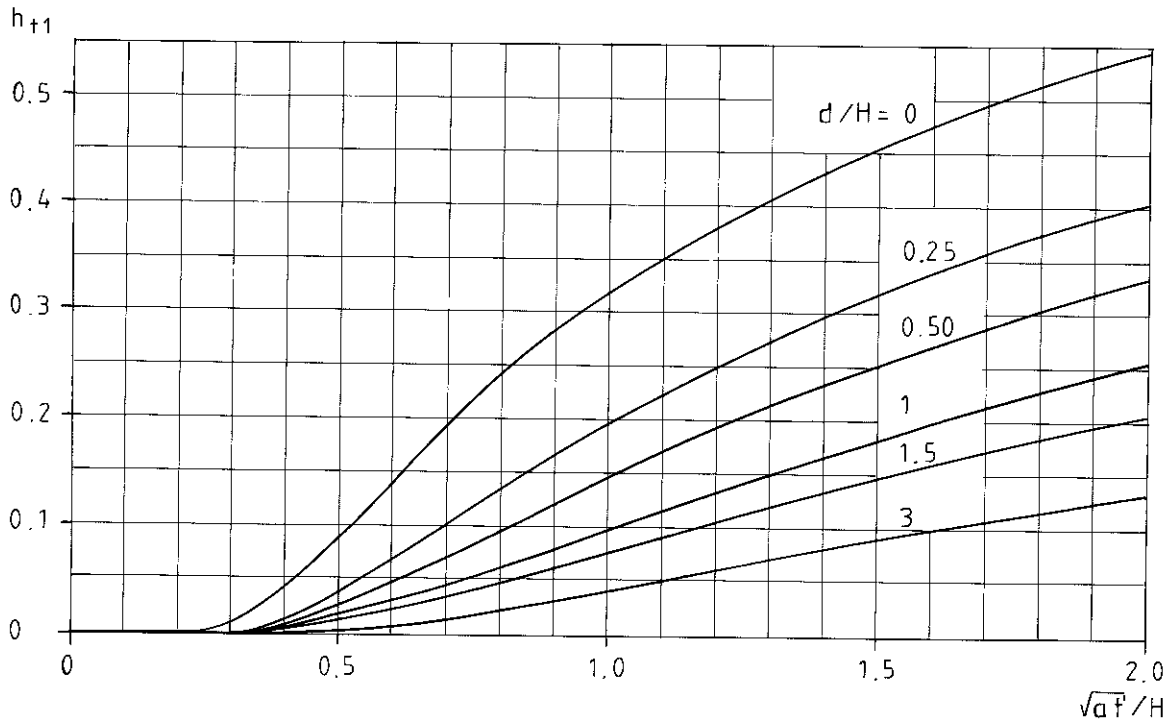

Figure 18.6: Heat loss factor h_{t1} for a cellar with a totally insulated wall.

It is interesting to note that it takes some time before the heating from the ground surface is felt at the floor. The parameter $\sqrt{at}/H$ is approximately 0.3 before there is any heat loss through the floor. For our reference cases with $H = 2.0$ m and $a = 0.75 \cdot 10^{-6}$ m^2/s this corresponds to 22 days.

For a case $d_w \neq \infty$ the heat loss through the floor is less than q_{t1} due to the cooling of the ground by the wall.

18.3.1 APPROXIMATE FORMULA

An estimation of the maximum heat loss through the floor for a cellar with totally insulated walls is given in this section. Consider the temperature field far away from the cellar in undisturbed ground. The temperature at the depth H is from (6.12) in Section 6.1:

$$T(x, H, t) = T_2 \cdot \mathrm{erfc}(H/\sqrt{4at}) \tag{18.10}$$

The temperature at this depth closer to the building is less than (18.10), due to the ground under the cellar. It is cooled by the region around the corner where the wall meets the floor. An upper limit of the temperature at $z = H, x > 0$ is given by (18.10).

We now have a problem similar to the slab on the ground for the region $z > H, -\infty < x < \infty$. The outdoor temperature is $T_2 \cdot \mathrm{erfc}(H/\sqrt{at})$ instead of T_2, which was treated in Chapter 10. The heat flow q_{t1} is given by Duhamel's theorem, [13], formulæ (18.10) and (10.2). We get the following inequality:

$$h_{t1} \leq \int_0^t \mathrm{erfc}(H/\sqrt{4a\tau}) \cdot \frac{\partial}{\partial t} h_t^0 \left(\sqrt{a(t-\tau)}/d\right) d\tau \tag{18.11}$$

This expression becomes:

$$h_{t1} \leq \int_0^{\sqrt{at}/d} \mathrm{erfc}\left(H/(2d\sqrt{at/d^2 - s^2})\right) \cdot e^{s^2} \mathrm{erfc}(s)\, ds \tag{18.12}$$

This approximation is shown in Figure 18.7 by the dashed curve for the case $H/d = 1$. The continuous curve gives the numerically calculated heat loss factor. The relative error in the approximation is less than 42 % for $\sqrt{at}/H < 1$.

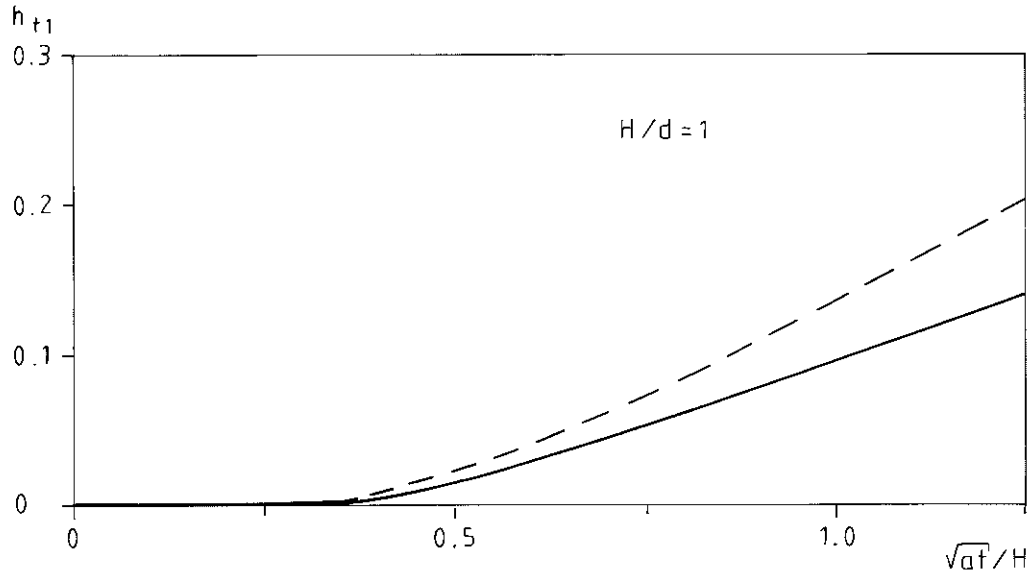

Figure 18.7: The numerically calculated heat loss factor h_{t1} for $H/d = 1$, and the approximation (18.12) (dashed curve).

18.4 APPROXIMATION FOR DEEP CELLARS

It is shown in Section 6.4.2 that the undisturbed ground temperature at the depth $2\sqrt{at}$ is reduced to 16 % of the ground surface temperature. For deep cellars (and not too long times), $\sqrt{at}/H \ll 1$, the main part of the temperature influence from the ground surface is located at a depth less than H. The temperature at the cellar wall is approximately the same as for the infinitely deep cellar. A good approximation of the heat loss through the wall is therefore given by the heat loss formula for a wall segment, (18.8). In order to account for the heat loss through the floor, which is small for deep cellars, we add the heat loss derived in Section 18.3, (18.9). We get the following approximate heat loss formula for *deep cellars*:

$$h_t(\sqrt{at}/H, d/H, d_w/H) \approx h_{t1}(\sqrt{at}/H, d/H) + h_t^w(\sqrt{at}/d_w, H/d_w) \tag{18.13}$$

The approximation is tested in Figure 18.9 for reference case D1. The dotted curve shows the approximation (18.13), where h_{t1} is obtained from the numerically calculated values in Figure 18.6. For the dashed-dotted curve the approximation (18.12) is used for h_{t1}.

18.5 APPROXIMATION FOR SHALLOW CELLARS

Let us now consider the heat loss for a shallow cellar. A superposition of the same type as in Section 17.5 is used in this section. The temperature in the ground is denoted by $T(x, z, t)$. It is equal to T_2 at the ground surface. The boundary temperature at the cellar is zero. The temperature can be obtained from a superposition of the two temperature fields $T_1(x, z, t)$ and $T_2(x, z, t)$. Figure 18.8 shows the superposition.

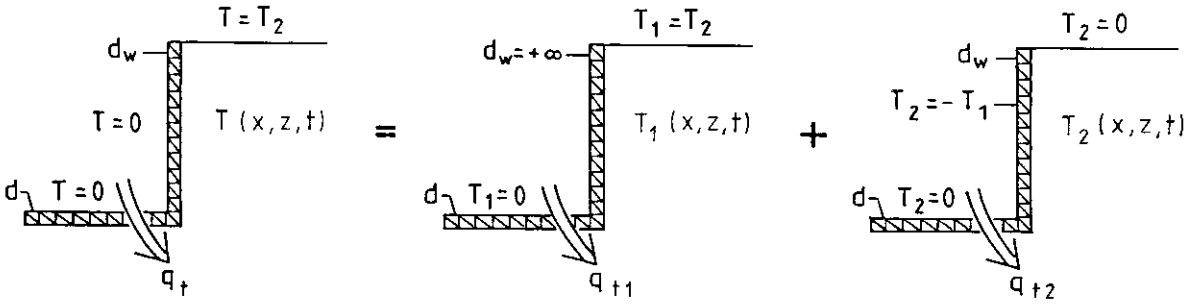

Figure 18.8: Superposition of the temperature field $T_1(x, z, t)$ for a cellar edge with a totally insulated wall and the residual temperature $T_2(x, z, t)$ in order to get the temperature for the original problem shown in the left figure.

There is no heat flow through the wall ($d_w = \infty$) for the first component $T_1(x, z, t)$, which takes care of the main part of the heat loss through the floor. The second, residual temperature field $T_2(x, z, t)$ takes care of the heat flow through the wall. The edge heat loss becomes:

$$q_t(t) = q_{t1}(t) + q_{t2}(t)$$

$$q_{t1}(t) = -\lambda T_2 \cdot h_{t1} \qquad q_{t2}(t) = -\lambda T_2 \cdot h_{t2} \tag{18.14}$$

The heat loss factor h_{t1} has already been treated in Section 18.3.

For shallow cellars $\sqrt{at}/H \gg 1$ the local temperature process in the cellar wall region is approximately the same as the steady-state one. This was shown in a similar problem studied in Section 18.2.2. A formula for the heat flow over a wall segment $x = 0, 0 < z < H$ for a cellar of infinite depth is given. For large values of $\sqrt{at}/H$ the heat loss is approximately equal to the steady-state heat loss.

The whole temperature field $T_2(x, z)$ is located in the cellar edge region. It has virtually vanished at a distance of $\sqrt{at}$ from the cellar wall. The local thermal process around the wall is approximately given by the steady-state conduction equation with the actual outdoor temperature. Thus it coincides with the steady-state temperature field $T_2(x, z)$ (where T_i=0 and $T_0 = T_2$) studied in Section 16.4.1. We get the same heat loss factor for h_{t2} as h_{s2}:

$$h_{t2} \approx h_{s2} \tag{18.15}$$

This steady-state heat loss factor is given by Figure 16.7.

The heat loss h_{t2} does not only give a heat loss through the wall. It also gives a counter-flow through the floor. The floor heat loss contributions from q_{t1} and q_{t2} have opposite signs. Thus an approximation of the heat loss through the floor that is given by q_{t1} becomes an overestimation.

We get the following approximation of the heat loss for *shallow cellars*:

$$h_t(\sqrt{at}/H, d/H, d_w/H) \approx h_{t1}(\sqrt{at}/H, d/H) + h_{s2}(d/H, d_w/H) \tag{18.16}$$

The heat loss factor h_{t1} is given by Figure 18.6. (An approximate formula for the heat loss factor is given by (18.12).) The heat loss factor h_{s2} is given by Figure 16.7. The approximation is shown in Figure 18.9 by the dashed curve for reference case D1. The approximation does not estimate the heat loss factor satisfactory for small times as expected.

18.6 APPROXIMATE EDGE HEAT LOSS FORMULA

In this section we will summarize the outdoor step-change heat loss formulæ for the cellar. A general approximate formula for the edge heat loss of the cellar will be obtained. We have:

$$Q_t(t) \approx L_e \cdot q_t(t) \qquad \sqrt{at} < L_{min}/2 \tag{18.17}$$

Here L_e is the perimeter length of the building. For a rectangular house it is $2L + 2B$. The length L_{min} is the minimum dimension of the foundation in the horizontal plane. For a rectangular slab it is equal to B.

We have one approximation for deep cellars in Section 18.4 and one for shallow cellars in Section 18.5. From Figure 18.9 below we find that $\sqrt{at}/H$=1 should be a suitable limit of validity between the two approximations.

$$h_t \approx h_{t1}(\sqrt{at}/H, d/H) + h_t^w(\sqrt{at}/d_w, H/d_w) \quad \sqrt{at}/H < 1 \tag{18.18}$$

$$h_t \approx h_{t1}(\sqrt{at}/H, d/H) + h_{s2}(d_w/H, d/H) \qquad \sqrt{at}/H > 1 \tag{18.19}$$

The heat loss factor h_t^w is given by (18.8) and Figure 18.4, and h_{t1} is given by Figure 18.6. The steady-state heat loss factor h_{s2} is obtained from Figure 16.7. The approximations (18.18-19) for the heat loss factor h_t are shown in Figure 18.9 for reference case D1.

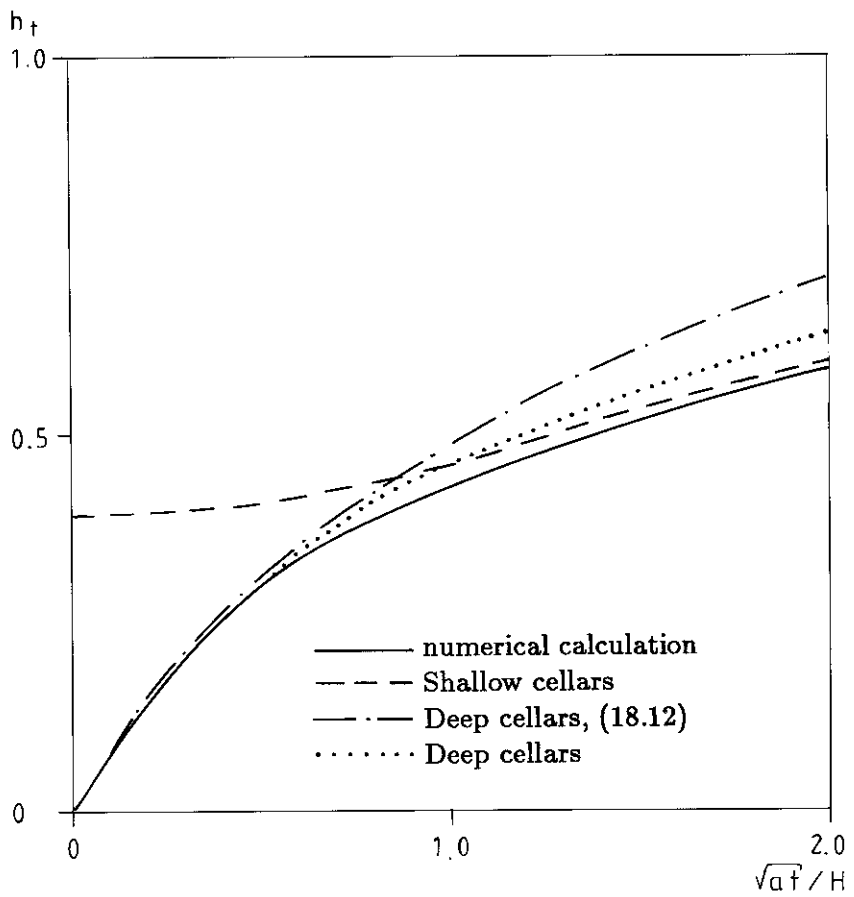

Figure 18.9: Comparison between the numerically calculated heat loss factor and the approximation (18.13) for deep cellars and (18.16) for shallow cellars for a cellar edge for reference case D1. The dashed-dotted curve shows the approximation for deep cellars where the upper limit approximation (18.12) is used for the heat loss factor h_{t1}.

Chapter 19

DESIGN RULES

The accumulated heat loss during the heating season and the peak effect are of interest in energy balance calculations for a building. Simple design rules based on the presented results are given for a cellar. The basic case with a rectangular building and constant equivalent insulation thickness at the floor and at the wall is treated in detail. The design rules are available as a PC-program. See Section 19.4. In the last section the design rules are applied on the reference cases.

19.1 OUTDOOR TEMPERATURE

The outdoor temperature determines the heat loss from the building. It may vary strongly during the day, and from day to day. However it has been shown that variations with a short time period or duration can be neglected. The outdoor temperature can be approximated by a simplified expression.

It should normally be sufficient to use the following approximation of the outdoor temperature for the calculation of the heat loss during the heating season:

$$T_{out}(t) = T_0 + T_1 \cdot \sin(2\pi t/t_0) \tag{19.1}$$

Here T_0 is the annual mean temperature, and T_1 is the amplitude of the sinusoidal temperature variation with the time period t_0=1 year. The function (19.1) may be determined by fitting to mean values over, for instance, every week of the year for the actual place. The temperature (19.1) is shown by the continuous curve in Figure 19.1.

The sinusoidal temperature represents a mean temperature during the winter months. In order to calculate the peak effect we need to represent the outdoor temperature in greater detail, in particular during the coldest period. It should normally be sufficient to use a single suitably chosen pulse, which starts at $t = t_1$ and ends at $t = t_1 + t_2$. The magnitude of the pulse is T_2. The value of T_2 is negative for a cold spell. The maximum heat loss is obtained at the end of the pulse. The chosen representation of the outdoor temperature is shown in Figure 19.1.

19.2 HEAT LOSS DURING HEATING SEASON

The heat loss to the ground is denoted by $Q(t)$ (W). For the outdoor temperature (19.1) we get a steady-state (time-independent) component Q_s and a periodic component $Q_p(t)$:

$$Q(t) = Q_s + Q_p(t) \tag{19.2}$$

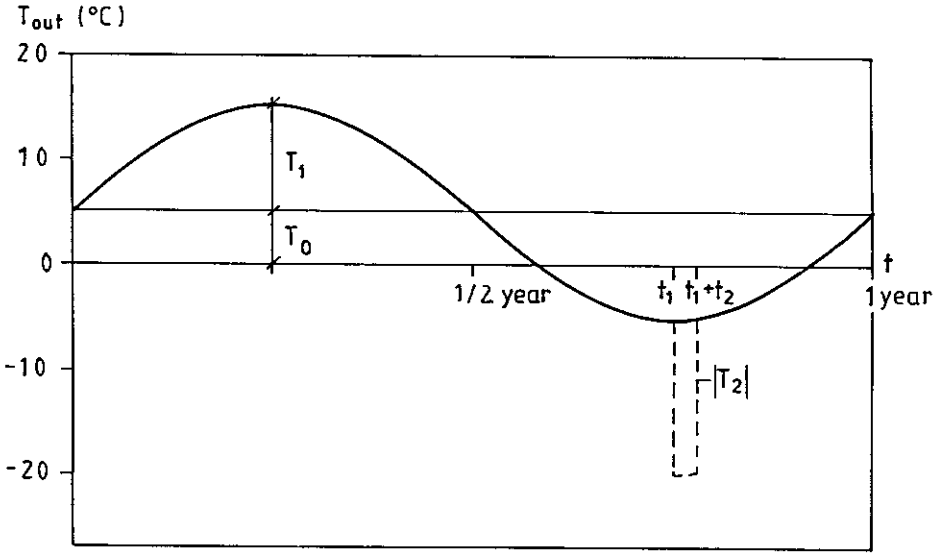

Figure 19.1: Representation of the outdoor temperature for the calculation of the energy demand (continuous curve) and the peak effect (continuous + dashed curve).

The steady-state component is treated in Chapter 16, and the periodic one in Chapter 17. For a rectangular cellar with constant insulation thickness at floor and cellar wall, we have according to formula (16.1-2) for the steady-state heat loss:

$$Q_s = \lambda(T_i - T_0)L \cdot h_s(L/B, H/B, d/B, d_w/B) \tag{19.3}$$

Here L is the length of the cellar, B the width, and H is the depth to the cellar floor. The insulation thickness of the floor is given by the equivalent length $d = \lambda d_i/\lambda_i$, and for the wall it is $d_w = \lambda d_{iw}/\lambda_{iw}$. The non-dimensional heat loss factor h_s is calculated according to (16.20-21). The periodic component is obtained from the imaginary part of (17.22):

$$Q_p(t) = -\lambda T_1 \cdot (2L + 2B) \cdot |h_p| \cdot \sin(2\pi(t/t_0 - \phi_p)) \tag{19.4}$$

The functions $|h_p|$ and ϕ_p depend on $d/d_0, d_w/d_0$, and H/d_0. They are calculated according to (17.23-27). The periodic penetration depth $d_0 = \sqrt{at_0/\pi}$ is discussed in Sections 4.5.2 and 6.1.1. In the formula above the thermal resistance at the ground surface is neglected ($d_1 = 0$).

Consider a heating season between the time t_a and t_b. The total heat loss E_y (year) during the heating season is given by the integral of (19.2) over the time $t_a < t < t_b$. This gives the following formula for the *accumulated heat loss during the heating season*:

$$E_y = \lambda(T_i - T_0)L \cdot h_s(L/B, H/B, d/B, d_w/B) \cdot (t_b - t_a) + \tag{19.5}$$

$$+ \lambda T_1(2L + 2B) \cdot |h_p| \cdot \frac{t_0}{2\pi} \cdot \{\cos(2\pi(t_b/t_0 - \phi_p)) - \cos(2\pi(t_a/t_0 - \phi_p))\}$$

19.3 PEAK EFFECT DURING THE WINTER

Let $Q_t(t)$ denote the heat loss due to the cold spell. The total heat loss for a temperature according to (19.1) with a superimposed cold spell as shown in Figure 19.1 becomes:

$$Q(t) = Q_s + Q_p(t) + Q_t(t) \tag{19.6}$$

The formula for $Q_t(t)$ is obtained from Chapter 18. For a rectangular building we get from (18.1-2):

$$Q_t(t) = -\lambda T_2(2L + 2B) \cdot h_t\left(\sqrt{a(t - t_1)}/H, d/H, d_w/H\right) \quad t_1 \leq t \leq t_1 + t_2 \tag{19.7}$$

The negative sign is due to the fact that T_2 is negative for a cold spell: The function h_t is calculated according to (18.18-19). The formula neglects the thermal resistance at the ground surface. The largest value for $Q_t(t)$ is obtained at the end of the cold spell: $t = t_1 + t_2$.

We choose the time $t_1 + t_2$ so that the maximum heat loss due to the cold spell coincides with the maximum of the periodic heat loss. With (19.6), (19.3-4) and (19.7) we get the following formula for the *peak effect* during the year:

$$Q(t)|_{max} = \lambda(T_i - T_0)L \cdot h_s(L/B, H/B, d/B, d_w/B) + \lambda T_1(2L + 2B) \cdot |h_p|$$
$$-\lambda T_2(2L + 2B) \cdot h_t\left(\sqrt{at_2}/H, d/H, d_w/H\right) \tag{19.8}$$

The three heat loss factors are given by (16.20-21), (17.23-27), and (18.18-19).

Figure 1.7 and Example 18.2 show that the contribution from the temperature pulse is normally quite small. A thermal resistance at ground surface strongly reduces the heat loss $Q_t(t)$. This makes it possible to neglect the heat loss due to the pulse, if there is snow at the ground surface. The maximum heat loss is then obtained from the first two parts of formula (19.8).

$$Q(t)|_{max} = \lambda(T_i - T_0)L \cdot h_s(L/B, H/B, d/B, d_w/B) + \lambda T_1(2L + 2B) \cdot |h_p| \quad \text{(snow)} \tag{19.9}$$

19.4 PC-PROGRAM FOR THE DESIGN RULES

The formulæ of the above design rules for a rectangular building with a cellar foundation with constant insulation thickness at the floor and at the wall are available as a small PC-program described below. The program runs under MS-DOS on IBM-PC and compatible computers. The input is given interactively. The manual is given in the supplementary report [8].

The design rules assume an outdoor temperature of the type (19.1). With an arbitrary phase ϕ we get:

$$T_{out}(t) = T_0 + T_1 \cdot \sin(2\pi(t_{days}/365 - \phi)) \tag{19.10}$$

Here t_{days} is the time in days. A temperature pulse is superimposed on the outdoor temperature (19.10) during the coldest period of the winter. The magnitude of the pulse is T_2 and it has the duration t_2.

Input data

L	Length of building(m)
B	Width of building (m)
H	Depth to the floor of the cellar (m)
d_i	Insulation thickness of the floor (m)
d_{iw}	Insulation thickness of the wall (m)
λ_i	Thermal conductivity of the floor insulation (W/mK)
λ_{iw}	Thermal conductivity of the wall insulation (W/mK)
T_i	Indoor temperature (°C)

T_0	Annual mean outdoor temperature (°C)
T_1	Amplitude of the periodic outdoor temperature (°C)
λ	Thermal conductivity of the ground (W/mK)
C	Volumetric heat capacity of the ground (J/m^{3}K)
t_a	Start time for the heating season (days)
t_b	End time for the heating season (days)
T_2	Increase of outdoor temperature due to temperature pulse (°C)
t_2	Duration time for the pulse (days)

Restrictions on input data

There are the following restrictions on the input variables:

$$L, B, d_i, d_{iw}, \lambda_i, \lambda_{iw}, \lambda, C, t_2 > 0 \tag{19.11}$$

$$B \leq L \tag{19.12}$$

$$0 \leq H/B \leq 0.25 \tag{19.13}$$

$$\frac{d_i \lambda/\lambda_i}{B} \geq 0.05 \tag{19.14}$$

$$\frac{d_{iw} \lambda/\lambda_{iw}}{H} \geq 0.10 \tag{19.15}$$

$$t_a < t_b \tag{19.16}$$

Output data

Q_s	Annual mean heat loss (W). It is given by (16.1-2) and (16.20-21).
$Q_p\|_{max}$	Amplitude of the periodic heat loss (W). It is given by the absolute value of (17.22), where h_p is given by (17.23-27).
ϕ_p	The phase delay, (-), for the periodic heat loss is given by (17.23-27).
E_y	Accumulated heat loss over the heating season (J,kWh). It is given by (19.5).
$Q(t)\|_{max}$	Peak effect during the winter (W). It is given by (18.1-2) and (18.18-19).

With these output data the heat loss (except for the pulse) becomes:

$$Q(t) = Q_s + Q_p|_{max} \cdot \sin(2\pi(t_{days}/365 - \phi - \phi_p)) \tag{19.17}$$

An example

Reference case D1 is used as a test example. Time zero corresponds to the time 00.00 on 1 of January.
Input data:

$$\begin{aligned}
&L = 12 \text{ m} \\
&B = 8 \text{ m} \\
&H = 2 \text{ m} \\
&d_i = 0.08 \text{ m} \\
&d_{iw} = 0.08 \text{ m} \\
&\lambda_i = 0.04 \text{ W/mK} \\
&\lambda_{iw} = 0.04 \text{ W/mK} \\
&T_i = 20\,^\circ\text{C} \\
&T_0 = 5\,^\circ\text{C} \\
&T_1 = 10\,^\circ\text{C} \\
&\lambda = 1.5 \text{ W/mK} \\
&C = 2.0 \cdot 10^6 \text{ J/m}^3\text{K} \\
&t_a = 8.5/12 \cdot 365 = 258.5 \text{ days} \\
&t_b = (12 + 4.5)/12 \cdot 365 = 502 \text{ days} \\
&T_2 = -15^\circ\text{C} \\
&t_2 = 7 \text{ days}
\end{aligned} \tag{19.18}$$

Output data:

$$Q_s = 734 \text{ W} \tag{19.19}$$

$$Q_p|_{max} = 246 \text{ W} \tag{19.20}$$

$$\phi_p = 0.067 \tag{19.21}$$

$$E_y = 1.74 \cdot 10^{10} \text{ J} = 4840 \text{ kWh} \tag{19.22}$$

$$Q(t)|_{max} = 198 \text{ W} \tag{19.23}$$

19.5 TOTAL HEAT LOSS FOR THE REFERENCE CASES

The various heat loss components for the reference cases have been treated separately in the previous chapters. The results are summarized in this chapter in order to get a complete picture of the heat loss for the cellars. The reference cases are defined in Section 1.7.

We have a constant indoor temperature:

$$T_i = 20^\circ\text{C} \tag{19.24}$$

The outdoor temperature is:

$$T_{out}(t) = 5 + 10 \cdot \sin(2\pi t/t_0) \ (^\circ\text{C}) \qquad t_0 = 1 \text{ year} \tag{19.25}$$

In order to estimate the peak heat loss, a cold spell is superimposed on this temperature. See Figure 1.5. The pulse starts in the middle of the winter ($t_1 = 3t_0/4$) and stops a week later ($t_2 = 1$ week). The heating season starts in the middle of September ($t_a = 4.5/12 \cdot t_0$) and stops in the middle of May ($t_b = 12.5/12 \cdot t_0$).

The lengths, widths, and depths of the cellars are:

$$L = 12 \text{ m} \qquad B = 8 \text{ m} \qquad H = 2 \text{ m} \qquad \text{reference case D} \tag{19.26}$$

$$L = 30 \text{ m} \qquad B = 15 \text{ m} \qquad H = 2 \text{ m} \qquad \text{reference case E} \tag{19.27}$$

The equivalent insulation thicknesses for the reference cases are given in Example 16.1:

$$\begin{array}{lll} \text{D1:} & d = 3 \text{ m} & d_w = 3 \text{ m} \\ \text{D2:} & d = 0 \text{ m} & d_w = 6 \text{ m} \\ \text{D3:} & d = 1 \text{ m} & d_w = 1 \text{ m} \\ \text{E1:} & d = 3 \text{ m} & d_w = 3 \text{ m} \\ \text{E2:} & d = 0 \text{ m} & d_w = 3 \text{ m} \end{array} \tag{19.28}$$

The periodic penetration depth is:

$$d_0 = 2.74 \text{ m} \tag{19.29}$$

Example 19.1. Reference cases D.

The heat loss for reference cases D is given below. The result for reference case D1 has been already shown in Figure 1.7. For the periodic component we need the following data:

$$-\lambda T_1(2L + 2B) = 600 \text{ W}$$

Reference case D1:

The steady-state heat loss is obtained from Example 16.5:

$$Q_s = 734 \text{ W}$$

The periodic heat loss factor is given in Example 17.3. With (17.2-3) we get:

$$Q_p = -246 \cdot \sin(2\pi(t/t_0 - 0.067)) \text{ W}$$

The total heat loss becomes:

$$Q(t) = 734 - 246 \cdot \sin(2\pi(t/t_0 - 0.067)) \text{ W}$$

The maximum heat loss for the cold spell is calculated in Example 18.2:

$$Q_t|_{max} = 198 \text{ W}$$

The maximum of the total heat loss becomes, according to (19.8):

$$Q|_{max} = 734 + 246 + 198 = 1178 \text{ W}$$

The accumulated heat loss during the heating season is, from (19.5):

$E_y = 4840$ kWh

Reference case D2:

The steady-state heat loss is obtained from Example 16.5:

$Q_s = 1076$ W

The periodic heat loss factor is given in Example 17.3. With (17.2-3) we get:

$Q_p = -300 \cdot \sin(2\pi(t/t_0 - 0.095))$ W

The total heat loss becomes:

$Q(t) = 1076 - 300 \cdot \sin(2\pi(t/t_0 - 0.095))$ W

The maximum heat loss for the cold spell is calculated in Example 18.2:

$Q_t|_{max} = 167$ W

The maximum of the total heat loss becomes, according to (19.8):

$Q|_{max} = 1076 + 300 + 167 = 1543$ W

The accumulated heat loss during the heating season is, from (19.5):

$E_y = 6995$ kWh

Reference case D3:

The steady-state heat loss is obtained from Example 16.5:

$Q_s = 1275$ W

The periodic heat loss factor is given in Example 17.3. With (17.2-3) we get:

$Q_p = -540 \cdot \sin(2\pi(t/t_0 - 0.052))$ W

The total heat loss becomes:

$Q(t) = 1275 - 540 \cdot \sin(2\pi(t/t_0 - 0.052))$ W

The maximum heat loss for the cold spell is calculated in Example 18.2:

$Q_t|_{max} = 477$ W

The maximum of the total heat loss becomes, according to (19.8):

$Q|_{max} = 1275 + 540 + 477$ W

The accumulated heat loss during the heating season is, from (19.5):

$E_y = 8615$ kWh

Example 19.1. Reference cases E.

The heat loss for reference cases E is given below. For the periodic component we need the following data:

$-\lambda T_1(2L + 2B) = 1350$ W

Reference case E1:

The steady-state heat loss is obtained from Example 16.5:

$Q_s = 2072$ W

The periodic heat loss factor is given in Example 17.3. With (17.2-3) we get:

$Q_p = -554 \cdot \sin(2\pi(t/t_0 - 0.067))$ W

The total heat loss becomes:

$Q(t) = 2072 - 554 \cdot \sin(2\pi(t/t_0 - 0.067))$ W

The maximum heat loss for the cold spell is calculated in Example 18.2:

$Q_t|_{max} = 446$ W

The maximum of the total heat loss becomes, according to (19.8):

$Q|_{max} = 2072 + 554 + 446 = 3072$ W

The accumulated heat loss during the heating season is, from (19.5):

$E_y = 13350$ kWh

Reference case E2:

The steady-state heat loss is obtained from Example 16.5:

$Q_s = 2969$ W

The periodic heat loss factor is given in Example 17.3. With (17.2-3) we get:

$Q_p = -878 \cdot \sin(2\pi(t/t_0 - 0.080))$ W

The total heat loss becomes:

$Q(t) = 2969 - 878 \cdot \sin(2\pi(t/t_0 - 0.080))$ W

The maximum heat loss for the cold spell is calculated in Example 18.2:

$Q_t|_{max} = 486$ W

The maximum of the total heat loss becomes, according to (19.8):

$Q|_{max} = 2969 + 878 + 486 = 4333$ W

The accumulated heat loss during the heating season is, from (19.5):

$E_y = 19375$ kWh

REFERENCES

SUPPLEMENTARY REPORTS [1]

[1] Hagentoft, C-E, Claesson, J, Wallin, N-O. Heat loss at the edge of a thermally insulated slab on the ground. Wiener-Hopf solution for periodic and step-change air temperature. Notes on heat transfer 1-1985. Dept. of Building Technology, University of Lund, Box 118, S-221 00 Lund, Sweden. CODEN LUTDVG(TVBH-7098).

[2] Hagentoft, C-E. Temperature under a totally insulated slab on the ground due to variable ground surface temperature. Notes on heat transfer 3-1985. Dept. of Building Technology, University of Lund, Box 118, S-221 00 Lund, Sweden. CODEN LUTDVG(TVBH-7081).

[3] Hagentoft, C-E. Heat loss and temperature for a cellar of infinite depth. Periodic and step change air temperature. Notes on heat transfer 10-1987. Dept. of Building Technology, University of Lund, Box 118, S-221 00 Lund, Sweden. CODEN LUTDVG(TVBH-7102).

[4] Hagentoft, C-E. Steady-state ground temperature and heat loss for a thermally insulated slab on the ground. Equal insulation thickness outside and inside the house. Notes on heat transfer 4-1987. Dept. of Building Technology, University of Lund, Box 118, S-221 00 Lund, Sweden. CODEN LUTDVG(TVBH-7092).

[5] Hagentoft, C-E. Semi-analytical method for the temperature in the ground under a house with variable insulation thickness. Notes on heat transfer 7-1987. Dept. of Building Technology, University of Lund, Box 118, S-221 00 Lund, Sweden. CODEN LUTDVG(TVBH-7098). (Accepted for publication in International Journal of Building Science and its Applications.)

[6] Hagentoft, C-E. Analytical solution for the steady-state temperature in the ground at the edge of an insulated cellar. Notes on heat transfer 6-1987. Dept. of Building Technology, University of Lund, Box 118, S-221 00 Lund, Sweden. CODEN LUTDVG(TVBH-7097).

[7] Hagentoft, C-E. An analytical model for crawl-space temperatures and heat flows. Steady-state, periodic and step-response components. Dept. of Building Technology, University of Lund, Box 118, S-221 00 Lund, Sweden. TVBH-3012, 1986.

[8] Hagentoft, C-E. PC-program: Design rules for the slab on the ground and the cellar. Notes on heat transfer 1-1988. Dept. of Building Technology, University of Lund, Box 118, S-221 00 Lund, Sweden. CODEN LUTDVG (TVBH-7107).

[1] The supplementary reports [1-6,8] are collected in a supplementary publication.

OTHER REFERENCES

[9] Hagentoft, C-E. Simulation of heat losses and ground temperatures for district-heating culverts. Comparisons with field experiments for well insulated, damaged and extra insulated culverts. Swedish Council for Building Research. D16:1986.

[10] Eftring, B. Thesis: Numerical solution of heat conduction equation for solids. A physical approach. (preliminary title). Dept. of Building Science, Lund Institute of Technology, Lund, Sweden. (To be published.)

[11] Claesson, J. Thermal resistance distribution over the boundary according to a heat loss theorem. Notes on heat transfer 4-1985. Dept. of Building Technology, University of Lund, Box 118, S-221 00 Lund, Sweden (To be published).

[12] Kay, J.M., Nedderman, R.M. An introduction to fluid mechanics and heat transfer. Cambridge University Press, 1979.

[13] Carslaw, H.S., Jaeger, J.C. Conduction of heat in solids. Oxford University Press, 1980.

[14] Claesson, J, Eftring, B. Optimal distribution of thermal insulation and ground heat loss. Swedish Council for Building Research. D33:1980.

[15] Claesson, J. Optimal distribution of thermal insulation and ground heat loss. Part II. Dept. of Building Technology, University of Lund, Box 118, S-221 00 Sweden (To be published).

[16] Claesson, J, Nevander, L E, Sandin, K. Värme, 1984. Dept. of Building Technology, University of Lund, Box 118, S-221 00 Lund, Sweden.

[17] Anderlind, G. Approximation of monthly mean temperatures by using Fourier Series. Report BKL 1984:1 (E). Byggnadskonstruktionslära, University of Lund, Box 118, S-221 00 Lund, Sweden.

[18] Bear, J. Dynamics of fluids in porous media. American Elsevier publishing company, Inc. New York, 1975.

[19] Dill R.S., Robinson, W.C. and Robinson, H.E. Measurements of heat losses from slab floors. U. S. Dept. of Commerce, Nat. Bur. Stds., Building Materials and Structures Report BMS 103, 1945.

[20] Bareither, H.D., Fleming, A.N. and Alberty, B.E. Temperature and heat loss characteristics of concrete floors laid on the ground. Small Homes Council. University of Illinois. Technical Report PB 93920, 1948.

[21] Macey, H.H. Heat loss through a solid floor. J. Inst. Fuel 22, 369-371, 1949.

[22] Billington, N.S. Heat loss through solid ground floors. Journal, Institution Heating and Ventilating Engineers, Vol. 19, No. 195, p. 351-372, 1951.

[23] Lachenbruch, A.H. Three dimensional heat conduction in permafrost beneath heating buildings. Geological Survey Bulletin 1052-B, U.S. Government Printing Office, Washington D.C., 1957.

[24] Vuorelainen, O. The temperature field produced in the ground by a heated slab laid direct on ground, and the heat flow from slab to ground. The State Inst. for Tech. Res., Finland, Publ. No. 52, 1960.

[25] Vuorelainen, O. The temperatures under houses erected immediately on the ground and heat losses from their foundation slab, The State Inst. for Tech. Res., Finland, Publ. No. 55, 1960.

[26] Vuorelainen, O. A practical method for calculation of the heat losses into the ground from buildings erected immediately on the ground, The State Inst. for Tech. Res., Finland, Publ. No. 76, 1963.

[27] Adamson, B., Domne'r, G., Rönning, M. Soil temperature under houses without basements. Swedish Council for Building Research. Transactions no. 46, 1964.

[28] Adamson, B., Claesson, J. and Eftring, B. Floor slabs on ground - thermal insulation and floor temperatures. Swedish Council for Building Research. Report R40:1973.

[29] Adamson, B. Floor slabs on ground - foundation depth. Swedish Council for Building Research. Report R41:1973.

[30] Muncey, R.W. and Spencer, J.W. Heat flow into the ground under a house. Proc. I.C.H.M.T. Inst. Sem. on Heat and Mass Transfer in Buildings. Dubrovnik, 1977.

[31] Muncey, R.W. and Spencer, J.W. Heat flow into the ground under a house. Energy Conservation in Heating, Cooling and Ventilating Buildings. Vol. 2, pp. 639-660. Washington, DC: Hemisphere Publishing Corp, 1978.

[32] Delsante, A.F., Stokes, A.N. and Walsh, P.J. Application of Fourier transform to periodic heat flow into the ground under a building. International Journal of Heat and Mass Transfer, 1983.

[33] Kusuda, T., Piet, O. and Bean, J.W. Annual variation of temperature field and heat transfer under heated ground surfaces: Slab-on-grade floor heat loss calculations. Nat. Bur. Stds. Building Sience Series 156, 1983.

[34] Kusuda, T. and Bean, J.W. Simplified methods for determining seasonal heat loss from uninsulated slab-on-grade floors. Ashrae Transactions, No. 4, 1984.

[35] Bäckström, H., Sjölund, J. and Wågberg, C. Isolering av grund- och källarkonstruktioner. En praktisk handledning för beräkning och konstruktiv utformning. (Insulation of slab and cellar constructions. A practical guide for calculation and design.) Swedish Council for Building Research. Report R10:1985.

[36] Landman, K.A. and Delsante, A.E. Steady-state heat losses from a building floor slab with horizontal edge insulation. Building and Environment, Vol. 22, No. 1, pp. 57-60, 1987.

[37] Landman, K.A. and Delsante, A.E. Steady-State heat losses from a building floor slab with vertical edge insulation - II. Building and Environment, Vol. 22, No. 1, pp. 49-55, 1987.

[38] Delsante, A.E. Theoretical calculations of the steady-state heat losses through a slab-on-ground floor. Building and Environment, Vol. 23, No. 1, pp. 11-17, 1988.

[39] Swedish Building Code, SBN 1980. ISBN-91-38-05209-1.

[40] CIBS Guide A3, Thermal properties of building structures. The Chartered Institution of Building Services, 1980.

[41] Houghten, F.C., Taimuty, S.K., Gutberlet, C and Brown, C.J. Heat loss through basement walls and floors. Heating, Piping and Air-Conditioning. Vol 14, p. 69-74, 1942.

[42] Boileau, G.G. and Latta, J.K. Calculation of basement heat loss. Technical paper No. 292 of the Div. of Building Research, NRCC 10477, National Research Council Canada, Ottawa K1A OR6, 19 pp, 1968.

[43] Bäckström, H. Energiförluster för grundkonstruktioner i småhus. (Heat loss through foundations of residential buildings.) Swedish Council for Building Research. Report R32:1980.

[44] Shipp, H.P. and Broderick, T.B. Comparison of annual heating loads for various basement wall insulation strategies using transient and steady-state models. ASTM Conference. Owens-Corning Fiberglas Corporation, Technical Center, Granville, Ohio, 1980.

[45] Mitalas, G.P. Basement heat loss studies at DBR/NRC. DBR Paper No. 1045. Division of Building Research. National Research Council Canada, 1982.

[46] Kusuda, T. and Bean, J.W. Design heat loss factors for basement and slab floors. Building Physics Division. National Bureau of Standards, Gaithersburg, MD 20899, 1984.