LUND UNIVERSITY

Reducing revenue loss due to disturbances in utilities using buffer tanks - A case study at Perstorp

Lindholm, Anna; Johnsson, Charlotta; Hägglund, Tore; Carlsson, Hampus

Published in:
Proceedings of the 17th Nordic Process Control Workshop

2012

Link to publication

Citation for published version (APA):
Lindholm, A., Johnsson, C., Hägglund, T., & Carlsson, H. (2012). Reducing revenue loss due to disturbances in utilities using buffer tanks - A case study at Perstorp. In *Proceedings of the 17th Nordic Process Control Workshop* (pp. 199-200). Technical University of Denmark DTU Informatics.

Total number of authors:
4

General rights
Unless other specific re-use rights are stated the following general rights apply:
Copyright and moral rights for the publications made accessible in the public portal are retained by the authors and/or other copyright owners and it is a condition of accessing publications that users recognise and abide by the legal requirements associated with these rights.
• Users may download and print one copy of any publication from the public portal for the purpose of private study or research.
• You may not further distribute the material or use it for any profit-making activity or commercial gain
• You may freely distribute the URL identifying the publication in the public portal

Read more about Creative commons licenses: https://creativecommons.org/licenses/

Take down policy
If you believe that this document breaches copyright please contact us providing details, and we will remove access to the work immediately and investigate your claim.

LUND UNIVERSITY

PO Box 117
221 00 Lund
+46 46-222 00 00

Reducing Revenue Loss due to Utility Disturbances using Buffer Tanks – A Case Study at Perstorp

Anna Lindholm
Automatic Control, Lund

Charlotta Johnsson
Automatic Control, Lund

Tore Hägglund
Automatic Control, Lund

Hampus Carlsson
Perstorp AB

I. Introduction

In the chemical process industry, disturbances in utilities such as steam and cooling water often cause large losses. Earlier studies have been performed on the synthesis of utilities to satisfy the demand, for example in [1] and [2]. The present study focuses on how disturbances in utilities affect production. Since utilities often are used plant-wide, disturbances in the supply of utilities may affect large parts of a site, either directly or indirectly because of the connections of production areas via the product flow. A general method for handling disturbances in utilities has recently been proposed in [3]. The method is called the utility disturbance management (UDM) method. In the present study, this framework is applied to an industrial site at Perstorp. The objectives are to obtain an indication of which utilities that cause the greatest revenue losses at the site, and to suggest strategies for reducing these losses. To complete all steps of the UDM method, a model of the production site is needed. Chemical plants are often complex, and thus difficult and time-consuming to model in detail. Here, a simple modeling approach is used, in which production areas at a site are modeled as either 'on' or 'off', i.e. either producing at maximum production rate or not at all. Buffer tanks between areas are also included. If a production area has to be shut down due to a utility disturbance, buffer tanks will allow production to continue for a certain period in downstream areas, before it is necessary to shut down these areas as well. This coarse model will not capture all the variability, but has shown to be useful in providing indications of the effects of disturbances in utilities on production.

II. The UDM method

The UDM method, introduced in [3], aims to reduce the economic effects of disturbances in utilities. The method consists of four steps:

1) Get information on site-structure and utilities
2) Compute utility and area availabilities
3) Estimate revenue loss due to disturbances in utilities
4) Reduce revenue loss due to future disturbances in utilities

Each of the steps have a number of sub-steps, which are defined in [3]. In the case study at Perstorp, the method is applied using an on/off production modeling approach including buffer tanks between production areas. A case study has previously been performed at the same production site using on/off production modeling without including buffer tanks. The results from this study are presented in [4].

III. Main results of case study

The site that is studied is a site owned by Perstorp that produces specialty chemicals, and is located in Stenungsund, Sweden. The site consists of 10 production areas, producing products 1-10. Internal buffer tanks exist for products 1-5. A flowchart ot the product flow at the site is shown in Figure 1.

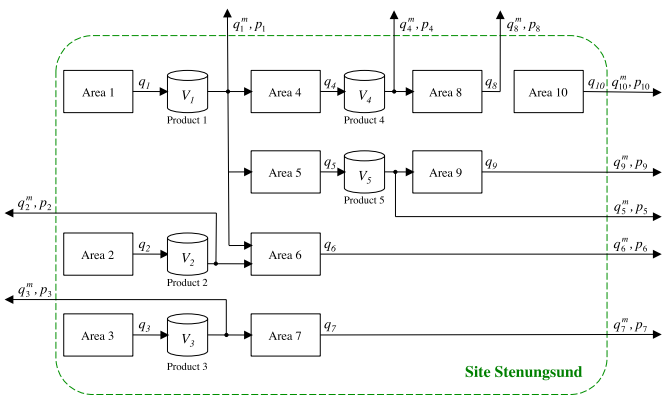

Fig. 1. Product flow at site Stenungsund.

The site is modeled by on/off production including buffer tanks. This gives ordering of utilities according to an estimate of the revenue loss they cause, which could be of great help for proactive disturbance management, i.e. when trying to reduce the number of disturbances in the future. At site Stenungsund, use of the UDM method showed that the cooling water utility seems to cause the greatest loss of all utilities at the site. In addition to this, two strategies for decreasing the revenue loss due to utilities are obtained. The first is suggestions on how buffer tank levels should be chosen to minimize the effects of disturbances in utilities (proactive disturbance management), and the second is suggestions on how to control the production at the occurrence of a utility disturbance (reactive disturbance management). Below, these two strategies are discussed.

A. Choice of buffer tank levels

Good choices of stationary buffer tank levels can ensure that the site can run even at a failure in one or more areas. In this case study, it has been chosen to only consider downstream effects of a disturbance upstream of a buffer tank. Thus, only lower constraints on the buffer tank levels will be imposed, and there will be a trade-off between handling as many failures as possible and minimizing inventory at the

site. This work does not focus on computing the costs of the inventories to achieve the optimal trade-off between utility disturbance management and cost of inventory. Optimal choice of inventory is discussed in e.g. [5] and [6].

Choosing the buffer tank levels to handle the longest disturbance durations for utilities will often give unneccesarily high buffer tank levels at normal operation, since disturbances of such long durations often are very uncommon. A suggestion is to choose the levels so that a certain percentage of all disturbances in utilities are handled. In Figure 2, the levels that correspond to handling 90 % of all disturbances in utilities at site Stenungsund are given, based on measurement data from Aug 1, 2007 to July 1, 2010. As a comparison, the average buffer tank levels over the considered time period are shown in the figure. It can be seen that the average buffer

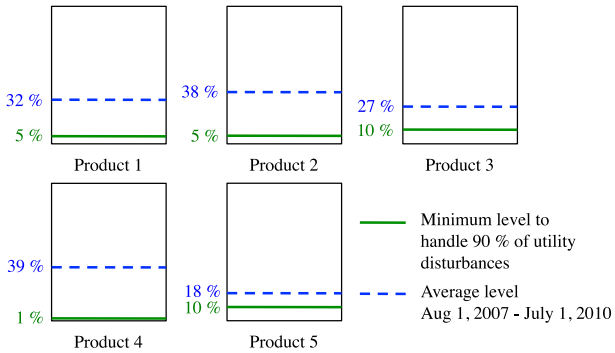

Fig. 2. Buffer tank levels at site Stenungsund.

tank levels over the selected time period are well above the levels required to handle 90 % of all disturbances in utilities. However, the buffer levels are not chosen only to handle disturbances in utilities, but to handle all disturbances at the site and to provide inventory of products to be sold to the market. This must be taken into account to evaluate if the buffer tank levels are appropriately chosen. The constraints from disturbances in utilities give one piece that has to be taken into account when choosing desired buffer tank levels.

If upstream disturbances also are taken into account, disturbances that affect a downstream area of a buffer tank, but not all upstream areas, will impose high-level constraints on some buffer tanks.

B. Control of the product flow

At the occurrence of a disturbance, a decision must be taken on how to control the product flow if the area that suffers a failure has more than one downstream area. Guidelines for how to control the product flow at a utility disturbance that affect an area, but not all its downstream areas, are obtained when using on/off production modeling including buffer tanks. Given the estimated disturbance duration, suggestions for the time that each downstream area should be run during the failure are obtained. The prioritization order of areas in the guidelines are determined from the profitability of the downstream areas. The suggestion is to let the operators at the site estimate the disturbance duration at the occurrence of a disturbance, and use this to compute the guidelines. The guidelines can be recomputed if the estimate of the disturbance time changes. Over time, contribution margins for different products could change, which makes it necessary to change the prioritization order of areas.

IV. Conclusions and Future Work

The case study at Perstorp presented in this paper gives ordering of utilities at the site according to an estimate of the loss of revenue they cause, using an on/off modeling approach with buffer tanks between areas. This list can be used to determine on which utilities improvement efforts should be focused. The case study also resulted in suggestions on how to choose the buffer tank levels and how to control the production at utility disturbances. It should be noted that only disturbances in utilities have been considered. This is only one piece of the entire picture, where also market conditions, cost of inventories and other disturbances must be taken into account. This case study shows which constraints disturbances in utilities place on buffer tank levels and product flow control.

The on/off production modeling approach including buffer tanks should give more accurate estimates of the losses that are caused by utilities at a site than the on/off model without buffer tanks. However, areas are still modeled as on or off, and thus the site model does not adequately reflect the actual production. To catch more of the variability, the site should be modeled using a continuous production model. Continuous production modeling of a site is currently being investigated, and will also be applied to the Perstorp site in Stenungsund. With continuous production, more elaborate reactive disturbance management strategies may be obtained, that gives real-time advise to operators on how to control the product flow at the occurrence of a disturbance.

Acknowledgments

This research was performed within the framework of the Process Industrial Centre at Lund University (PIC-LU), which is supported by the Swedish Foundation for Strategic Research (SSF).

References

[1] S. A. Papoulias and I. E. Grossmann, “A structural optimization approach in process synthesis–ı : Utility systems,” *Computers & Chemical Engineering*, vol. 7, no. 6, pp. 695–706, 1983.

[2] L. O. A. Maia, L. A. V. de Carvalho, and R. Y. Qassim, “Synthesis of utility systems by simulated annealing,” *Computers & Chemical Engineering*, vol. 19, no. 4, pp. 481–488, 1995.

[3] A. Lindholm, H. Carlsson, and C. Johnsson, “A general method for handling disturbances on utilities in the process industry,” in *proceedings of the 18th World Congress of the International Federation of Automatic Control (IFAC), Milano, Italy*, pp. 2761–2766, 2011.

[4] A. Lindholm, H. Carlsson, and C. Johnsson, “Estimation of revenue loss due to disturbances on utilities in the process industry,” in *proceedings of the 22nd Annual Conference of the Production and Operations Management Society (POMS), Reno, NV, USA*, 2011.

[5] D. D. Newhart, K. L. Stott Jr., and F. J. Vasko, “Consolidating product sizes to minimize inventory levels for a multi-stage production and distribution system,” *The Journal of the Operational Research Society*, vol. 44, no. 7, pp. 637–644, 1993.

[6] W. J. Hopp, N. Pati, and P. C. Jones, “Optimal inventory control in a production flow system with failures,” *International Journal of Production Research*, vol. 27, no. 8, pp. 1367–1384, 1989.