LUND UNIVERSITY

Stimulated emission in the ultraviolet by optical pumping from photoionization-produced inner-shell states in Cd$+$

Silfvast, W. T.; Wood II, O. R.; Lundberg, Hans; Macklin, J. J.

Published in:
Optics Letters

DOI:
10.1364/OL.10.000122

1985

Link to publication

Citation for published version (APA):
Silfvast, W. T., Wood II, O. R., Lundberg, H., & Macklin, J. J. (1985). Stimulated emission in the ultraviolet by optical pumping from photoionization-produced inner-shell states in Cd$+$. *Optics Letters*, *10*(3), 122-124. https://doi.org/10.1364/OL.10.000122

Total number of authors:
4

General rights
Unless other specific re-use rights are stated the following general rights apply:
Copyright and moral rights for the publications made accessible in the public portal are retained by the authors and/or other copyright owners and it is a condition of accessing publications that users recognise and abide by the legal requirements associated with these rights.
• Users may download and print one copy of any publication from the public portal for the purpose of private study or research.
• You may not further distribute the material or use it for any profit-making activity or commercial gain
• You may freely distribute the URL identifying the publication in the public portal

Read more about Creative commons licenses: https://creativecommons.org/licenses/

Take down policy
If you believe that this document breaches copyright please contact us providing details, and we will remove access to the work immediately and investigate your claim.

LUND UNIVERSITY

PO Box 117
221 00 Lund
+46 46-222 00 00

Stimulated emission in the ultraviolet by optical pumping from photoionization-produced inner-shell states in Cd^+

W. T. Silfvast, O. R. Wood II, H. Lundberg,* and J. J. Macklin

AT&T Bell Laboratories, Holmdel, New Jersey 07733

Received September 27, 1984; accepted December 21, 1984

Stimulated emission on three UV transitions in Cd^+ has been observed by transferring population from inner-shell d-electron states, populated by photoionization, to outer-shell p-electron states using the output from a narrow-frequency dye laser. The use of similar techniques in other elements could eventually result in a number of new lasers in the UV and VUV.

Stimulated emission at 231.2, 257.3, and 274.8 nm in Cd^+ has been observed for the first reported time by transferring population from inner-shell (core-excited) d-electron states, populated by photoionization, to outer-shell p-electron states using the output from a narrow-frequency dye laser tuned to relatively weak core-linking transitions. Gain coefficients as high as 3 cm^{-1} at 274.8 nm have been observed. Population-inversion densities between the $4d^95s^2$ and $4d^{10}5p$ states of Cd^+ greater than 10^{14} cm^{-3} had been previously obtained by broadband soft-x-ray photoionization of Cd vapor with laser-produced plasmas,[1] and similar large population inversions were observed recently in Zn^+.[2] In this Letter we demonstrate that transfer of such populations to higher-lying states by optical pumping with tunable dye lasers can lead to shorter-wavelength lasers. This same pumping technique could also be applied to Hg and Zn as well as to other elements that have a similar inner-shell electronic configuration.

An energy-level diagram for transfer-pumped photoionization lasers in Cd^+ is shown in Fig. 1. The normal Cd^+ levels, identified in Fig. 1 as belonging to the $4d^{10}$ manifold,[3] involve a closed $4d^{10}$ subshell and a single outer electron. The core-excited Cd^+ levels, identified in Fig. 1 as belonging to the $4d^9$ manifold,[3] involve a partially filled d subshell and a closed $5s^2$ subshell. Optical coupling between these two manifolds is generally weak (e.g., the oscillator strength of the $4d^95s^2\ ^2D$–$4d^105p\ ^2P^\circ$ laser transition at 441.6 nm is about 0.005)[4] because most transitions involve a change of two electrons. The population inversions reported in this Letter are the result of two steps of narrow-frequency optical transfer. The first step involved the transfer of population from inner-shell $4d^95s^2\ ^2D$ states to higher-lying core-filled $4d^{10}6p\ ^2P^\circ$ states using a dye laser that provided intensities well above the estimated saturation intensities (10–100 W/cm^2) for the core-linking transitions. When the dye laser was present, the transfer rate out far exceeded the photoionization rate in, thus precluding large population buildup in the $4d^9\ 5s^2$ level. The core-linking $4d^{10}6p\ ^2P_{3/2}$–$4d^95s^2\ ^2D_{5/2}$ transition at 382.6 nm had been observed previously in emission[5]; however, the core-linking $4d^{10}6p\ ^2P_{1/2}$–$4d^95s^2\ ^2D_{3/2}$ transition at 504.4 nm is so weak that it had not previously been reported in the spectroscopic literature. The second optical-pumping step involved the transfer of population from these $4d^{10}6p\ ^2P^\circ$ states to lower-lying $4d^{10}6s\ ^2S$ and $5d\ ^2D$ states by amplified spontaneous emission (ASE) produced within the pumping volume at 806.7, 853.0, and 2000 nm. This resulted in a population inversion between $4d^{10}6s\ ^2S$ and $5d\ ^2D$ states, which serve as the upper-laser levels for the ultraviolet lasers, and the lower-lying $5p\ ^2P^\circ$ states.

The experimental arrangement used to demonstrate stimulated emission in the UV by transfer pumping from inner-shell states in Cd^+ is similar to that used to produce soft-x-ray-pumped Li^+ metastable states[6] and to obtain photoionization lasers in Cd (Ref. 1) and Zn.[2] A 2.5-cm-diameter. heat pipe in the form of a cross provided Cd vapor at pressures from 1 to 10 Torr. A 200-mJ, 10-nsec pulse from a Nd:YAG laser, focused

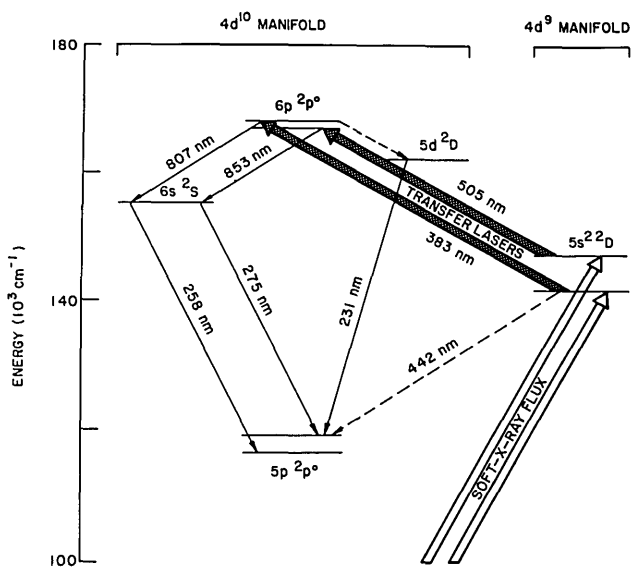

Fig. 1. Energy-level diagram for transfer-pumped Cd photoionization lasers.

0146-9592/85/030122-03$2.00/0 © 1985, Optical Society of America

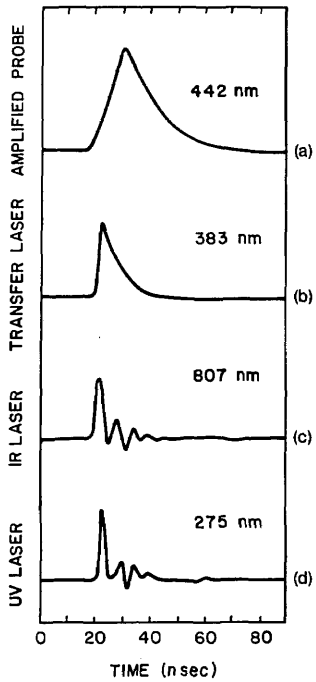

Fig. 2. Time dependence of (a) amplified cw probe laser at 441.6 nm, (b) dye laser used for transfer at 382.7 nm, (c) ASE at 806.7 nm, and (d) stimulated emission at 274.8 nm.

with a 25-cm focal-length lens through one arm of the cross to a 0.1-mm-diameter spot onto a W target inside the heat pipe, created a source of soft x rays at the target surface having an approximate 15-eV blackbody distribution. The resulting population in the core-excited inner d-electron states was monitored by passing a beam from a cw He–Cd probe laser, operating on the $4d^95s^2\ ^2D$–$4d^{10}5p\ ^2P$ transition at 441.6 nm, through the Cd vapor near the soft-x-ray source. Transfer of population from the $4d^95s^2$ states was accomplished by passing the unfocused output (beam diameter ~ 1 mm) from a dye laser that provided 1–10-mJ, 5-nsec pulses in a bandwidth of 0.3 cm^{-1} at 382.7 or 504.4 nm down the other axis of the cross through the Cd vapor at a distance approximately 5 mm from the soft-x-ray source. The resulting UV emission pulses from Cd vapor were observed at a slight angle to the dye-laser beam (to minimize scattered light) with a photomultiplier and oscilloscope arrangement having a 2-nsec rise time.

Curve (a) of Fig. 2 shows the time dependence of the small-signal gain on the $4d^95s^2$–$4d^{10}5p$ transition at 441.6 nm produced by photoionizing the Cd vapor with the soft-x-ray flux as measured with the probe beam from the He–Cd laser. Curve (b) shows the time dependence of the 382.7-nm dye-laser output used for the first transfer step. The transfer pulse from the dye laser was timed to occur early with respect to the soft-x-ray photoionizing pulse from the Nd:YAG laser. This was done to ensure that as much of the population in the $5s^2$ state as possible was transferred up to $6p$ rather than leaking downward to $5p$ by ASE at 441.6 nm since this process could reduce or destroy an inversion from $6s$ or $5d$. Curve (c) shows the temporal behavior of the resulting stimulated emission pulse at 806.7 nm observed in the forward direction (stimulated emission at 806.7 nm exhibited a 20 to 1 forward/backward intensity asymmetry) when the dye laser was tuned to 382.7 ± 0.3 nm. Curve (d) shows the temporal behavior of the emission at 274.8 nm when both steps of optical pumping were at maximum intensity. Increases in intensity of up to 2000 were observed on this transition when the transfer laser was present. The trace shown in curve (d) is typical of the emission observed at all three UV wavelengths. The duration of the stimulated-emission pulses at both wavelengths [curves (c) and (d)] is seen to be significantly shorter than the duration of the inversion between the $5s^2$ and $5p$ states [curve (a)]. In fact, when a detection system with a 300-psec rise time was used, the observed duration of the strong stimulated-emission pulse at 806.7 nm was found to be of the order of 400 psec. Thus the pulse ringing shown in curves (c) and (d) is an artifact of the detection circuit and is probably due to a relaxation oscillation of the detector when it is subjected to such short optical pulses.

Figure 3(a) is a plot of the infrared-emission intensity at 853.0 nm as a function of the 504.4-nm transfer laser intensity. Before the onset of stimulated emission, the emission at 853.0 nm increases linearly with transfer laser intensity. At this point [indicated by the arrow in Fig. 3(a)] the emission grows nonlinearly by 3 orders of magnitude and then resumes a saturated growth with increasing transfer laser intensity. The 1000-fold increase in intensity corresponds to a gain coefficient of a least 6.9 cm^{-1} at 853.0 nm. Figure 3(b) is a plot of the UV emission at 274.8 nm versus the intensity of the stimulated emission pulse at 806.7 nm that populates the upper laser level. Because the timing of the 806.7-nm pulse and the dye-laser pulse at 382.7 nm could not be independently adjusted, the emission at 274.8 could not be optimized. Even so, when taken together, the observed pulse shape [curve (d) of Fig. 2] and the nonlinear dependence of the UV emission intensity on the pumping intensity [Fig. 3(b)] are strong evidence that gain resulting from stimulated emission is present at 274.8 nm. The magnitude of the nonlinear growth of the emission shown in Fig. 3(b) corresponds to a gain coefficient at 274.8 nm as high as 2–3 cm^{-1}

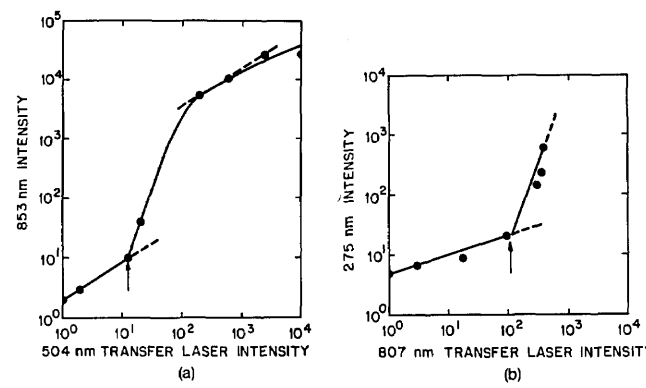

Fig. 3. Emission at (a) 853.0 nm as a function of 504.4-nm transfer laser intensity and (b) 274.8 nm as a function of 806.7-nm ASE intensity.

(similar values for gain were found at 257.8 and 231.2 nm). In addition, the emission at all three UV wavelengths exhibited the large intensity fluctuations that would be expected from stimulated emission with small fluctuations in the gain.

The 20-times-higher intensity of the 806.7-nm pulse in the direction of the 382.7-nm transfer laser than in the opposite direction could be explained either by ASE, through traveling-wave excitation, or by stimulated Raman emission, which can result in an asymmetric gain profile with respect to pump direction.[7] It is difficult to distinguish between these two effects when the pumping laser is at or near resonance.

In order to determine if the experimental results were consistent with ASE, a four-level rate-equation model was developed to predict the temporal behavior of the emission at 806.7 and 274.8 nm in response to a transfer laser beam at 382.7 nm. Values for the spontaneous-emission rates for the four levels (the $5p$, $5s^2$, $6s$, and $6p$ levels of Cd^+) were taken from the literature. Collisional rates were assumed to be small compared with spontaneous rates. Transition linewidths were taken equal to the Doppler widths except for transitions for which power broadening by the high-intensity transfer laser was large. The initial population in the $5s^2$ level was taken from a gain measurement at 441.6 nm. The initial population in the $5p$ level was determined from an absorption measurement at 274.8 nm. The initial populations in the other two levels were estimated from relative intensity measurements. The length of the medium was taken to be 1 cm (the gain length for the 441.6-nm photoionization laser).

According to this simple model, emission at 806.7 nm (and 274.8 nm) begins to grow nonlinearly if and only if the 382.7-nm dye laser transfers enough population from $5s^2$ to $6p$ to create a population inversion between $6p$ and $6s$. Because the stimulated-emission cross section on the $6p$–$6s$ transition is high (2×10^{-11} cm^2), when the transfer laser intensity at 382.7 nm is sufficiently high the small-signal gain on the $6p$–$6s$ transition at 806.7 nm rises rapidly. This rapidly rising gain results in an emission pulse at 806.7 nm that peaks 0.4 nsec after the start of the 382.7-nm dye-laser pulse and that consists of a 3-kW/cm^2 peak-power pulse of 200-psec duration followed by a 150-W/cm^2 tail lasting for several nanoseconds. The amplitude, duration, and timing of this pulse are consistent with the observations at 806.7 nm. The 20-to-1 forward/backward amplitude asymmetry could be accounted for by including the effects of swept gain in the model. The model predicts that the emission at 274.8 nm should rise 10 to 20 times above the spontaneous-emission level for fractions of a nanosecond and that it should be slightly delayed with respect to the 806.7-nm pulse. No sharp pulsing was indicated in the model in the absence of gain. The short duration of the gain, together with the length of the heat pipe, prevented the use of resonator mirrors.

The generation of the new VUV lasers may be possible in Cd^+ by using two-step transfer techniques. For example, in a process identical with that described above, population could be transferred from the inner-shell $4d^9 5s^2\ {}^2D$ state to the $4d^{10}7p\ {}^2P^\circ$ state by using a dye laser tuned to 266.8 nm, leading to ASE at 4571.3 nm and stimulated emission at 151.4 nm. Alternatively, a two-step process to reach the $4d^{10}6d$ state through an intermediate $4d^{10}6p$ state using dye lasers tuned to 382.7 and 673.0 nm could lead to stimulated emission at 157.2 nm.

The authors gratefully acknowledge helpful discussions with E. P. Ippen, R. W. Falcone, B. Wellegehausen, and R. G. Caro.

* Present address, Lund Institute of Technology, Lund, Sweden.

References

1. W. T. Silfvast, J. J. Macklin, and O. R. Wood II, Opt. Lett. **8**, 551 (1983).
2. H. Lundberg, J. J. Macklin, W. T. Silfvast, and O. R. Wood II, Appl. Phys. Lett. **45**, 335 (1984).
3. C. E. Moore, *Atomic Energy Levels* (U.S. Government Printing Office, Washington, D.C., 1958), Vol. III, p. 59.
4. Y. F. Verolainen and V. I. Privalov, Opt. Spectrosc. **48**, 245 (1980).
5. A. G. Shenstone and J. T. Pittenger, J. Opt. Soc. Am. **39**, 219 (1949).
6. R. G. Caro, J. C. Wang, R. W. Falcone, J. R. Young, and S. E. Harris, Appl. Phys. Lett. **42**, 9 (1983).
7. N. Skribanowitz, M. Feld, R. E. Francke, M. J. Kelly, and A. Javan, Appl. Phys. Lett. **19**, 161 (1971).