LUND UNIVERSITY

Transient electromagnetic wave propagation in laterally discontinuous, dispersive media

Egorov, Igor; Kristensson, Gerhard; Weston, Vaughan H

1996

Link to publication

Citation for published version (APA):
Egorov, I., Kristensson, G., & Weston, V. H. (1996). *Transient electromagnetic wave propagation in laterally discontinuous, dispersive media*. (Technical Report LUTEDX/(TEAT-7046)/1-24/(1996); Vol. TEAT-7046). [Publisher information missing].

Total number of authors:
3

General rights
Unless other specific re-use rights are stated the following general rights apply:
Copyright and moral rights for the publications made accessible in the public portal are retained by the authors and/or other copyright owners and it is a condition of accessing publications that users recognise and abide by the legal requirements associated with these rights.
• Users may download and print one copy of any publication from the public portal for the purpose of private study or research.
• You may not further distribute the material or use it for any profit-making activity or commercial gain
• You may freely distribute the URL identifying the publication in the public portal

Read more about Creative commons licenses: https://creativecommons.org/licenses/

Take down policy
If you believe that this document breaches copyright please contact us providing details, and we will remove access to the work immediately and investigate your claim.

LUND UNIVERSITY

PO Box 117
221 00 Lund
+46 46-222 00 00

CODEN:LUTEDX/(TEAT-7046)/1-24/(1996)

Revision No. 1: April 1998

Transient electromagnetic wave propagation in laterally discontinuous, dispersive media

Igor Egorov, Gerhard Kristensson and Vaughan H. Weston

Department of Electroscience
Electromagnetic Theory
Lund Institute of Technology
Sweden

Igor Egorov and Gerhard Kristensson

Department of Electromagnetic Theory
Lund Institute of Technology
P.O. Box 118
SE-221 00 Lund
Sweden

Vaughan H. Weston

Department of Mathematics
Purdue University
West Lafayette, IN 47907
USA

Editor: Gerhard Kristensson
© Igor Egorov *et al.*, Lund, April 14, 1998

Abstract

This paper concerns propagation of transient electromagnetic waves in laterally discontinuous dispersive media. The approach, used here, employs a component decomposition of all fields. Specifically, the propagation operator that maps a transverse field on one plane to another plane is specified. Expansion of this mapping near the wave front determines the precursor or forerunner of the problem.

1 Introduction

In a series of papers, wave propagation of transient scalar waves in inhomogeneous media has been analyzed [5–8]. This analysis has later been extended such that media with dispersion are allowed [3]. The wave splitting of the Maxwell equations was recently done by Weston [9]. The purpose of this paper is to generalize the results in these papers to include also laterally discontinuous, dispersion effects in the vector case. In this first paper the scalar wave splitting is exploited. The vector splitting is presented in a subsequent paper.

The results presented in this paper have applications in electromagnetic wave propagation of pulses in optical fibers. This problem has not been possible to analyze with the existing scalar formulations.

The scalar wave equation with dispersion was treated in Ref. 3. The pertinent equation is

$$\Box u(\boldsymbol{r},t) + b(\boldsymbol{r})\frac{\partial u}{\partial t}(\boldsymbol{r},t) + \frac{\partial^2}{\partial t^2}\left(\chi(\boldsymbol{r},\cdot) * u(\boldsymbol{r},\cdot)\right)(t) = 0, \tag{1.1}$$

where $\Box$ is the wave propagation operator

$$\Box = \frac{1}{c^2(\boldsymbol{r})}\frac{\partial^2}{\partial t^2} - \nabla^2 = \frac{1}{c^2(\boldsymbol{r})}\frac{\partial^2}{\partial t^2} - \frac{\partial^2}{\partial x^2} - \frac{\partial^2}{\partial y^2} - \frac{\partial^2}{\partial z^2},$$

and where $*$ denotes temporal convolution

$$\left(\chi(\boldsymbol{r},\cdot) * u(\boldsymbol{r},\cdot)\right)(t) = \int_{-\infty}^{t} \chi(\boldsymbol{r},t-t')u(\boldsymbol{r},t')\,dt'.$$

In this paper we use italic bold face to denote vectors. The space vector $\boldsymbol{r}$ in $\mathbb{R}^3$ and $\boldsymbol{\rho}$ in $\mathbb{R}^2$ are

$$\begin{cases} \boldsymbol{r} = x\hat{x} + y\hat{y} + z\hat{z}, \\ \boldsymbol{\rho} = x\hat{x} + y\hat{y}, \end{cases}$$

respectively. The lengths of these vectors are denoted

$$\begin{cases} r = \sqrt{x^2+y^2+z^2} = |\boldsymbol{r}|, \\ \rho = \sqrt{x^2+y^2} = |\boldsymbol{\rho}|. \end{cases}$$

The wave splitting of the principal part of equation (1.1) is analyzed in Ref. 5. The Neumann to Dirichlet operator, $\mathcal{K}_\alpha$, maps Neumann data on the plane $z = \alpha$ to Dirichlet data on that plane [5]. The appropriate half-space, initial value problem associated with this mapping is

$$\begin{cases} \dfrac{1}{c^2(\boldsymbol{\rho},\alpha)}\dfrac{\partial^2 u}{\partial t^2}(\boldsymbol{r},t) - \nabla^2 u(\boldsymbol{r},t) = 0, \quad \alpha < z < \infty, 0 < t < T, \\ u(\boldsymbol{r},0) = \dfrac{\partial u}{\partial t}(\boldsymbol{r},0) = 0, \quad \alpha < z < \infty, \\ \dfrac{\partial u}{\partial z}(\boldsymbol{r},t)\Big|_{z=\alpha} = v(\boldsymbol{\rho},t), \quad 0 < t < T, \end{cases}$$

where $v(\boldsymbol{\rho},t)$ is Neumann data given on the plane $z = \alpha$, which is assumed to be compactly supported in $\mathbb{R}^2$. The limit $z \to \alpha^+$ of the solution u defines an operator such that on the plane $z = \alpha$,

$$u(\boldsymbol{\rho},\alpha,t) = -\left(\mathcal{K}_\alpha v\right)(\boldsymbol{\rho},t), \quad 0 < t < T. \tag{1.2}$$

This relation defines the up-going wave condition. We use the calligraphic font to denote operators throughout this paper. Similarly, by studying a lower half-space problem, a down-going wave condition is defined.

$$u(\boldsymbol{\rho},\alpha,t) = \left(\mathcal{K}_\alpha v\right)(\boldsymbol{\rho},t), \quad 0 < t < T. \tag{1.3}$$

In a medium with constant wave front velocity, $c(\boldsymbol{r}) = c$, the Neumann to Dirichlet operator is independent of α, $\mathcal{K}_\alpha = \mathcal{K}$. An explicit integral representation of the operator $\mathcal{K}$ is [5]

$$\mathcal{K}f(\boldsymbol{r},t) = \iint\limits_{\mathbb{R}^2} \frac{f(\boldsymbol{\rho}',z,t-|\boldsymbol{\rho}-\boldsymbol{\rho}'|/c)}{2\pi|\boldsymbol{\rho}-\boldsymbol{\rho}'|}\, d\boldsymbol{\rho}'.$$

The variable z is only a parameter in this equation. The corresponding integral kernel $K(\boldsymbol{\rho},t;\boldsymbol{\rho}',t')$ to the operator $\mathcal{K}$ is

$$\mathcal{K}f(\boldsymbol{r},t) = \int_0^\infty \iint\limits_{\mathbb{R}^2} K(\boldsymbol{\rho},t;\boldsymbol{\rho}',t') f(\boldsymbol{\rho}',z,t')\, d\boldsymbol{\rho}'\, dt',$$

where

$$K(\boldsymbol{\rho},t;\boldsymbol{\rho}',t') = \frac{\delta(t-t'-|\boldsymbol{\rho}-\boldsymbol{\rho}'|/c)}{2\pi|\boldsymbol{\rho}-\boldsymbol{\rho}'|}.$$

The Neumann to Dirichlet operator $\mathcal{K}$ satisfies [5]

$$\mathcal{K}^{-1} = \mathcal{K}\Box_T, \tag{1.4}$$

where the transverse D'Alembertian is

$$\Box_T = \frac{1}{c^2}\frac{\partial^2}{\partial t^2} - \frac{\partial^2}{\partial x^2} - \frac{\partial^2}{\partial y^2}.$$

Introduce the scalar wave splitting [3]

$$\begin{pmatrix} u^+(\boldsymbol{r},t) \\ u^-(\boldsymbol{r},t) \end{pmatrix} = \frac{1}{2}\begin{pmatrix} 1 & -\mathcal{K} \\ 1 & \mathcal{K} \end{pmatrix}\begin{pmatrix} u(\boldsymbol{r},t) \\ \frac{\partial}{\partial z}u(\boldsymbol{r},t) \end{pmatrix}, \quad 0 < t < T. \tag{1.5}$$

The wave equation, (1.1), can be written as a system of first order equations in z.

$$\frac{\partial}{\partial z}\begin{pmatrix} u(\boldsymbol{r},t) \\ \frac{\partial}{\partial z}u(\boldsymbol{r},t) \end{pmatrix} = \left[\begin{pmatrix} 0 & 1 \\ \Box_T & 0 \end{pmatrix} + \begin{pmatrix} 0 & 0 \\ b(\boldsymbol{r})\frac{\partial}{\partial t} + \chi(\boldsymbol{r},\cdot) * \frac{\partial^2}{\partial t^2} & 0 \end{pmatrix}\right]\begin{pmatrix} u(\boldsymbol{r},t) \\ \frac{\partial}{\partial z}u(\boldsymbol{r},t) \end{pmatrix}.$$

With the wave splitting, (1.5), this equation transforms into [6]

$$\frac{\partial}{\partial z}\begin{pmatrix} u^+ \\ u^- \end{pmatrix} = \left[\mathcal{K}^{-1}\begin{pmatrix} -1 & 0 \\ 0 & 1 \end{pmatrix} + \frac{1}{2}\mathcal{K}\left(b(\boldsymbol{r})\frac{\partial}{\partial t} + \chi(\boldsymbol{r},\cdot) * \frac{\partial^2}{\partial t^2}\right)\begin{pmatrix} -1 & -1 \\ 1 & 1 \end{pmatrix}\right]\begin{pmatrix} u^+ \\ u^- \end{pmatrix}.$$

2 Basic equations in the electromagnetic case

The half-space $z > 0$ is denoted $\mathcal{D} \in \mathbb{R}^3$. Let S denote a surface, with bounded or unbounded cross section Ω in the x-y-plane[1]. The surface S is assumed to be smooth, e.g., a C^2 surface. Furthermore, the normal $\hat{n}$ is assumed to be parallel to the x-y-plane everywhere. Therefore the cross-section Ω is independent of z. The surface can enclose a bounded region in the x-y-plane, see Figure 1a), or an unbounded region as depicted in Figure 1b). This surface is the boundary surface between the two different materials of the problem. The domain inside (outside) the surface, wrt the direction of the normal $\hat{n}$, is denoted $\mathcal{D}^-(\mathcal{D}^+) \in \mathbb{R}^3$. We have $\mathcal{D} = \mathcal{D}^+ \cup \mathcal{D}^- \cup S$.

The source-free Maxwell equations are

$$\begin{cases} \nabla \times \boldsymbol{E}(\boldsymbol{r},t) = -\dfrac{\partial \boldsymbol{B}}{\partial t}(\boldsymbol{r},t), \\ \nabla \times \boldsymbol{H}(\boldsymbol{r},t) = \dfrac{\partial \boldsymbol{D}}{\partial t}(\boldsymbol{r},t). \end{cases} \tag{2.1}$$

All fields in this paper are assumed to be quiescent before a fixed time. This property guarantees that all fields vanish at $t \to -\infty$. The appropriate constitutive relations in this paper are

$$\begin{cases} \boldsymbol{D}(\boldsymbol{r},t) = \epsilon\left[\boldsymbol{E}(\boldsymbol{r},t) + \left(\chi(\boldsymbol{r},\cdot) * \boldsymbol{E}(\boldsymbol{r},\cdot)\right)(t)\right], \\ \boldsymbol{B}(\boldsymbol{r},t) = \mu\boldsymbol{H}(\boldsymbol{r},t). \end{cases} \tag{2.2}$$

where the susceptibility kernel $\chi(\boldsymbol{r},t)$ models the electric dispersive effects (memory effects) of the material. The instantaneous electric and magnetic responses are modeled by the permittivity constant ϵ, and the permeability constant μ, respectively.

[1]The generalization to more than one surface S is straightforward.

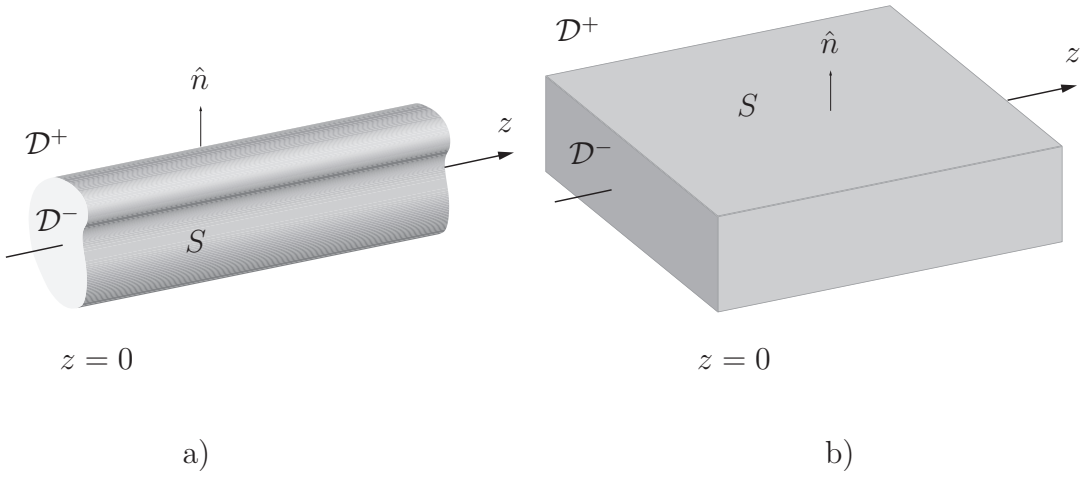

Figure 1: Two examples of geometry relevant to the problem of this paper.

In this paper the susceptibility kernel $\chi(\boldsymbol{r}, t)$ is assumed to be different functions of time in $\mathcal{D}^-$ and $\mathcal{D}^+$, respectively, which are twice continuously differentiable and vanish[2] at $t = 0$, i.e.,

$$\chi(\boldsymbol{r}, t) = \begin{cases} \chi^-(t), & \boldsymbol{r} \in \mathcal{D}_-, \\ \chi^+(t), & \boldsymbol{r} \in \mathcal{D}_+, \end{cases} \qquad \begin{cases} \chi^+, \chi^- \in C^2(0, \infty), \\ \chi^+(0) = \chi^-(0) = 0. \end{cases} \tag{2.3}$$

The susceptibility function therefore varies only with respect to the transverse coordinates $\boldsymbol{\rho}$ and time t and it is a piecewise constant function of $\boldsymbol{\rho}$. The values of the permittivity ϵ and permeability μ of the half space are the same both in $\mathcal{D}^-$ and in $\mathcal{D}^+$. The velocity of light, $c = 1/\sqrt{\epsilon\mu}$, is therefore the same constant throughout the half-space. The wave impedance of space is denoted $\eta = \sqrt{\mu/\epsilon}$.

The goal of this paper is to develop a new method adapted for wave propagation in three dimensions of transient electromagnetic fields in complex media. The specific problem addressed in this paper, is that of calculating the propagation of an excitation on the plane $z = 0$ into the medium $z > 0$. The most straightforward way is to use the Cartesian components of the fields. This is possible due to the assumption that the susceptibility function is piecewise constant as a function of the spatial variables.

3 Component decomposition

In this section an arbitrary vector field and the underlying equations are decomposed in their transverse and longitudinal components.

[2] An extension to $\chi^+(0) = \chi^-(0) \neq 0$ (same constant at $t = 0^+$) is possible.

All vector fields are decomposed into their longitudinal (the z-component of the field), and transverse components, e.g., for the electric field (a subscript T is used to denote the transverse components of a vector field)

$$\boldsymbol{E}(\boldsymbol{r},t) = \boldsymbol{E}_T(\boldsymbol{r},t) + \hat{z}E_z(\boldsymbol{r},t).$$

The decomposition of the Maxwell equations into their transverse and longitudinal parts is also easily found using the Maxwell equations, (2.1), and the constitutive relations, (2.2). The result is

$$\begin{cases} \hat{z}\cdot(\nabla_T \times \boldsymbol{E}_T(\boldsymbol{r},t)) = -\dfrac{1}{c}\dfrac{\partial}{\partial t}\eta H_z(\boldsymbol{r},t), \\ \hat{z}\cdot(\nabla_T \times \eta\boldsymbol{H}_T(\boldsymbol{r},t)) = \dfrac{1}{c}\dfrac{\partial}{\partial t}\left\{E_z(\boldsymbol{r},t) + (\chi(\boldsymbol{\rho},\cdot) * E_z(\boldsymbol{r},\cdot))(t)\right\}, \end{cases} \tag{3.1}$$

for the longitudinal parts, and for the transverse components the result is

$$\begin{cases} \dfrac{1}{c}\dfrac{\partial}{\partial t}\eta\boldsymbol{H}_T(\boldsymbol{r},t) + \hat{z}\times\dfrac{\partial}{\partial z}\boldsymbol{E}_T(\boldsymbol{r},t) = \hat{z}\times\nabla_T E_z(\boldsymbol{r},t), \\ \dfrac{1}{c}\dfrac{\partial}{\partial t}\Big\{\boldsymbol{E}_T(\boldsymbol{r},t) + (\chi(\boldsymbol{\rho},\cdot) * \boldsymbol{E}_T(\boldsymbol{r},\cdot))(t)\Big\} - \hat{z}\times\dfrac{\partial}{\partial z}\eta\boldsymbol{H}_T(\boldsymbol{r},t) \\ \qquad\qquad = -\hat{z}\times\nabla_T\eta H_z(\boldsymbol{r},t), \end{cases} \tag{3.2}$$

where two-dimensional gradient

$$\nabla_T = \hat{x}\frac{\partial}{\partial x} + \hat{y}\frac{\partial}{\partial y},$$

has been introduced.

By combining the Maxwell equations, (2.1), and the constitutive relations, (2.2), we get

$$\nabla\times(\nabla\times\boldsymbol{E}(\boldsymbol{r},t)) + \frac{1}{c^2}\frac{\partial^2}{\partial t^2}\left[\boldsymbol{E}(\boldsymbol{r},t) + (\chi(\boldsymbol{\rho},\cdot) * \boldsymbol{E}(\boldsymbol{r},\cdot))(t)\right] = \boldsymbol{0}.$$

The divergence of $\boldsymbol{E}$ is zero, provided $\boldsymbol{r}$ is not on the boundary S.

$$\nabla\cdot\boldsymbol{E}(\boldsymbol{r},t) = 0, \quad \boldsymbol{r}\notin S.$$

This follows from the assumption that the susceptibility function $\chi(\boldsymbol{\rho},t)$ is independent of the spatial variables in the regions $\mathcal{D}^{\pm}$, and the unique solubility of the resolvent of χ. This implies that

$$\nabla^2\boldsymbol{E}(\boldsymbol{r},t) - \frac{1}{c^2}\frac{\partial^2}{\partial t^2}\left[\boldsymbol{E}(\boldsymbol{r},t) + (\chi(\boldsymbol{\rho},\cdot) * \boldsymbol{E}(\boldsymbol{r},\cdot))(t)\right] = \boldsymbol{0}, \qquad \boldsymbol{r}\notin S.$$

Similarly, for the magnetic field $\boldsymbol{H}$

$$\nabla^2\boldsymbol{H}(\boldsymbol{r},t) - \frac{1}{c^2}\frac{\partial^2}{\partial t^2}\left[\boldsymbol{H}(\boldsymbol{r},t) + (\chi(\boldsymbol{\rho},\cdot) * \boldsymbol{H}(\boldsymbol{r},\cdot))(t)\right] = \boldsymbol{0}, \qquad \boldsymbol{r}\notin S.$$

Especially for the transverse components $\boldsymbol{E}_T$ we have

$$\nabla^2 \boldsymbol{E}_T(\boldsymbol{r},t) - \frac{1}{c^2}\frac{\partial^2}{\partial t^2}\left[\boldsymbol{E}_T(\boldsymbol{r},t) + \left(\chi(\boldsymbol{\rho},\cdot) * \boldsymbol{E}_T(\boldsymbol{r},\cdot)\right)(t)\right] = \boldsymbol{0}, \qquad \boldsymbol{r} \notin S. \tag{3.3}$$

Similarly, for $\boldsymbol{H}_T$:

$$\nabla^2 \boldsymbol{H}_T(\boldsymbol{r},t) - \frac{1}{c^2}\frac{\partial^2}{\partial t^2}\left[\boldsymbol{H}_T(\boldsymbol{r},t) + \left(\chi(\boldsymbol{\rho},\cdot) * \boldsymbol{H}_T(\boldsymbol{r},\cdot)\right)(t)\right] = \boldsymbol{0}, \qquad \boldsymbol{r} \notin S. \tag{3.4}$$

From the solution of the equation (3.3), we can construct all other components of the electric and magnetic fields. From the $\boldsymbol{E}_T$-field we can first construct H_z and $\boldsymbol{H}_T$ by using (3.1) and (3.2)

$$\begin{aligned}
\eta H_z(\boldsymbol{r},t) &= -c\int_{-\infty}^{t} \hat{z}\cdot\left(\nabla_T \times \boldsymbol{E}_T(\boldsymbol{r},t')\right)\, dt', \\
\eta \boldsymbol{H}_T(\boldsymbol{r},t) &= \eta \boldsymbol{H}_T(\boldsymbol{r},t)|_{z=0} + \int_0^z \nabla_T \eta H_z(\boldsymbol{\rho},z',t)\, dz' \\
&\quad - \frac{1}{c}\frac{\partial}{\partial t}\hat{z} \times \int_0^z \Big\{\boldsymbol{E}_T(\boldsymbol{\rho},z',t) + \left(\chi(\boldsymbol{\rho},\cdot) * \boldsymbol{E}_T(\boldsymbol{\rho},z',\cdot)\right)(t)\Big\}\, dz',
\end{aligned}$$

and finally from (3.1) we get

$$E_z = f(\boldsymbol{r},t) + (\psi(\boldsymbol{\rho},\cdot) * f(\boldsymbol{r},\cdot))(t),$$

where

$$f(\boldsymbol{r},t) = c\int_{-\infty}^{t} \hat{z}\cdot\left(\nabla_T \times \eta \boldsymbol{H}_T(\boldsymbol{r},t')\right)\, dt',$$

and $\psi(\boldsymbol{\rho},t)$ is the resolvent in time of $\chi(\boldsymbol{\rho},t)$.

The differential equations (3.3) and (3.4) do not couple different components of the field to each other. The coupling between different Cartesian components is made at the boundary S via the boundary conditions. These conditions are:

$$\begin{cases} \boldsymbol{n}\times\boldsymbol{E}, \\ \boldsymbol{n}\times\boldsymbol{H}, \end{cases} \qquad \begin{cases} \boldsymbol{n}\cdot\boldsymbol{D}, \\ \boldsymbol{n}\cdot\boldsymbol{B}, \end{cases} \quad \text{continuous across } S.$$

4 Fundamental solution and the field representation

In this section an integral representation of the transverse electric field $\boldsymbol{E}_T$ at a point $\boldsymbol{r} \in \mathcal{D}(z>0)$ in terms of the corresponding values of this field at the surface $z=0$ is developed.

The appropriate mixed initial boundary value problem for the electric field $\boldsymbol{E}$ is

$$\begin{cases} \nabla \times (\nabla \times \boldsymbol{E}(\boldsymbol{r},t)) + \dfrac{1}{c^2}\dfrac{\partial^2}{\partial t^2}\Big\{\boldsymbol{E}(\boldsymbol{r},t) + (\chi(\boldsymbol{\rho},\cdot) * \boldsymbol{E}(\boldsymbol{r},\cdot))\,(t)\Big\} = \boldsymbol{0}, \quad \boldsymbol{r} \in \mathcal{D}, \\ \boldsymbol{E}(\boldsymbol{r},t) = \boldsymbol{0}, \quad \boldsymbol{r} \in \mathcal{D}, t \leq 0, \\ \dfrac{\partial \boldsymbol{E}}{\partial t}(\boldsymbol{r},t) = \boldsymbol{0}, \quad \boldsymbol{r} \in \mathcal{D}, t \leq 0, \\ \hat{n} \times \boldsymbol{E}, \qquad \text{continuous across } S, \\ \hat{n} \times (\nabla \times \boldsymbol{E}), \qquad \text{continuous across } S, \\ \boldsymbol{E}_T(\boldsymbol{r},t)|_{z=0} = \boldsymbol{f}_T(\boldsymbol{\rho},t). \end{cases}$$

The data, $\boldsymbol{f}_T(\boldsymbol{\rho},t)$, specified on the plane $z = 0$ is assumed to be compactly supported in the variable $\boldsymbol{\rho}$.

The fundamental solution, $\mathcal{E}$, to our problem is the solution to the following PDE ($\boldsymbol{r}' \in \mathbb{R}^3, t' \in (-\infty,\infty)$):

$$\begin{cases} \nabla^2 \mathcal{E}(\boldsymbol{r},t;\boldsymbol{r}',t') - \dfrac{1}{c^2}\dfrac{\partial^2}{\partial t^2}\Big\{\mathcal{E}(\boldsymbol{r},t;\boldsymbol{r}',t') + (\chi(\boldsymbol{\rho},\cdot) * \mathcal{E}(\boldsymbol{r},\cdot;\boldsymbol{r}',t'))\,(t)\Big\} \\ \qquad = -\delta(\boldsymbol{r}-\boldsymbol{r}')\delta(t-t'), \quad \boldsymbol{r} \in \mathbb{R}^3, t \in (-\infty,\infty), \\ \mathcal{E}(\boldsymbol{r},t;\boldsymbol{r}',t'), \qquad \text{continuous across } S, \\ \dfrac{\partial}{\partial n}\mathcal{E}(\boldsymbol{r},t;\boldsymbol{r}',t'), \qquad \text{continuous across } S, \\ \mathcal{E}(\boldsymbol{r},t;\boldsymbol{r}',t') = 0, \quad t < t', \quad \boldsymbol{r} \in \mathbb{R}^3, \end{cases} \tag{4.1}$$

where the surface S for negative z-values is mirrored in the plane $z = 0$, and where the temporal convolution is

$$(\chi(\boldsymbol{\rho},\cdot) * \mathcal{E}(\boldsymbol{r},\cdot;\boldsymbol{r}',t'))\,(t) = \int_{t'}^{t} \chi(\boldsymbol{\rho},t-s)\mathcal{E}(\boldsymbol{r},s;\boldsymbol{r}',t')\,ds.$$

The existence proof for the solution $\mathcal{E}(\boldsymbol{r},t;\boldsymbol{r}',t')$ for (4.1) can be found in Appendix A. Due to temporal invariance and translational invariance in the z-direction, we have

$$\mathcal{E}(\boldsymbol{r},t;\boldsymbol{r}',t') = \mathcal{E}(\boldsymbol{\rho},\boldsymbol{\rho}',z-z',t-t').$$

Furthermore, the solution is even in $z - z'$. It can be shown that $\mathcal{E}(\boldsymbol{r},t;\boldsymbol{r}',t')$ has the form (see Appendix A)

$$\mathcal{E}(\boldsymbol{r},t;\boldsymbol{r}',t') = \frac{\delta\left(t-t'-|\boldsymbol{r}-\boldsymbol{r}'|/c\right)}{4\pi|\boldsymbol{r}-\boldsymbol{r}'|} + H\left(t-t'-|\boldsymbol{r}-\boldsymbol{r}'|/c\right)\Psi(\boldsymbol{r},t;\boldsymbol{r}',t'),$$

where Ψ is a continuous function.

The corresponding adjoint fundamental solution, $\mathcal{E}^\dagger$, to our problem is the solu-

tion to the problem ($\boldsymbol{r}' \in \mathbb{R}^3, t' \in (-\infty, \infty)$)

$$\begin{cases} \nabla^2 \mathcal{E}^\dagger(\boldsymbol{r}, t; \boldsymbol{r}', t') - \dfrac{1}{c^2}\dfrac{\partial^2}{\partial t^2}\Big\{\mathcal{E}^\dagger(\boldsymbol{r}, t; \boldsymbol{r}', t') + \big(\chi(\boldsymbol{\rho}, \cdot) \overline{*} \mathcal{E}^\dagger(\boldsymbol{r}, \cdot; \boldsymbol{r}', t')\big)(t)\Big\} \\ \qquad = -\delta(\boldsymbol{r} - \boldsymbol{r}')\delta(t - t'), \quad \boldsymbol{r} \in \mathbb{R}^3, t \in (-\infty, \infty), \\ \mathcal{E}^\dagger(\boldsymbol{r}, t; \boldsymbol{r}', t'), \qquad \text{continuous across } S, \\ \dfrac{\partial}{\partial n}\mathcal{E}^\dagger(\boldsymbol{r}, t; \boldsymbol{r}', t'), \qquad \text{continuous across } S, \\ \mathcal{E}^\dagger(\boldsymbol{r}, t; \boldsymbol{r}', t') = 0, \quad t > t', \quad \boldsymbol{r} \in \mathbb{R}^3. \end{cases}$$

where $\overline{*}$ denotes the adjoint temporal convolution

$$\big(\chi(\boldsymbol{\rho}, \cdot) \overline{*} \mathcal{E}^\dagger(\boldsymbol{r}, \cdot; \boldsymbol{r}', t')\big)(t) = \int_t^{t'} \chi(\boldsymbol{\rho}, s - t)\mathcal{E}^\dagger(\boldsymbol{r}, s; \boldsymbol{r}', t')\, ds.$$

Due to temporal invariance and translational invariance in the z-direction, we have

$$\mathcal{E}^\dagger(\boldsymbol{r}, t; \boldsymbol{r}', t') = \mathcal{E}^\dagger(\boldsymbol{\rho}, \boldsymbol{\rho}', z - z', t - t'),$$

and the solution is even in $z - z'$. The singular behavior of this solution is given by

$$\mathcal{E}^\dagger(\boldsymbol{r}, t; \boldsymbol{r}', t') = \frac{\delta\left(t - t' + |\boldsymbol{r} - \boldsymbol{r}'|/c\right)}{4\pi|\boldsymbol{r} - \boldsymbol{r}'|} + H\left(t - t' + |\boldsymbol{r} - \boldsymbol{r}'|/c\right)\Psi(\boldsymbol{r}, t; \boldsymbol{r}', t'),$$

where Ψ is a continuous function.

Reciprocity of the problem implies that

$$\mathcal{E}^\dagger(\boldsymbol{r}_1, t_1; \boldsymbol{r}_2, t_2) = \mathcal{E}(\boldsymbol{r}_2, t_2; \boldsymbol{r}_1, t_1). \tag{4.2}$$

This relation is found by integrating the following identity wrt $t \in (-\infty, \infty)$ and $\boldsymbol{r} \in \mathbb{R}^3$:

$$\begin{aligned} &\nabla\cdot\big(\mathcal{E}(\boldsymbol{r}, t; \boldsymbol{r}_1, t_1)\nabla\mathcal{E}^\dagger(\boldsymbol{r}, t; \boldsymbol{r}_2, t_2) - \nabla\mathcal{E}(\boldsymbol{r}, t; \boldsymbol{r}_1, t_1)\mathcal{E}^\dagger(\boldsymbol{r}, t; \boldsymbol{r}_2, t_2)\big) \\ &= \mathcal{E}(\boldsymbol{r}, t; \boldsymbol{r}_1, t_1)\frac{1}{c^2}\frac{\partial^2}{\partial t^2}\Big\{\mathcal{E}^\dagger(\boldsymbol{r}, t; \boldsymbol{r}_2, t_2) + \big(\chi(\boldsymbol{\rho}, \cdot) \overline{*} \mathcal{E}^\dagger(\boldsymbol{r}, \cdot; \boldsymbol{r}_2, t_2)\big)(t)\Big\} \\ &\quad - \frac{1}{c^2}\frac{\partial^2}{\partial t^2}\Big\{\mathcal{E}(\boldsymbol{r}, t; \boldsymbol{r}_1, t_1) + \left(\chi(\boldsymbol{\rho}, \cdot) * \mathcal{E}(\boldsymbol{r}, \cdot; \boldsymbol{r}_1, t_1)\right)(t)\Big\}\mathcal{E}^\dagger(\boldsymbol{r}, t; \boldsymbol{r}_2, t_2) \\ &\quad + \delta(\boldsymbol{r} - \boldsymbol{r}_1)\delta(t - t_1)\mathcal{E}^\dagger(\boldsymbol{r}, t; \boldsymbol{r}_2, t_2) - \delta(\boldsymbol{r} - \boldsymbol{r}_2)\delta(t - t_2)\mathcal{E}(\boldsymbol{r}, t; \boldsymbol{r}_1, t_1). \end{aligned}$$

From the fundamental solutions, $\mathcal{E}^\dagger$ and $\mathcal{E}$, we construct two solutions, $\widetilde{\mathcal{E}}^\dagger$ and $\widetilde{\mathcal{E}}$, that satisfy a homogeneous boundary condition on the plane $z = 0$ and $z' = 0$, respectively.

$$\begin{cases} \widetilde{\mathcal{E}}^\dagger(\boldsymbol{r}, t; \boldsymbol{r}', t')\Big|_{z=0} = 0, \\ \widetilde{\mathcal{E}}(\boldsymbol{r}, t; \boldsymbol{r}', t')\Big|_{z'=0} = 0. \end{cases}$$

This solution is easily found by the mirror image in the plane $z' = 0$.

$$\begin{cases} \widetilde{\mathcal{E}}^\dagger(\boldsymbol{r}, t; \boldsymbol{r}', t') = \mathcal{E}^\dagger(\boldsymbol{r}, t; \boldsymbol{r}', t') - \mathcal{E}^\dagger(\boldsymbol{r}, t; \boldsymbol{r}' - 2z'\hat{z}, t'), \\ \widetilde{\mathcal{E}}(\boldsymbol{r}, t; \boldsymbol{r}', t') = \widetilde{\mathcal{E}}^\dagger(\boldsymbol{r}', t'; \boldsymbol{r}, t). \end{cases} \tag{4.3}$$

The solution $\widetilde{\mathcal{E}}(\boldsymbol{r}, t; \boldsymbol{r}', t')$ has the form (see Appendix A)

$$\begin{aligned} \widetilde{\mathcal{E}}(\boldsymbol{r}, t; \boldsymbol{r}', t') =& \frac{\delta\left(t - t' - |\boldsymbol{r} - \boldsymbol{r}'|/c\right)}{4\pi|\boldsymbol{r} - \boldsymbol{r}'|} - \frac{\delta\left(t - t' - |\boldsymbol{r} - 2z\hat{z} - \boldsymbol{r}'|/c\right)}{4\pi|\boldsymbol{r} - 2z\hat{z} - \boldsymbol{r}'|} \\ &+ H\left(t - t' - |\boldsymbol{r} - \boldsymbol{r}'|/c\right) \Psi_1(\boldsymbol{r}, t; \boldsymbol{r}', t') \\ &+ H\left(t - t' - |\boldsymbol{r} - 2z\hat{z} - \boldsymbol{r}'|/c\right) \Psi_2(\boldsymbol{r}, t; \boldsymbol{r}', t'), \end{aligned}$$

where Ψ_1 and Ψ_2 are continuous functions.

As a starting point to find the integral representation, we use the Green's identity for vector fields [2].

$$\begin{aligned} &\int_0^\infty \iint\limits_{S_0} \Big\{ \psi\left(\hat{n} \times (\nabla \times \boldsymbol{F})\right) + (\nabla\psi)(\hat{n} \cdot \boldsymbol{F}) - \hat{n}\psi(\nabla \cdot \boldsymbol{F}) - (\nabla\psi) \times (\hat{n} \times \boldsymbol{F}) \Big\}\, dS\, dt \\ &= \int_0^\infty \iiint\limits_{V_0} \Big\{ \boldsymbol{F}\nabla^2\psi + \psi\left(\nabla \times (\nabla \times \boldsymbol{F}) - \nabla(\nabla \cdot \boldsymbol{F})\right) \Big\}\, d\boldsymbol{r}\, dt. \end{aligned} \tag{4.4}$$

Here V_0 is a finite volume with boundary S_0, and $d\boldsymbol{r}$ is the volume element.

Let $\boldsymbol{F} = \boldsymbol{E}$ and $\psi = \widetilde{\mathcal{E}}^\dagger$. The integrand of the right hand side of (4.4) for $z, z' > 0$ then is

$$\begin{aligned} &\boldsymbol{E}(\boldsymbol{r}, t)\nabla^2\widetilde{\mathcal{E}}^\dagger(\boldsymbol{r}, t; \boldsymbol{r}', t') + \widetilde{\mathcal{E}}^\dagger(\boldsymbol{r}, t; \boldsymbol{r}', t')\left(\nabla \times (\nabla \times \boldsymbol{E}(\boldsymbol{r}, t)) - \nabla(\nabla \cdot \boldsymbol{E}(\boldsymbol{r}, t))\right) \\ &\quad = \frac{1}{c^2}\frac{\partial}{\partial t}\left(\boldsymbol{E}(\boldsymbol{r}, t)\frac{\partial}{\partial t}\widetilde{\mathcal{E}}^\dagger(\boldsymbol{r}, t; \boldsymbol{r}', t') - \widetilde{\mathcal{E}}^\dagger(\boldsymbol{r}, t; \boldsymbol{r}', t')\frac{\partial}{\partial t}\boldsymbol{E}(\boldsymbol{r}, t)\right) \\ &\qquad - \delta(\boldsymbol{r} - \boldsymbol{r}')\delta(t - t')\boldsymbol{E}(\boldsymbol{r}, t) + \frac{1}{c^2}\Big\{\boldsymbol{E}(\boldsymbol{r}, t)\frac{\partial^2}{\partial t^2}\left(\chi(\cdot)\overline{*}\widetilde{\mathcal{E}}^\dagger(\boldsymbol{r}, \cdot; \boldsymbol{r}', t')\right)(t) \\ &\qquad - \widetilde{\mathcal{E}}^\dagger(\boldsymbol{r}, t; \boldsymbol{r}', t')\frac{\partial^2}{\partial t^2}\left(\chi(\cdot) * \boldsymbol{E}(\boldsymbol{r}, \cdot)\right)(t)\Big\}. \end{aligned}$$

Integrate this expression wrt time t from 0 to ∞. The first and the third terms on the right hand side then vanish due to the initial conditions posed on $\boldsymbol{E}$ and $\widetilde{\mathcal{E}}^\dagger$ and properties of the time convolution. Finally, integrate the space variables $\boldsymbol{r}$ over V_0, and the Green's identity (4.4) becomes ($t > 0$)

$$\begin{aligned} &-\int_0^\infty \iint\limits_{S_0} \Big\{ \widetilde{\mathcal{E}}^\dagger(\boldsymbol{r}, t; \boldsymbol{r}', t')\left(\hat{n} \times (\nabla \times \boldsymbol{E}(\boldsymbol{r}, t))\right) + (\nabla\widetilde{\mathcal{E}}^\dagger(\boldsymbol{r}, t; \boldsymbol{r}', t'))(\hat{n} \cdot \boldsymbol{E}(\boldsymbol{r}, t)) \\ &\quad - (\nabla\widetilde{\mathcal{E}}^\dagger(\boldsymbol{r}, t; \boldsymbol{r}', t')) \times (\hat{n} \times \boldsymbol{E}(\boldsymbol{r}, t)) \Big\}\, dS\, dt = \begin{cases} \boldsymbol{E}(\boldsymbol{r}', t'), & \boldsymbol{r}' \in V_0 \\ \boldsymbol{0}, & \boldsymbol{r}' \in \mathbb{R}^3 \backslash \overline{V}_0. \end{cases} \end{aligned}$$

or by the use of the Maxwell equations and changing the unprimed and the primed space and time coordinates ($t > 0$)

$$\int_0^\infty \iint_{S_0} \Big\{ \widetilde{\mathcal{E}}(\boldsymbol{r},t;\boldsymbol{r}',t') \left(\hat{n}' \times \frac{\partial}{\partial t'} \mu \boldsymbol{H}(\boldsymbol{r}',t') \right) - (\nabla' \widetilde{\mathcal{E}}(\boldsymbol{r},t;\boldsymbol{r}',t'))(\hat{n}' \cdot \boldsymbol{E}(\boldsymbol{r}',t'))$$
$$+ (\nabla' \widetilde{\mathcal{E}}(\boldsymbol{r},t;\boldsymbol{r}',t')) \times (\hat{n}' \times \boldsymbol{E}(\boldsymbol{r}',t')) \Big\} \, dS' \, dt' = \begin{cases} \boldsymbol{E}(\boldsymbol{r},t), & \boldsymbol{r} \in V_0 \\ \boldsymbol{0}, & \boldsymbol{r} \in \mathbb{R}^3 \backslash \overline{V}_0. \end{cases}$$

The unit vector $\hat{n}'$ denotes the normal vector of the surface S as a function of the primed variables $\boldsymbol{r}'$. Here, we have used the reciprocity relation (4.2) and the notation in (4.3).

Let V_0 be the domain $\mathcal{D}^\pm$, respectively. Due to compact support of excitation at $z = 0$ and causality, all fields vanish outside a sufficiently large ball for each finite time t. Adding the two contributions together and taking the transverse part of the result, gives for an $\boldsymbol{r}$ in the upper half plane $\mathcal{D}$

$$\begin{aligned} \boldsymbol{E}_T(\boldsymbol{r},t) = & \int_0^\infty \iint_{\mathbb{R}^2} \frac{\partial}{\partial z'} \widetilde{\mathcal{E}}(\boldsymbol{r},t;\boldsymbol{r}',t') \Big|_{z'=0} \boldsymbol{f}_T(\boldsymbol{\rho}',t) \, dx' dy' \, dt' \\ & + \int_0^\infty \iint_S (\nabla'_T \widetilde{\mathcal{E}}(\boldsymbol{r},t;\boldsymbol{r}',t')) \, [\hat{n}' \cdot \boldsymbol{E}_T(\boldsymbol{r}',t')] \, dS' \, dt' \quad \boldsymbol{r} \in \mathcal{D}, \ t > 0, \end{aligned} \tag{4.5}$$

where $\boldsymbol{f}_T(\boldsymbol{\rho},t) = \boldsymbol{E}_T(\boldsymbol{r},t)|_{z=0}$ and the possible jump discontinuity in the normal component of the electric field across S is denoted

$$[\hat{n} \cdot \boldsymbol{E}_T(\boldsymbol{r},t)] = \hat{n} \cdot \boldsymbol{E}_T(\boldsymbol{r},t)|_{\boldsymbol{r} \to S+0} - \hat{n} \cdot \boldsymbol{E}_T(\boldsymbol{r},t)|_{\boldsymbol{r} \to S-0} \, .$$

The limits $S \pm 0$ are taken with respect to the normal $\hat{n}$ of the surface S pointing into the domain $\mathcal{D}^+$.

The two integrals on the right hand side of the expression (4.5) can be written as, see Appendix B

$$\begin{aligned} \boldsymbol{E}_T(\boldsymbol{r},t) = & \int_0^\infty \iint_{\mathbb{R}^2} W(\boldsymbol{r},t;\boldsymbol{\rho}',t') \boldsymbol{f}_T(\boldsymbol{\rho}',t') \, d\boldsymbol{\rho}' \, dt' \\ & + \int_0^\infty \iint_{\mathbb{R}^2} \mathbf{T}(\boldsymbol{r},t;\boldsymbol{\rho}',t') \cdot \boldsymbol{f}_T(\boldsymbol{\rho}',t') \, d\boldsymbol{\rho}' \, dt', \end{aligned} \tag{4.6}$$

where the singular kernel $W(\boldsymbol{r},t;\boldsymbol{\rho}',t')$ is

$$W(\boldsymbol{r},t;\boldsymbol{\rho}',t') = -\frac{\partial}{\partial z} \frac{\delta(t - t' - |\boldsymbol{r} - \boldsymbol{\rho}'|/c)}{2\pi |\boldsymbol{r} - \boldsymbol{\rho}'|}.$$

The dyadic-valued function $\mathbf{T}(\boldsymbol{r},t;\boldsymbol{\rho}',t')$ is conjectured to be less singular than $W(\boldsymbol{r},t;\boldsymbol{\rho}',t')$. The explicit form of this function is given in Appendix B. Equation (4.6) relates the total transverse field $\boldsymbol{E}_T(\boldsymbol{r},t)$ to the corresponding field on the plane $z = 0$. This equation is the main result of this section.

5 Wave splitting—component decomposition

In this section we introduce the wave splitting concept of the fields. This paper employs the scalar splitting [5].

For each component of the electric field, define the up-going and down-going conditions as, cf. (1.2) and (1.3)

$$\boldsymbol{E}_T(\boldsymbol{r},t) = \mp\mathcal{K}\partial_z\boldsymbol{E}_T(\boldsymbol{r},t). \tag{5.1}$$

where the operator $\mathcal{K}$ is defined as

$$\mathcal{K}\boldsymbol{E}_T(\boldsymbol{r},t) = \int_0^\infty \iint_{\mathbb{R}^2} K(\boldsymbol{\rho},t;\boldsymbol{\rho}',t')\boldsymbol{E}_T(\boldsymbol{\rho}',z,t')\,d\boldsymbol{\rho}'\,dt',$$

where the kernel $K(\boldsymbol{\rho},t;\boldsymbol{\rho}',t')$ is

$$K(\boldsymbol{\rho},t;\boldsymbol{\rho}',t') = \frac{\delta(t-t'-|\boldsymbol{\rho}-\boldsymbol{\rho}'|/c)}{2\pi|\boldsymbol{\rho}-\boldsymbol{\rho}'|}.$$

We notice that the kernel $W(\boldsymbol{r},t;\boldsymbol{\rho}',t')$ satisfies the up-going condition (1.2) or (5.1), because the field point $\boldsymbol{r}$ ($z>0$) lies over the source point $\boldsymbol{\rho}'$ ($z'=0$). So we have

$$W(\boldsymbol{r},t;\boldsymbol{\rho}',t') = -\mathcal{K}\partial_z W(\boldsymbol{r},t;\boldsymbol{\rho}',t'), \qquad z>0. \tag{5.2}$$

The up-going and down-going conditions for the Maxwell equations are introduced in Ref. 9. These are

$$\begin{cases} \boldsymbol{H}_T = \mp\dfrac{1}{\mu}\mathbf{M}\boldsymbol{E}_T, \\ \boldsymbol{E}_T = \pm\dfrac{1}{\epsilon}\mathbf{N}\boldsymbol{H}_T, \end{cases} \tag{5.3}$$

respectively. In the special case treated in this paper, the operators $\mathbf{N}$ and $\mathbf{M}$ are identical and explicitly given by [9]

$$\mathbf{N}\boldsymbol{E}_T(\boldsymbol{\rho},t) = \mathbf{M}\boldsymbol{E}_T(\boldsymbol{\rho},t) = \partial_t^{-1}\mathcal{K}\begin{pmatrix} \partial_x\partial_y & \left(\frac{1}{c^2}\partial_t^2-\partial_x^2\right) \\ \left(\partial_y^2-\frac{1}{c^2}\partial_t^2\right) & -\partial_x\partial_y \end{pmatrix}\begin{pmatrix} E_x \\ E_y \end{pmatrix},$$

The definition of up- and down-going waves, (5.1), is consistent with the corresponding definition for the vector case (5.3). From the definition of the $\mathbf{M}$-operator, the definition of up- and down-going waves, (5.1), and (1.4), we get for the up- and down-going waves

$$\begin{aligned}
-\frac{1}{\mu}\mathbf{M}\boldsymbol{E}_T &= -\frac{1}{\mu}\partial_t^{-1}\mathcal{K}\begin{pmatrix} \partial_x\partial_y & \frac{1}{c^2}\partial_t^2-\partial_x^2 \\ -\left(\frac{1}{c^2}\partial_t^2-\partial_y^2\right) & -\partial_x\partial_y \end{pmatrix}\begin{pmatrix} E_x \\ E_y \end{pmatrix} \\
&= \pm\frac{1}{\mu}\partial_t^{-1}\mathcal{K}^2\partial_z\begin{pmatrix} \partial_x\partial_y & \partial_y^2 \\ -\partial_x^2 & -\partial_x\partial_y \end{pmatrix}\begin{pmatrix} E_x \\ E_y \end{pmatrix} \pm\frac{1}{\mu}\partial_t^{-1}\partial_z\begin{pmatrix} 0 & 1 \\ -1 & 0 \end{pmatrix}\begin{pmatrix} E_x \\ E_y \end{pmatrix} \\
&= \mp\frac{1}{\mu}\partial_t^{-1}\left[\hat{z}\times\nabla_T(\mathcal{K}^2\partial_z\nabla_T\cdot\boldsymbol{E}_T)+\hat{z}\times\partial_z\boldsymbol{E}_T\right] \\
&= \pm\frac{1}{\mu}\partial_t^{-1}\left[\hat{z}\times\nabla_T(\mathcal{K}^2\partial_z^2E_z)-\hat{z}\times\partial_z\boldsymbol{E}_T\right] \\
&= \pm\frac{1}{\mu}\partial_t^{-1}\left[\hat{z}\times\nabla_T E_z-\hat{z}\times\partial_z\boldsymbol{E}_T\right] = \pm\boldsymbol{H}_T.
\end{aligned}$$

In this derivation we have explicitly used that $\nabla \cdot \boldsymbol{E} = 0$, (1.4), (3.2), and the fact that the E_z-field satisfies

$$\left(\nabla^2 - \frac{1}{c^2}\frac{\partial^2}{\partial t^2}\right) E_z(\boldsymbol{r}, t) = 0,$$

in the absence of any scatterer ($\chi = 0$).

Since we have this consistency between the scalar and the vector formulations in this case, we prefer to use the simpler scalar wave splitting, instead of the vector one, in this paper.

At each value of z, decompose the transverse electric field $\boldsymbol{E}_T$ in two new components $\boldsymbol{F}_T^{\pm}$ defined by

$$\boldsymbol{F}_T^{\pm}(\boldsymbol{r}, t) = \frac{1}{2}\left\{\boldsymbol{E}_T(\boldsymbol{r}, t) \mp \mathcal{K}\partial_z \boldsymbol{E}_T(\boldsymbol{r}, t)\right\}. \tag{5.4}$$

From the wave equation, (3.3), the split fields $\boldsymbol{F}_T^{\pm}$ satisfy

$$\frac{\partial}{\partial z}\begin{pmatrix}\boldsymbol{F}_T^+\\ \boldsymbol{F}_T^-\end{pmatrix} = \mathcal{K}^{-1}\begin{pmatrix}-\mathbf{I} & 0\\ 0 & \mathbf{I}\end{pmatrix}\cdot\begin{pmatrix}\boldsymbol{F}_T^+\\ \boldsymbol{F}_T^-\end{pmatrix} + \frac{1}{2}\mathcal{K}\chi(\boldsymbol{\rho}, \cdot) * \frac{\partial^2}{\partial t^2}\begin{pmatrix}-\mathbf{I} & -\mathbf{I}\\ \mathbf{I} & \mathbf{I}\end{pmatrix}\cdot\begin{pmatrix}\boldsymbol{F}_T^+\\ \boldsymbol{F}_T^-\end{pmatrix}. \tag{5.5}$$

6 Propagator

In this section the wave splitting, (5.4), is used to define the propagator operators of the problem.

We first apply the splitting to the transverse field on the plane $z = 0$. The total transverse field $\boldsymbol{E}_T$ is

$$\boldsymbol{E}_T(\boldsymbol{\rho}, 0, t) = \boldsymbol{F}_T^-(\boldsymbol{\rho}, 0, t) + \boldsymbol{F}_T^+(\boldsymbol{\rho}, 0, t).$$

On this plane the up- and down-going waves are related by a reflection operator $\mathcal{R}$.

$$\boldsymbol{F}_T^-(\boldsymbol{\rho}, 0, t) = \mathcal{R}\boldsymbol{F}_T^+(\boldsymbol{\rho}, 0, t).$$

The integral kernel of the reflection operator is denoted $\mathbf{R}$.

$$\boldsymbol{F}_T^-(\boldsymbol{\rho}, 0, t) = \int_0^\infty \iint_{\mathbb{R}^2} \mathbf{R}(\boldsymbol{\rho}, t; \boldsymbol{\rho}', t') \cdot \boldsymbol{F}_T^+(\boldsymbol{\rho}', 0, t')\, d\boldsymbol{\rho}'\, dt'.$$

We now apply the splitting defined in (5.4) to (4.6). From (4.6) we find ($z \geq 0$)

$$\begin{cases} \boldsymbol{F}_T^+(\boldsymbol{r}, t) = \displaystyle\int_0^\infty \iint_{\mathbb{R}^2} W(\boldsymbol{r}, t; \boldsymbol{\rho}', t') \cdot \boldsymbol{F}_T^+(\boldsymbol{\rho}', 0, t')\, d\boldsymbol{\rho}'\, dt' \\ \qquad\qquad + \displaystyle\int_0^\infty \iint_{\mathbb{R}^2} \mathbf{P}^+(\boldsymbol{r}, t; \boldsymbol{\rho}', t') \cdot \boldsymbol{F}_T^+(\boldsymbol{\rho}', 0, t')\, d\boldsymbol{\rho}'\, dt', \\ \boldsymbol{F}_T^-(\boldsymbol{r}, t) = \displaystyle\int_0^\infty \iint_{\mathbb{R}^2} \mathbf{P}^-(\boldsymbol{r}, t; \boldsymbol{\rho}', t') \cdot \boldsymbol{F}_T^+(\boldsymbol{\rho}', 0, t')\, d\boldsymbol{\rho}'\, dt', \end{cases} \tag{6.1}$$

where we used (5.2) and were $\mathbf{P}^+(\boldsymbol{r},t;\boldsymbol{\rho}',t')$ and $\mathbf{P}^-(\boldsymbol{r},t;\boldsymbol{\rho}',t')$ are defined as

$$\begin{cases} \mathbf{P}^+(\boldsymbol{r},t;\boldsymbol{\rho}',t') = \mathbf{T}^+(\boldsymbol{r},t;\boldsymbol{\rho}',t') \\ \qquad\qquad + \displaystyle\int_0^\infty \iint_{\mathbb{R}^2} W(\boldsymbol{r},t;\boldsymbol{\rho}'',t'')\cdot\mathbf{R}(\boldsymbol{\rho}'',t'';\boldsymbol{\rho}',t')\,d\boldsymbol{\rho}''\,dt'' \\ \qquad\qquad + \displaystyle\int_0^\infty \iint_{\mathbb{R}^2} \mathbf{T}^+(\boldsymbol{r},t;\boldsymbol{\rho}'',t'')\cdot\mathbf{R}(\boldsymbol{\rho}'',t'';\boldsymbol{\rho}',t')\,d\boldsymbol{\rho}''\,dt'', \\ \mathbf{P}^-(\boldsymbol{r},t;\boldsymbol{\rho}',t') = \mathbf{T}^-(\boldsymbol{r},t;\boldsymbol{\rho}',t') \\ \qquad\qquad + \displaystyle\int_0^\infty \iint_{\mathbb{R}^2} \mathbf{T}^-(\boldsymbol{r},t;\boldsymbol{\rho}'',t'')\cdot\mathbf{R}(\boldsymbol{\rho}'',t'';\boldsymbol{\rho}',t')\,d\boldsymbol{\rho}''\,dt''. \end{cases}$$

where

$$\mathbf{T}^\pm(\boldsymbol{r},t;\boldsymbol{\rho}',t') = \frac{1}{2}\left\{\mathcal{I}\mp\mathcal{K}\partial_z\right\}\mathbf{T}(\boldsymbol{r},t;\boldsymbol{\rho}',t').$$

and $\mathcal{I}$ is the identity operator.

The early time behavior of the kernel $\mathbf{P}^+(\boldsymbol{r},t;\boldsymbol{\rho}',t')$ controls the field near the wave front, and therefore determines the precursor or the forerunner of the wave propagation [1]. The relevant early time behavior of this kernel will be reported elsewhere.

Let $z\to 0^+$ in (6.1). The result is

$$\boldsymbol{F}_T^-(\boldsymbol{\rho},0,t) = \int_0^\infty \iint_{\mathbb{R}^2} \mathbf{P}^-(\boldsymbol{\rho},0,t;\boldsymbol{\rho}',t')\cdot\boldsymbol{F}_T^+(\boldsymbol{\rho}',0,t')\,d\boldsymbol{\rho}'\,dt',$$

which is another representation of the reflection operator $\mathcal{R}$, i.e.,

$$\begin{aligned}\mathbf{R}(\boldsymbol{\rho},t;\boldsymbol{\rho}',t') &= \mathbf{T}^-(\boldsymbol{\rho},t;\boldsymbol{\rho}',t') \\ &\quad + \int_0^\infty \iint_{\mathbb{R}^2} \mathbf{T}^-(\boldsymbol{\rho},0,t;\boldsymbol{\rho}'',t'')\cdot\mathbf{R}(\boldsymbol{\rho}'',t'';\boldsymbol{\rho}',t')\,d\boldsymbol{\rho}''\,dt''.\end{aligned}$$

which implies that the reflection kernel $\mathbf{R}(\boldsymbol{\rho},t;\boldsymbol{\rho}',t')$ is as smooth as $\mathbf{T}^-$.

7 Propagator equations

With the use of (6.1) and (5.5) it is straightforward to prove that the propagator equations are:

$$\begin{cases} \dfrac{\partial}{\partial z}\mathbf{P}^+(\boldsymbol{r},t;\boldsymbol{\rho}',t') + \mathcal{K}^{-1}\mathbf{P}^+(\boldsymbol{r},t;\boldsymbol{\rho}',t') \\ \qquad\qquad = -\dfrac{1}{2}\mathcal{K}\chi(\boldsymbol{\rho},\cdot)*\dfrac{\partial^2}{\partial t^2}\left(\mathbf{P}^+(\boldsymbol{r},t;\boldsymbol{\rho}',t')+\mathbf{P}^-(\boldsymbol{r},t;\boldsymbol{\rho}',t')\right) - \mathbf{A}(\boldsymbol{r},t;\boldsymbol{\rho}',t'), \\ \dfrac{\partial}{\partial z}\mathbf{P}^-(\boldsymbol{r},t;\boldsymbol{\rho}',t') - \mathcal{K}^{-1}\mathbf{P}^-(\boldsymbol{r},t;\boldsymbol{\rho}',t') \\ \qquad\qquad = \dfrac{1}{2}\mathcal{K}\chi(\boldsymbol{\rho},\cdot)*\dfrac{\partial^2}{\partial t^2}\left(\mathbf{P}^+(\boldsymbol{r},t;\boldsymbol{\rho}',t')+\mathbf{P}^-(\boldsymbol{r},t;\boldsymbol{\rho}',t')\right) + \mathbf{A}(\boldsymbol{r},t;\boldsymbol{\rho}',t'), \end{cases}$$

where the source term $\mathbf{A}(\boldsymbol{r}, t; \boldsymbol{\rho}', t')$ is

$$\mathbf{A}(\boldsymbol{r}, t; \boldsymbol{\rho}', t') = \frac{1}{2}\mathcal{K}\chi(\boldsymbol{\rho}, \cdot) * \frac{\partial^2}{\partial t^2} W(\boldsymbol{r}, t; \boldsymbol{\rho}', t').$$

The inverse of the splitting operator $\mathcal{K}$ has the following integral representation [5]:

$$\mathcal{K}^{-1} = \frac{1}{c}\frac{\partial}{\partial t} + \mathcal{L},$$

where

$$\begin{aligned}\mathcal{L}f(\boldsymbol{r}, t) = \frac{c}{2\pi}\int_0^t \int_0^{2\pi} \Big(& \frac{\partial^2 f}{\partial x^2}(\boldsymbol{\rho} + c(t-t')\hat{\rho}, z, t') \sin^2\phi \\ & - \frac{\partial^2 f}{\partial x \partial y}(\boldsymbol{\rho} + c(t-t')\hat{\rho}, z, t') \sin 2\phi \\ & + \frac{\partial^2 f}{\partial y^2}(\boldsymbol{\rho} + c(t-t')\hat{\rho}, z, t') \cos^2\phi \Big)\, d\phi\, dt',\end{aligned}$$

and $\hat{\rho} = \hat{x}\cos\phi + \hat{y}\sin\phi$.

8 Conclusions

In this paper an electromagnetic wave propagation problem is studied. The medium is supposed to exhibit laterally discontinuous dispersive properties. The appropriate mixed, initial boundary value problem is studied, and the form of the mapping, that maps a transverse electric field in the plane $z = 0$ into the transverse electric field on another plane, is explicitly given. The scalar wave propagation of the transverse electric field is introduced, and the appropriate propagator operators are investigated. The kernels of these operators satisfy a set of coupled linear PDEs.

Appendix A Existence and continuity of the fundamental solution

A.1 Iterative solution of an initial-value problem

In this appendix we show that the solution of the initial-value problem

$$\begin{cases} \nabla^2 u(\boldsymbol{r}, t) - \dfrac{1}{c^2}\dfrac{\partial^2}{\partial t^2}\left\{u(\boldsymbol{r}, t) + \left(\chi(\boldsymbol{r}, \cdot) * u(\boldsymbol{r}, \cdot)\right)(t)\right\} = g(\boldsymbol{r}, t), \boldsymbol{r} \in \mathbb{R}^3, t' < t < T \\ u(\boldsymbol{r}, t) = 0 \qquad\qquad \boldsymbol{r} \in \mathbb{R}^3, t \leq t', \end{cases} \tag{A.1}$$

can be obtained by an iteration procedure. Here t' and T are fixed parameters. Due to invariance under time translation there is no loss of generality to let $t' = 0$.

Here, as in Section 2, $\chi(\boldsymbol{r}, t)$ is a piecewise constant function of $\boldsymbol{r}$ with a finite number of surfaces of discontinuity. Furthermore, it is a C^2 function of t for $0 \leq$

$t \leq T$, and it is assumed that $\chi(\boldsymbol{r}, 0) = 0$. Thus, there exist constants m_1 and m_2 such that

$$\begin{cases} |\chi_t(\boldsymbol{r}, t)| < m_1, & \boldsymbol{r} \in \mathbb{R}^3, 0 \leq t \leq T, \\ |\chi_{tt}(\boldsymbol{r}, t)| < m_2, & \boldsymbol{r} \in \mathbb{R}^3, 0 \leq t \leq T. \end{cases} \tag{A.2}$$

The conditions on $g(\boldsymbol{r}, t)$ are given below in an implicit form.

System (A.1) is first written in the form

$$\left(\nabla^2 - \frac{1}{c^2}\frac{\partial^2}{\partial t^2}\right) u(\boldsymbol{r}, t) = \frac{1}{c^2}\left\{\chi_t(\boldsymbol{r}, 0^+)u(\boldsymbol{r}, t) + \int_0^t \chi_{tt}(\boldsymbol{r}, t-s)u(\boldsymbol{r}, s)ds\right\} + g(\boldsymbol{r}, t) \tag{A.3}$$

Using the fundamental solution $\delta(t - s - |\boldsymbol{r} - \boldsymbol{r}'|/c)/4\pi|\boldsymbol{r} - \boldsymbol{r}'|$ for the wave equation, treating the right-hand side as a source term and using the causality condition on $u(\boldsymbol{r}, t)$, equation (A.3) is converted into the following integral equation:

$$u(\boldsymbol{r}, t) = -\mathcal{A}u(\boldsymbol{r}, t) + G(\boldsymbol{r}, t), \quad t > 0, \tag{A.4}$$

where

$$G(\boldsymbol{r}, t) = -\iiint\limits_{\mathbb{R}^3} \frac{g(\boldsymbol{r}', t - |\boldsymbol{r} - \boldsymbol{r}'|/c)}{4\pi|\boldsymbol{r} - \boldsymbol{r}'|} d\boldsymbol{r}', \tag{A.5}$$

and

$$\begin{aligned} \mathcal{A}u(\boldsymbol{r}, t) = \iiint\limits_{\mathbb{R}^3} \frac{H\left(t - |\boldsymbol{r} - \boldsymbol{r}'|/c\right)}{4\pi|\boldsymbol{r} - \boldsymbol{r}'|c^2} \Bigg\{ & \chi_t(\boldsymbol{r}', 0^+) u\left(\boldsymbol{r}', t - |\boldsymbol{r} - \boldsymbol{r}'|/c\right) \\ & + \int_0^{t - |\boldsymbol{r} - \boldsymbol{r}'|/c} \chi_{tt}\left(\boldsymbol{r}', t - s - |\boldsymbol{r} - \boldsymbol{r}'|/c\right) u(\boldsymbol{r}', s)\, ds \Bigg\} d\boldsymbol{r}'. \end{aligned} \tag{A.6}$$

The function $G(\boldsymbol{r}, t)$ is supposed to be bounded in $\boldsymbol{r}$, continuous in the variable t for $0 \leq t \leq T$, with $G(\boldsymbol{r}, 0) = 0$. The following norms are introduced:

$$\begin{cases} \|G\| = \max\limits_{\boldsymbol{r} \in \mathbb{R}^3,\, 0 \leq t \leq T} |G(\boldsymbol{r}, t)| \\ \|u\| = \max\limits_{\boldsymbol{r} \in \mathbb{R}^3,\, 0 \leq t \leq T} |u(\boldsymbol{r}, t)|. \end{cases}$$

It is shown that equation (A.4) can be solved by the following iteration scheme:

$$\begin{cases} u_0(\boldsymbol{r}, t) = G(\boldsymbol{r}, t), \\ u_n(\boldsymbol{r}, t) = G(\boldsymbol{r}, t) - \mathcal{A}u_{n-1}(\boldsymbol{r}, t), \qquad n = 1, 2, 3, \ldots. \end{cases} \tag{A.7}$$

A preliminary step is to show that

$$\max_{\boldsymbol{r} \in \mathbb{R}^3} |\mathcal{A}^n u(\boldsymbol{r}, t)| \leq \frac{(M_1 t^2)^n}{(2n)!}\|u\|, \qquad 0 \leq t \leq T, \qquad n = 1, 2, 3, \ldots, \tag{A.8}$$

where $M_1 = m_1 + Tm_2$. This inequality can be proved by induction, using the estimate $(n = 0, 1, 2, \ldots)$

$$|\mathcal{A}^{n+1}u(\boldsymbol{r},t)| \leq \iiint\limits_{\mathbb{R}^3} \frac{H\left(t - |\boldsymbol{r}-\boldsymbol{r}'|/c\right)}{4\pi|\boldsymbol{r}-\boldsymbol{r}'|c^2}$$
$$\times \left\{ m_1|\mathcal{A}^n u(\boldsymbol{r}', t - |\boldsymbol{r}-\boldsymbol{r}'|/c)| + m_2 \int_0^{t-|\boldsymbol{r}-\boldsymbol{r}'|/c} |\mathcal{A}^n u(\boldsymbol{r}', s)|\, ds \right\} d\boldsymbol{r}'.$$

The $n = 1$, and the general case of the induction can be done at the same time. We have $(n = 0, 1, 2, \ldots)$

$$\max_{\boldsymbol{r}\in\mathbb{R}^3} |\mathcal{A}^{n+1}u(\boldsymbol{r},t)| \leq \frac{M_1^n\|u\|}{c^2(2n)!} \max_{\boldsymbol{r}\in\mathbb{R}^3} \iiint\limits_{\mathbb{R}^3} \frac{H(t - |\boldsymbol{r}-\boldsymbol{r}'|/c)}{4\pi|\boldsymbol{r}-\boldsymbol{r}'|}$$
$$\times \left\{ m_1(t - |\boldsymbol{r}-\boldsymbol{r}'|/c)^{2n} + \frac{m_2}{2n+1}(t - |\boldsymbol{r}-\boldsymbol{r}'|/c)^{2n+1} \right\} d\boldsymbol{r}'$$
$$= \frac{M_1^n\|u\|}{(2n)!} \int_0^t \left\{ m_1(t-\tau)^{2n} + \frac{m_2}{2n+1}(t-\tau)^{2n+1} \right\} \tau d\tau$$
$$= \frac{M_1^n\|u\|}{(2n+2)!} t^{2n+2} \left\{ m_1 + \frac{m_2 t}{(2n+3)} \right\} \leq \frac{M_1^{n+1}\|u\|}{(2n+2)!} t^{2n+2}.$$

Thus, it follows that the nth iterate of our procedure given by

$$u_n = G - \mathcal{A}G + \mathcal{A}^2G + \ldots + (-1)^n\mathcal{A}^nG,$$

has the property that for $\boldsymbol{r} \in \mathbb{R}^3$, $0 \leq t \leq T$

$$\|u_n\| \leq \|G\| \sum_{k=0}^{n} \frac{(M_1T^2)^k}{(2k)!},$$

and thus the sequence of partial sums $\{u_n\}$ converges uniformly.

With a small modification of the proof of a theorem in [4, Section 1.6] it can be shown that the operator

$$\iiint\limits_{\mathbb{R}^3} \frac{H\left(t - |\boldsymbol{r}-\boldsymbol{r}'|/c\right)}{|\boldsymbol{r}-\boldsymbol{r}'|} f\left(\boldsymbol{r}', t - |\boldsymbol{r}-\boldsymbol{r}'|/c\right) d\boldsymbol{r}', \qquad 0 \leq t \leq T, \tag{A.9}$$

maps function $f(\boldsymbol{r}, t)$, bounded in $\boldsymbol{r}$, continuous in t for $0 \leq t \leq T$, with $f(\boldsymbol{r}, 0) = 0$, into a continuous function of $\boldsymbol{r}$ and t. Thus, it follows that with the conditions on $G(\boldsymbol{r}, t)$, the iterates $\mathcal{A}^n u$ are continuous functions in $\boldsymbol{r}$ and t and the solution $u(\boldsymbol{r}, t)$ is a continuous function of $\boldsymbol{r}$ and t.

Stronger results can be given. Again modifying the proof for the potential functions in Ref. 4, it can be shown that if in addition the function $f(\boldsymbol{r}, t)$ in (A.9) is continuously differentiable in t for $0 \leq t \leq T$, and $\frac{\partial}{\partial t} f(\boldsymbol{r}, 0) = 0$, then the operator given by (A.9) is a C^1 function of $\boldsymbol{r}$ and t.

We can now examine the behavior of the derivatives ∂_x, ∂_y of the solution $u(\boldsymbol{r},t)$, in light of the fact that $\chi(\boldsymbol{r},t)$ is piecewise constant in $\boldsymbol{r}$, and the surface of discontinuity being cylinder parallel the z-axis. Let $\hat{n}$ be unit outward normal to the cylindrical surface of discontinuity S, then

$$\partial_x\chi(\boldsymbol{r},t) = \hat{n}\cdot\hat{x}\,[\chi]\,\delta_S,$$
$$\partial_y\chi(\boldsymbol{r},t) = \hat{n}\cdot\hat{y}\,[\chi]\,\delta_S,$$

where $\iiint\limits_{\mathbb{R}^3} \phi(\boldsymbol{r})\delta_S d\boldsymbol{r} = \iint\limits_S \phi(\boldsymbol{r})dS$. Differentiate equation (A.3) with respect to x, and obtain an equation for $\partial_x u$ similar to the equation (A.3), but with $g(\boldsymbol{r},t)$ replaced by $\partial_x g(\boldsymbol{r},t) + \delta_S h_x(\boldsymbol{r},t)$, where

$$h_x(\boldsymbol{r},t) = \frac{1}{c^2}\hat{n}\cdot\hat{x}\left\{[\chi_t]\,(\boldsymbol{r},0^+)u(\boldsymbol{r},t) + \int_0^t [\chi_{tt}]\,(\boldsymbol{r},t-s)u(\boldsymbol{r},s)ds\right\}.$$

Thus, we obtain an integral equation for $\partial_x u$ similar to the one for $u(\boldsymbol{r},t)$. Specifically, we have

$$\partial_x u(\boldsymbol{r},t) = -\mathcal{A}\partial_x u + G_x(\boldsymbol{r},t), \tag{A.10}$$

where

$$G_x(\boldsymbol{r},t) = -\iiint\limits_{\mathbb{R}^3} \frac{\partial_x g(\boldsymbol{r}',t-|\boldsymbol{r}-\boldsymbol{r}'|/c)}{4\pi|\boldsymbol{r}-\boldsymbol{r}'|}d\boldsymbol{r}' - \iint\limits_S \frac{h_x(\boldsymbol{r}',t-|\boldsymbol{r}-\boldsymbol{r}'|/c)}{4\pi|\boldsymbol{r}-\boldsymbol{r}'|}dS'.$$

Putting the appropriate conditions on $G_x(\boldsymbol{r},t)$ one can show that equation (A.10) can be solved by iteration (same as equation (A.3)). A similar result can be obtained for $\partial_y u$.

A.2 Application to the problem in question

In this subsection, we apply the general method described above to the problem (4.1). First, we identify the leading singular term of $\mathcal{E}(\boldsymbol{r},t;\boldsymbol{r}',t')$ as the fundamental solution of the wave equation. Let

$$\mathcal{E}(\boldsymbol{r},t;\boldsymbol{r}',t') = \mathcal{E}_0(\boldsymbol{r},t;\boldsymbol{r}',t') + \mathcal{E}_1(\boldsymbol{r},t;\boldsymbol{r}',t') \tag{A.11}$$

where $\mathcal{E}_0(\boldsymbol{r},t;\boldsymbol{r}',t') = \delta\left(t-t'-|\boldsymbol{r}-\boldsymbol{r}'|/c\right)/4\pi|\boldsymbol{r}-\boldsymbol{r}'|$. We insert (A.11) into equation (4.1) and convert the expression into an integral equation in the manner described above. Straightforward calculations (change of variables to prolate spheroidal coordinates with focal points in $\boldsymbol{r}$ and $\boldsymbol{r}'$) give an equation for $\mathcal{E}_1(\boldsymbol{r},t;\boldsymbol{r}',t')$ similar to (A.4) with

$$G(\boldsymbol{r},t;\boldsymbol{r}',t') = \Phi(\boldsymbol{r},t;\boldsymbol{r}',t') + H\left(t-t'-|\boldsymbol{r}-\boldsymbol{r}'|/c\right)\Psi(\boldsymbol{r},t;\boldsymbol{r}',t'),$$

where the functions Φ and Ψ are continuous and $\Phi(\boldsymbol{r},t;\boldsymbol{r}',t') = 0$, for $t-t'-|\boldsymbol{r}-\boldsymbol{r}'|/c \le 0$. These functions depend on χ and on the form of the surface of discontinuity S. Function G does not fulfill conditions listed in the previous subsection because it is not continuous when

$$t-t'-|\boldsymbol{r}-\boldsymbol{r}'|/c = 0.$$

This difficulty can be removed by introducing $\mathcal{E}_2 = \mathcal{E}_1 - G$. It is obvious that $\mathcal{E}_2(\boldsymbol{r}, t; \boldsymbol{r}', t')$ satisfies

$$u(\boldsymbol{r}, t) = -\mathcal{A}u(\boldsymbol{r}, t) - \mathcal{A}G(\boldsymbol{r}, t),$$

which is of the same type, and the source term $-\mathcal{A}G(\boldsymbol{r}, t)$ obviously satisfies all the conditions listed above.

Thus, we have shown that the solution to the problem (4.1) does exist and has the form

$$\mathcal{E}(\boldsymbol{r}, t; \boldsymbol{r}', t') = \frac{\delta\left(t - t' - |\boldsymbol{r} - \boldsymbol{r}'|/c\right)}{4\pi|\boldsymbol{r} - \boldsymbol{r}'|} + H\left(t - t' - |\boldsymbol{r} - \boldsymbol{r}'|/c\right)\Psi(\boldsymbol{r}, t; \boldsymbol{r}', t'), \quad \text{(A.12)}$$

where Ψ is a continuous function.

Appendix B Elimination of the jump $[\hat{n} \cdot \boldsymbol{E}_T]$

In this appendix we show that equation (4.5) can be written as

$$\begin{aligned}\boldsymbol{E}_T(\boldsymbol{r}, t) = &\int_0^\infty \iint_{\mathbb{R}^2} W(\boldsymbol{r}, t; \boldsymbol{\rho}', t')\boldsymbol{f}_T(\boldsymbol{\rho}', t')\, d\boldsymbol{\rho}'\, dt' \\ &+ \int_0^\infty \iint_{\mathbb{R}^2} \mathbf{T}(\boldsymbol{r}, t; \boldsymbol{\rho}', t') \cdot \boldsymbol{f}_T(\boldsymbol{\rho}', t')\, d\boldsymbol{\rho}'\, dt',\end{aligned}$$

where the singular kernel $W(\boldsymbol{r}, t; \boldsymbol{\rho}', t')$ is

$$W(\boldsymbol{r}, t; \boldsymbol{\rho}', t') = -\frac{\partial}{\partial z}\frac{\delta(t - t' - |\boldsymbol{r} - \boldsymbol{\rho}'|/c)}{2\pi|\boldsymbol{r} - \boldsymbol{\rho}'|},$$

and $\mathbf{T}(\boldsymbol{r}, t; \boldsymbol{\rho}', t')$ is a less singular function. It is enough to show that the last integral in (4.5) can be written as

$$\int_0^\infty \iint_{\mathbb{R}^2} \mathbf{S}(\boldsymbol{r}, t; \boldsymbol{\rho}', t') \cdot \boldsymbol{f}_T(\boldsymbol{\rho}', t')\, dx' dy'\, dt',$$

where $\mathbf{S}$ is a classical function. First, eliminate the jump discontinuity of the normal component of the electric field $[\hat{n} \cdot \boldsymbol{E}_T(\boldsymbol{r}, t)]$ in the expression (4.5). To do this, let $\boldsymbol{r} \to S$ from the negative side, and take the normal component on the surface S, see Appendix C.

$$\begin{aligned}2\hat{n} \cdot \boldsymbol{E}_T^-(\boldsymbol{r}, t) = &\, g(\boldsymbol{r}, t) - f(\boldsymbol{r}, t) \\ &+ \int_0^\infty \iint_S V(\boldsymbol{r}, t; \boldsymbol{r}', t') f(\boldsymbol{r}', t')\, dS'\, dt', \quad \boldsymbol{r} \in S, t > 0,\end{aligned} \quad \text{(B.1)}$$

where

$$\begin{cases} f(\boldsymbol{r}, t) = [\hat{n} \cdot \boldsymbol{E}_T(\boldsymbol{r}, t)], \\ g(\boldsymbol{r}, t) = 2\hat{n} \cdot \displaystyle\int_0^\infty \iint_{\mathbb{R}^2} \frac{\partial}{\partial z'}\, \widetilde{\mathcal{E}}(\boldsymbol{r}, t; \boldsymbol{r}', t')\Big|_{z'=0} \boldsymbol{f}_T(\boldsymbol{\rho}', t')\, d\boldsymbol{\rho}'\, dt', \\ V(\boldsymbol{r}, t; \boldsymbol{r}', t') = 2\hat{n} \cdot \nabla_T' \widetilde{\mathcal{E}}(\boldsymbol{r}, t; \boldsymbol{r}', t'). \end{cases} \quad \text{(B.2)}$$

The surface integral in (B.1) is interpreted as the Cauchy principal value.

Furthermore, due to continuity of $\hat{n}\cdot\boldsymbol{D}$ across S, we also have that

$$f(\boldsymbol{r},t)+\left(\chi^+(\cdot)*f(\boldsymbol{r},\cdot)\right)(t)+\left([\chi](\cdot)*\hat{n}\cdot\boldsymbol{E}_T^-(\boldsymbol{r},\cdot)\right)(t)=0,\quad \boldsymbol{r}\in S,t>0,$$

where

$$[\chi](t)=\chi^+(t)-\chi^-(t).$$

Eliminate the field $\hat{n}\cdot\boldsymbol{E}_T^-(\boldsymbol{r},t)$ by using (B.1). We get ($\boldsymbol{r}\in S,t>0$)

$$\begin{aligned}&2f(\boldsymbol{r},t)+2\left(\chi^+(\cdot)*f(\boldsymbol{r},\cdot)\right)(t)\\&\quad+\left\{[\chi](\cdot)*\left(g(\boldsymbol{r},\cdot)-f(\boldsymbol{r},\cdot)+\int_0^\infty\iint_S V(\boldsymbol{r},\cdot,\boldsymbol{r}',t')f(\boldsymbol{r}',t')\,dS'\,dt'\right)\right\}(t)=0,\end{aligned}$$

or

$$\begin{aligned}&f(\boldsymbol{r},t)+\frac{1}{2}\left([\chi^+(\cdot)+\chi^-(\cdot)]*f(\boldsymbol{r},\cdot)\right)(t)+G(\boldsymbol{r},t)\\&\quad+\int_0^\infty\iint_S M(\boldsymbol{r},t,\boldsymbol{r}',t')f(\boldsymbol{r}',t')\,dS'\,dt'=0,\quad \boldsymbol{r}\in S,t>0,\end{aligned}\tag{B.3}$$

where

$$\begin{cases}G(\boldsymbol{r},t)=\dfrac{1}{2}\left([\chi](\cdot)*g(\boldsymbol{r},\cdot)\right)(t),\\ M(\boldsymbol{r},t;\boldsymbol{r}',t')=\dfrac{1}{2}\left([\chi](\cdot)*V(\boldsymbol{r},\cdot,\boldsymbol{r}',t')\right)(t).\end{cases}$$

Let $L(t)$ be the resolvent of $1/2(\chi^+(t)+\chi^-(t))$, i.e.,

$$\frac{1}{2}\left(\chi^+(t)+\chi^-(t)\right)+L(t)+\frac{1}{2}\left((\chi^+(\cdot)+\chi^-(\cdot))*L(\cdot)\right)(t)=0.$$

Apply the resolvent to (B.3). We get

$$f(\boldsymbol{r},t)+\mathcal{N}f(\boldsymbol{r},t)=H(\boldsymbol{r},t),\quad \boldsymbol{r}\in S,t>0,\tag{B.4}$$

where ($\boldsymbol{r}\in S,t>0$)

$$\begin{cases}H(\boldsymbol{r},t)=-G(\boldsymbol{r},t)-\left(L(\cdot)*G(\boldsymbol{r},\cdot)\right)(t),\\ \mathcal{N}f(\boldsymbol{r},t)=\displaystyle\int_0^\infty\iint_S\left(M(\boldsymbol{r},t,\boldsymbol{r}',t')+\left(L(\cdot)*M(\boldsymbol{r},\cdot,\boldsymbol{r}',t')\right)(t)\right)f(\boldsymbol{r}',t')\,dS'\,dt'.\end{cases}$$

This equation can be inverted and the solution is formally

$$f(\boldsymbol{r},t)=((\mathcal{I}+\mathcal{N})^{-1}H)(\boldsymbol{r},t),\quad \boldsymbol{r}\in S,t>0.$$

We want to briefly indicate that the operator $\mathcal{I}+\mathcal{N}$ can be inverted by iteration. Since $\mathcal{N}=(\mathcal{I}-L*)\mathcal{M}$ we need only to study the behavior of the operator $\mathcal{M}$ whose kernel is given by

$$M(\boldsymbol{r},t;\boldsymbol{r}',t')=\left([\chi](\cdot)*\hat{n}\cdot\nabla_T'\left\{\mathcal{E}(\boldsymbol{r},\cdot,\boldsymbol{r}',t')-\mathcal{E}(\boldsymbol{r}-2z\hat{z},\cdot,\boldsymbol{r}',t')\right\}\right)(t),\tag{B.5}$$

and in particular to study only the first part in this expression. This has the form

$$\begin{aligned}
&\Big([\chi](\cdot) * \hat{n}\cdot\nabla'_T\mathcal{E}(\boldsymbol{r},\cdot,\boldsymbol{r}',t')\Big)(t)\\
&\quad=\frac{\hat{n}\cdot\hat{R}}{4\pi\left|\boldsymbol{r}-\boldsymbol{r}'\right|}\Big\{\frac{1}{\left|\boldsymbol{r}-\boldsymbol{r}'\right|}[\chi]\left(t-t'-\left|\boldsymbol{r}-\boldsymbol{r}'\right|/c\right)\\
&\qquad+\frac{1}{c}[\chi_t]\left(t-t'-\left|\boldsymbol{r}-\boldsymbol{r}'\right|/c\right)\Big\}H(t-t'-\left|\boldsymbol{r}-\boldsymbol{r}'\right|/c)\\
&\qquad+\Big([\chi](\cdot) * \hat{n}\cdot\nabla'_T\mathcal{E}_1(\boldsymbol{r},\cdot,\boldsymbol{r}',t')\Big)(t),
\end{aligned}\tag{B.6}$$

where the unit vector $\hat{R}$ is

$$\hat{R}=\frac{\boldsymbol{r}-\boldsymbol{r}'}{\left|\boldsymbol{r}-\boldsymbol{r}'\right|}.$$

Because $\mathcal{E}_1(\boldsymbol{r},t;\boldsymbol{r}',t')$ behaves like $H(t-t'-\left|\boldsymbol{r}-\boldsymbol{r}'\right|/c)$, all terms in expression (B.6) vanish for $t<t'+\left|\boldsymbol{r}-\boldsymbol{r}'\right|/c$. Applying this result to the second term in (B.5), it can be shown that the kernel $M(\boldsymbol{r},t;\boldsymbol{r}',t')=0$ for $t<t'$. Restricting the study of the operator $\mathcal{M}$ to a finite time interval, $0<t<T$, it follows that the kernel $M(\boldsymbol{r},t;\boldsymbol{r}',t')$ is non-zero only on a bounded portion of the cylindrical surface S. Apart from the factor $[\chi](t-t'-\left|\boldsymbol{r}-\boldsymbol{r}'\right|/c)H(t-t'-\left|\boldsymbol{r}-\boldsymbol{r}'\right|/c)$, which is continuous in $\boldsymbol{r}$ and $\boldsymbol{r}'$ (since $[\chi](0)=0$), the leading singular term in the expression (B.6) is given by

$$\frac{\hat{n}\cdot\hat{R}}{\left|\boldsymbol{r}-\boldsymbol{r}'\right|^2}.\tag{B.7}$$

For a bounded C^2 surface S, the factor $\hat{n}\cdot\hat{R}$ is bounded as follows:

$$\hat{n}\cdot\hat{R}\leq\text{Constant}\left|\boldsymbol{r}-\boldsymbol{r}'\right|.\tag{B.8}$$

Thus, the double-layer potential operator, with (B.7) as kernel, maps bounded functions on S into continuous functions on S. This result can be generalized by the first term of (B.6). In light of inequality (B.8), the second term in (B.6) is bounded at $\boldsymbol{r}=\boldsymbol{r}'$. Because the remaining terms are not as singular as the first two, and that the kernel $M(\boldsymbol{r},t;\boldsymbol{r}',t')$ vanish for $t<t'$, one can infer that

$$|\mathcal{M}f|\leq\text{Constant}\|f\|t,\quad 0\leq t\leq T,$$

for a bounded function $f(\boldsymbol{r},t)$. Thus, the operator $\mathcal{M}$ is of Volterra type and $(\mathcal{I}+\mathcal{M})^{-1}$, and therefore also $(\mathcal{I}+\mathcal{N})^{-1}$, can be obtained through iteration (similar results are given in Appendix A).

Now recalling the definitions of functions H, G and g and interchanging the order of integration we get:

$$f(\boldsymbol{r},t)=\int_0^\infty\iint_{\mathbb{R}^2}\boldsymbol{S}_0(\boldsymbol{r},t;\boldsymbol{\rho}',t')\cdot\boldsymbol{f}_T(\boldsymbol{\rho}',t')\,d\boldsymbol{\rho}'\,dt',\quad \boldsymbol{r}\in S,t>0,$$

where

$$\boldsymbol{S}_0(\boldsymbol{r},t;\boldsymbol{\rho}',t') = -\,\hat{n}(\mathcal{I}+\mathcal{N})^{-1}\Big\{\Big([\chi]\,(\cdot) * \frac{\partial}{\partial z'}\,\widetilde{\mathcal{E}}(\boldsymbol{r},\cdot,\boldsymbol{r}',t')\Big|_{z'=0}\Big)(t) + \Big(L(\cdot) * \Big([\chi]\,(\bullet) * \frac{\partial}{\partial z'}\,\widetilde{\mathcal{E}}(\boldsymbol{r},\bullet,\boldsymbol{r}',t')\Big|_{z'=0}(\cdot)\Big)\Big)(t)\Big\}.$$

The last integral in (4.5) can be written in a dyadic notation as

$$\int_0^\infty \iint_{\mathbb{R}^2} \Big\{\int_0^\infty \iint_S \nabla'_T\widetilde{\mathcal{E}}(\boldsymbol{r},t;\boldsymbol{r}',t')\boldsymbol{S}_0(\boldsymbol{\rho}',t';\boldsymbol{\rho}'',t'')\,dS'\,dt'\Big\}\cdot\boldsymbol{f}_T(\boldsymbol{\rho}'',t'')\,d\boldsymbol{\rho}''\,dt''$$
$$= \int_0^\infty \iint_{\mathbb{R}^2} \mathbf{S}(\boldsymbol{r},t;\boldsymbol{\rho}',t')\cdot\boldsymbol{f}_T(\boldsymbol{\rho}',t')\,d\boldsymbol{\rho}'\,dt',$$

where

$$\mathbf{S}(\boldsymbol{r},t;\boldsymbol{\rho}',t') = \int_0^\infty \iint_S \nabla'_T\widetilde{\mathcal{E}}(\boldsymbol{r},t;\boldsymbol{r}'',t'')\boldsymbol{S}_0(\boldsymbol{r}'',t'';\boldsymbol{\rho}',t')\,dS''\,dt'',$$

The kernel $\mathbf{S}(\boldsymbol{r},t;\boldsymbol{\rho}',t')$ is a classical function. Finally, write the transverse field $\boldsymbol{E}_T$ in equation (4.5) in the form ($z \geq 0, t > 0$)

$$\boldsymbol{E}_T(\boldsymbol{r},t) = \iint_{\mathbb{R}^2} \frac{z\boldsymbol{f}_T(\boldsymbol{\rho}',t-|\boldsymbol{r}-\boldsymbol{\rho}'|/c)}{2\pi|\boldsymbol{r}-\boldsymbol{\rho}'|^3}\,d\boldsymbol{\rho}' + \iint_{\mathbb{R}^2} \frac{z\frac{\partial\boldsymbol{f}_T}{\partial t}(\boldsymbol{\rho},t-|\boldsymbol{r}-\boldsymbol{\rho}'|/c)}{2c\pi|\boldsymbol{r}-\boldsymbol{\rho}'|^2}\,d\boldsymbol{\rho}' + \int_0^\infty \iint_{\mathbb{R}^2} \mathbf{T}(\boldsymbol{r},t;\boldsymbol{\rho}',t')\cdot\boldsymbol{f}_T(\boldsymbol{\rho}',t')\,d\boldsymbol{\rho}'\,dt',$$

or

$$\boldsymbol{E}_T(\boldsymbol{r},t) = \int_0^\infty \iint_{\mathbb{R}^2} W(\boldsymbol{r},t;\boldsymbol{\rho}',t')\boldsymbol{f}_T(\boldsymbol{\rho}',t')\,d\boldsymbol{\rho}'\,dt' + \int_0^\infty \iint_{\mathbb{R}^2} \mathbf{T}(\boldsymbol{r},t;\boldsymbol{\rho}',t')\cdot\boldsymbol{f}_T(\boldsymbol{\rho}',t')\,d\boldsymbol{\rho}'\,dt'.$$

The singular kernel $W(\boldsymbol{r},t;\boldsymbol{\rho}',t')$ is

$$W(\boldsymbol{r},t;\boldsymbol{\rho}',t') = -\frac{\partial}{\partial z}\frac{\delta(t-t'-|\boldsymbol{r}-\boldsymbol{\rho}'|/c)}{2\pi|\boldsymbol{r}-\boldsymbol{\rho}'|},$$

and $\mathbf{T}(\boldsymbol{r},t;\boldsymbol{\rho}',t')$ is

$$\mathbf{T}(\boldsymbol{r},t;\boldsymbol{\rho}',t') = \left\{\frac{\partial}{\partial z'}\,\widetilde{\mathcal{E}}(\boldsymbol{r},t;\boldsymbol{r}',t')\Big|_{z'=0} - W(\boldsymbol{r},t;\boldsymbol{\rho}',t')\right\}\mathbf{I} + \mathbf{S}(\boldsymbol{r},t;\boldsymbol{\rho}',t'),$$

where $\mathbf{I}$ is the unit dyadic in two dimensions.

Appendix C Boundary integrals

In this appendix we show that

$$\begin{aligned}&\lim_{\boldsymbol{r}\to\boldsymbol{r}_0\pm 0}\int_0^\infty \iint_S V(\boldsymbol{r},t;\boldsymbol{r}',t')f(\boldsymbol{r}',t')\,dS'\,dt'\\&=\int_0^\infty \iint_S V(\boldsymbol{r}_0,t;\boldsymbol{r}',t')f(\boldsymbol{r}',t')\,dS'\,dt' \pm f(\boldsymbol{r}_0,t) \qquad \boldsymbol{r}_0\in S,\end{aligned} \tag{C.1}$$

where $V(\boldsymbol{r},t;\boldsymbol{r}',t')$ is defined in (B.2) and S is the boundary surface defined in Section 2. The limits $S\pm 0$ are taken with respect to the normal $\hat{n}$ of the surface S.

It follows from (B.2) and (A.12) that the function $V(\boldsymbol{r},t;\boldsymbol{r}',t')$ in (C.1) can be decomposed in a sum of three terms: a well-behaved part, a "Heaviside" part and a singular part $V_s(\boldsymbol{r},t;\boldsymbol{r}',t')$. It is easy to see that the integrals of the first two parts are continuous across the surface S, so we need only to consider the singular part $V_s(\boldsymbol{r},t;\boldsymbol{r}',t')$, where

$$V_s(\boldsymbol{r},t;\boldsymbol{r}',t') = 2\hat{n}\cdot\nabla'_T\left(\frac{\delta(t-t'-|\boldsymbol{r}-\boldsymbol{r}'|/c)}{4\pi|\boldsymbol{r}-\boldsymbol{r}'|}-\frac{\delta(t-t'-|\boldsymbol{r}-2z\hat{z}-\boldsymbol{r}'|/c)}{4\pi|\boldsymbol{r}-2z\hat{z}-\boldsymbol{r}'|}\right).$$

Now define for $\boldsymbol{r}\notin S$

$$v(\boldsymbol{r},t)=\int_0^\infty\iint_S V_s(\boldsymbol{r},t;\boldsymbol{r}',t')f(\boldsymbol{r}',t')\,dS'\,dt'.$$

Define a new surface S_0 which is the union of surface S and its mirror image in the plane $z=0$, i.e. $S_0=\{\boldsymbol{r};(x,y,|z|)\in S\}$. For $z<0$ define $f(\boldsymbol{r},t)=-f(\boldsymbol{r}-2z\hat{z},t)$, $\boldsymbol{r}\in S$. Then the previous expression can be rewritten as

$$\begin{aligned}v(\boldsymbol{r},t)&=\int_0^\infty\iint_{S_0} 2\hat{n}\cdot\nabla'\left(\frac{\delta(t-t'-|\boldsymbol{r}-\boldsymbol{r}'|/c)}{4\pi|\boldsymbol{r}-\boldsymbol{r}'|}\right)f(\boldsymbol{r}',t')\,dS'\,dt'\\&=\frac{1}{2\pi}\iint_{S_0}\left\{\hat{n}\cdot\nabla'\left(\frac{1}{|\boldsymbol{r}-\boldsymbol{r}'|}\right)f(\boldsymbol{r}',t-|\boldsymbol{r}-\boldsymbol{r}'|/c)\right.\\&\quad\left.+\frac{\hat{n}\cdot\nabla'|\boldsymbol{r}-\boldsymbol{r}'|}{|\boldsymbol{r}-\boldsymbol{r}'|c}f_t(\boldsymbol{r}',t-|\boldsymbol{r}-\boldsymbol{r}'|/c)\right\}dS'\end{aligned}$$

where we require that $f(\boldsymbol{r},t)$ and $f_t(\boldsymbol{r},t)$ are continuous in time and on the surface S_0 for $0\le t\le T$, so we can assume that $|f(\boldsymbol{r},t)|\le M$, $|f_t(\boldsymbol{r},t)|\le M$ for some real M. Furthermore, it is assumed that $f(\boldsymbol{r},t)$ is compactly supported on S_0. The

integral $v(\boldsymbol{r},t)$ can be written as a sum of two integrals I_1 and I_2, where

$$\begin{aligned} I_1 =& \frac{1}{2\pi} \iint\limits_{S_0} \hat{n}\cdot\nabla' \left(\frac{1}{|\boldsymbol{r}-\boldsymbol{r}'|}\right) f(\boldsymbol{r}',t)\, dS' \\ I_2 =& \frac{1}{2\pi} \iint\limits_{S_0} \frac{\hat{n}\cdot\nabla'|\boldsymbol{r}-\boldsymbol{r}'|}{|\boldsymbol{r}-\boldsymbol{r}'|^2} \Big\{ (f(\boldsymbol{r}',t) - f(\boldsymbol{r}',t-|\boldsymbol{r}-\boldsymbol{r}'|/c) \\ &+ \frac{|\boldsymbol{r}-\boldsymbol{r}'|}{c} f_t(\boldsymbol{r}',t-|\boldsymbol{r}-\boldsymbol{r}'|/c) \Big\} dS' \end{aligned}$$

Take now the limit $\boldsymbol{r} \to \boldsymbol{r}_0 \pm 0$ where $\boldsymbol{r}_0 \in S$. Noting that the first integral is the derivative of a single-layer potential, we have [4] (f continuous in $\boldsymbol{r}$ and S_0 a Lyapunov surface)

$$I_1(\boldsymbol{r},t) \to \pm f(\boldsymbol{r}_0,t) + \frac{1}{2\pi} \iint\limits_{S_1} \hat{n}\cdot\nabla' \left(\frac{1}{|\boldsymbol{r}-\boldsymbol{r}'|}\right) f(\boldsymbol{r}',t)\, dS'$$

Here we have closed the surface S_0 to get a bounded closed surface S_1 in such a way that it does not change the value of the integral, i.e. we added some surfaces at the ends of the cylinder S_0 at $|z| = B$, where $f(\boldsymbol{r},t) = 0$ for $0 < t < T$, $|z| > B$.

In the second integral I_2 we have

$$\begin{aligned} &|f(\boldsymbol{r}',t-|\boldsymbol{r}-\boldsymbol{r}'|/c) - f(\boldsymbol{r}',t)| \le \frac{|\boldsymbol{r}-\boldsymbol{r}'|}{c} M \\ &|f_t(\boldsymbol{r}',t-|\boldsymbol{r}-\boldsymbol{r}'|/c)| \le M \end{aligned}$$

So the integrand behaves like $\hat{n}\cdot\nabla'(|\boldsymbol{r}-\boldsymbol{r}'|)/|\boldsymbol{r}-\boldsymbol{r}'|$ which is a weakly singular kernel. So there is no jump discontinuity in the integral $I_2(\boldsymbol{r},t)$ when $\boldsymbol{r} \to \boldsymbol{r}_0 \pm 0$ where $\boldsymbol{r}_0 \in S$.

References

[1] L. Brillouin. *Wave propagation and group velocity.* Academic Press, New York, 1960.

[2] S. Ström. Introduction to integral representations and integral equations for time-harmonic acoustic, electromagnetic and elastodynamic wave fields. In V. V. Varadan, A. Lakhtakia, and V. K. Varadan, editors, *Field Representations and Introduction to Scattering*, Acoustic, Electromagnetic and Elastic Wave Scattering, chapter 2, pages 37–141. Elsevier Science Publishers, Amsterdam, 1991.

[3] Z. Sun and V. H. Weston. Time domain direct scattering for a dispersive medium via wave splitting and Green function methods in $\mathbb{R}^3$. Technical report, Applied Mathematical Sciences, Ames Laboratory, Iowa State University, Ames, IA 50011, USA, 1995.

[4] V. S. Vladimirov. *Equations of Mathematical Physics.* Mir Publishers, Moscow, 1984.

[5] V. H. Weston. Factorization of the wave equation in higher dimensions. *J. Math. Phys.*, **28**, 1061–1068, 1987.

[6] V. H. Weston. Wave splitting and the reflection operator for the wave equation in $\mathbb{R}^3$. *J. Math. Phys.*, **30**(11), 2545–2562, 1989.

[7] V. H. Weston. Invariant imbedding for the wave equation in three dimensions and the applications to the direct and inverse problems. *Inverse Problems*, **6**, 1075–1105, 1990.

[8] V. H. Weston. Invariant imbedding and wave splitting in $\mathbb{R}^3$: II. The Green function approach to inverse scattering. *Inverse Problems*, **8**, 919–947, 1992.

[9] V. H. Weston. Time-domain wave-splitting of Maxwell's equations. *J. Math. Phys.*, **34**(4), 1370–1392, 1993.