LUND UNIVERSITY

Process Control—Past, Present, and Future

Åström, Karl Johan

Published in:
IEEE Control Systems Magazine

DOI:
10.1109/MCS.1985.1104958

1985

Link to publication

Citation for published version (APA):
Åström, K. J. (1985). Process Control—Past, Present, and Future. *IEEE Control Systems Magazine*, *5*(3), 3-10. https://doi.org/10.1109/MCS.1985.1104958

Total number of authors:
1

General rights
Unless other specific re-use rights are stated the following general rights apply:
Copyright and moral rights for the publications made accessible in the public portal are retained by the authors and/or other copyright owners and it is a condition of accessing publications that users recognise and abide by the legal requirements associated with these rights.
• Users may download and print one copy of any publication from the public portal for the purpose of private study or research.
• You may not further distribute the material or use it for any profit-making activity or commercial gain
• You may freely distribute the URL identifying the publication in the public portal

Read more about Creative commons licenses: https://creativecommons.org/licenses/

Take down policy
If you believe that this document breaches copyright please contact us providing details, and we will remove access to the work immediately and investigate your claim.

LUND UNIVERSITY

PO Box 117
221 00 Lund
+46 46-222 00 00

Process Control—Past, Present, and Future

Karl Johan Aström

ABSTRACT: This paper gives a perspective on the development of process control from the early development and the emergence of the automation industry to today's computer-controlled systems. Some speculations on future developments are also given.

Introduction

Process industries include oil, chemicals, electrical power, pulp and paper, mining, metals, cement, pharmaceuticals, and foods and beverages. Process control is the science and technology for automation in these industries. The purpose of this paper is to give a perspective on the past and the present of process control and some speculations on its future development. A brief review of the early development provides background and a summary of the current state of the art. The major incentives for process control are then presented. The section titled "Functions" deals with the functions of process control systems and their structures with the presentation divorced from the technology. Some speculations about the future development are made, which are governed by progress in process knowledge, measurement, and computer and control technology. The possibilities and limitations are discussed with a few remarks on the social effects of automation. Conclusions about possible future directions are summarized in the last section.

Early Development

The process industries developed in connection with the industrial revolution, when human muscle power was substituted for machines. The early processes were batch operation, typically scaled-up versions of previous manual practice. The advantages of continuous operation soon became apparent. This trend was reinforced because the production processes were based on flow of materials. The process industries are convenient to automate because of this. The trend toward increased automation and continuous operation have often gone hand in hand.

Karl Johan Åström is with the Dept. of Automatic Control, Lund Institute of Technology, Lund, Sweden.

The processes were originally controlled and supervised manually. Some control and supervising functions were gradually automated when equipment for measuring flows and quality were developed. Separate industries for manufacturing of control equipment developed starting from production of control valves, measuring equipment, and simple regulators.

The control systems were originally quite primitive. The control function was often integrated with sensor and actuator functions like in the centrifugal governors and direct-acting temperature controllers. On-off control was widely used in process industry by mid-1920. Although the idea of proportional control was known in the late eighteenth century in connection with control of windmills and steam engines, it was not until the end of the 1920s that it started to be widely used in the process industries. See [6] and [26].

Design, installation, and tuning of regulators were originally made on a purely empirical basis. When regulators with proportional, integral, and derivative action became more common in the 1930s, there was a need to understand the tuning problem and to have proper tuning tools, which stimulated theoretical analyses of control loops by Mason, Ivanoff, Mitereff, and Callender et al. ([25], [22], [28], [10]). The first theoretical results were actually made earlier by Maxwell and others. Important results were obtained by Ziegler and Nichols [42], who developed a simple theory that led to tuning procedures, which are still widely used.

Emergence of an Automation Industry

The technological innovations during the Second World War had a significant impact on process control. Application of electronic instruments for process control started in the beginning of the fifties. Standards for signal transmission, 3–15 psi in standard sized tubes for pneumatic signals and 4–20 mA for electric signals, were established. The control system was modularized in terms of sensors, transducers, regulators, actuators, and recorders. This simplified design, installation, operation, and maintenance. Because of the standards, it was easy to combine equipment from different manufacturers. Implementation of process control systems in terms of remote sensors and actuators and a central control room with PID regulators became the general solution to process automation. The standard control systems used *set-point control*. This means that each control loop attempts to keep the process variables close to a given value (set point), in spite of process disturbances. The set points were adjusted manually by the operators. Small production changes were made simply by changing the set points. For large-grade changes, the regulators were switched to manual mode, and processes were operated manually by the operators. Some plant operations like start-up and shut-down were sometimes automated by relay systems, which were separate from the control system. The relay systems included logic control as well as sequence control.

The control loops were designed intuitively. Regulators were introduced on one important process variable after each other without taking interactions into account. This led occasionally to difficulties because of the interactions among the process variables. The regulators were tuned using simple rules of the Ziegler-Nichols type.

The relay systems and the control systems were viewed as different units. They were designed and installed by different groups. It was not uncommon that the control and relay systems were opposing each other under some operating conditions.

The importance of *process dynamics*, i.e., the time behavior of changes in process variables in response to changes in disturbances or operating conditions, soon became apparent when process automation spread. The practice of determining dynamics by measuring responses to pulses, steps, and sinusoids started. There was also some awareness that process dynamics could be drastically influenced by plant design. These observations stimulated research into process dynamics, which resulted in books like Campbell [11], Eckman [16], and Buckley [9].

The automation technology turned out to be very useful. It gained rapid acceptance in the process industry. A particularly attractive feature was that the automation system could be built up from a few standard components, which could be manufactured in

0272-1708/85/0800-0003/$01.00 © 1985 IEEE

large series and adapted to a large variety of individual plants.

A system for process automation, which is composed of a collection of panel-mounted standard regulators and separated relay systems, is used to represent a system of the past in this paper. Such systems are still in operation in many processes.

Computer-Controlled Systems

The thought of using digital computers for process control emerged in the mid-fifties. The aerospace company, TRW, and the oil company, Texaco, made a feasibility study for computer control of a polymerization unit at the Port Arthur refinery in Texas. A computer-controlled system was designed based on the computer RW-300. The control system went on line on March 12, 1959. The essential functions were to minimize the reactor pressure, to determine an optimal distribution between the feeds of five reactors, to control the hot water inflow based on measurement of catalyst activity, and to determine the optimal recirculation. (See [34] and [23].)

A special-purpose digital computer for process control, the IBM 1700, was developed by IBM. This computer was installed at American Oil in Indiana, at Standard Oil of California, and at Du Pont in 1961 [13]. The installations at the oil companies were operated for many years. A new standard computer for process control, the IBM 1710, was announced in early 1961 [21].

The pioneering work done was observed by many process industries and computer manufacturers who saw potential productivity increases and new markets for computers. Many feasibility studies were started, and a vigorous development was initiated. To discuss the dramatic developments that followed the pioneering work, it is useful to introduce three periods: the pioneering period, the direct digital control (DDC) period, and the microcomputer period. It is difficult to give precise dates for the periods because the developments were highly diversified. There is a wide difference between different application areas and different industries. There is also a considerable overlap.

The Pioneering Period

The computers used during this period were large, slow, expensive, and unreliable. To justify a computer installation, it was necessary to fill them with many tasks. Although sensors for flow, temperature, and level were available,-there were few on-line sensors for measuring composition and quality variables. Because the computers were so unreliable, they had to be used in *supervisory modes* only, while ordinary analog controllers were used for the primary control functions. Two different approaches emerged. In the *operator guide* mode, the computer simply gave instructions to the operator about set points for the analog controllers. In the *setpoint control* mode, the set points were adjusted automatically from the computer.

The major tasks of the computer were to find good operating conditions, to perform scheduling and production planning, and to give reports about production, energy, and raw-material consumption. The problem of finding the best operating conditions was viewed as a static optimization problem. Mathematical models of the processes were necessary in order to perform the optimization. The models used were quite complicated. They were derived from physical models and from regression analysis of process data. Attempts were also made to carry out on-line optimization.

Progress was hampered by lack of process knowledge. It also became clear that it was not sufficient to view the problems simply as static optimization problems; dynamic models were needed. A significant proportion of the effort in many of the feasibility studies was devoted to modeling, which was quite time-consuming. It was clear that there was a lack of a good modeling methodology. This stimulated research into system identification methods.

The problems encountered during the pioneering period are typical for introduction of new technology into traditional industries. There are many examples of disasters and success stories. Automation of the Gruvön paper mill in Sweden was one of the successful early projects in Sweden [17].

A lot of experience was gained during the feasibility studies. It became clear that the demand for fast response to external events imposed special requirements on computer architecture and software. It was also found that many sensors were missing. There were also several difficulties when trying to introduce a new technology into old industries [18], [27], [30], [40].

The progress made was closely monitored at conferences and meetings and in journals. A series of articles describing the use of computers in process control was published in the journal *Control Engineering*. By March 1961, a total of 37 systems had been installed. A year later, the number of systems had grown to 159. The applications involved control of steel mills, chemical industries, and the generation of electric power. The development progressed at different rates in different industries. Feasibility studies continued through the sixties and the seventies.

Direct Digital Control and Minicomputer Periods

The early computer-controlled installations all operated in the supervisory mode. A drastic departure from this approach was made by Imperial Chemical Industries Ltd. (ICI) in England in 1962. A complete analog instrumentation for process control was replaced by one computer, a *Ferranti Argus* [35]. This was the beginning of a new era in process control, where analog technology was simply replaced by digital technology. The function of the system was the same. The name *direct digital control* was coined to emphasize that the computer controlled the process directly. An operator communication panel can replace a large wall of analog instruments. The panel used in the ICI system was very simple: a digital display and a few buttons.

The digital technology also offered other advantages. It was easy to have interaction between several control loops. The parameters of a control loop could be made functions of operating conditions.

The programming was simplified by introducing special DDC languages. A user of such a language did not have to know anything about programming. The user simply introduced inputs, outputs, regulator types, scale factors, and regulator parameters into tables. To the user, the systems thus looked like a connection of ordinary regulators. A drawback with the systems was that it was difficult to do unconventional control strategies. This certainly hampered development of control for many years.

Considerable progress was made in the years 1963–1965. Specifications for DDC systems were worked out jointly between users and vendors. Problems related to choice of sampling period and control algorithms were discussed extensively [12], [39].

The poor reliability of the digital computer hampered progress on the DDC for a while. Advances in integrated circuit technology, which led to cheaper, smaller, faster, and more reliable computers, removed this obstacle. The term *minicomputer* was coined for the new computers that emerged [19]. Using minicomputers, it was possible to design efficient process control systems based on the DDC concept. In combination with the increasing knowledge about process control with computers gained during the pioneering and the DDC periods, the development of minicomputer technology gave rise to a rapid increase in applications of computer control. Special process control computers were announced by several manufacturers.

An important factor in the rapid increase of computer control in this period was that digital computer control now came in a smaller "unit." It was thus possible to use computer control for smaller projects and for smaller problems.

The DDC concept was quickly accepted in spite of the fact that DDC systems often turned out to be more expensive than the corresponding analog systems. Because of the minicomputers, the number of process computers grew from about 5000 in 1970 to about 50,000 in 1975.

Microcomputers and Distributed Systems

The minicomputer is still a fairly expensive system. Computer control was still out of reach for many control problems. The development of the microcomputer in 1972 has had far-reaching consequences. Computers became so small and inexpensive that computer control could be considered for practically all applications.

With the microprocessors, it was also possible to switch technology for the functions that were originally made by relay systems. Special-purpose programmable logic computers (PLC) appeared for realization of the logic and sequencing functions.

The microcomputers have already had a drastic influence on control equipment. Microcomputers are replacing analog hardware even in single-loop controllers. Small DDC systems have been made using microcomputers. The operator communication has been vastly improved in these systems by using color video graphic displays. The first distributed computer-controlled system was announced by Honeywell in 1975. Hierarchical control systems with a large number of microprocessors have been constructed. Special-purpose regulators based on microcomputers have been designed. The PLC systems are widely accepted as replacement for relay systems. Applications showed that in many cases, it was advantageous to have both control (DDC) logic and sequencing functions (PLC) in the same system. DDC systems were thus provided with PLC functions and vice versa. Rational approaches to the design of systems that combine the functions have been initiated.

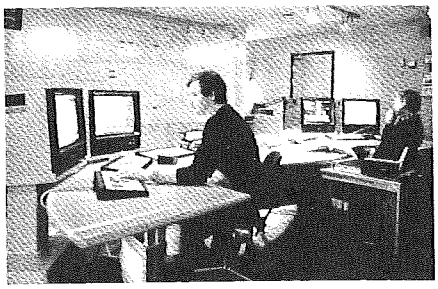

Fig. 1. Control room for a distributed process control system based on microprocessor technology.

A hierarchical process control system built on microprocessor technology is chosen to represent a system called the *present* in this paper. A typical control room is shown in Fig. 1.

Incentives for Process Control

The following are some often-quoted incentives for process control: better quality, better reproducibility, better use of energy and raw materials, increased production, improved reporting, lower costs, and less pollution. It is not always easy to justify these incentives quantitatively. Improvements in steady-state regulation and in reduced time for grade changes are, however, relatively easy to evaluate quantitatively. This will be discussed in more detail.

There is now considerable experience in the use of automation in the process industries. Investments in automation often appear high up on the lists of investments for productivity improvements. A standard figure often used in the petroleum industry is a payback time of 18 months. More spectacular improvements have been reported in some cases [20].

Improved Regulation

Because of disturbances, there are always fluctuations in the process variables. It is then necessary to choose the set point of the regulators some distance away from the quality limit, as shown in Fig. 2. The magnitude of the fluctuations can be reduced by improved control strategies. The set point can then be moved closer to the quality limit. The average distance between the set point and the quality limit can be used as a measure of the improvements due to better control. The economic benefit can be measured in terms of increased production, or reduced use of energy and raw material. Improvements of fractions of a percent can represent considerable savings for control of important quality variables in plants with high production. Typical examples are control of basis weight and moisture content on a paper machine and control of thickness in rolling mills.

Reduced Time for Grade Changes

Large grade change may take considerable time because it may be necessary to many variables in a plant. When changes are made manually, they are often made gradually one at a time to avoid large upsets. If the process dynamics is known, many variables can be changed simultaneously and the effect of the changes can also be monitored closely to detect deviations from the planned program and to make the appropriate corrections. The time reduction in a grade change is easy to measure. The benefits show up in terms of less waste of production during grade changes, increased production rate, and shorter delivery times for odd grades.

Plant Control

Many plants consist of a collection of sub-

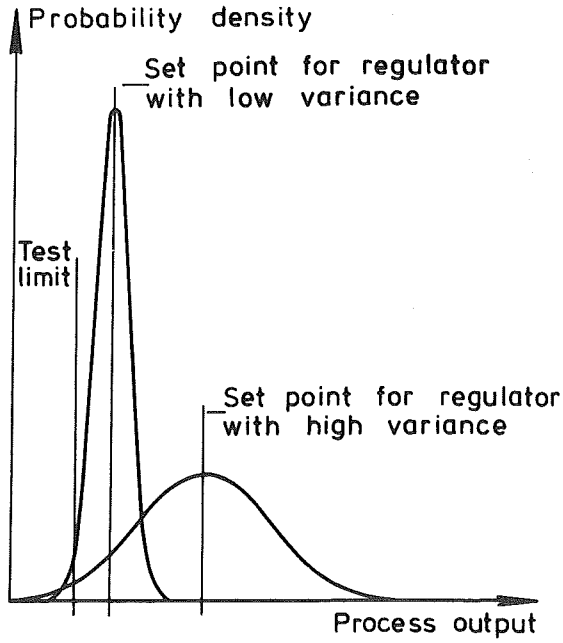

Fig. 2. With improved regulation, the set point can be moved closer to the target.

processes, which are operated more or less independently. Differences in production rates are absorbed by storage tanks. There may be a considerable economic incentive in coordinating the operation of the subprocesses. This incentive shows up in terms of reduced stop time, reduction of the sizes of the storage tanks, and a reduction of the total stored material [37], [38]. A block diagram of a paper mill where such a scheme was first tried is shown in Fig. 3 [32]. The PMPC system developed by ASEA is a second-generation plant control system. Savings of $260K per year have been reported from use of this system [33].

Functions

The major functions of a process control system and its structure will be discussed next. A schematic diagram of a process control system is shown in Fig. 4. The process to be automated is represented by a square box, and the different functions of the process control system are denoted by ellipsoids. Lines with arrows give the relations between the different functions. The process is provided with sensors for measurement of the important process variables, e.g., temperature, pressure, flow, level, velocity, and position. The measured signals are converted by a transducer. Desired control actions are determined by information processing of the measured signals; control actions are communicated, converted, and sent to actuators like valves and motors.

All systems also include humans as operators and managers. The process control system should give the operator the information

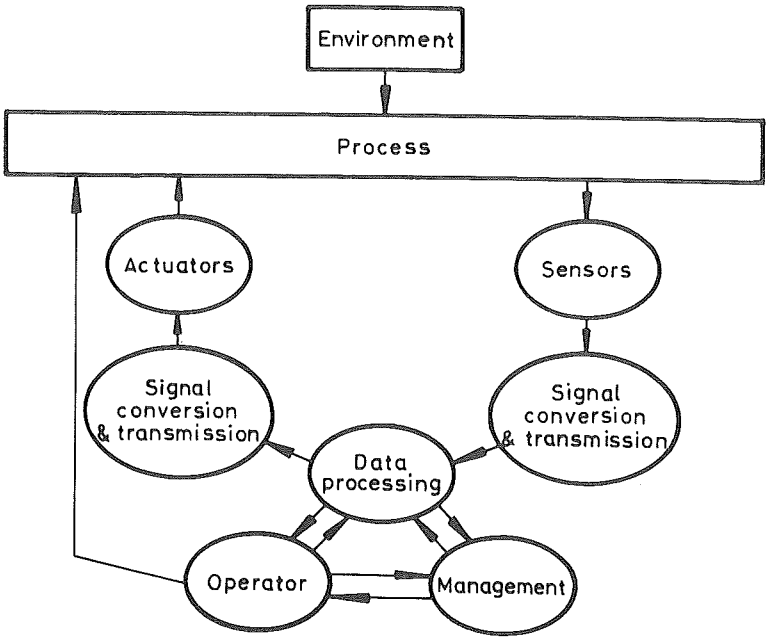

Fig. 4. Functions in a process control system.

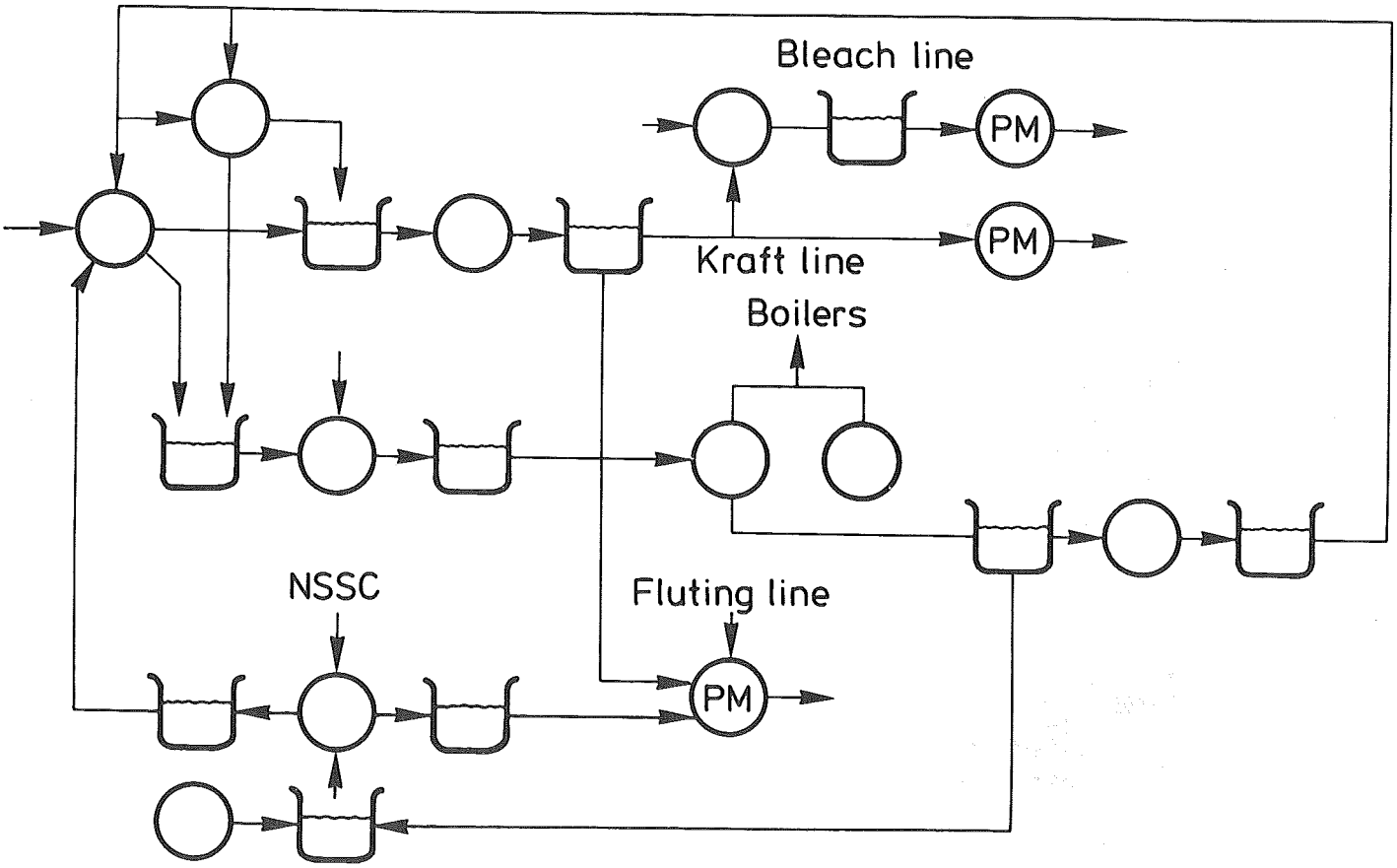

Fig. 3. Model for Gruvön paper mill used for the first production control system.

needed for normal operation and for emergencies. The operator may override the control system and run the process manually. The system should also give reports about production, consumption of energy and raw material, production stops, etc., to the management.

Structures

A system like the one shown in Fig. 4 can be implemented in many different ways. It can be centralized, decentralized, or hierarchical, as is illustrated in Fig. 5. This classification can refer to *functions* as well as to *locations*.

Sensing and actuation must always be done locally. In a functionally decentralized system, the information processing is also done locally for each control loop. In a functionally centralized system, all measurements are brought into a central-information processing unit. The information processing is distributed in an hierarchical system.

A functionally distributed system can also be geographically distributed. The early control systems where sensors, information processing, and actuation were done locally by one unit is a typical example. It can, however, also be geographically centralized. This is the case with the system shown in Fig. 1. Although the signal processing is done by one separate regulator for each loop, all regulators are mounted in the same control room, and all measured signals are transmitted to this room.

The different structures have different properties. A functionally decentralized system can be very reliable because failure of a single regulator only influences one loop; a functionally centralized system, on the other hand, will not function if there is a failure of the central-information processing unit. It is easy to introduce interaction between the loops in a system that is functionally and geographically centralized. This is more difficult to do in a decentralized system.

The early systems were functionally centralized. The first computer-controlled systems were centralized because the smallest available computers were quite large and costly. The availability of the microprocessor has opened the way to design hierarchical computer-controlled systems.

The Future

The evolution of process control has gone through an astounding development. Thirty years ago, it would have been quite difficult to visualize the present state of the art. The original exponential growth did not follow a straight path. There have been dead ends, false starts, and drastic changes in concepts and technology. It is very likely that the future development will follow similar patterns. This is useful to keep in mind when reading the following speculations, which are based on extrapolations of the past and present.

Since process control relies upon process knowledge, sensors, automatic control, and computers, the progress in these areas will be discussed separately. The progress in computer technology is the driving force because it is revolutionary rather than evolutionary. The other areas are developing in a more normal way.

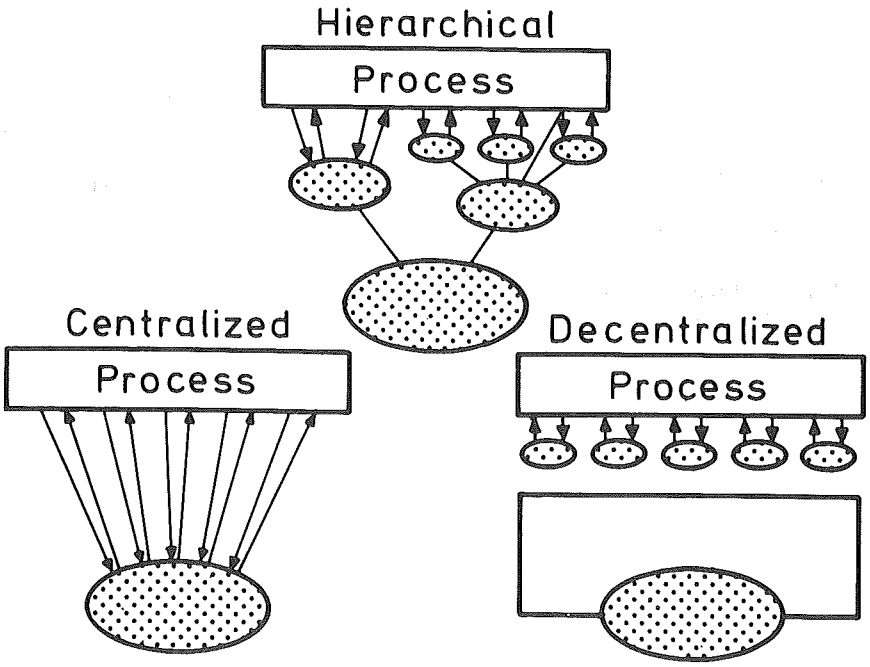

Fig. 5. Different system structures.

Computer Technology

Digital computers have developed remarkably over the past thirty years. The performance-price ratio has decreased by two orders of magnitude for each decade [31]. The development was obtained by changing technologies from tubes, via transistors, to integrated circuits. The integrated circuit technology has continuously been improved to obtain increasingly higher packing densities. Although the rate of increase seems to be falling a little, there are possibilities for much higher densities before the physical limits are reached. The chips are thus likely to improve. A consequence of this is that the distinction between micro-, mini-, and maxi-computers is no longer relevant. A future microcomputer may have a computing power comparable to that of a present main-frame computer. The most powerful chips that are now available as components have not been incorporated into process control systems. Furthermore, there are even more powerful chips available in laboratories. The possibilities of making custom very large scale integration have also stimulated experiments with new computer architectures like signal processing computers, which could be very useful as components of future process control systems.

The revolutionary developments in microelectronics will also have other consequences. Circuits for communication will be available as well as special circuits for high-resolution color graphics. Since circuits of these types will be used extensively in personal computers, there may be drastic price reductions due to the large volumes in this market.

It, therefore, seems safe to predict that computer hardware will continue to improve. This will be a strong driving force for the development of process control systems. The drastic improvements of the hardware can be used in many different ways. Symbolic processing, graphics, and artificial intelligence techniques like expert systems may be included in future process control systems [5]. It is also easy to use more complex control laws and to introduce tools for process analysis, simulation, and computer-aided engineering for design of control systems into the process control systems.

Computer Software

The progress in computer software has unfortunately not matched the development of hardware. Increases in productivity for soft-

ware development have, in fact, been at the modest level of about 5 percent per year. Software is still much of a craft where human ability is the key factor for productivity [8]. Investigations by Boehm [7] have shown that the productivity among different team programmers can vary as much as 4:1. Similar studies in Japan have given corresponding ratios of 3:1 [29]. Individuals may show considerably larger variations.

Because of the variations in abilities of individual programmers, it is difficult to estimate the effort required for a given programming task. A crude estimate is 10 lines of source code per staff day. Slightly better estimates are given by Boehm [7]. The effort is a function of the number of lines of source code independent of the programming language used. The benefits of using a high-level language are apparent because fewer lines of source code are required for a given task.

A consequence of the discrepancies of the development of hardware and software is a shift in the cost from hardware to software. The numbers may vary considerably between products. There is, however, general agreement concerning the trend. Also notice that maintenance is a substantial part of the software costs.

There are good indications that software production will be a bottleneck in the future. This is emphasized by the fact that the demand for programmers exceeds the supply. There are several initiatives for alleviating the software problem. The Department of Defense in the United States has developed a new programming language, Ada, for embedded systems, which is also being considered for process control. Ambitious programs for development of programming tools have also started [14], [15], [24]. A similar effort called ESPRIT has been launched by the EC [1]. It is difficult to tell the consequences of these efforts.

Process Knowledge

Throughout the development of process control, it has been noticed that process knowledge is a key element of process automation. Improved control can only be achieved by incorporating process knowledge into the control system. In the past, process knowledge resided with the process engineers. Transfer of this knowledge to the computer specialists was a very costly element of the early experiments with computer control. The process control systems that are available today require much less computer expertise. It can be expected that the increase in computing power that will be available in future systems will be used to make them easier to use. It will be important to make the systems flexible and open-ended so that unconventional control concepts can also be implemented. Present systems often leave a lot to be desired from this point of view.

Process control systems are excellent tools for acquiring more process knowledge. It is easy to log data and to perform experiments for learning more about the processes. Experiments may be performed by making small perturbations in the set points. The process dynamics can then be obtained by appropriate processing of the experimental data using system identification and parameter estimation techniques [2]. There are also computer-aided tools available, which drastically reduce the engineering effort required [4]. Such tools may be incorporated into future process control systems. The process engineer will then have excellent facilities for acquiring more knowledge about the system and for design of the control system.

Much of the process control done today can be described as automation of a given process. Control and dynamics are seldom considered at the process design stage. There are considerable incentives to consider automatic control already at the design stage. This gives additional freedom to design more efficient processes. Exothermic chemical reactors is a typical example. By proper design of a control system, they can be operated at equilibria, which are unstable without control. This has led to considerable savings in energy and the lifetime of the catalyst. The tendency of closing the plants to reduce pollution and raw-material consumption introduces additional requirements on the control system.

Sensors

Sensors are key elements of control systems because they give the information about the state of the process. Since the process industries are based on flow of material, much can be accomplished by standard sensors for pressure, flow, and temperature. There has been considerable progress in the development of sensors for measuring composition and product quality. Many of these measurements require that a sample be drawn from the product stream. There has also been considerable development of sampling techniques.

Progress in sensors may come from many different fields, which are far removed from the normal activities in the process industries. There are, for example, experiments with sensors based on microbiology that mimic the human sensory system.

Because of its innovative character, it is difficult to predict the development of future sensors. Developments should, however, be watched closely because availability of new sensors will invariably lead to new possibilities for automation. The development of automation of paper machines, which was based on invention of sensors for measuring basis weight and moisture content of a running paper sheet, is a typical example. These sensors were based on progress in techniques for measuring absorption of gamma rays and infrared light.

Sensors may also be combined with mathematical process models to give indirect measurement of variables that cannot be measured directly. Techniques like Kalman filtering and recursive estimation can be used to unify information from different sensors for the same variable, and to provide automatic calibration and diagnosis.

Control Algorithms

The control laws used in present process control systems include PID algorithms for DDC, functions for logic control and sequencing inherited from relay systems, different filters, and possibly some more advanced algorithms like the Smith predictor for control of systems with time delays.

There are few systems that admit more advanced control schemes like Kalman filtering, multivariable control, minimum variance control, and optimization, although these techniques have proven to be useful in a number of feasibility studies.

There are few tools for commissioning and tuning regulators. A consequence of this is that many PID regulators are poorly tuned. The lack of tuning tools has also been one stumbling block for wide-spread use of more advanced controls. There are two remedies. One possibility is to introduce tools for computer-aided engineering. Such tools are available, and they are beginning to be used in industry [4]. These tools can be conveniently incorporated into future process control systems. Another possibility is to use adaptive control.

Adaptive Control

Tuning of control loops is a time-consuming task, which requires competence in automatic control. Research in adaptive control, which now has reached a reasonable level of maturity, may offer a solution to the tuning problem [3]. The adaptive regulator can be thought of as being composed of two loops, one ordinary feedback loop with the process and the regulator, and one loop for adjusting the regulator parameters. The parameter adjustment is made in two steps. A model for the process is obtained from the

parameter estimator, which analyzes the response of the process to control signals. The regulator parameters are then calculated from the process model based on design calculations. The scheme is conceptually simple. It can be viewed as an automation of an ordinary design procedure.

Adaptive control is still in its infancy. A number of industrial feasibility studies have been performed; a few products have appeared on the market. There are many ways to use the technology. Automatic tuning can be provided, as well as true adaptive control. It can be expected that a much greater use will be made of adaptive techniques in future systems. ASEA is in the front line of this development with their recent products NOVATUNE and NOVAMAX.

Social Effects

Revolutionary technical developments have always had social consequences. Although changes are often felt as painful when they occur, they have good long-range effects. On a global scale, it is clear that there are very serious problems because the institutions we have are not well suited to handle the information society is moving toward today [36] [41].

From the more narrow perspective of the process industries, the problems are not so severe. First, the increased use of automation in the process industries will not lead to increased unemployment. There are relatively few persons working in typical process industries. Experience has also shown that increased process control has not led to fewer jobs. On the other hand, it is clear that there will be changes in job characterization. An operator in a highly automated process industry needs many different skills, and he or she may have a significant influence on the productivity. This has, in some cases, led industries to recruit operators with much higher skills than before. It may happen that some processes in the future will be run by operators having education and status similar to airline pilots.

Conclusions

This paper has attempted to give a perspective on the development of process control. The main points of the speculation on future development will be highlighted.

- The development of microelectronics will continue. This will lead to very powerful components for computing, communication, and graphics.
- Software will continue to be a bottleneck, although large programs are initiated to improve software productivity.
- Future process control systems will be distributed with man-machine interaction based on high-resolution color graphics. The substantial improvements in computing and storage capability will be used to simplify engineering and man-machine interaction. There may be increased use of symbolic processing and artificial intelligence techniques, like expert systems.
- The process knowledge will continue to increase. The process control systems themselves are excellent tools for process studies. This will be enhanced by incorporating computer-aided engineering tools for data analysis modeling and identification. There might be some examples of new processes, which are developed by combining traditional process design with control design.
- Much can be accomplished with available sensors. New possibilities for automation may be generated by invention of new sensors.
- The increase in computing power will lead to increased use of adaptive control and optimization. Systems that incorporate ideas from artificial intelligence may appear both for diagnosis and intelligent control.
- The scope of the systems will expand from instrumentation, through process control, production planning, office automation, and management information. The problem of communication standards will hopefully be solved.
- There will be changes in organization and job structures. Efficient use of the new technology will require new organizations. Process control will be less affected than society at large.

Finally, remember that there have been many dead ends and false starts in the past. This will probably continue.

References

[1] Anon, "Communication to the Council on Laying the Foundations for a Strategic Programme of Research and Development in Information Technology ESPRIT: The Pilot Phase," EC Document COM, vol. 82, p. 486, 1982.

[2] K. J. Åström and P. Eykhoff, "System Identification—A Survey," *Automatica*, vol. 7, pp. 123–162, 1971.

[3] K. J. Åström, "Theory and Applications of Adaptive Control—Plenary Lecture," *Proc. Eighth Triennial World Congress of IFAC*, Kyoto, Japan, pp. 24–28, Aug. 1981.

[4] K. J. Åström, "Computer-Aided Modeling, Analysis and Design of Control Systems—A Perspective," *IEEE Cont. Syst. Mag.*, 1983.

[5] A. Barr and E. A. Feigenbaum, *The Handbook of Artificial Intelligence*, Los Altos, CA: William Kaufmann, 1981.

[6] S. Bennett, *A History of Control Engineering 1800–1930*. London, England: Institution of Electrical Engineers, 1979.

[7] B. W. Boehm, *Software Engineering Economics*, Englewood Cliffs, NJ: Prentice-Hall, 1981.

[8] F. P. Brooks, Jr., *The Mythical Man-Month Essays on Software Engineering*, Reading, MA: Addison-Wesley, 1982.

[9] P. S. Buckley, *Techniques of Process Control*, New York: John Wiley & Sons, 1964.

[10] A. Callender, D. R. Hartree, and A. Porter, "Time-Log in a Control System," *Philosophical Transactions of the Royal Society of London*, vol. 235, pp. 415–444, 1935.

[11] D. P. Campbell, *Process Dynamics*, New York: John Wiley & Sons, 1958.

[12] P. E. A. Cowley, "Pilot Plant Puts DDC to the Test," *Cont. Engin.*, vol. 13, pp. 53–56, 1966.

[13] R. H. Crowther, J. E. Pitrak, and E. N. Ply, "Computer Control at American Oil," *Chem. Eng. Progress*, vol. 57, pp. 39–43, 1961.

[14] DOD, *Reference Manual for the Ada Programming Language*, Proposed Standard Document, United States Department of Defense, 1980.

[15] DOD, *Strategy for a DOD Software Initiative*, United States Department of Defense, Oct. 1982.

[16] D. P. Eckman, *Automatic Process Control*, New York: John Wiley & Sons, 1962.

[17] Å. Ekström, "Integrated Computer Control of a Paper Machine—System Summary," Report TP 18.169, IBM Nordic Laboratory, Lidingö, Sweden.

[18] A. S. Foss, "Critique of Chemical Process Control Theory," *Amer. Inst. Chem. Eng. J.*, vol. 19, pp. 209–214, 1973.

[19] T. J. Harrison, *Minicomputers in Industrial Control*, Pittsburgh, PA: Instrument Society of America, 1978.

[20] M. Henze, *Revamping of a Tandem Old Strip Mill*, Report Production and Process Control Systems, ASEA Västerås, 1983.

[21] IBM Reference Manual, 1720 Control System, Order No. A26-5512, available through IBM branch offices.

[22] A. Ivanoff, "Theoretical Foundations of the Automatic Regulation of Temperature," *J. Institute of Fuel*, vol. 7, pp. 117–130, 1934.

[23] J. M. Lane, "Digital Computer Control of a Catalytic Reforming Unit," *ISA Trans.*, vol. 1, pp. 291–296, 1962.

[24] E. W. Martin, "Strategy for a DOD Software Initiative Computer," vol. 16, pp. 52–58, 1983.

[25] C. E. Mason, "Science of Automatic Control in Refining I-IV," *World Petroleum*, June–Sept. 1933.

[26] O. Mayr, *Zur Fruhgeschichte der techni-*

schen Regelungen. Oldenbourg, Munchen, 1969.

[27] J. McMillan, "Five Years in the Doldrums," *Control*, pp. 512–515, 1966.

[28] S. D. Mitereff, "Principles Underlying the Rational Solution of Automatic-Control Problems," *Trans. ASME*, vol. 57, pp. 153–159, 1935; particularly the discussion, vol. 58, pp. 55–65, 1936.

[29] Y. Mizuno, "Software Quality Improvements," *Computer*, vol. 16, pp. 66–72, 1983.

[30] J. F. Moore and N. F. Gardner, "Process Control in the 1970s," *Chemical Engin.*, pp. 94–106, June 1969.

[31] G. Moore, "VLSI: Some Fundamental Challenges," *IEEE Spectrum*, pp. 30–37, April 1979.

[32] B. Petterson, "Production Control of a Complex Integrated Pulp and Paper Mill," *Tappi*, vol. 52, pp. 2155–2159, 1969.

[33] H. Ruckert, *Case History II, The Bleached Kraft Pulp Mill at Skutskär an Established and Extended Mill*, 1983.

[34] T. M. Stout, "Computer Control of Butane Isomerization," *ISA Journal*, vol. 6, pp. 98–103, 1959.

[35] A. Thompson, "Operating Experience with Direct Digital Control," *Proc. First IFAC/FIP Conference on Applications of Digital Computers to Process Control*, Stockholm, Sept. 1964.

[36] A. Toffler, *The Third Wave*, New York: Bantam, 1981.

[37] D. Wayne, (editor), *Proc. 1983 Tappi Process Simulation Seminar*, Georgia World Congress Center, Atlanta, GA, 1983.

[38] D. Wayne, "How to Implement a Production Management System Through Integrated Simulation and Will-Wide Control," 1983 Tappi Process Simulation Seminar, Atlanta, GA, March 1983.

[39] T. J. Williams, "Direct Digital Control Computers — A Coming Revolution in Process Control," *Proceedings Texas A&M 19th Annual Symposium on Instrumentation for the Process Industries*, College Station, TX, pp. 70–81, Jan. 1964.

[40] T. J. Williams, "Computers and Process Control," *Industrial and Engineering Chemistry*, vol. 62, pp. 28–40, 1970.

[41] G. H. von Wright, *Humanismen som livshållning (Humanism as a Way of Life)*, in Swedish, Borgå: Söderströms & Co. 1978.

[42] J. G. Ziegler and N. B. Nichols, "Optimum Settings for Automatic Controllers," *Trans. ASME 65*, pp. 433–444, 1943.

Karl Johan Åström was born in Östersund, Sweden, in 1934. He was educated at the Royal Institute of Technology (KTH) in Stockholm where he received the M.S. degree in 1957 and the Ph.D. degree in 1960. He worked for the KTH, the Research Institute of National Defense in Stockholm, the IBM Nordic Laboratory, and the IBM Research Laboratories at Yorktown Heights and San Jose. In 1965, he was appointed Professor of Automatic Control at Lund Institute of Technology. His main research areas are stochastic control, system identification, adaptive control, and computer control. He has published three books, *Reglerteori* (in Swedish), *Introduction to Stochastic Control Theory* (translated into Japanese, Russian and Chinese), and *Computer Controlled Systems* (with B. Wittenmark), and many papers. He has been responsible for building the Department of Automatic Control at Lund where he has supervised 25 Ph.D. theses and numerous M.S. theses. He is an Associate Editor for *Automatica* and many other journals and is a Fellow of IEEE, a member of the Swedish Academy of Engineering Sciences (IVA), and a member of the IFAC Council.