LUND UNIVERSITY

Case cancellation or KP-extraction?

Holmer, Arthur

1997

Link to publication

Citation for published version (APA):
Holmer, A. (1997). *Case cancellation or KP-extraction?* (Working Papers, Lund University, Dept. of Linguistics; Vol. 46). http://www.ling.lu.se/disseminations/pdf/46/Holmer.pdf

Total number of authors:
1

General rights
Unless other specific re-use rights are stated the following general rights apply:
Copyright and moral rights for the publications made accessible in the public portal are retained by the authors and/or other copyright owners and it is a condition of accessing publications that users recognise and abide by the legal requirements associated with these rights.
• Users may download and print one copy of any publication from the public portal for the purpose of private study or research.
• You may not further distribute the material or use it for any profit-making activity or commercial gain
• You may freely distribute the URL identifying the publication in the public portal

Read more about Creative commons licenses: https://creativecommons.org/licenses/

Take down policy
If you believe that this document breaches copyright please contact us providing details, and we will remove access to the work immediately and investigate your claim.

LUND UNIVERSITY

PO Box 117
221 00 Lund
+46 46-222 00 00

Lund University, Dept. of Linguistics
Working Papers 46 (1997), 153–166

Case cancellation or KP-extraction?

Arthur Holmer[1]

1 Introduction

The purpose of this paper is to show how it is possible to derive the advantages of the subject choice view of passivization (Holmer 1996a, 1996b) without necessarily resorting to the somewhat unconventional (and, in traditional terms, illicit) concept of Case Cancellation. Instead, I adopt two proposals made by Bittner & Hale 1996 with respect to Case-marking and the structure of Case-marked nominals, which together neatly capture the intuitive difference between nominative and non-nominative Case, and show that the Case Cancellation I have proposed in earlier work is, in fact, only apparent. Moreover, it is exactly this structural difference between nominative and other cases which makes the subject choice account of passivization functionally straightforward, structurally motivated and, last, but by no means least, compatible with the traditional view that chains may not be doubly Case-marked.

At this stage an important point should be made: this analysis is not made in the spirit of Bittner & Hale 1996, it does not follow the general direction they suggest, and it makes no reference to many of the concepts they incorporate in their model. I am following the general line in Holmer 1996a, 1996b. However, some of the suggestions I make here are directly influenced by concepts presented in Bittner & Hale.

1.1 Passivization and subject choice

The reader is referred to Holmer 1996a, b for a detailed account of the surface appearance of the Austronesian language Seediq spoken in Taiwan. The

[1]I gratefully acknowledge the assistance rendered by the David C. Lam Institute for East-West Studies, Hong Kong Baptist University and the Insitute of History and Philology, Academia Sinica, Taipei. I also wish to thank Chang Yung-li, Sheila Dooley-Collberg and Stanley Starosta for discussions and comments which have been of great help and inspiration. Naturally, I am most endebted to my Seediq informants: Temi Nawi, Rabe Tado, Pawan Torih, Walis Watan and Seta Iban. I also wish to thank Yen-Fen Dannenberg-Liu for her very helpful native intuitions about the Chinese data.

important point in this context is that the voice system in Seediq is of the type (commonly known as 'subject focus') where, in the normal case, both active and passive are equally transitive[2]. Thus, we have no evidence that voice in Seediq is inherently connected with any change in transitivity. In a passive voice, the subject is the Patient and has NOM Case, and the Agent is in ERG Case. In an active voice, the subject is the Agent and has NOM Case, whereas the Patient is in ACC. The Case realizations are visible on the verb as voices rather than as overt case markers, however.

Another important feature of the subject focus system is that there are three different passive forms: the choice of one of these passives depends on whether one wishes to make a direct object (PF – Patient Focus), a locative adjunct or partially affected patient (LF – Locative Focus) or an instrumental or benefactive adjunct (IF – Instrument Focus) into clause subject[3].

The subject choice suggestion capitalizes on the situation in Seediq and accounts for voice as a type of agreement morphology: it is the movement from a base-generated position to SpecIP (or whatever we choose to call subject position) which is basic, and the morphology on the verb reflects this via Spec-Head agreement, the purpose being to keep track of the syntactic function of each argument. On the other hand, both argument positions in VP are Case-marked (SpecVP gets ERG by government from I˚, and O gets ACC by government from V˚, cf. Holmer 1996a, b for a more complete discussion).

This implies that Case-marking is in a sense irrelevant to voice choice. Subject choice with an ensuing change in voice may take place regardless of Case-marking within VP. Moreover, we have clear indications from Seediq that SpecIP is also a Case position in this language (this position is open to arguments which can not be realized in their base-generation position[4]). Clear-

[2]This is in the normal case. There are examples, such as those shown by Chang 1996, where an intransitive (unergative) verb, when affixed with a passive morpheme, functions as a transitive. Thus, the grammatical subject of such a verb would be an oblique element, whereas the Agent would remain as an ergative argument. Note that I am referring to the usual meaning of 'transitivity', not to semantic transitivity such as that illustrated in Hopper & Thompson 1980, or the interpretation used in Lexicase theory (Starosta 1988, Starosta (to appear) and Starosta p.c.) where AF constructions are considered intransitive, with the object as an oblique (the term used in Lexicase is MNS 'means').

[3]It is possible to formalize the above semantic criteria in structural terms with a certain gain in exactness. I shall not address this problem here.

[4]For reasons of space, I do not repeat the argumentation leading to this conclusion in this paper. The reader is referred to Holmer 1996a and 1996b for a more detailed discussion. Briefly, however, a marginal NP (such as an instrument) may appear in SpecIP, cross-referenced by IF, whereas it may not appear in the position where it was base-generated (adjoined within some type of PP, perhaps). It can not be said, however, that it is IF in itself which causes SpecIP to have NOM Case exceptionally in this case, since IF can also cross-

ly, then, if we follow the traditional view that all Cases are equivalent, we have no way of avoiding the conclusion that an NP can move from one Case-marked position to another.

The original proposal in Holmer 1996a, 1996b was that when a Case-marked argument moves to SpecIP, its d-structure Case is, in effect, cancelled by the nominative Case in SpecIP, which in turn implies that a chain containing a DP in SpecIP and a trace in a Case-marked position is doubly Case-marked. Both of these suggestions are, in fact, illicit in standard versions of GB grammar. However, the data in Seediq points clearly in this direction.

Having gone on to show this, I further proposed that Case cancellation deriving from choice of a Case-marked nominal as subject is nothing restricted to Seediq, but that it occurs in all types of languages, and that it is this phenomenon which accounts for the detransitivization which we see both in passives in accusative languages and in anti-passives in a syntactically ergative language such as Dyirbal (cf. Dixon 1972, 1994).

This model allows for a unified base-generation of arguments within the clause (Agent in SpecVP and Patient as complement of V°), and at the same time explains both passivization in accusative languages, anti-passivization in (syntactically) ergative languages and Austronesian subject focus in terms of the purely functional question of subject choice and ensuing stranding of arguments in Case-less positions in syntactically ergative and accusative languages – thus neatly eliminating Burzio's 1986 generalization.

2. KP and DP

The problem with the above conclusion is that it involves cancellation of one Case by another, and that this is difficult to motivate independently. The type of case cancellation involved is that the NOM Case assumed to be present in SpecIP is able to cancel the Case assigned an argument at d-structure. It is interesting to note that there are no examples otherwise of one Case cancelling another.

Moreover, it is an additional problem that it is always an unmarked Case which cancels a marked Case, never vice versa. It might be easier to imagine that a marked Case could be added onto an unmarked nominal, or that a marked Case could in a sense overshadow a feature which is unmarked so as to replace it. It is exactly the opposite which occurs, however. The most salient

reference subjects which have been base-generated in Case-marked positions, notably the patient of a causative transitive verb ('I invited the man to drink *the wine*').

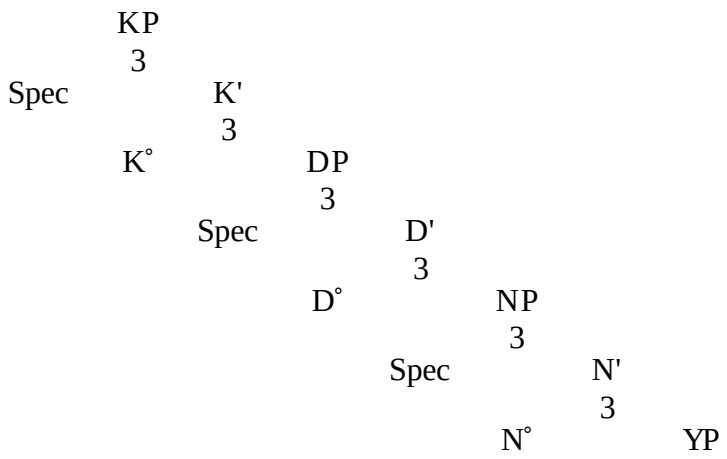

Figure 1. KP structure.

feature of case cancellation seems to be that it is the markedness itself which is removed, rather than replaced by something else.

This asymmetry makes it likely that there are other aspects involved as well. In fact, the central point in this discussion is therefore that it may not be a question of pure Case cancellation *per se*. The apparent cancellation may have something specifically to do with the status of NOM as opposed to other structural Cases.

Bittner & Hale 1996 propose what appears to be the solution. In this article, they suggest that a nominal with a marked Case is in fact a KP (i.e. a Case-phrase) where K° (Case) is the head. This is clearly in line with the idea that the highest functional projection within a phrase is relevant for its syntactic function. In other words, an ACC-marked K° is the syntactically most relevant element in an object nominal, since it determines its function as an object. The structure of a KP is illustrated in figure 1 (on an SVO tree).

The crucial part in their suggestion, however, is that this holds for a nominal in a structurally marked Case, but not for an element in an unmarked Case such as NOM (Bittner & Hale 1996:5-6). Thus, a nominal with Nominative Case is a DP (or, in languages lacking the category D, an NP). It is this asymmetry which is capable of capturing exactly the phenomenon which I have referred to as Case Cancellation.

3. KP and the revised Subject Choice model

3.1 The suggestion

Thus, I follow Bittner & Hale 1996 in suggesting that a nominal in a marked Case is a KP, and that a nominatively Case-marked nominal is a DP. I adopt this suggestion directly into the model I proposed in Holmer 1996a, b, but I

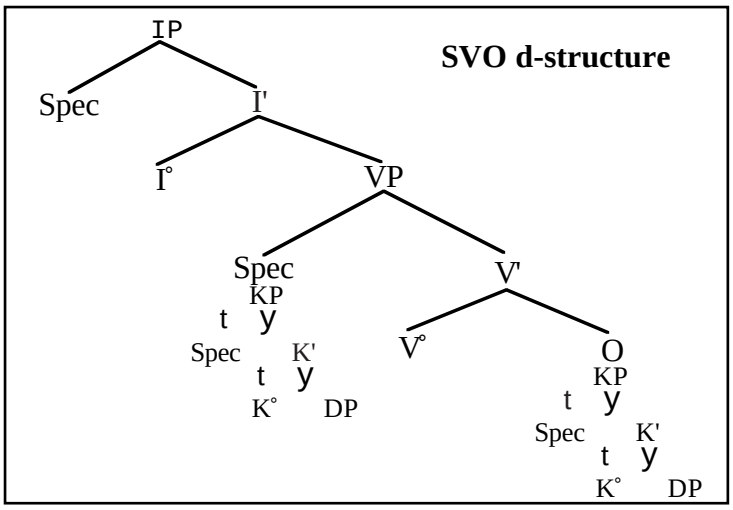

Figure 2. Base-generation of arguments.

do not make use of the other mechanisms presented by Bittner & Hale, since these are primarily relevant for a model which treats voice as a change in transitivity rather than as subject choice. As a result I propose the d-structure illustrated in figure 2 (in an SVO structure).

Base-generation of arguments takes place within VP, as in the classical models of GB, e.g. Guilfoyle, Hung & Travis 1992, Baker 1996, etc. An Agent is base-generated in SpecVP, a Patient in [DP, V'] (henceforth O for *Object*). I further claim that both the Agent and the Patient are base-generated as KP's. No argument is base-generated as a DP.

During move-α, SpecIP[5] must be filled (or must get a referent) to satisfy the Extended Projection Principle (Chomsky 1986), which states that there must be an element outside of VP which antecedent-governs VP at s-structure[6]. I further suggest that the choice of which argument is to become subject is determined by discourse – theoretically, any nominal element may move to SpecIP, as long as it can c-command its trace and as long as its syntactic function can be identified (by Voice). Therefore, the object of an adverbial PP may not be made subject in English (1a), although a corresponding argument may in Seediq (1b), which has a much richer voice morphology, capable of identifying the original function of the subject.

(1) a. *That bowl was eaten food in.

[5]I have referred to this position as SpecAgrP in Holmer 1996a, as SpecIP in 1996b. Which name we choose depends largely on how we view INFL. I have chosen not to address the question of the structure of INFL in this paper. However, I would suggest that it is the lowest Spec position within a split-INFL structure which is relevant for voice choice, be it VoiceP (Chang 1997), PassP (Ouhalla 1991) or perhaps even AspP. It is possible, however, that there may be parametric variation involved as well.

[6]Bittner & Hale satisfy the EPP by claiming that the Agent is a distinguished adjunct and is adjoined to VP, thus governing it. Since, however, it is sufficient that it be satisfied at s-structure, I take it to be the driving force behind movement to SpecIP (since Case is no longer relevant in my model).

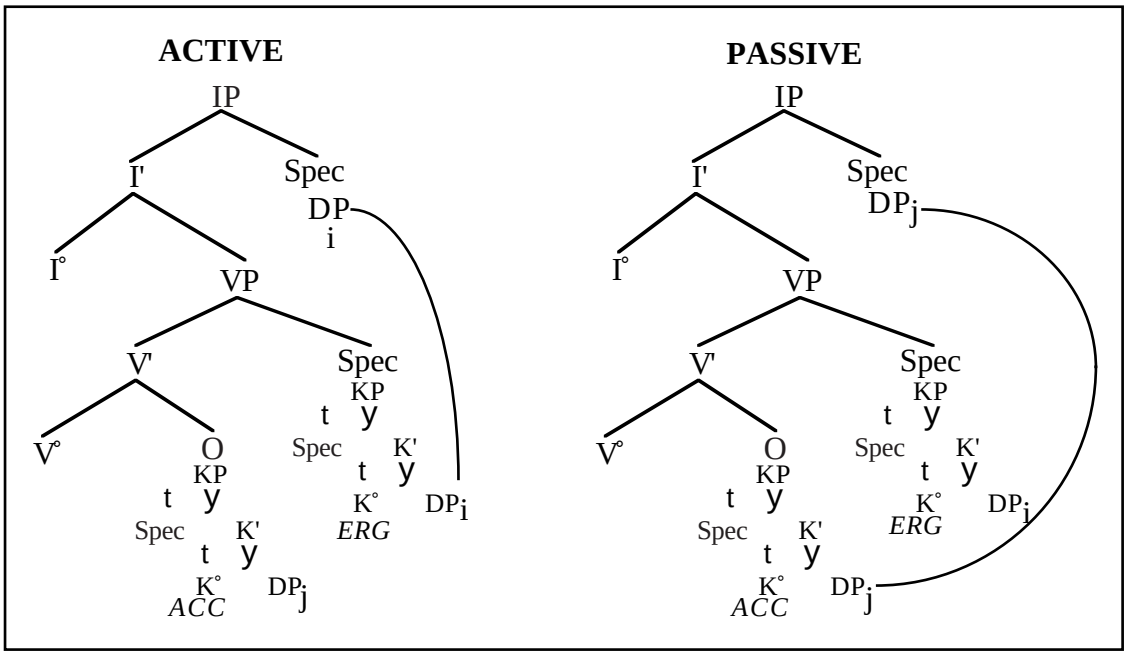

Figure 3. Subject choice in Seediq.

b. Pnuqan daha damac pngerax kiya.
eat-LF[7]-PRET 3pG food bowl that
'That bowl was eaten food in by them.'

We recall that a NOM-marked element (i.e. the subject) in SpecIP is a DP and not a KP. In other words, we must find a way for exactly one element to be base-generated as a KP and move to SpecIP as a DP (whereas other KP's remain as KP's). The solution is actually entirely straightforward.

What I suggest is that subject choice crucially does not involve movement of the base-generated KP to SpecIP; rather, it involves extracting the DP from the KP and moving only the DP to SpecIP, leaving the rest of the KP in base-generated position (figure 3, illustrated on a typical Seediq VOS structure, where both SpecVP and O have Case).

Thus, if we adopt the KP model, the problem of Case Cancellation is neatly eliminated. The DP which moves to SpecIP in either case (no matter which one it is, recall that subject choice is discourse-dependent) is not Case-marked, since a DP cannot receive a marked Case: ERG Case is assigned by I° to the KP in SpecVP and ACC Case is assigned by V° to the KP in O. The Case is realized in the K° head of each KP. The DP within each KP is not assigned any Case at all.

[7]LF = Locative Focus, the voice used to identify subjects which are base-generated as locative arguments or imperfective patients.

Thus, when the DP is selected and moved to SpecIP, it has no Case which must be cancelled. It is simply licensed as a NOM subject in SpecIP (it need be of no immediate concern to us here whether NOM is assigned by Spec-Head agreement with I° or under government by C°, our choice depends on how morphologically ergative languages are best analysed in a Subject Choice perspective), effectively leaving the KP where it originated stranded in its d-structure position.

Our next concern is to avoid the phonetic realization of the Case which has been left stranded in K°. This problem is actually solved for us by Bittner & Hale (p. 7): "At S-Structure the empty K is realized by an overt Case marker provided that it has an overt DP" (and provided, of course, that the Case in question does, in fact, have a phonetic realization). Thus, at s-structure, if the DP is still within the KP, K° may be realized. If the DP has moved out of KP, K° may not be realized.

3.2 The Western perspective

The argumentation so far has been concerned only with the application of this model to Seediq, where, as we recall, the Agent receives ERG at d-structure and the Patient receives ACC at d-structure. In English, on the other hand (as well as in most other Western European languages, with the notable exception of Basque), only O can be Case-marked at d-structure. Thus, subject choice has direct consequences for the transitivity of the clause.

Given, then, that only O receives any direct Case-marking from V°, it might be considered natural to assume that the Agent is base-generated as a DP, since it is usually only ever seen in SpecIP, where it is evidently (assuming the present model) a DP. However, there would be two distinct disadvantages with this view:

(a) we would lose the generalization about base-generation of arguments, both cross-linguistically (i.e. that an Agent is evidently a KP is an ergative language and a subject-focus language) and within one language (an O is a KP in an accusative language) and

(b) if the Agent is realized in a *by*-phrase in a passive, we would have problems explaining how a DP Agent can be Case-marked by a preposition. If, on the other hand, it is a KP, we expect it to be able to receive Case-marking from either V° or P°. The fact that it receives no Case from I° is simply due to the fact that I° in English cannot assign ERG.

Thus, I suggest that both the Agent and Patient are always base-generated as KP's (i.e. exactly as in Seediq), and that, in an active, the DP within the

Agent KP raises to SpecIP to become subject, whereas the DP within the Object KP remains in its base-generated position. So far, this is quite straightforward.

If, however, the Patient is chosen as subject, the DP within Object KP raises to SpecIP, and the DP within Agent KP remains stranded in base-generated position. However, since I° in English cannot assign ERG to SpecVP, the K° head within Agent KP is Case-less at s-structure. Thus, the Agent KP is effectively stranded in a Case-less position, and so must either be deleted or Artificially Case-Marked by a preposition.

This entails a minor rewording of the Case filter, namely that it is a KP which must be licensed by a Case-marker, not an NP.

(2) *KP if K° lacks Case at s-structure.

The next problem is to exclude a DP from any context where it is not Case-marked (in the traditional sense). Evidently, a DP is licensed if governed by K° or if in NOM Case. This can be expressed as follows:

(3) *DP unless: (a) governed by K° at s-structure OR
(b) assigned NOM[8] at s-structure

Of course, we can only expect DP to be licensed if the K° which governs it is licensed (cf. (2) above). A DP within a Case-less KP is thus also ungrammatical. Thus, we see that we are forced to replace the Case filter by two filters, which necessarily complicates the picture somewhat.

Note that if there is no Agent θ-role assigned by the verb, i.e. as the case is with an unaccusative verb like 'die' or 'fall', the movement is essentially the same as with a passive, but no passive morphology is realized on the verb, since there is no need to identify the function of the subject. Thus, passive morphology can be said to appear in I° (or the subsection of INFL responsible for voice) only when Patient movement to SpecIP crosses a θ-position.

To summarize, we see that if we make use of the assumption that arguments are base-generated as KP's, but that a NOM subject is never a KP, we can derive exactly the same advantages from the Subject Choice model as

[8]Again, I shall not deal with the specific details of NOM assignation here. For accusative, subject-focus and syntactically ergative languages it is clearly in SpecIP (or some kind of subject position). For morphological ergatives the situation is not so simple. It is even unclear whether ABSolutive in a morphologically ergative language corresponds to NOM at all. According to Bittner & Hale it does; according to Laka 1993 it corresponds to ACC. If ABS is NOM, it should be assigned under transparency to C° (Bittner & Hale 1996:21-26). The question is then how to analyse situations where ABS appears in non-finite environments. In Basque, neither ERG not ABS appear to correspond in any obvious way to NOM, since both can appear in non-finite environments.

previously, without ever having to assume that Case is in any way deleted or destroyed in the process. In the following section I shall examine some points where it seems that the KP model gives us extra leverage when compared with the simple DP model.

4. Transitive passives

4.1 Chinese data

It is a well-known problem for the traditional GB interpretation of passivization that there are languages where a passive verb does not lose its ability to Case-mark an object. Norwegian is one of these languages (cf. Hestvik 1986). Mandarin Chinese is another.

In Mandarin Chinese, passivization implies basically that something other than the agent appears as clause subject: it may be the patient of the verb (4a) or an argument standing in a particular relation to the patient[9], usually a possessor of the patient (4b,c). The entire patient, including the possessor, can also appear as a clause subject (4d). If it is not the patient itself which appears as subject (as in 4a), object position is still occupied by the patient (as in (4b,c)).

(4) a. Zhāngsān bèi Lǐsì shā-le.
PN BEI PN kill-PRET[10]
'Zhangsan was killed by Lisi.'

[9]There is a third type of argument which can be made subject in Chinese passivization: an oblique argument which is somehow affected by the action. I shall not address these here, since here I am concerned with partial extraction from patient position. This would not, however, affect the basic analysis, given that voice in this model is interpreted as reflecting movement to SpecIP rather than affecting the Case-marking capacity of V°.

[10]I have glossed the Chinese perfective/preterite particle *le* as PRET reflecting its most common interpretation (and its only interpretation in isolation). However, nothing hinges on this in this context.

b. Zhāngsān bèi Lǐsì tōu-le qián.
PN BEI PN steal-PRET money
'Zhangsan had money stolen from him by Lisi.'

c. Júzi bèi Lǐsì bō-le pí.
mandarine BEI PN peel-PRET skin
'The mandarine had its skin peeled by Lisi.' /
'The mandarine was peeled by Lisi.'

d. Júzi de pí bèi Lǐsì bō-le.
mandarine POSS skin BEI PN peel-PRET
'The mandarine's skin peeled by Lisi.' /
'The mandarine was peeled by Lisi.'

The actives from which (4a-d) are derived are illustrated below for reference (5a-c); both (4c) and (4d) are derived from (5c). Passivization is thus basically performed by moving a non-Agent element to subject position and placing the passivization marker *bèi* before the Agent. There are other types of passive which dispense with both *bèi* and the Agent, but I shall not address them here, since they are much more restricted in use (being difficult to distinguish formally from actives).

(5) a. Lǐsì shā-le Zhāngsān.
PN kill-PRET PN
'Lisi killed Zhangsan.'

b. Lǐsì tōu-le Zhāngsān de qián.
PN steal-PRET PN POSS money
'Lisi stole Zhangsan's money.'

c. Lǐsì bō-le júzi de pí.
PN peel-PRET mandarine POSS skin
'Lisi peeled the skin of the mandarine.'

The derivation of (4a) from (5a) is entirely straightforward: *Zhāngsān* is moved to subject position and O position is thus emptied. This example is consistent with the case absorption model as well as with the subject choice model – according to the revised subject choice KP model, the subject DP is extracted from the Object KP.

The derivation of (4b,c) from (5b,c) is more complex, however. Here only a subsection of the material in O is moved to subject position, while the rest remains in O. Only the possessor is moved from O to SpecIP.

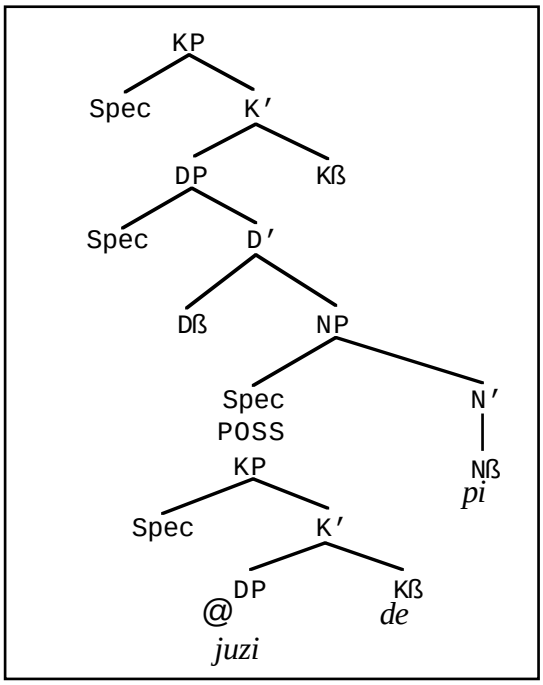

Figure 4. KP analysis of *júzi de pí* ‘the peel of the mandarine’.

4.2 KP analysis

Before analysing what happens in this type of passives, we must illustrate the original structure within the object KP. I follow Tang 1990 in base-generating the possessor in SpecNP, but I do not, for reasons of space, include here the entire structure she proposes. Instead I include our KP projection[11]. Moreover, I take the possessor (adjectival, relative, etc.) particle *de* to be in K° – this should not, however, necessarily be taken to imply that it is a case ending. Instead, I suggest that it occupies the highest head position of whatever phrase serves to modify an NP, be it a possessor phrase, an adjectival phrase or a relative clause. In general, then, K° defines the function of the DP it governs, in this case as a possessor[12].

Assuming the structure in figure 4, it is quite clear what happens. One DP from within the Object KP is moved to subject position. Since O contains two DP’s, either one may be chosen. If the higher DP is chosen, this involves emptying of the entire complement position of KP, and corresponds exactly to

[11]Which of course should not be confused with Tang’s KP (‘klassifier phrase’), also a necessary category, but irrelevant in this discussion.

[12]This does not actually disagree with Tang’s 1990 proposal. She attributes the fact that a possessor may cooccur with a demonstrative in Chinese but not in English to an analysis which suggests that English possessive *’s* is located in D° of the matrix DP (i.e. where a demonstrative would appear) whereas Chinese *de* is directly adjoined to the possessor DP, in SpecNP of the matrix DP. In a KP analysis, it is natural to identify this position with K°, especially since *de* must be assumed to be a functional head.

what we have seen for passives in Seediq and English. If the lower DP is chosen, it is the possessor of the patient which becomes subject. Given a KP analysis, there is nothing unusual about extracting a DP from object position.

The next relevant question is what remains within O. The KP treatment again affords a straightforward account. Assuming that the higher DP is extracted from KP, what remains is basically an empty KP with no complement. The K° has the value ACC, but since DP is empty, this Case is not realized (phonetically, it has no realization in Chinese anyway). The DP which raises is Case-less in itself and is thus eligible for NOM Case in SpecIP.

If, on the other hand, we choose the lower DP, it is extracted from the KP in SpecNP, and a substantial part of the structure is left stranded in O. The phonetic material which is left in O should be *de* in K° within SpecNP and *pí* within N°. As we recall, however, if K° has no overt complement, it may not be realized, so the *de* in K° is not realized. Therefore, all that is left of the original KP in O is the single N° *pí* 'skin'.

The remaining N° can be accompanied by numerals (6a) or adjectives (6b). However, it can never be accompanied by a possessor phrase (even in the guise of a resumptive pronoun, (6c)), showing that the possessor phrase has apparently left a trace in SpecNP.

(6) a. Zhāngsān bèi Lǐsì tōu-le liǎng-zhī gǒu.
PN BEI PN steal-PRET two-CLF dog
'Zhangsan had two dogs stolen from him by Lisi.'

b. Zhāngsān bèi Lǐsì tōu-le yì-běn hěn hǎo de shū.
PN BEI PN steal-PRET one-CLF very good DE book
'Zhangsan had a very good book stolen from him by Lisi.'

c. Zhāngsān bèi Lǐsì tōu-le (*tāde) qián.
PN BEI PN steal-PRET his money
'Zhangsan had (*his) money stolen from him by Lisi.'

This type of DP extraction is in no way unexpected in the KP model, since movement to subject position always entails extraction of a DP out of a KP: if we, as we did for Chinese, extend this type of extraction to DP's within possessor KP's, it is still the same process. In the DP-based model, on the other hand, we have no precedent for extraction of a DP from SpecNP, although we must conclude from the data that this is what actually happens.

Thus the KP-model helps us to achieve greater uniformity in our treatment of Chinese passives[13].

5. Summary and conclusion

The suggestions in this paper are not particularly controversial. I have suggested that if we follow Bittner & Hale 1996 in proposing that all non-NOM arguments are KP's rather than DP's, we can reconcile the subject choice view of voice with traditional Case theory in that it no longer requires the deletion or replacement of Case-marking when an argument moves to SpecIP. Thus, it is the most important consequence of this paper to show that Subject Choice as a model is not incompatible with standard Case theory.

In section 4 I have also discussed one other advantage of the KP model, namely that it allows a uniform analysis of two types of Chinese passive, namely those that move the whole patient constitutent to subject position, and those that strand part of the patient constituent in object position. Both are shown to be DP-extraction from a KP. While this latter point does not constitute clear evidence in favour of the KP model, it does give a precedent for DP extraction from within object position, showing that this type of movement can not be excluded *a priori*. What the KP model does is basically to generalize this type of movement to all argument movements, with increased cross-linguistic symmetry as a result.

References

Baker, Mark. 1996. *The polysynthesis parameter*. Oxford University Press.

Bittner, Maria & Ken Hale. 1996. 'The structural determination of case and agreement'. *Linguistic Inquiry* 27:1, 1-68.

Burzio, Luigi. 1986. *Italian syntax*. Dordrecht: Foris.

Chang Yung-li. 1996. 'Agent/non-agent focus asymmetries in Seediq'. In Yin Yuen-Mei, Yang I-li, Mo Chien-ching & Chan Hui-chen (eds), *Proceedings of the Fifth International Symposium on Chinese Languages and Linguistics*, 81-100. Mucha: National Chengchih University.

Chang Yung-li. 1997. *Voice, case and agreement in Seediq and Kavalan*. PhD thesis (to appear). National Tsing Hua University, Taiwan.

Chomsky, Noam. 1986. *Barriers*. Cambridge: MIT Press.

[13]The traditional GB interpretation of passivization as Case-absorption cannot explain how any material can be left in O, since it would not be Case-marked. If passivization is Case-absorption, Chinese passive cannot be considered to be a 'passive' in the sense that it shares a common base-generation with the active, but rather a base-generated construction.

Dixon, Robert M. W. 1972. *The Dyirbal language of North Queensland*. Cambridge: Cambridge University Press.

Dixon, Robert M. W. 1994. *Ergativity*. Cambridge: Cambridge University Press.

Guilfoyle, Eithne, Henrietta Hung & Lisa Travis. 1992. 'SPEC of IP and SPEC of VP: two subjects in Austronesian languages'. *Natural Language and Linguistic Theory* 10, 373-414.

Hestvik, Arild. 1986. 'Case theory and Norwegian impersonal constructions: a case against parameters'. *Nordic Journal of Linguistics* 9, 181-197.

Holmer, Arthur. 1996a. *A parametric grammar of Seediq*. (Travaux de l'institut de linguistique de Lund 30). Lund: Lund University Press.

Holmer, Arthur. 1996b. 'Passive typology – the Case link'. *Working Papers (Dept. of Linguistics, Lund University)* 45, 63-78.

Hopper, Paul & Sandra Thompson. 1980. 'Transitivity in grammar and discourse'. *Language* 56, 251-299.

Laka, Itziar. 1993. 'Unergatives that assign ergative, unaccusatives that assign accusative'. *MIT Working papers in linguistics* 18 (=*Papers on case and agreement* I), 149 - 172.

Ouhalla, Jamal. 1991. *Functional categories and parametric variation*. London: Routledge.

Starosta, Stanley. 1988. *The case for lexicase: an outline of lexicase grammatical theory*. London: Pinter Publishers.

Starosta, Stanley. to appear. 'Ergativity, transitivity and clitic coreference in four Western Austronesian languages'. ms.

Tang, Chih-Chen Jane. 1990. 'A note on the DP analysis of the Chinese noun phrase'. *Linguistics* 28, 337-354.