LUND UNIVERSITY

LQG Control Over a Markov Communication Network

Bernhardsson, Bo; Nilsson, Johan

Published in:
Proceedings of the

1997

Link to publication

Citation for published version (APA):
Bernhardsson, B., & Nilsson, J. (1997). LQG Control Over a Markov Communication Network. In *Proceedings of the* http://www.control.lth.se/documents/1997/nil+ber97cdc.pdf

Total number of authors:
2

General rights
Unless other specific re-use rights are stated the following general rights apply:
Copyright and moral rights for the publications made accessible in the public portal are retained by the authors and/or other copyright owners and it is a condition of accessing publications that users recognise and abide by the legal requirements associated with these rights.
• Users may download and print one copy of any publication from the public portal for the purpose of private study or research.
• You may not further distribute the material or use it for any profit-making activity or commercial gain
• You may freely distribute the URL identifying the publication in the public portal

Read more about Creative commons licenses: https://creativecommons.org/licenses/

Take down policy
If you believe that this document breaches copyright please contact us providing details, and we will remove access to the work immediately and investigate your claim.

LUND UNIVERSITY

PO Box 117
221 00 Lund
+46 46-222 00 00

LQG Control Over a Markov Communication Network*

Johan Nilsson and Bo Bernhardsson

Department of Automatic Control
Lund Institute of Technology
Box 118, S-221 00 Lund, Sweden
johan@control.lth.se

Abstract

We formulate and solve a control problem where data are sent over a communication network that introduces random time delays. Past time delays are assumed known by the use of timestamps and the probability distribution of future delays are modeled with a Markov chain with continuous observation densities. We generalize previous results on LQG control of jump linear systems to cover this situation.

1. Introduction

Modern control systems often use a communication network to send measurement and control signals between nodes. A common communication network reduces the cost of cabling, and offers modularity and flexibility in systems design. Possible alternatives include CAN, Profibus, FIP, Ethernet and ATM. Communication delays in such networks can vary in a random fashion. The reason for this can be e.g. interrupt driven events, data dependent computation times, use of dynamic schedules, collisions or varying network load.

In previous papers we have addressed the problem of analysis of given control laws using Markov chain theory. In this contribution we present the optimal linear quadratic controller. This is a generalization of old results in jump linear systems and the results in Nilsson (1996) and Nilsson *et al.* (1996) where the LQG-problem is solved with the assumption that the time delays are independent from sample to sample. It was also shown how timestamps can be used in the LQG-controller. In Nilsson and Bernhardsson (1996) it is shown how to analyze a given controller when the delays are modeled using the Markov chain setup in Section 1.2.

1.1 Jump Linear Systems

Jump linear systems can in discrete time be written as

$$x_{k+1} = A(r_k)x_k + B(r_k)u_k,$$

where $A(r_k)$ and $B(r_k)$ are functions of the state r_k in a Markov chain. Jump linear systems was introduced in the 60's by Krasovskii and Lidskii (1961). The LQ-problem was solved by Sworder (1969). Since then much work have been done for Jump linear systems, see Ji *et al.* (1991) for a survey. Recent work include solutions in terms of Linear Matrix Inequalities, see e.g. Rami and Ghaoui (1997). In our setup each Markov state corresponds to a given continuous probability distribution of the time delays. This is a popular, efficient model class in e.g. speech recognition, see the review paper Rabiner (1989) but has to our knowledge not been used in the control field of jump linear systems.

The resulting controller is of a form tractable for fast implementations. It is a linear feedback with gain scheduling on last measured time delay which can be precomputed in a one-parameter table. A time-varying Kalman filter is also needed, but the special system structure makes an efficient implementation possible so that no Riccati equations have to be solved on-line. It is assumed that the state of the Markov chain is known at time of control. If the state is unknown it can be estimated using standard methods from Hidden Markov Models, see Elliot *et al.* (1995), but the form of the optimal controller is not known.

1.2 Models of Real Time Communication Networks

We will study a model that captures the dependency between successive time delays. This gives a quite flexible model class for which it is possible to derive analytical results of optimal controllers, the separation principle holds and which allows model identification using well established methods from e.g. speech recognition. It is important to keep the number, s, of Markov states low. The reason for this is

* This work is supported by NUTEK, Swedish National Board for Industrial and Technical Development, Project Dicosmos, 93-3485.

that the number of transition probabilities that must be identified grows like s^2 and the computational time can grow like s^6.

EXAMPLE 1—SIMPLE NETWORK MODEL
To get a simple network model we can let the network have three states, one for low network load, one for medium network load, and one for high network load. In Figure 1 the transitions between different states in the communication network are modeled with a Markov chain. Together with every state in

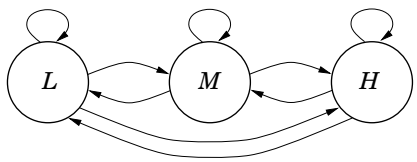

Figure 1 An example of a Markov chain modeling the state in a communication network. L is the state for low network load, M the state for medium network load, and H is the state for high network load. The arrows show possible transitions in the system.

the Markov chain we have a corresponding delay distribution modeling the delay for that network state. These distributions could typically look like the probabilistic distributions in Figure 2. □

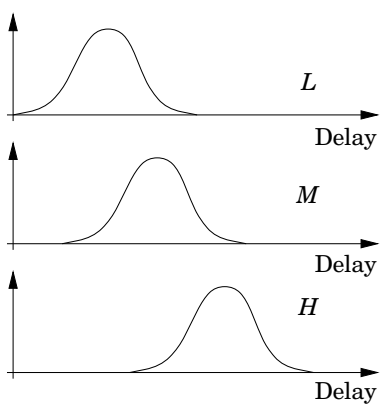

Figure 2 The delay distributions corresponding to the states of the Markov chain in Figure 1. Here L is the state for low network load, M the state for medium network load, and H is the state for high network load.

1.3 Timestamps and Clock Synchronization

The time delays are unknown in advance. At time k it is however possible to have information about old, or some of the old, time delays. For some networks (such as CAN) this information can be obtained directly, for others it can be achieved by so called timestamps. The idea is to adjoin the time of generation to each signal sent. The receiver can then compare the timestamp with his local clock and calculate the time delay. In some cases arrival information need to be sent back to the controller node. This requires reliable, synchronized clocks. The implementation of this is a research area in itself. For us it suffices to know that such synchronized clocks can under reasonable assumptions be implemented with low cost, see Mills (1991).

1.4 Control of Systems with Varying Time Delays

This section gives a short summary of previous work on systems with varying time delays, see the references for a thorough review.

Make the System Time-Invariant An approach to make the closed loop system time-invariant was presented in Luck and Ray (1990). The idea is to introduce buffers of the same length as the worst case delays at the controller and actuator node. The problem with this method is that it makes the delays longer than necessary, which can degrade control performance, see Nilsson *et al.* (1996).

Stochastic Approaches In Liou and Ray (1991) a setup with a time skew between the sensor and controller is studied. The resulting process description is

$$x_{k+1} = A_k x_k + B_k u_k,$$

where A_k and B_k are random due to the random delays. An LQ-optimal controller is presented, but it is not known whether the separation principle applies.

In Krtolica *et al.* (1994) a problem with the delays as a multiple of the sampling interval is studied. The number of sampling intervals the signals are delayed is modeled with a Markov chain. Necessary and sufficient conditions for zero-state mean-square exponential stability are derived.

2. Problem Formulation

In this section we will setup the network and plant model for the system in Figure 3. It is assumed that the sensor node is sampled regularly at a constant sampling period h. The measurement are sent via the network to the controller node. The controller node is assumed to be event driven, i.e. upon arrival to the controller node the control signal is calculated and sent via the network to the actuator node. The computation time, τ^c, is included in τ^{ca}. The actuator node is assumed to be event driven, i.e. the control signal will be used as soon as it arrives.

2.1 The Markov Communication Network

The network delays are collected in the variable τ_k, where τ_k is a random variable with probability distribution given by the state of a Markov chain.

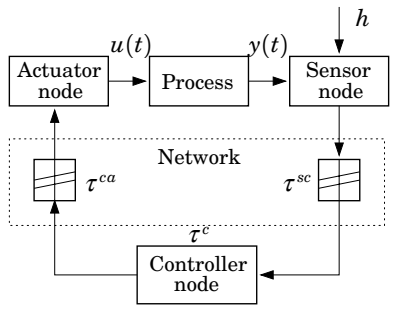

Figure 3 Distributed digital control system with induced delays, τ^{sc}, τ^{c} and τ^{ca}.

For instance τ_k can be a vector with the delays in the loop, i.e. $\tau_k = [\tau_k^{sc}, \tau_k^{ca}]^T$. The Markov chain has the state $r_k \in \{1, ..., s\}$ when τ_k is generated. The Markov chain then makes a transition between k and $k+1$. The transition matrix for the Markov chain is $Q = \{q_{ij}\}$, $i, j \in \{1, ..., s\}$, where

$$q_{ij} = P(r_{k+1} = j \mid r_k = i).$$

Introduce the Markov state probability

$$\pi_i(k) = P(r_k = i), \tag{1}$$

and the Markov state distribution vector

$$\pi(k) = [\pi_1(k) \quad \pi_2(k) \quad \dots \quad \pi_s(k)].$$

The probability distribution for r_k is given by the recursion

$$\begin{aligned} \pi(k+1) &= \pi(k)Q \\ \pi(0) &= \pi_0, \end{aligned}$$

where π_0 is the probability distribution for r_0.

2.2 Discrete Time System

The controlled process is assumed to be linear of the form

$$\frac{dx}{dt} = Ax(t) + Bu(t) + v(t), \tag{2}$$

where $x(t) \in R^n$, $u(t) \in R^m$, $v(t) \in R^n$ and where A and B are matrices of appropriate sizes. The controlled input is denoted by $u(t)$ and $v(t)$ is white noise with zero mean and covariance R_v. As a simplification we will assume that the delay from sensor to actuator always is less than the sampling period h, i.e. $\tau_k^{sc} + \tau_k^{ca} < h$. If this condition is not satisfied control signals may arrive at the actuator in corrupted order, which makes the analysis much harder. The influence from the network is collected in the variable τ_k, which has a probability distribution governed by an underlying Markov chain. Discretizing (2) in the sampling instants, see Åström and Wittenmark (1990), gives

$$x_{k+1} = \Phi x_k + \Gamma_0(\tau_k)u_k + \Gamma_1(\tau_k)u_{k-1} + v_k, \tag{3}$$

where

$$\Phi = e^{Ah}, \tag{4}$$

$$\Gamma_0(\tau_k^{sc}, \tau_k^{ca}) = \int_0^{h-\tau_k^{sc}-\tau_k^{ca}} e^{As} ds B, \tag{5}$$

$$\Gamma_1(\tau_k^{sc}, \tau_k^{ca}) = \int_{h-\tau_k^{sc}-\tau_k^{ca}}^{h} e^{As} ds B. \tag{6}$$

The output equation is

$$y_k = Cx_k + w_k, \tag{7}$$

where $y_k \in R^p$. The stochastic processes v_k and w_k are uncorrelated white noise with zero mean and covariance matrices R_1 and R_2 respectively.

Remark: The assumption that the delays from sensor to actuator are less than h can be changed to that the variation in the delays from sensor to controller are less than h. This generalization requires that the process state is extended with some old control signals.

2.3 Delay Distributions

Let Y_k denote the sigma algebra generated by the random components up to time k, i.e.

$$Y_k = \{e_0, ..., e_k, \tau_0, ..., \tau_k, r_0, ..., r_k\}.$$

The probability distribution of τ_k is assumed given by the state r_k of the Markov chain, i.e.

$$P(\tau_k \in F \mid Y_k) = P(\tau_k \in F \mid r_k)$$

for all measurable sets F. Markov chains with continuous observation densities will be used. Figure 2 shows the probability distribution

$$f_i(\tau_k) = P(\tau_k \mid r_k = i)$$

for $i = 1, 2, 3$ corresponding to low, medium, and high load on the network. Note that discrete observation densities are covered as a special case obtained by letting f_i be a sum of Dirac functions.

3. Optimal LQG Control — Markov Communication Networks

3.1 Optimal State Feedback

In this section we solve the control problem set up by the cost function

$$J_N = x_N^T Q_N x_N + \mathrm{E} \sum_{k=0}^{N-1} \begin{bmatrix} x_k \\ u_k \end{bmatrix}^T Q \begin{bmatrix} x_k \\ u_k \end{bmatrix}, \tag{8}$$

where

$$Q = \begin{bmatrix} Q_{11} & Q_{12} \\ Q_{12}^T & Q_{22} \end{bmatrix} \tag{9}$$

is symmetric, positive semi-definite, and Q_{22} is positive definite. The solution of this problem follows by the same technique as for the standard LQG problem. We have the following result:

THEOREM 1—OPTIMAL STATE FEEDBACK
Given the plant (3), with noise free measurement of the state vector x_k, i.e. $y_k = x_k$, and knowledge of the Markov state r_k. The control law that minimizes the cost function (8) is given by

$$u_k^* = -L_k(\tau_k^{sc}, r_k) \begin{bmatrix} x_k \\ u_{k-1}^* \end{bmatrix} \tag{10}$$

where, for $r_k = i$, $i = 1, \dots, s$, we have

$$\begin{aligned}
L_k(\tau_k^{sc}, i) =& (Q_{22} + \tilde{S}_i^{22}(k+1))^{-1} \cdot \\
& \cdot [\, Q_{12}^T + \tilde{S}_i^{21}(k+1) \quad \tilde{S}_i^{23}(k+1) \,] \\
\widetilde{S}_i(k+1) =& \mathop{\mathrm{E}}_{\tau_k^{ca}} \left(G^T \sum_{j=1}^{s} q_{ij} S_j(k+1) G \middle| \tau_k^{sc}, r_k = i \right) \\
G =& \begin{bmatrix} \Phi & \Gamma_0(\tau_k^{sc}, \tau_k^{ca}) & \Gamma_1(\tau_k^{sc}, \tau_k^{ca}) \\ 0 & I & 0 \end{bmatrix} \\
S_i(k) =& \mathop{\mathrm{E}}_{\tau_k^{sc}} \left(F_1^T Q F_1 + F_2^T \widetilde{S}_i(k+1) F_2 \middle| r_k = i \right) \\
F_1 =& \begin{bmatrix} I & 0 \\ -L(\tau_k^{sc}, r_k) \end{bmatrix} \\
F_2 =& \begin{bmatrix} I & 0 \\ -L(\tau_k^{sc}, r_k) & \\ 0 & I \end{bmatrix} \\
S_i(N) =& \begin{bmatrix} Q_N & 0 \\ 0 & 0 \end{bmatrix}.
\end{aligned}$$

$\tilde{S}_i^{ab}(k)$ is block (a,b) of the symmetric matrix $\tilde{S}_i(k)$, and Q_{ab} is block (a,b) of Q. □

Theorem 1 states that the optimal controller with full state information is a linear feedback depending on τ_k^{sc} and r_k

$$u_k = -L_k(\tau_k^{sc}, r_k) \begin{bmatrix} x_k \\ u_{k-1} \end{bmatrix}.$$

The equation involved in going from $S_j(k+1)$ to $S_i(k)$ is a coupled Riccati equation evolving backwards in time. Each step in this iteration will contain expectation calculations with respect to the stochastic variables τ_k^{sc} and τ_k^{ca}. Under reasonable assumptions, that we will not discuss here, a stationary value S_i^∞ of $S_i(k)$ can be found by iterating the stochastic Riccati equation. In practice a tabular for $L_\infty(\tau_k^{sc}, r_k)$ can then be calculated to get a control law on the form

$$u_k = -L(\tau_k^{sc}, r_k) \begin{bmatrix} x_k \\ u_{k-1} \end{bmatrix},$$

where $L(\tau_k^{sc}, r_k)$ is interpolated from the tabular values of $L_\infty(\tau_k^{sc}, r_k)$ in real-time.

EXAMPLE 2—VARIABLE DELAY LQ-DESIGN
Consider the closed loop system in Figure 4. Assume

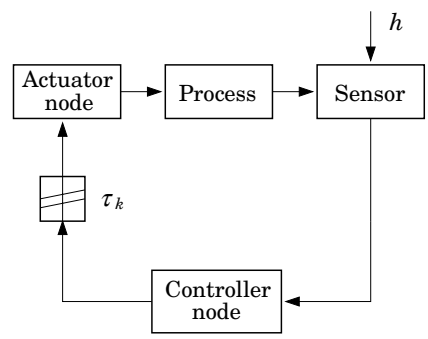

Figure 4 Digital control system with induced delay. The time-delay τ_k is determined by the state r_k of the Markov chain in Figure 5.

that the distribution of the communication delay τ_k from controller to actuator is given by the state r_k of a Markov chain. The Markov chain has two states, see Figure 5. The delay is

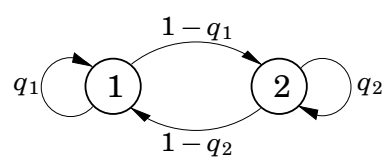

Figure 5 Markov chain with two states. State 1 corresponds to no delay, and state 2 corresponds to a time-delay in the interval $[d-a, d+a]$, see Equation (11).

$$\tau_k = \begin{cases} 0 & \text{if } r_k = 1, \\ \mathrm{rect}(d-a, d+a) & \text{if } r_k = 2, \end{cases} \tag{11}$$

where $\mathrm{rect}(d-a, d+a)$ denotes a uniform distribution on the interval $[d-a, d+a]$. It is also assumed that $d-a > 0$ and $d+a < h$. The controlled process is

$$\begin{cases} \dot{x} = x + u + e \\ y = x \end{cases}$$

Discretizing the process in the sampling instants determined by the sensor we get

$$x_{k+1} = \Phi x_k + \Gamma_0(\tau_k) u_k + \Gamma_1(\tau_k) u_{k-1} + \Gamma_e e_k$$

where

$$\begin{aligned}
\Phi &= e^h, \\
\Gamma_0(\tau_k) &= \begin{cases} e^h - 1, & \text{if } r_k = 1, \\ e^{h-\tau_k} - 1, & \text{if } r_k = 2. \end{cases} \\
\Gamma_1(\tau_k) &= \begin{cases} 0, & \text{if } r_k = 1, \\ e^{h-\tau_k}(e^{\tau_k} - 1), & \text{if } r_k = 2. \end{cases}
\end{aligned}$$

This is a system where we can use the derived synthesis method. The design is made by setting up a cost function to be minimized. Here we will use (8) with

$$Q_{11} = C^T C = 1 \qquad Q_{12} = 0 \qquad Q_{22} = 1.$$

As we in this example only have statistical information about the control delay when we calculate the control signal the controller will not be a function of τ_k. The optimal control will be

$$u_k = -L(r_k) \begin{bmatrix} x_k \\ u_{k-1} \end{bmatrix},$$

where r_k is the state of the Markov chain. In this example the Markov chain state is assumed known when the control signal is calculated. Solving the coupled Riccati equations in Theorem 1 gives $L(r_k)$. In Figure 6 the stationary LQ-cost is evaluated in the $q_1 - q_2$ space for $h = 0.3$, $d = 0.8h$ and $a = 0.1h$. From Figure 6 it can be observed that the most

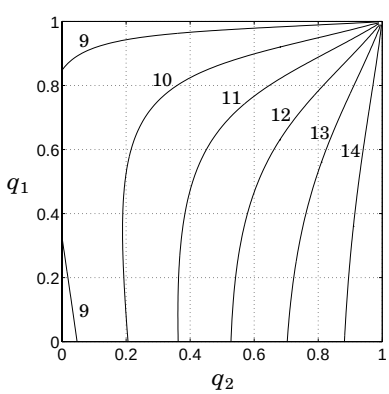

Figure 6 Level curves for the cost function in $q_1 - q_2$ space for the system in Example 2. The minimal value is 8.66, which is attained for $(q_1 = 1, q_2 = 0)$. The following level curves are $\{9, 10, 11, 12, 13, 14\}$.

advantageous cases for control is when q_1 is close to 1, and when both q_1 and q_2 are close to 0. In both these cases we have what can be called a "close to deterministic system". If q_1 is close to 1 we will be in the no delay state most of the time. In the other case where both q_1 and q_2 are small we will switch between state 1 and state 2 every sample, which could be characterized as a deterministic system with period 2 samples. □

3.2 Optimal State Estimate

It is often impossible to get full state information. A common solution to this is to construct a state estimate from the available data. In our setup there is the problem of the random time delays which enter (3) in a nonlinear fashion. The fact that the old time delays up to time $k-1$ are known at time k, however, allows the standard Kalman filter of the process state to be optimal. This is because x_k only depends on delays in the set $\{\tau_0^{sc}, ..., \tau_{k-1}^{sc}, \tau_0^{ca}, ..., \tau_{k-1}^{ca}\}$, as seen from (3).

When we are to calculate an estimate of x_k we assume that we know old values of the process output and process input. These can simply be stored in the controller for later use. We also assume that old values of the transfer delays for process output measurements and control signals are known. One way to achieve this is by using timestamps, see Section 1.3. Denote the information available when the control signal u_k is calculated by Y_k. This has the structure

$$\begin{aligned}
Y_k = \{&y_0, ..., y_k, u_0, ..., u_{k-1}, \tau_0^{sc}, ..., \tau_k^{sc}, \\
&\tau_0^{ca}, ..., \tau_{k-1}^{ca}, r_0, ..., r_k\}.
\end{aligned}$$

Notice that the sensor to controller delay τ^{sc} at time k and older are available, but the controller to actuator delays τ^{ca} are only known up to time $k-1$.

The state estimator that minimizes the error covariance is given in the following theorem.

THEOREM 2—OPTIMAL STATE ESTIMATE
Given the plant (3)–(7). The estimator

$$\hat{x}_{k|k} = \hat{x}_{k|k-1} + \overline{K}_k(y_k - C\hat{x}_{k|k-1}) \tag{12}$$

with

$$\begin{aligned}
\hat{x}_{k+1|k} &= \Phi\hat{x}_{k|k-1} + \Gamma_0(\tau_k^{sc}, \tau_k^{ca})u_k + \Gamma_1(\tau_k^{sc}, \tau_k^{ca})u_{k-1} \\
&\qquad + K_k(y_k - C\hat{x}_{k|k-1}) \\
\hat{x}_{0|-1} &= \mathrm{E}(x_0) \\
P_{k+1} &= \Phi P_k \Phi^T + R_1 \\
&\qquad - \Phi P_k C^T [C P_k C^T + R_2]^{-1} C P_k \Phi \\
P_0 &= R_0 = \mathrm{E}(x_0 x_0^T) \\
K_k &= \Phi P_k C^T [C P_k C^T + R_2]^{-1} \\
\overline{K}_k &= P_k C^T [C P_k C^T + R_2]^{-1}
\end{aligned}$$

minimizes the state estimate error variance $\mathrm{E}\{[x_k - \hat{x}_k]^T [x_k - \hat{x}_k] \mid Y_k\}$. Note that the filter gains K_k and $\overline{K}_k$ do not depend on τ^{sc} and τ^{ca}. Moreover, the estimation error is Gaussian with zero mean and covariance $P_{k|k} = P_k - P_k C^T [C P_k C^T + R_2]^{-1} C P_k$. □

3.3 Optimal Output Feedback

The following theorem states that the combination of Theorem 1 and Theorem 2 is optimal.

THEOREM 3—SEPARATION PROPERTY
Given the plant (3)–(7), with Y_k known when the control signal is calculated. The controller that minimizes the cost function (8) is given by

$$u_k^* = -L(\tau_k^{sc}, r_k) \begin{bmatrix} \hat{x}_{k|k} \\ u_{k-1}^* \end{bmatrix} \tag{13}$$

with

$$L(\tau_k^{sc}, r_k) = (Q_{22} + \tilde{S}_i^{22}(k+1))^{-1} \cdot \\ \cdot \left[Q_{12}^T + \tilde{S}_i^{21}(k+1) \quad \tilde{S}_i^{23}(k+1) \right]$$

where $\tilde{S}_i(k)$ is calculated as in Theorem 1, and $\hat{x}_{k|k}$ is the minimum variance estimate from Theorem 2. □

4. Future Work

Future work will include:

- Studies of how the system performs if the state of the Markov chain is not known. In this case the network model will be a *hidden Markov model*.
- Experimental verification of the results on a research platform for distributed control.

References

ÅSTRÖM, K. J. and B. WITTENMARK (1990): *Computer Controlled Systems—Theory and Design*, second edition. Prentice-Hall, Englewood Cliffs, New Jersey.

ELLIOT, J. E., L. AGGOUN, and J. B. MOORE (1995): *Hidden Markov models, estimation and control*. Springer-Verlag.

JI, Y., H. J. CHIZECK, X. FENG, and K. A. LOPARO (1991): "Stability and control of discrete-time jump linear systems." *Control-Theory and Advanced Technology*, **7:2**, pp. 247–270.

KRASOVSKII, N. N. and E. A. LIDSKII (1961): "Analytic design of controllers in systems with random attributes, I, II, III." *Automation and Remote Control*, **22:9–11**, pp. 1021–1025, 1141–1146, 1289–1294.

KRTOLICA, R., Ü. ÖZGÜNER, H. CHAN, H. GÖKTAS, J. WINKELMAN, and M. LIUBAKKA (1994): "Stability of linear feedback systems with random communication delays." *Int. J. Control*, **59:4**, pp. 925–953.

LIOU, L.-W. and A. RAY (1991): "A stochastic regulator for integrated communication and control systems: Part I - Formulation of control law." *Transactions of the ASME, Journal of Dynamic Systems, Measurement and Control*, **113**, pp. 604–611.

LUCK, R. and A. RAY (1990): "An observer-based compensator for distributed delays." *Automatica*, **26:5**, pp. 903–908.

MILLS, D. (1991): "Internet time synchronization: the network time protocol." *IEEE Trans. Communications*, **39:10**, pp. 1482–1493.

NILSSON, J. (1996): *Analysis and Design of Real-Time Systems with Random Delays*. Lic Tech thesis TFRT–3215, Department of Automatic Control, Lund Institute of Technology, Lund, Sweden.

NILSSON, J. and B. BERNHARDSSON (1996): "Analysis of real-time control systems with time delays." *Proceedings of the 35th IEEE Conference on Decision and Control, 1996, Kobe, Japan*, pp. 3173–3178.

NILSSON, J., B. BERNHARDSSON, and B. WITTENMARK (1996): "Stochastic analysis and control of real-time systems with random time delays." *Proceedings of the 13th International Federation of Automatic Control World Congress, San Francisco*, pp. 267–272.

RABINER, L. R. (1989): "A tutorial on hidden markov models and selected applications in speech recognition." *Proc. of the IEEE*, **77:2**, pp. 257–286.

RAMI, M. A. and L. E. GHAOUI (1997): "LMI optimization for nonstandard riccati equations arising in stochastic control." *IEEE Transaction on Automatic Control*. to appear.

SWORDER, D. D. (1969): "Feedback control of a class of linear systems with jump parameters." *IEEE Transactions on Automatic Control*, **14:1**, pp. 9–14.