LUND UNIVERSITY

# Efficient approximation of the inductance of a cylindrical current sheet

Lundin, Richard

1984

Link to publication

*Citation for published version (APA):*
Lundin, R. (1984). *Efficient approximation of the inductance of a cylindrical current sheet*. (Technical Report LUTEDX/(TEAT-7001)/1-35/(1984); Vol. TEAT-7001). [Publisher information missing].

*Total number of authors:*
1

**General rights**
Unless other specific re-use rights are stated the following general rights apply:
Copyright and moral rights for the publications made accessible in the public portal are retained by the authors and/or other copyright owners and it is a condition of accessing publications that users recognise and abide by the legal requirements associated with these rights.
• Users may download and print one copy of any publication from the public portal for the purpose of private study or research.
• You may not further distribute the material or use it for any profit-making activity or commercial gain
• You may freely distribute the URL identifying the publication in the public portal

Read more about Creative commons licenses: https://creativecommons.org/licenses/

**Take down policy**
If you believe that this document breaches copyright please contact us providing details, and we will remove access to the work immediately and investigate your claim.

LUND UNIVERSITY

PO Box 117
221 00 Lund
+46 46-222 00 00

CODEN:LUTEDX/(TEAT-7001)/1-35/(1984)

# Efficient Approximation of the Inductance of a Cylindrical Current Sheet

**Richard Lundin**

Department of Electroscience
Electromagnetic Theory
Lund Institute of Technology
Sweden

Richard Lundin

Department of Electroscience
Electromagnetic Theory
Lund Institute of Technology
P.O. Box 118
SE-221 00 Lund
Sweden

Editor: Gerhard Kristensson
© Richard Lundin, Lund, 1984

# EFFICIENT APPROXIMATION OF THE INDUCTANCE OF A CYLINDRICAL CURRENT SHEET

by

Richard Lundin

This report comprises the article "Efficient approximation of the inductance of a cylindrical current sheet" and two supplementary sections. The first section treats the question of how to calculate the inductance of a coil. The second section is aimed at providing a theoretical background to the computed approximations of the article. The second section is also intended to demonstrate that the efficiency of the computed approximations is the result of a systematic approach.

# Table of contents

## EFFICIENT APPROXIMATION OF THE INDUCTANCE OF A CYLINDRICAL CURRENT SHEET

page

Abstract.....1
Introduction.....1
The exact solution.....2
Analytical properties.....3
Approximation.....5
A handbook formula.....6
Discussion.....7
Result.....8
Acknowledgments.....8
References [1] - [10] .....8

## 1. The low frequency inductance of a closely-wound, single-layer, air-core, circular coil of thin wire

1.0 Introduction.....10
1.1 The inductance of a closely-wound, single-layer, circular coil of thin wire.....10
1.2 Definition of inductance.....12
1.3 The inductance of a cylindrical current sheet.....14
1.4 Mutual inductance of coaxial circular filaments....15
1.5 The mutual and self-inductance of coaxial tori with equal radii.....16
1.6 Geometric mean distance of point from a circle.....17
1.7 Geometric mean distance betweeen two circular areas.....18
1.8 Geometric mean distance of circular area from itself.....19
1.9 The inductance of a set of coaxial tori with equal radii.....19

## 2. Rational approximation and expansion into series of Chebyshev polynomials

page

2.0 Introduction.....21
2.1 The approximation problem.....21
2.2 A normed linear space.....22
2.3 Rational functions.....23
2.4 Rational approximation.....23
2.5 A numerical example of rational approximation.....24
2.6 An inner-product space.....28
2.7 The Chebyshev polynomials.....29
2.8 Shifted Chebyshev polynomials.....31
2.9 Truncation of an infinite power series.....31
2.10 A numerical example of expansion into series of Chebyshev polynomials.....33

References [11] - [19].....35

# EFFICIENT APPROXIMATION OF THE INDUCTANCE OF A CYLINDRICAL CURRENT SHEET

R. Lundin

Abstract - The exact formula for the inductance of a right circular cylindrical current sheet was first given in 1879 by Lorenz. The formula includes, apart from simple factors, a function of the shape ratio. This function was tabulated by Nagaoka. This paper investigates how to efficiently approximate the Nagaoka coefficient. Two analytical functions are selected for approximation and Chebyshev series expansions of these functions are given. A computer program based on such expansions will produce full-precision values for all input arguments at a small cost in terms of the total number of elementary arithmetic operations needed. A new short "handbook formula" for the inductance is also given.

## INTRODUCTION

A constant surface current $j_s$ forms a right circular cylindrical current sheet. The sheet is divided into N equal circular strips. Each strip is carrying a current I. The sheet is characterized by its radius a, length b and number of turns N. See Figure 1. The relation

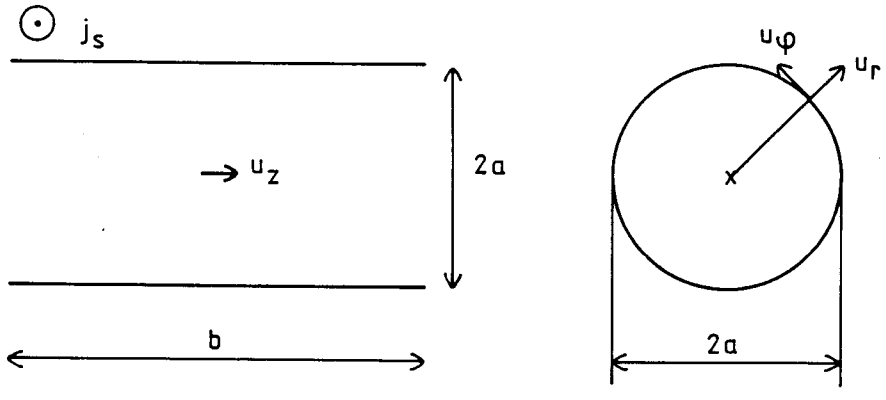


Fig. 1 A cylindrical current sheet

between $j_s$ and I is

$$j_s = \frac{N \cdot I}{b}.$$

A closely-wound, single-layer circular coil of thin wire can be idealized to a cylindrical current sheet[1]. The length b of the current sheet should then be chosen as

$$b = N \cdot p,$$

where p is the pitch of the coil and N is the number of turns. The exact formula for the inductance of a cylindrical current sheet was first given by Lorenz[2]. Lorenz´s formula involves a function of the shape ratio $(\frac{2a}{b})$. This paper demonstrates how to efficiently approximate this function.

## THE EXACT SOLUTION

The inductance L is

$$L = \mu_0 \frac{N^2 \pi a^2}{b} f(\frac{2a}{b}), \qquad (1)$$

where $\mu_0 = 4\pi \cdot 10^{-7}$ H/m.

Let $k = \frac{2a}{\sqrt{4a^2+b^2}}$, then

$$f = \frac{4}{3\pi} \frac{1}{\sqrt{1-k^2}} \left\{ \frac{1-k^2}{k^2} K + \frac{2k^2-1}{k^2} E - k \right\}, \qquad (2)$$

in which K and E are the complete elliptic integrals of the first and second kind,

$$K = \int_0^{\pi/2} \frac{d\varphi}{\sqrt{1-k^2 \sin^2\varphi}}, \qquad E = \int_0^{\pi/2} \sqrt{1-k^2 \sin^2\varphi}\, d\varphi.$$

The function f was tabulated for routine calculation by Nagaoka[3]. See Figure 2.

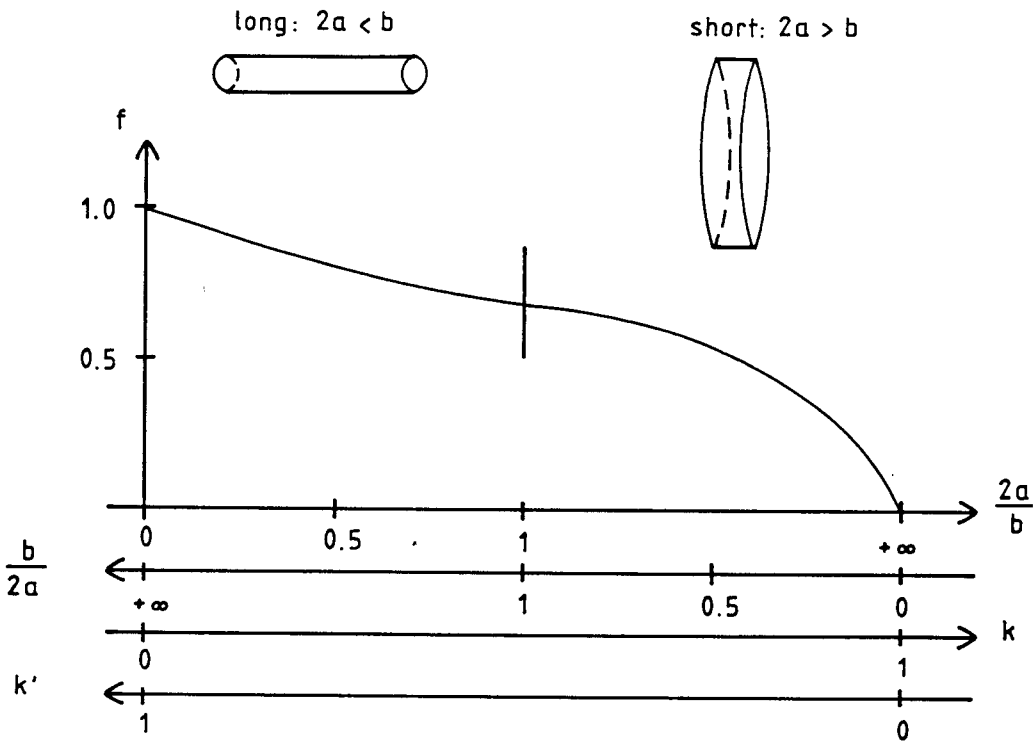


Fig. 2. The Nagaoka coefficient

## ANALYTICAL PROPERTIES

It is obviously possible to rewrite (1) as

$$L = \mu_0 \, N^2 \, a \quad f^*\left(\frac{b}{2a}\right). \tag{3}$$

The asterisk is used here as an index to distinguish different functions. The reader should associate each asterisk-marked function with one of the arguments $\frac{b}{2a}$, $\frac{b^2}{4a^2}$ or $k'^2$. Substituting the series for K and E gives

$$\begin{cases} f = P_1(k) & (4) \\ f^* = \ln\left(\frac{1}{k'^2}\right) P_1^*(k'^2) + P_2^*(k'^2) & (5) \\ k'^2 = 1 - k^2. \end{cases}$$

$P_1$, $P_1^*$ and $P_2^*$ are expressed as power series, convergent within the unit circle and thus for all current sheets. A change of independent variables yields (formally)

$$\begin{cases} f = P_2(\frac{2a}{b}) & (6) \\ f^* = \ln(\frac{2a}{b})\ P_3^*(\frac{b^2}{4a^2}) + P_4^*(\frac{b^2}{4a^2}), & (7) \end{cases}$$

where $P_2$ , $P_3^*$ and $P_4^*$ also are expressed as power series. $P_2$ converges only if $\frac{2a}{b} \leq 1$ , $P_3^*$ and $P_4^*$ converge only if $\frac{b}{2a} \leq 1$ .The general terms given by Butterworth[4] verify this.
According to his formula (H)

$$P_2(\frac{2a}{b}) = {}_2F_1(\frac{1}{2}, -\frac{1}{2}; 2; -\frac{4a^2}{b^2}) - \frac{4}{3\pi}\frac{2a}{b} , \qquad (8)$$

where ${}_2F_1(a,b;c;z)$ is Gauss´ hypergeometric function. The following statement is now made by the author:

$$P_3^*(\frac{b^2}{4a^2}) = {}_2F_1(\frac{1}{2}, -\frac{1}{2}; 2; -\frac{b^2}{4a^2}). \qquad (9)$$

It is possible to derive (9) from (8),(6),(1),(3) and (7) using the theory of homogeneous linear differential equations ( see ref.[5]). The same derivation may be carried out by refering to an appropriate transformation formula. Such a formula is (15.3.14) in "Handbook of Mathematical Functions"[6].
Combining (8) and (9) gives ( see Figure 3 )

$$P_3^*(x^2) = P_2(x) + \frac{4}{3\pi}\ x , \qquad 0 \leq x \leq 1 . \qquad (10)$$

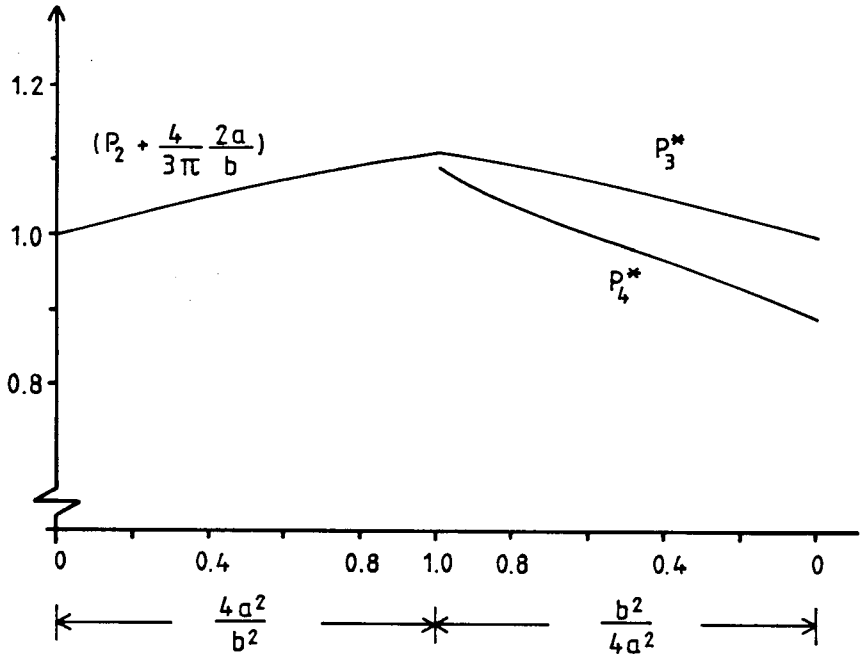


Fig. 3. It is sufficient to approximate $P_3^*$ and $P_4^*$

## APPROXIMATION

Formulas (6) and (7) involve the dimensions as a simple ratio and cover together the whole range of possible current sheets. However, if $2a \approx b$ ,the speed of convergence is low. The remedy is conversion from the given point-expansions to interval-expansions. A reasonable alternative is to convert into series of Chebyshev polynomials[7]. The practical value of (10) now becomes evident. The expansions corresponding to (6) and (7) are

$$\begin{cases} f = \sum_{n=0}^{\infty}{}' c_n T_n^*\left(\frac{4a^2}{b^2}\right) - \frac{4}{3\pi}\frac{2a}{b} & 2a \leq b \quad (11) \\ f^* = \ln\left(\frac{2a}{b}\right) \sum_{n=0}^{\infty}{}' c_n T_n^*\left(\frac{b^2}{4a^2}\right) + \sum_{n=0}^{\infty}{}' d_n T_n^*\left(\frac{b^2}{4a^2}\right) & 2a \geq b, \quad (12) \end{cases}$$

where

$$T_n^*(x) = \cos(n \arccos(2x - 1)), \qquad 0 \leq x \leq 1,$$

and the prime on the summation indicates that only half of the first term is used. The coefficients $c_n$ and $d_n$ are thus the Chebyshev coefficients of $P_3^*$ and $P_4^*$ . The asterisk in $T_n^*$ is only standard notation. Identification of (7) and (5) gives the following equations

$$\begin{cases} P_3^*\left(\frac{b^2}{4a^2}\right) = 2\, P_1^*(k'^2) & (13) \\ P_4^*\left(\frac{b^2}{4a^2}\right) = \ln\left(1+ \frac{b^2}{4a^2}\right) P_1^*(k'^2) + P_2^*(k'^2), & (14) \end{cases}$$

where

$$k'^2 = \frac{b^2}{(b^2+4a^2)} .$$

These equations were used to evaluate $P_3^*$ and $P_4^*$ when calculating the Chebyshev coefficients given in Table I . The general terms of $P_1^*(k'^2)$ and $P_2^*(k'^2)$ may be obtained from Butterworth or from the series for K and E.

The following conclusions may now be drawn. The inductance of long current sheets ($2a \leq b$) is approxi-

mated through (1) and a truncation of (11). The inductance of short current sheets ($2a \geq b$) is approximated through (3) and a truncation of (12). Only two sets of coefficients is needed due to (10). The approximation is efficient since the magnitude of the coefficients is decreasing rapidly with increasing polynomial order.

Table I

Chebyshev coefficients

| n | $c_n$ | $d_n$ |
|---|---|---|
| 0 | +2.115 527 6261 | +1.969 841 7429 |
| 1 | +0.056 340 9312 | +0.097 495 7309 |
| 2 | − 1 339 8845 | − 1 085 2334 |
| 3 | + 76 4023 | + 42 7413 |
| 4 | − 5 9760 | − 2 5886 |
| 5 | + 5544 | + 1970 |
| 6 | − 573 | − 173 |
| 7 | + 64 | + 17 |
| 8 | − 8 | − 2 |
| 9 | + 1 | |

$$\sum_{n=0}^{\infty}{}' c_n (-1)^n = 1 \qquad \sum_{n=0}^{\infty}{}' d_n (-1)^n = \ln(4) - \frac{1}{2}$$

$$\sum_{n=0}^{\infty}{}' c_n \simeq 1.112\ 835\ 7889 \qquad \sum_{n=0}^{\infty}{}' d_n \simeq 1.081\ 371\ 7029$$

## A HANDBOOK FORMULA

The following "handbook formula" is asymptotically correct and produces the inductance with a maximum relative error less than $0.3\ 10^{-5}$.

If $2a \leq b$ then

$$L = \frac{\mu_0 N^2 \pi a^2}{b} \left\{ f_1\left(\frac{4a^2}{b^2}\right) - \frac{4}{3\pi}\frac{2a}{b} \right\} \tag{15}$$

else $2a > b$ and

$$L = \mu_0 N^2 a \left\{ \left[ \ln\left(\frac{8a}{b}\right) - \frac{1}{2} \right] f_1\left(\frac{b^2}{4a^2}\right) + f_2\left(\frac{b^2}{4a^2}\right) \right\} \tag{16}$$

where

$$f_1(x) \simeq \frac{1 + 0.383901\ x + 0.017108\ x^2}{1 + 0.258952\ x}\ , \qquad (17)$$

$$f_2(x) \simeq 0.093842\ x + 0.002029\ x^2 - 0.000801\ x^3\ . \qquad (18)$$

The coefficients in (17) and (18) were computed by a program based on [8]. The relationship of $f_1$ and $f_2$ to previously defined functions is

$$\begin{cases} f_1(\frac{b^2}{4a^2}) = P_3^*(\frac{b^2}{4a^2}) & (19) \\ f_2(\frac{b^2}{4a^2}) = P_4^*(\frac{b^2}{4a^2}) - [\ \ln(4) - \frac{1}{2}\ ]\ P_3^*(\frac{b^2}{4a^2})\ . & (20) \end{cases}$$

This choice was made in order to display the asymptotic behaviour.

## DISCUSSION

Long before the advent of the high-speed computer several point-expansions were given by a number of authors[9]. In a more recent article Fawzi and Burke[10] present an efficient algorithm which produces the self-inductance of a cylindrical current sheet as a special case. A computer program based on this algorithm or on (1), (2) and library routines for K and E will suffer from a loss of significant figures caused by subtraction if $2a \gg b$ . Such a program will also be slower than a program based on interval-expansions and the standard function for the natural logarithm. It could, however, be argued that with a computer and a couple of guard digits these drawbacks are of little significance.

The inductance is calculated to six figure accuracy through the "handbook formula" (15-18). The same degree of accuracy is obtained by interpolation in Nagaoka´s table[3]. Thus Nagaoka´s table (160 function values) is contained in "the handbook formula".

In order to facilitate design work, a number of nomograms of the Nagaoka coefficient have been published in the electrotechnical literature. A compact

approximation formula like the "handbook formula" can be considered as a powerful alternative to a nomogram.

## RESULT

The main result presented is equation (10). This equation is a consequence of (8) and (9). Equation (8) is Butterworth´s formula (H) and (9) is implicit in Butterworth´s formula (L).

The observation (10) leads to approximation formulas with a minimum number of coefficients.

An easy to use "handbook formula" has been presented.

## ACKNOWLEDGMENTS

The author wishes to thank Professor P.O. Brundell, Department of Electromagnetic Theory, Lund Institute of Technology, for encouragement and support. Thanks are also due to Professor I. Tagesson for checking the manuscript and to E. Szybicka-Strauss for drawing the figures.

## REFERENCES

[1] F.W. Grover, "Inductance Calculations", New York, Dover Publications, 1962, pp. 142-147

[2] L. Lorenz, "Ueber die Fortplanzung der Electricität", Annalen der Physik und Chemie, vol. 7, pp. 170-171, 1879

[3] H. Nagaoka, "The Inductance Coefficients of Solenoids", Journal of the College of Science, vol. 27, pp. 18-33, 1909

[4] S. Butterworth, "On a Method for deriving Mutual- and Self-inductance Series", Philosophical Magazine and Journal of Science, vol. 31, pp. 276-285, 1916

[5] E.T. Copson, "Theory of functions of a complex variable", Oxford University Press, 1935, pp. 233-248

[6] M. Abramowitz and I.A. Stegun, "Handbook of Mathematical Functions", National Bureau of Standards, 1964, p. 560

[7] L. Fox and I.B. Parker, "Chebyshev Polynomials in Numerical Analysis", London, Oxford University Press, 1968, pp. 66-67

[8] W.J. Cody, W. Fraser and J.F. Hart, "Rational Chebyshev approximation using linear equations", Numerische Mathematik, vol. 12, pp. 242-251, 1968

[9] F.W. Grover, "Inductance of single-layer solenoids", Bureau of Standards Journal of Research, vol. 1, pp. 502-509, 1928

[10] T.H. Fawzi and P.E. Burke, "The accurate computation of self- and mutual-inductances of circular coils", IEEE Transactions on Power Apparatus and Systems, vol. 97, pp. 464-468, 1978

# 1. The low frequency inductance of a closely-wound, single-layer, air-core, circular coil of thin wire

## 1.0 Introduction

This is the first of two sections supplementing the article "Efficient approximation of the inductance of a cylindrical current sheet". A definition of inductance is given (1.2). If the current sheet is an idealization of an actual coil, the current sheet inductance, of course, differs from the actual inductance (1.1). A formula to compute a more accurate inductance value is given (1.9). The concepts used in the following are after the literature[1].

## 1.1 The inductance of a closely-wound, single-layer, circular coil of thin wire

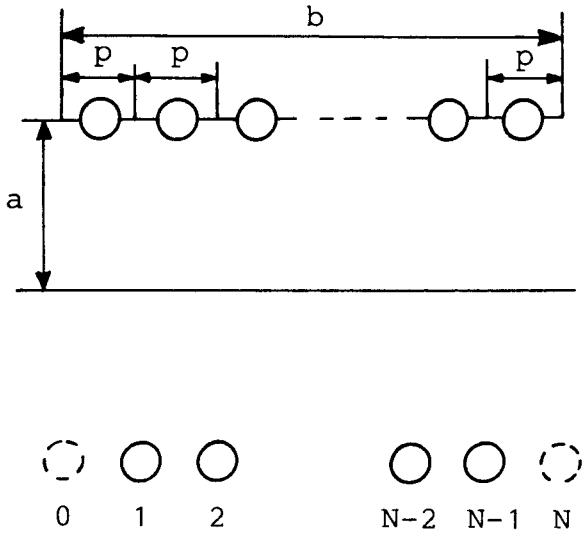


Fig. 4 A helix

The actual coil has the form of a helix of mean radius a, pitch p and a certain number of turns N. The wire is supposed to have circular cross-section. The helix can be idealized to a cylindrical current sheet. The length of the equivalent current sheet

should be chosen

$$b = N \cdot p. \tag{1.11}$$

The exact inductance of the current sheet can be calculated (1.33) and used as an approximation for the inductance of the actual coil. The helix can also be idealized to a set of coaxial tori. The inductance of this set of coaxial tori can then be calulated (1.94) and used as another approximation for the actual inductance. Although the latter calculation is not exact the tori-idealization generally (but not always) results in a more accurate inductance value than the current-sheet alternative. This is so because the current-sheet idealization takes no account of the cross-sectional dimensions of the wire. As an illustration to this the following numerical example is given:

$$\begin{cases} \text{radius of wire} & = 0.25 \text{ mm} \\ \text{pitch of helix} & = 1 \quad \text{mm} \\ \text{number of turns} & = 400 \\ \text{radius of helix} & = 150 \quad \text{mm} \end{cases} .$$

The wire is assumed to have a circular cross-section. The current-sheet formula (1.33) gives

$$L_s = 2.656\ 8401\ 10^{-2} \text{ Henry}. \tag{1.12}$$

The tori-formula (1.94) gives

$$L_t = 2.655\ 3423\ 10^{-2} \text{ Henry}. \tag{1.13}$$

A helix formula by Snow[14] gives

$$L_h = 2.655\ 3486\ 10^{-2} \text{ Henry}. \tag{1.14}$$

If we assume $L_h$ to be the best value the relative errors of $L_s$ and $L_t$ may be estimated as

$$\frac{L_s - L_h}{L_h} = 0.6\ 10^{-3}, \tag{1.15}$$

$$\frac{L_t - L_h}{L_h} = -0.2\ 10^{-5}. \tag{1.16}$$

If the radius of the wire is varied from a small value up to half the pitch we may calculate the curve given in Figure 5. The current-sheet value is independent of this radius and is obviously an under-estimation when the radius of wire is small compared to the pitch, and an over-estimation when the coil is closely-wound with thin wire isolation.

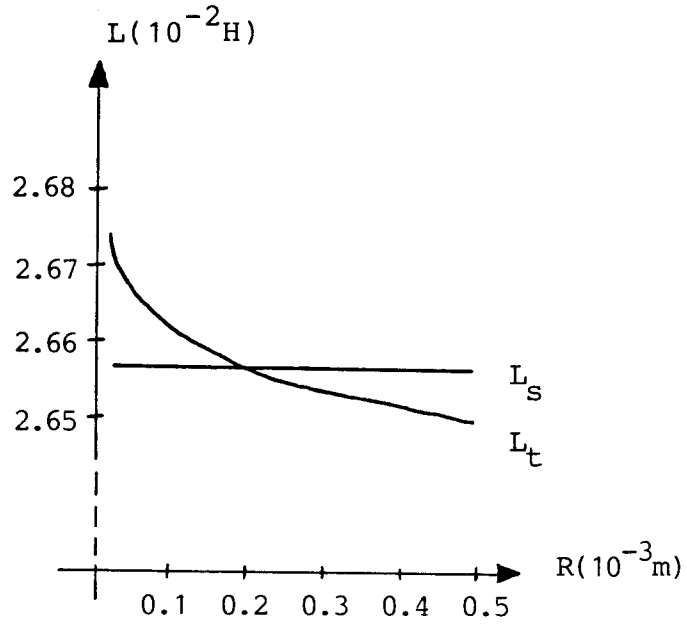


Fig. 5 The sheet-idealization is independent of the wire radius

## 1.2 Definition of inductance

Consider a current system consisting of n circuits. See Figure 6. The circuits are fixed in space. There is no magnetic material present, i.e. the relative permeability is everywhere unity. Assume further the currents to be direct currents or alternating currents of low frequency. This could also be stated as assumptions of quasi-stationariness and negligble skin-effect.

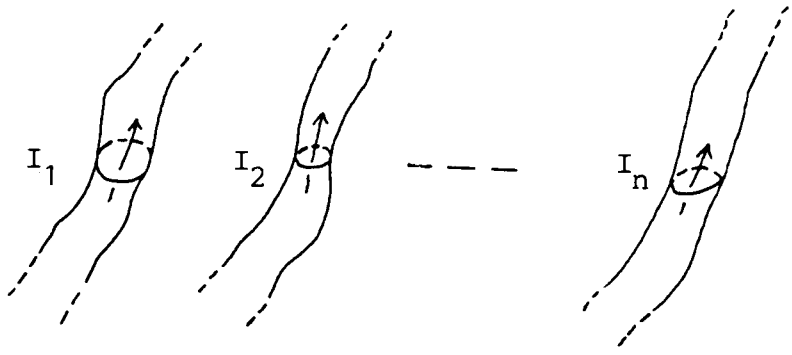


Fig. 6 A current system

A distribution of current density $\bar{j}$ generates a vector potential

$$\bar{A} = \frac{\mu_0}{4\pi} \int \frac{\bar{j}\, dv}{r} , \qquad [H\ (11,31)]^* \qquad (1.21)$$

where $\mu_0$ is the permeability of vacuum.
The time-dependent magnetic energy of the system is

$$W_m = \int \frac{1}{2}\, \bar{j}\cdot\bar{A}\, dv . \qquad [H\ (18,38)] \qquad (1.22)$$

The mutual inductance between circuit $\mu$ and circuit $\nu$ is denoted $M_{\mu\nu}$. The self-inductance of circuit $\mu$ is $M_{\mu\mu}$ or $L_{\mu\mu}$. $M_{\mu\nu}$ and $L_{\mu\mu}$ are under the given assumptions constant scalar quantities.
The inductance is defined by the Neumannn formula

$$M_{\mu\nu} = \frac{1}{I_\mu I_\nu} \int \bar{j}_\mu\cdot\bar{A}_\nu\, dv , \qquad [H\ (18,66)] \qquad (1.23)$$

$$M_{\nu\mu} = M_{\mu\nu} , \qquad (1.24)$$

$$L_{\mu\mu} = M_{\mu\mu} \geq 0. \qquad (1.25)$$

The principle of superposition now gives

$$W_m = \sum_{\mu=1}^{n} \sum_{\nu=1}^{n} \frac{1}{2} M_{\mu\nu} I_\mu I_\nu . \qquad (1.26)$$

* Ref. [19] : E. Hallén, "Electromagnetic theory"

If all currents are equal (the circuits are connected in series) then

$$W_m = \sum_{\mu=1}^{n} \sum_{\nu=1}^{n} \frac{1}{2} M_{\mu\nu} I^2 \tag{1.27}$$

and the summation formula

$$L = \sum_{\mu=1}^{n} \sum_{\nu=1}^{n} M_{\mu\nu} \tag{1.28}$$

gives the inductance L of the whole system.
The SI inductance unit is

$$1\ \mathrm{H} = 1\ \mathrm{Henry} = 1\ \frac{\mathrm{Vs}}{\mathrm{A}}\ .$$

## 1.3 The inductance of a cylindrical current sheet

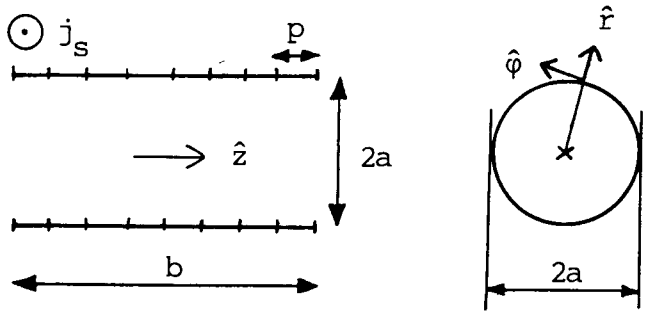


Fig. 7 A cylindrical current sheet

A constant surface current $j_s$ forms a right circular cylindrical current sheet. The sheet is divided into N equal circular strips. Each strip is carrying a current I. The relation between $j_s$ and I is

$$j_s = \frac{N \cdot I}{b}\ . \tag{1.31}$$

The inductance is (1.23)

$$L = \frac{1}{I^2} \int \bar{j} \cdot \bar{A}\ dv = \frac{\mu_0}{4\pi} \frac{1}{I^2} \iint_{12} \frac{\bar{j}_{s1}\ \bar{j}_{s2}\ dS_1 dS_2}{r_{12}} =$$

$$= \frac{\mu_0}{4\pi} \frac{j_{s1} j_{s2}}{I^2} \iint_{12} \frac{\hat{\varphi}_1 \cdot \hat{\varphi}_2\ dS_1 dS_2}{r_{12}} =$$

$$= \frac{\mu_0}{4\pi} \left(\frac{N}{b}\right)^2 \iint_{12} \frac{\cos(\varphi_1-\varphi_2)\, dS_1 dS_2}{r_{12}} \qquad (1.32)$$

with $\quad r_{12} = [\ (a\cos\varphi_1 - a\cos\varphi_2)^2 +$

$$+ (a\sin\varphi_1 - a\sin\varphi_2)^2 + (z_1-z_2)^2\ ]^{\frac{1}{2}}.$$

The integration is from the current sheet to itself and results in

$$L = \frac{\mu_0 N^2 \pi a^2}{b}\ f\left(\frac{2a}{b}\right). \qquad [\ H(17,25)] \qquad (1.33)$$

The function f is called the Nagaoka coefficient. The exact expression for f, involving elliptic integrals, is given in the article.

A new algorithm for the calculation of the mutual inductance of coaxial circular cylindrical current sheets was presented by Fawzi and Burke[10]. The Nagaoka coefficient is obtained as a special case. According to Fawzi-Burke

$$f = \frac{4a}{b}\ [\ Ci(a,b) - \frac{2}{3\pi}\ ], \qquad (1.34)$$

where Ci(a,b) is evaluated by an iterative algorithm. There will be a loss of significant figures if 2a >> b due to the subtraction in (1.34).

## 1.4 Mutual inductance of coaxial circular filaments

Two coaxial circular filaments have radii $a_1$ and $a_2$ respectively. The distance between their planes is denoted by d. The exact formula for the mutual inductance is

$$\begin{cases} M_{12} = \mu_0 \sqrt{a_1 a_2}\ g(k) & [\ H(17,63)] \quad (1.41) \\ g(k) = \left(\frac{2}{k} - k\right) K(k) - \frac{2}{k} E(k) & [\ H(17,64)] \quad (1.42) \\ k = 2\sqrt{\dfrac{a_1 a_2}{d^2+(a_1+a_2)^2}} & [\ H(17,62)] \quad (1.43) \end{cases}$$

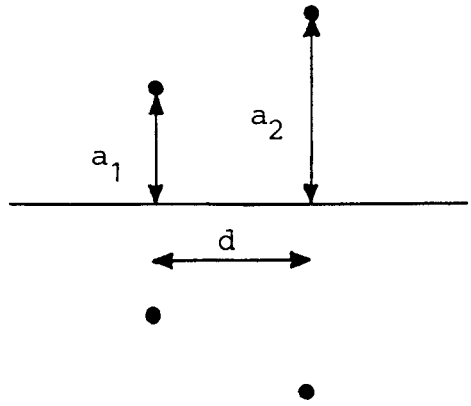


Fig. 8 Two coaxial circular filaments

If $a_1 \approx a_2 \approx a$ and $d \ll a$ then $k \lesssim 1$ and

$$M_{12} \approx m_c = \mu_0 a \left[ \ln\left(\frac{8a}{r_{12}}\right) - 2 \right], \qquad (1.44)$$

with $r_{12} = \sqrt{d^2+(a_1-a_2)^2}$.

More precise $|m_c - M_{12}| \to 0$ when $\begin{cases} r_{12} \to 0 \\ a_1 \to a > 0 \end{cases}$,

since $\left| K - \frac{1}{2} \ln \frac{16}{1-k^2} \right| \to 0$ when $k \to 1-$ .

## 1.5 The mutual and self-inductance of coaxial tori with equal radii

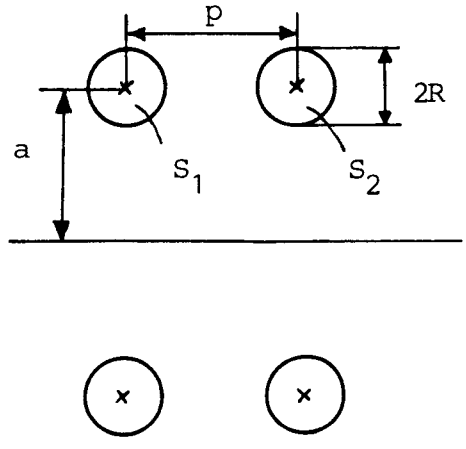


Fig. 9 Two coaxial tori

If $2R \ll a$ and $p \ll a$ then

$$M_{\mu\nu} = \frac{1}{I_\mu I_\nu} \iint_{\mu\nu} m_c \, j_\mu dS_\mu j_\nu dS_\nu \qquad \mu,\nu = 1,2. \qquad (1.51)$$

The formula (1.44) for $m_c$ and the assumptions

$$j_\mu = \frac{I_\mu}{S_\mu} \qquad \mu = 1,2 \qquad \text{give}$$

$$M_{\mu\nu} = \mu_0 a \; [\; \ln(8a) - 2 - \ln(G_{\mu\nu}) \;] \;, \tag{1.52}$$

with

$$\ln(G_{\mu\nu}) = \frac{1}{S_\mu S_\nu} \iint_{\mu\nu} \ln(r_{\mu\nu}) \; dS_\mu dS_\nu \;. \tag{1.53}$$

The integrals are determined by the shape and separation of the cross-sections. Circular cross-sections give

$$G_{12} = p \qquad \text{and} \qquad G_{11} = G_{22} = R\; e^{-1/4}. \tag{1.54}$$

The calculation of these "geometric mean distances" is performed in the next three paragraphs.

Now

$$L_{11} = \mu_0 a \; [\; \ln(\frac{8a}{R}) - \frac{7}{4} \;], \text{ compare } [\; H(19,25)], \tag{1.55}$$

and

$$M_{12} = \mu_0 a \; [\; \ln(\frac{8a}{p}) - 2 \;]. \tag{1.56}$$

## 1.6 Geometric mean distance of point from a circle

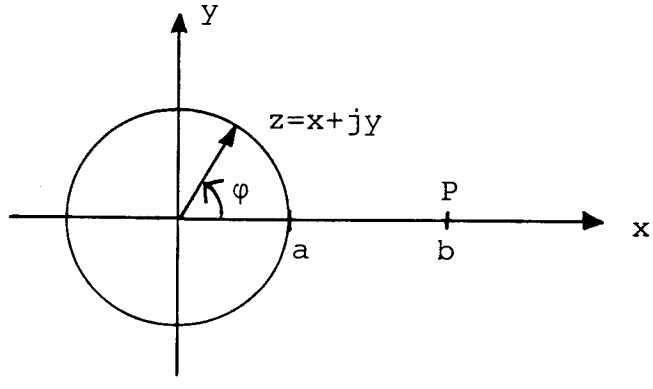


Fig. 10 GMD of point from a circle

The GMD of the point P from the circle is denoted G.

$$\ln(G) = f(a,b) = \frac{1}{2\pi} \int_0^{2\pi} \ln\left( \sqrt{a^2 + b^2 - 2ab\cos\varphi}\right) d\varphi \ .$$

Now $f(a,b) = f(b,a)$ and

$$\ln\left( \sqrt{\cdots} \right) = \mathrm{Re}\left[ \log(z-b) \right] .$$

If $a < b$ then

$$f(a,b) = \left[ z = a\, e^{j\varphi},\ d\varphi = \frac{dz}{zj} \right] =$$

$$= \frac{1}{2\pi} \oint \mathrm{Re}\left[ \log(z-b) \right] \frac{dz}{zj} = \frac{1}{2\pi} \mathrm{Re}\left[ \oint \cdots \right]$$

$$= \frac{1}{2\pi} \mathrm{Re}\left[ 2\pi j \frac{\log(-b)}{j} \right] = \ln(b) \ . \qquad (1.61)$$

If $a > b$ then

$$f(a,b) = f(b,a) = \ln(a) \ . \qquad (1.62)$$

Evidently $G = b$ if the point is outside the circle and $G = a$ if the point is inside.

## 1.7 Geometric mean distance between two circular areas

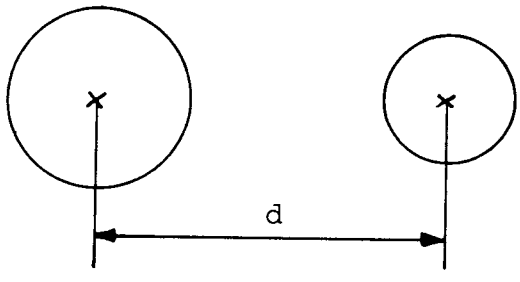


Fig. 11 GMD between two circular areas

The GMD of one circular area from another equals the distance between their centers. This is an immediate consequence of the result of the preceding paragraph. The two circular areas are here taken to be separated.

## 1.8 Geometric mean distance of circular area from itself

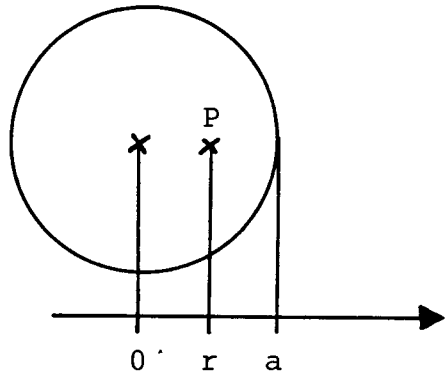


Fig. 12 GMD of point P within circular area

The radius of the circular area is a and the GMD of it from itself is G. We first calculate the GMD g of a point P within the circular area.

$$\ln(g(r)) = \frac{1}{\pi a^2}\left( \pi r^2 \ln(r) + \int_r^a \ln(\tau)\, 2\pi\tau\, d\tau \right)$$

$$\ln(g(r)) = \frac{r^2}{2a^2} + \ln(a) - \frac{1}{2}$$

and now we are ready to calculate G

$$\ln(G) = \frac{1}{\pi a^2} \int_0^a \left( \frac{\tau^2}{2a^2} + \ln(a) - \frac{1}{2} \right) 2\pi\tau\, d\tau$$

$$\ln(G) = \ln(a) - \frac{1}{4}$$

$$G = a\, e^{-1/4}. \qquad (1.81)$$

## 1.9 The inductance of a set of coaxial tori with equal radii

The summation formula for the inductance gives

$$L = \sum_{\mu=1}^{N} \sum_{\nu=1}^{N} M_{\mu\nu} \qquad (1.91)$$

See Figure 13. We now assume $2R \ll a$ .
Assume further the current to be uniformly distributed over the cross-sectional area.

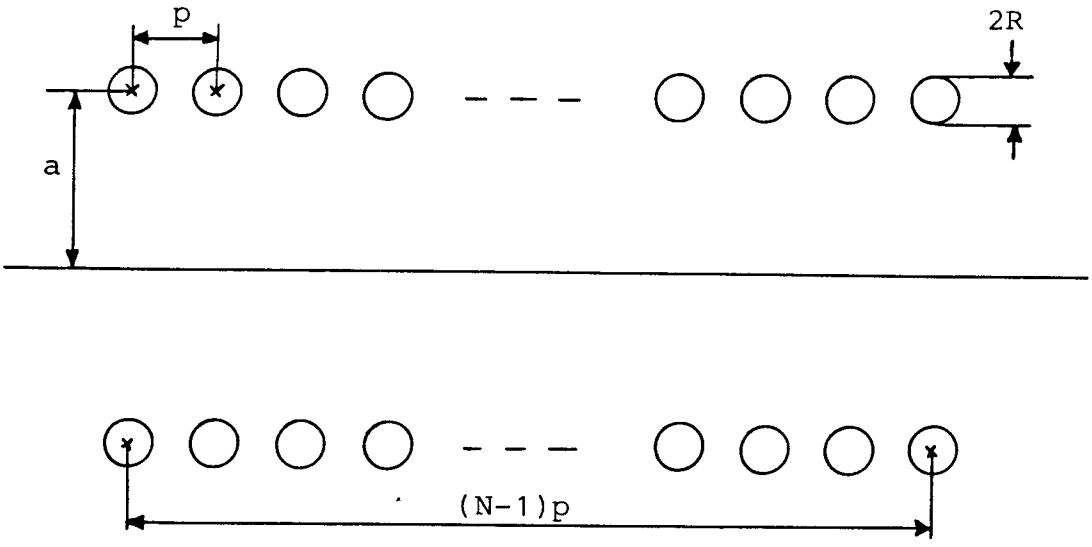


Fig. 13 A set of coaxial tori

If $\mu = \nu$ then (1.55) gives

$$M_{\mu\mu} = L_{\mu\mu} = \underline{L_{11} = \mu_0 a \left[ \ln\left(\frac{8a}{R}\right) - \frac{7}{4} \right]}. \qquad (1.92)$$

If $\mu \neq \nu$ and $|\mu-\nu|\, p \ll a$ then (1.56,1.44,1.41) give

$$M_{\mu\nu} = \underline{M_{1n} = \mu_0 a\, g(k)}\ , \qquad (1.93)$$

with

$$n = 1 + |\mu-\nu| \quad \text{and} \quad k = \frac{2a}{\sqrt{|\mu-\nu|^2 p^2 + 4a^2}} \quad .$$

If not ( $|\mu-\nu|\, p \ll a$ ) then the tori are far apart and it is obvious that (1.41) provides a good approximation if $\frac{2R}{a}$ is sufficiently small.

We can now calculate L as:

$$L = N\, L_{11} + 2 \sum_{n=2}^{N} (N+1-n)\, M_{1n} \quad . \qquad (1.94)$$

This formula is asymptotically correct when $2R \to 0+$ , ($a$ = constant, $N \cdot p = b$ = constant, N may tend to infinity). The meaning of "asymptotically correct" is that the relative error of (1.94) tends to zero when $2R \to 0+$ . Nothing has been stated concerning the degree of correctness of (1.94) when applied to a given set of coaxial tori.

# 2. Rational approximation and expansion into series of Chebyshev polynomials

## 2.0 Introduction

In the "handbook formula" for the inductance of a current sheet a certain rational appproximation of the function $f_1$ is given. See equation (17) in the article. The purpose of this second section is to provide a background to this approximation. The concept of rational approximation is presented (2.4) and the mentioned rational approximation is computed (2.5). The function $f_1$, or $P_3^*$ since $f_1 = P_3^*$ , is also expanded into a series of Chebyshev polynomials. See equations (7) and (12) in the article. The convergence is rapid as monitored in Table 1. A definition of Chebyshev polynomials is given (2.7) and also a simple sufficient condition for rapid convergence (2.10).The concepts used in the following are after the literature[16].

## 2.1 The approximation problem

A metric space is a set X in which a real-valued distance function d is defined for pairs of points. This distance function must satisfy the following postulates for all x,y,z in X :

(1) $d(x,x) = 0,$

(2) $d(x,y) > 0$ if $x \neq y,$

(3) $d(x,y) = d(y,x),$

(4) $d(x,y) \leq d(x,z) + d(z,y).$

Consider now a point g and a set M in a metric space. The approximation problem is to determine a point of M of minimum distance from g. Such a closest point may or may not exist. There may also be several or an infinite number of closest points. A closest point may possess some special property. This leads to theorems of existence, uniqueness and characterization of best approximations. The question of how to find a closest point leads to the construction of algorithms.

## 2.2 A normed linear space

A normed linear space is a linear space E of vectors equipped with a real-valued function denoted $\|\cdot\|$ defined on these vectors. This function, having the following properties, is called a norm.

(1) $\|f\| > 0 \quad f \in E \quad$ unless $f=0$,

(2) $\|\lambda f\| = |\lambda|\cdot\|f\| \quad \lambda \in R$,

(3) $\|f+g\| \leq \|f\| + \|g\| \qquad f,g \in E$.

A normed linear space is also metric through the formula

$$d(f,g) = \|f-g\|.$$

Let C[a,b] be the space of all continuous real-valued functions defined on the compact interval [a,b]. Addition, scalar multiplication and a norm is defined in the following way

$$(f+g)(x) = f(x) + g(x),$$
$$(\lambda f)(x) = \lambda f(x),$$

$$\|f\| = \max_{a\leq x\leq b} |f(x)|.$$

Now C[a,b] is a normed linear space. The norm chosen for the moment is called the minimax or uniform norm. Another norm of frequent use is the weighted least-square norm

$$\|f\| = [\int_a^b f^2 \cdot w \cdot dx\ ]^{\frac{1}{2}},$$

where w(x) is a positive and continuous weight function.

## 2.3 Rational functions

We wish to approximate a given function $g \in C[a,b]$ by a rational function $R = \frac{P}{Q}$ where

$$P(x) = a_0 + a_1 x + a_2 x^2 + \ldots + a_n x^n,$$

$$Q(x) = b_0 + b_1 x + b_2 x^2 + \ldots + b_m x^m.$$

P and Q should have no common factors other than constants and since our object is to approximate, in the uniform norm, a continuous function on a compact interval, we may also require $Q(x) > 0$ on $[a,b]$. The set $R_m^n[a,b]$ is now defined :

$$R_m^n[a,b] = \left\{ \frac{P}{Q} : \delta P \leq n \ , \ \delta Q \leq m \ , \ Q(x) > 0 \right\}.$$

Here $\delta P$ and $\delta Q$ denote the degree of P and Q respectively. Obviously $R_m^n[a,b]$ is a subset of the metric space $C[a,b]$.

## 2.4 Rational approximation

A function (point) g and a set $R_m^n[a,b]$ is posited in the metric space $C[a,b]$. When approximating g by $R \in R_m^n$ let the error E be

$$E = \|R-g\| = \max_{a \leq x \leq b} |w(R-g)|,$$

where w is a positive and continuous weight function in $[a,b]$. We take from the literature[16][17] the following existence and uniqueness theorem.

(T1) To each function $g \in C[a,b]$ there corresponds one and only one best rational approximation from the set $R_m^n[a,b]$.

There is also the following characterization theorem.

(T2) In order that the irreducible rational function

$\frac{P}{Q}$ be a best approximation to g from the set

$R_m^n[a,b]$, it is necessary and sufficient that the error have at least $2 + \max(n+\delta Q,\ m+\delta P)$ alternations.

The error function $e = R-f$ has $p+1$ alternations if $e(x_i) = -e(x_{i-1}) = \pm e$ with $x_0 < \ldots < x_p$ and $x_i \in [a,b]$.

## 2.5 A numerical example of rational approximation

The function $f_1$ is defined by the equations (19) and (9) in the article:

$$f_1(x) = P_3^*(x), \qquad 0 \le x \le 1,$$

$$P_3^*(x) = {}_2F_1(\tfrac{1}{2}, -\tfrac{1}{2}; 2; -x), \qquad 0 \le x \le 1,$$

where ${}_2F_1(a,b;c;z)$ is Gauss' hypergeometric function and consequently

$$f_1(0) = 1,$$

$$f_1(x) = \frac{\Gamma(2)}{\Gamma(\frac{1}{2})\ \Gamma(-\frac{1}{2})} \sum_0^\infty \frac{\Gamma(\frac{1}{2}+n)\ \Gamma(-\frac{1}{2}+n)}{\Gamma(2+n)} \frac{(-x)^n}{n!} .$$

The convergence for this series is slow when $x \lesssim 1$. Therefore we use the transformation formula (15.3.4) in "Handbook of Mathematical Functions"[6] to produce the alternative representation

$$f_1(x) = \frac{1}{\sqrt{1+x}}\ {}_2F_1(\tfrac{5}{2},\tfrac{1}{2};2;\tfrac{x}{1+x}), \qquad 0 \le x \le 1.$$

The graph of $f_1$ is given in Figure 14.

We now pose the following practical approximation problem. Seek a <u>rational(1)</u> approximation $R_1$ which produces $f_1$ with a certain weighted <u>error less than $0.5\ 10^{-5}$ (3)</u> and which is <u>exactly correct at the</u>

left endpoint(2). The number of coefficients should be minimal(4).

$$(1)\quad R_1(x) = \frac{a_0 + a_1 x + \ldots + a_p x^p}{1 + b_1 x + \ldots + b_m x^m}$$

$$(2)\quad R_1(0) = 1$$

$$(3)\quad \max_{0 \le x \le 1} \frac{R_1 - f_1}{f_1 - \frac{4\sqrt{x}}{3\pi}} < 0.5\ 10^{-5}$$

$$(4)\quad (m+p) \text{ minimal}$$

The background to condition (3) is that the relative error of the current sheet inductance should be less than $0.5\ 10^{-5}$.

To solve this problem we have at our disposal an 8-digit high-speed computer and a program (routine IRATCU, library IMSL) which computes best rational approximations. We begin by concluding that $a_0 = 1$. Then we compute best approximations corresponding to different (m,p) combinations. The arguments put into the computer are

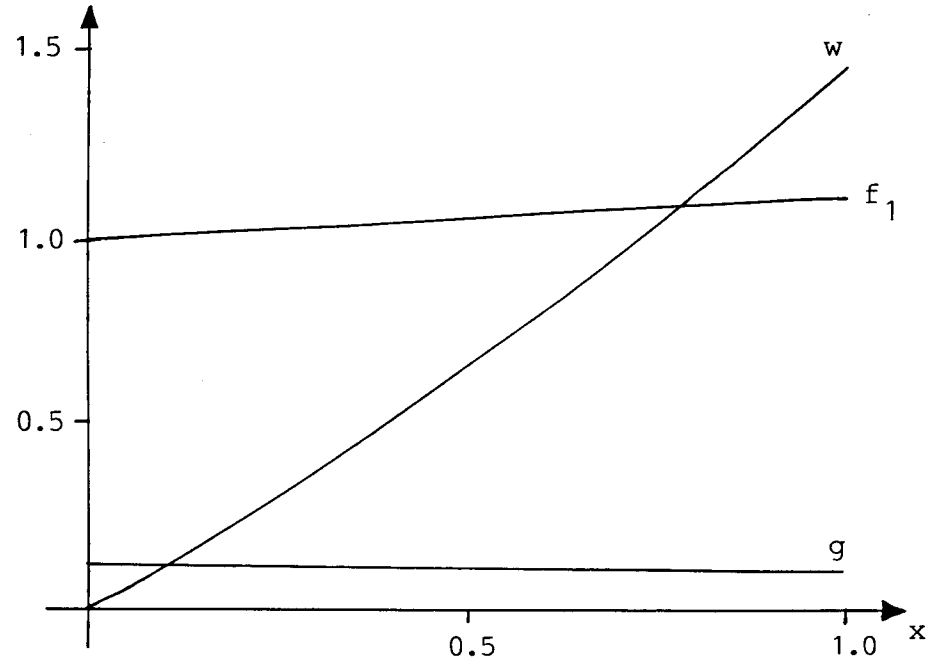


Fig. 14 $f_1(x)$, $g(x)$ and $w(x)$

$$g = \frac{f_1 - 1}{x} \qquad w = \frac{x}{f_1 - \frac{4\sqrt{x}}{3\pi}} \qquad 0 \le x \le 1 \qquad m,p$$

and the computer output is the coefficients in

$$R = \frac{(a_1-b_1) + (a_2-b_2)\,x + \ldots + (a_m-b_m)\,x^{m-1} + \ldots + a_p x^{p-1}}{1 + b_1 x + \ldots + b_m x^m} .$$

The form of the numerator depends on whether $p < m$ or $p > m$ . The weight function is here zero at the left endpoint. See Figure 14. The computer minimizes the maximum value of

$$w(R-g) = \ldots = \frac{R_1 - f_1}{f_1 - \frac{4\sqrt{x}}{3\pi}} ,$$

which is exactly the weighted error of our problem. In order to inspect the computed minmax weighted errors we arrange them in a "Walsh Table". See Table 2.

| | p=1<br>n=0 | p=2<br>n=1 | p=3<br>n=2 |
|---|---|---|---|
| m=0 | $0.25\ 10^{-2}$ | $0.13\ 10^{-3}$ | $0.92\ 10^{-5}$ |
| m=1 | $0.73\ 10^{-4}$ | $0.25\ 10^{-5}$ | |
| m=2 | $0.47\ 10^{-5}$ | | |

Table 2 A "Walsh Table"

A solution to our problem is the approximation

$$\begin{cases} R_1 = \dfrac{1 + a_1 x + a_2 x^2}{1 + b_1 x} \\ a_1 = 0.38385243 \\ a_2 = 0.017102801 \\ b_1 = 0.25890369 \end{cases} ,$$

with an error of $0.249\ 10^{-5}$. We now reduce the coefficients

to 6 decimal digits and test within the following range

$$\begin{cases} a_1 = 0.383\ 852 \pm 0.000\ 050 \\ a_2 = 0.017\ 103 \pm 0.000\ 050 \\ b_1 = 0.258\ 904 \pm 0.000\ 050\ . \end{cases}$$

An error of $0.250\ 10^{-5}$ is achieved when

$$\begin{cases} a_1 = 0.383\ 901 \\ a_2 = 0.017\ 108 \\ b_1 = 0.258\ 952\ . \end{cases}$$

A new test with these coefficients as starting points

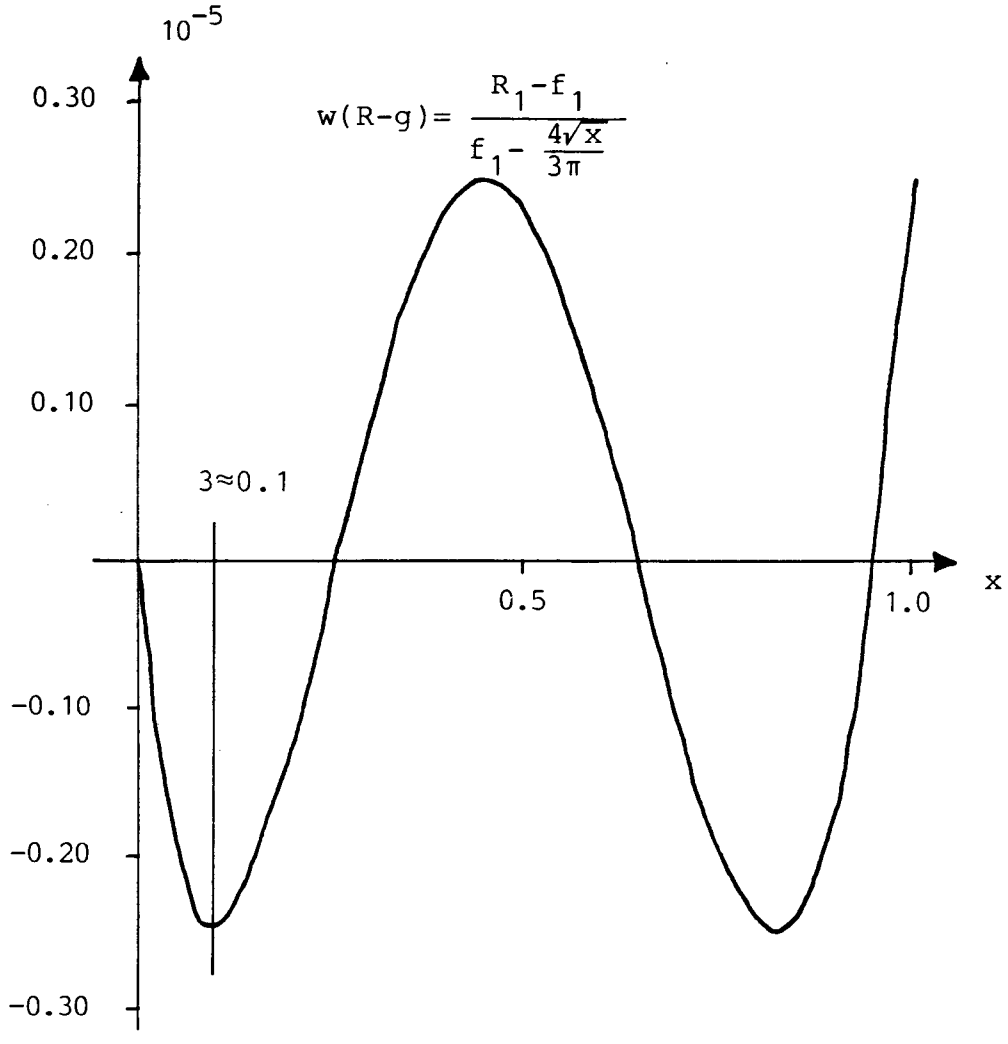


Fig. 15 The error curve

produces no smaller error and the final approximation is therefore chosen as

$$R_1 = \frac{1 + 0.383\ 901\ x + 0.017\ 108\ x^2}{1 + 0.258\ 952\ x} \quad .$$

The error curve is plotted in Figure 15. The curve has 4 alternations. Denote the x-coordinate of the first point of maximum error with $\beta$. Obviously the curve has four alternations on every interval $[\alpha,1]$ with $0 < \alpha \leq \beta$. The computed approximation is therefore the best approximation on every such interval according to (T1) and (T2). Then it must also be the best approximation on the interval $[0,1]$.

## 2.6 An inner-product space

In the space $C[a,b]$ of all continuous real-valued functions defined on the compact interval $[a,b]$ we define the inner product of two vectors f and g as

$$\langle f,g\rangle = \int_a^b f\cdot g\cdot w\cdot dx \quad ,$$

where $w(x)$ is a positive and integrable weight function. This is an inner-product space since the following postulates are fulfilled

(1) $\langle f,f\rangle > 0$ unless $f=0$,

(2) $\langle f,g\rangle = \langle g,f\rangle$,

(3) $\langle f,\lambda g+\mu h\rangle = \lambda\langle f,g\rangle + \mu\langle f,h\rangle$ .

In a linear space equipped with an inner-product the following equation defines a norm

$$\|f\| = \sqrt{\langle f,f\rangle} \quad .$$

The norm corresponding to our inner-product is then

$$\|f\| = \left[ \int_a^b f^2\cdot w\cdot dx \right]^{\frac{1}{2}} \quad .$$

A set of vectors $\{g_1, g_2, \ldots\}$ is orthonormal if

$$\langle g_i, g_j \rangle = \delta_{ij} ,$$

where $\begin{cases} \delta_{ij} = 1 & i = j \\ \delta_{ij} = 0 & i \neq j \end{cases}$ .

A useful theorem[16] of approximation is

(T3) Let $\{g_1, g_2, \ldots, g_n\}$ denote an orthonormal set in an inner-product space with norm defined by $\|h\| = \sqrt{\langle h,h \rangle}$ . The expression

$\|\sum_1^n c_i g_i - f\|$ will be minimum if and only

if $c_i = \langle f, g_i \rangle$ .

## 2.7 The Chebyshev polynomials

The Chebyshev polynomial of degree n on the interval [-1,1] is defined

$$\begin{cases} T_n(x) = \cos(n\Theta) & n = 0,1, \ldots \\ \cos(\Theta) = x & -1 \leq x \leq 1 . \end{cases}$$

The Chebyshev polynomials form an orthogonal set with respect to the weight function

$$w(x) = (1-x^2)^{-\frac{1}{2}} .$$

The following orthonormal set is easily formed

$$\left\{ \frac{1}{\sqrt{\pi}} T_0 , \frac{\sqrt{2}}{\sqrt{\pi}} T_1 , \frac{\sqrt{2}}{\sqrt{\pi}} T_2 , \ldots \right\}$$

and we may expand a given continuous function f into a series of Chebyshev polynomials:

$$S_n f = \sum_0^n{}' c_i T_i \qquad n = 0,1, \ldots ,$$

where

$$c_i = \frac{2}{\pi} \int_{-1}^{+1} f \cdot T_i \cdot w \cdot dx \quad .$$

The prime on the summation indicates that only half of the first term is used. According to (T3) $S_n f$ is the best approximation to f from the subspace spanned by $\{ T_0 , T_1 , \ldots , T_n \}$ with respect to the metric induced by this special weighted least-square norm. But $S_n f$ is also a nearly minmax polynomial approximation to f. Since this is an important aspect in numerical practice we cite the following theorem[18]. Let

$$E_n^m = \max_{a \le x \le b} |p_n^m(x) - f(x)| \ ,$$

$$E_n^\omega = \max_{a \le x \le b} |S_n f(x) - f(x)| \ ,$$

where $p_n^m(x)$ is the minmax polynomial approximation to f of degree n. Then

$$\text{(T4)} \quad \frac{E_n^\omega}{E_n^m} \le u(n) \qquad n=0,1, \ldots \quad .$$

The function u(n) is independent of f and the interval [a,b]. The value of u(n) for some n is given in Table 3. The asymptotic behaviour of u(n) is

$$u(n) \sim \frac{4}{\pi^2} \ln(n)$$

$$n \gg 1 \quad .$$

Table 3
The "worst case" ratio

| n | u(n) |
|---|---|
| 1 | 2.436 |
| 5 | 2.961 |
| 10 | 3.223 |
| 100 | 4.139 |
| 1000 | 5.070 |

## 2.8 Shifted Chebyshev polynomials

The basic range $-1 \leq x \leq 1$ is transformed to the range $0 \leq y \leq 1$ with the change of variable

$$y = \frac{x+1}{2} .$$

The Chebyshev polynomials then transform into shifted Chebyshev polynomials. The standard notation prescribes an asterisk:

$$T_n^*(y) = T_n(2y - 1) \qquad 0 \leq y \leq 1 .$$

The set $\left\{ \frac{1}{\sqrt{\pi}} T_0^* , \frac{\sqrt{2}}{\sqrt{\pi}} T_1^* , \frac{\sqrt{2}}{\sqrt{\pi}} T_2^* , \ldots \right\}$ is orthonormal on $[0,1]$ with respect to the weight function $[x(1-x)]^{-\frac{1}{2}}$. We may expand a given function according to (T3) and the analogue of (T4) is valid with the same function $u(n)$.

## 2.9 Truncation of an infinite power series

Let $f$ be analytic in a neighbourhood of $z = a$ and thus

$$f = \sum_{\nu=0}^{\infty} a_\nu (z - a)^\nu ,$$

with a positive radius of convergence $R$.
If $0 < r_1 < r_2 < R$ then

$$\lim_{\nu \to +\infty} |a_\nu r_2^\nu| = 0$$

and consequently

$$|a_\nu| < M\, r_2^{-\nu} \qquad \nu = 0, 1, \ldots .$$

We seek an upper bound to the minmax error when approximating $f$ by a truncation

$$f_n^t = \sum_{\nu=0}^{n} a_\nu (z-a)^\nu ,$$

within the circular disc $|z-a| \leq r_1$ .

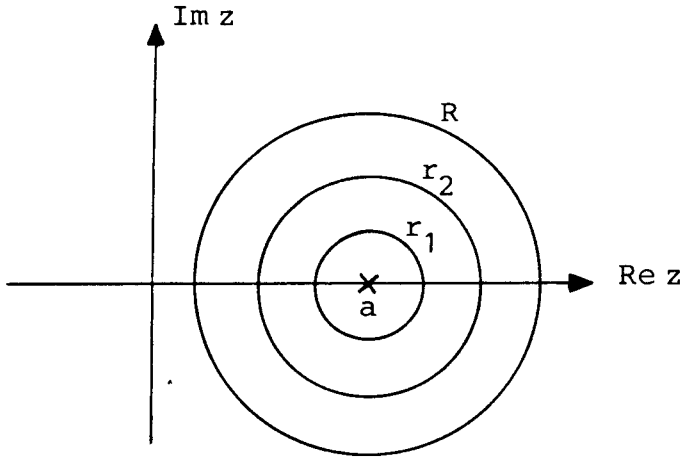


Fig. 16 A power series expansion

$$|e_n^t| = |f_n^t - f| = |\sum_{\nu=n+1}^{\infty} a_\nu (z-a)^\nu| < \sum_{\nu=n+1}^{\infty} M \left(\frac{r_1}{r_2}\right)^\nu =$$

$$= M \left(\frac{r_1}{r_2}\right)^{n+1} \sum_{\nu=0}^{\infty} \left(\frac{r_1}{r_2}\right)^\nu = M \left(\frac{r_1}{r_2}\right)^{n+1} \frac{1}{1 - \frac{r_1}{r_2}}$$

An upper bound for the error is evidently

$$|e_n^t| < M' \left(\frac{r_1}{r_2}\right)^{n+1} .$$

This is, of course, also a upper bound to the error

$$E_n^m = \max_{a - \frac{r_1}{2} \le x \le a + \frac{r_1}{2}} |f(x) - p_n^m(x)| ,$$

where $p_n^m(x)$ is the minmax polynomial of degree n.

## 2.10 A numerical example of expansion into series of Chebyshev polynomials

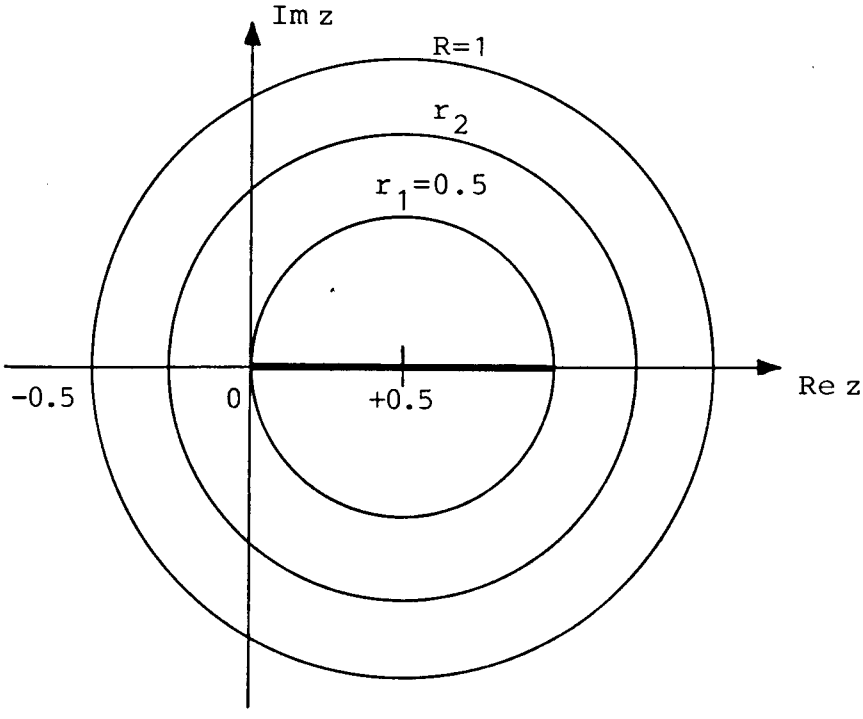


Fig. 17 The function $f_1$ is analytic within a certain circular area

The function

$$f_1(z) = \frac{1}{\sqrt{1+z}} \quad {}_2F_1(\tfrac{5}{2},\tfrac{1}{2};2;\tfrac{z}{1+z})$$

is analytic within the circular disc $|z - \frac{1}{2}| < 1$. We intend to approximate $f_1(x)$ on the real interval [0,1]. See Figure 17. According to the preceeding paragraph the minmax polynomial error $E_n^m$ is less than

$$M' \left(\frac{r_1}{r_2}\right)^{n+1} .$$

The error $E_n^m$ is obviously decreasing at a geometric rate or perhaps faster. The asymptotic "worst case" relation between this error and the Chebyshev expansion error $E_n^\omega$ is as previously given

$$E_n^{\omega} \sim E_n^{m} \quad \frac{4}{\pi^2} \ln(n) \ .$$

Thus we have at least an asymptotic upper bound for the rate of convergence when expanding $f_1$ into a series of Chebyshev polynomials. The actual rate of convergence is probably substantially better as Table 4 suggests. The "worst case" ratio $E_n^{\omega}/E_n^{m}$ is given in the fourth column. The Chebyshev coefficients are given in Table 1 in the article. The last two paragraphs lead us to the following conclusion. Rapid convergence is in a sense guaranteed when expanding an analytic function into a series of Chebyshev polynomials. A sufficient condition is that the interval in question is well inside a circular area in which the function is holomorphic (i.e. analytic at every point).

| n | $E_n^{\omega}$ | $E_n^{m}$ | u(n) |
|---|---|---|---|
| 0 | $0.58\ 10^{-1}$ | $0.56\ 10^{-1}$ | 2 |
| 1 | $0.14\ 10^{-2}$ | $0.13\ 10^{-2}$ | 2.436 |
| 2 | $0.83\ 10^{-4}$ | $0.77\ 10^{-4}$ | 2.642 |
| 5 | $0.65\ 10^{-7}$ | $0.58\ 10^{-7}$ | 2.961 |
| 9 | $0.14\ 10^{-10}$ | $0.12\ 10^{-10}$ | 3.183 |

Table 4 The rate of convergence

## References

[1] - [10] See the article, pp. 8-9

[11] E.B. Rosa, "Calculation of the self-inductance of single-layer coils", Bull. of the Bureau of Standards, pp. 161-187, 1906

[12] E.B. Rosa and F.W. Grover, "Formulas for Mutual and Self-Inductance", Bull. of the Bureau of Standards, pp. 116-124, 1912

[13] F.W. Grover, "Additions to Inductance Formulas", Bull. of the Bureau of Standards, pp. 551-555, 1918

[14] C. Snow, "Formula for the inductance of a helix made with wire of any section", Sci. Pap. of the Bureau of Standards, vol. 21, pp. 476-477, 1926

[15] F.W. Grover, "The calculation of the inductance of single-layer coils and spirals wound with wire of large cross-section", Proc. of IRE, vol. 17, pp. 2053 - 2063, 1929

[16] E.W. Cheney, "Introduction to Approximation Theory", New York, McGraw-Hill, 1966, pp. 3-15, pp. 153-165

[17] J.R. Rice, "The Approximation of Functions", Addison-Wesley, 1964, pp. 74-80

[18] M.J.D. Powell, "On the maximum errors ... ", Computer Journal, vol 9., pp. 404-407, 1966

[19] E. Hallén, "Electromagnetic theory", London, Chapman & Hall, 1962

[19] E. Hallén, "Elektricitetslära", Stockholm, 1968