LUND UNIVERSITY

Waste Heat Recovery System for Fuel Cell System

Lin, Wamei; Yuan, Jinliang; Sundén, Bengt

2010

Link to publication

Citation for published version (APA):
Lin, W., Yuan, J., & Sundén, B. (2010). *Waste Heat Recovery System for Fuel Cell System*. Paper presented at International Green Energy Conference, Waterloo, Ontario, Canada.

Total number of authors:
3

General rights
Unless other specific re-use rights are stated the following general rights apply:
Copyright and moral rights for the publications made accessible in the public portal are retained by the authors and/or other copyright owners and it is a condition of accessing publications that users recognise and abide by the legal requirements associated with these rights.
• Users may download and print one copy of any publication from the public portal for the purpose of private study or research.
• You may not further distribute the material or use it for any profit-making activity or commercial gain
• You may freely distribute the URL identifying the publication in the public portal

Read more about Creative commons licenses: https://creativecommons.org/licenses/

Take down policy
If you believe that this document breaches copyright please contact us providing details, and we will remove access to the work immediately and investigate your claim.

LUND UNIVERSITY

PO Box 117
221 00 Lund
+46 46-222 00 00

WASTE HEAT RECOVERY FOR FUEL CELL SYSTEM

Wamei Lin, Jinliang Yuan, Bengt Sundén*
Dept. of Energy Sciences, Faculty of Engineering,
Lund University, Box 118, 22100 Lund, Sweden
*Corresponding email: Jinliang.yuan@energy.lth.se

ABSTRACT

Fuel cell systems have high electrical efficiency and low environmental impact. But they release about half of total energy of fuel as heat to the cooling system and exhaust gas. Recovering the waste heat in the fuel cell systems might increase the system efficiency. In this paper, three different methods are outlined and discussed for the heat recovery in the fuel cell systems. The first method is to use waste heat from the fuel cell systems for fuel reforming processes. No or less additional heat is required to reform methanol or other hydrocarbons to get hydrogen for the fuel cell systems. The second method is to combine gas turbine with high temperature fuel cell stack, e.g., solid oxide fuel cells, whose working temperature is about 600 ℃ to 1000 ℃. Due to high temperature waste gases, the gas turbine can be employed to produce extra electricity. Thus the net electrical efficiency in the fuel cell systems can increase greatly. The third option is to combine heat and power generation in the fuel cell systems for residential use. The introduced waste heat recovery systems are offering a starting point for future research in the topic. The balances between efficiency and cost, complexity, and feasibility, have to be carefully estimated.

Keywords: Fuel cell systems, heat recovery, fuel reforming, gas turbine, heat and power.

1 INTRODUCTION

Fuel cell technologies have become important in the energy production society. They are considered to be very attractive power generation systems, due to the high efficient electricity generation and the low environmental impact. There are some different kinds of fuel cell systems, according to the different electrolyte material and working temperature. Operated at high temperatures, there are solid oxide fuel cells (SOFCs) and molten carbonate fuel cells (MCFCs). The working temperature of SOFC is between 600 and 1000 ℃ and its electrolyte is made from zirconia doped with yttria. While the working temperature of MCFC is around 650 ℃, its electrolyte consists of liquid (molten) carbonate, which is a negative ion and an oxidizing agent. For low temperature case, there is proton exchange membrane (PEM) fuel cell, whose working temperature is around 80 ℃ and the electrolyte is a proton-conducting polymer membrane.

According to the fuel cell system energy distribution, about 50% fuel energy is converted to electricity. The rest 50% is lost as heat removed by cooling systems and exhaust gas. In [1] a Ballard Generation System was presented, and its characteristics are shown in Table 1. The thermal energy was 854600 kJ/h (237.4 kW), which was at the same level of the power capacity (250 kW) of the system. In [2] a liquid cooling system was used to the phosphoric acid fuel cell systems. The energy distribution is shown in Fig. 1. 41.7% of the input fuel energy became electric power. While 26.8% was lost by the stack exhaust and 22.8% was taken away by the radiator. In other words, about 50% of fuel energy was lost as waste heat.

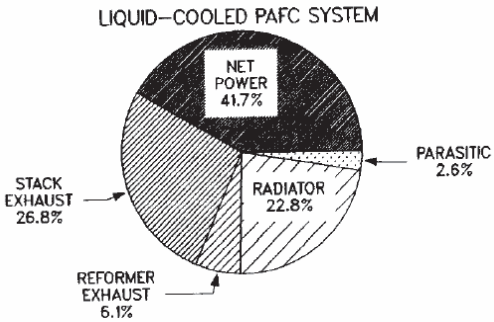

Fig. 1. Energy distribution in phosphoric acid fuel cell systems [2].

Table 1. Ballard Generation System characteristics [1].

Power Capacity	250 kW with natural gas fuel
Electric Efficiency	40% LHV
Thermal Energy	854,600 kJ/hour at 74 ℃
Plant Dimensions	2.4 m wide by 2.4 m high by 5.7 m long
Plant Weight	12,100 kg

But in the fuel cell society, many researchers put their attention to improve the electricity efficiency of the fuel cell systems. Only a little attention is given to the research on waste heat utilization or recovery in fuel cell system. If the waste heat (important part of fuel energy) is reused, then the energy efficiency of the fuel cell system would be increased a lot.

Thus in this paper, we focus on how to reuse the waste heat from the fuel cell systems. According to the literature survey, some methods are summarized and discussed for the energy recovery in fuel cell systems, such as: (1) The waste heat is used for hydrogen reforming processes. This method is feasible not only for the high temperature fuel cells but also for the low temperature fuel cells. (2) Combining the waste heat with a gas turbine or micro gas turbine is a good option for the high temperature fuel cell systems. (3) A combined heat and power system (CHP) is suggested for places where fuel cell system needs not only to supply electricity but also to provide heat. These three methods will be highlighted in section 2, 3, and 4 respectively. In section 5 the application/challenges for different recovery systems will be given. The conclusion will be drawn in section 6.

2 WASTE HEAT FOR FUEL REFORMING

For the different fuel cell systems, one ideal fuel is hydrogen. But in reality it is difficult to get the pure hydrogen. Reformatted methanol or other hydrocarbons (gasoline or diesel fuel) can be a feasible option for the pure hydrogen based fuel cell systems. The fuel reforming process mainly includes: steam reforming, partial oxidation and autothermal reforming. But one of the drawbacks in the reformate-based fuel cell systems is that, a large amount of heat is needed for the fuel processing. The thermal energy requirement for a reformer can be estimated by using Eq. (1).

$$\Delta H_{tot} = \Delta H_{rxn} + \Delta H_{vap} + \Delta H_{cp} + \Delta H_{loss} \quad (1)$$

where, ΔH_{rxn} is the enthalpy change of reforming reaction; ΔH_{vap} the enthalpy change of vaporization of the liquid feedstock; ΔH_{cp} the enthalpy change required to heat the vaporized feedstock to the reforming temperature; and ΔH_{loss} the heat lost to the ambient which could be minimized with adequate insulation. It was estimated that a big heating value (equivalent to that of about 20-30% of the hydrogen produced in the reformer) was needed to meet the heating requirement of the reformer [3].

A large amount of heat is needed for the fuel processing purpose in fuel cell systems. The heat is usually provided through the combustion of the remaining hydrogen/hydrocarbons in the exhaust gases from the fuel cell anodes, burning the hydrogen/hydrocarbons in the byproduct streams of the reformer, or consumption of additional hydrocarbon fuel other than that being reformed in the reformer. It is evident that the energy input to the reformer must be reduced if the efficiency of a fuel cell power plant is to be increased. Using the waste heat in the fuel cell systems for the fuel reforming processes can reduce the energy input. It means that the system efficiency would increase.

2.1 High temperature fuel cell systems

High temperature fuel cell systems include SOFCs and MCFCs. Their operating temperatures range from as low as 600 ℃ to above 1000 ℃. The high working temperature fuel cell systems have their own disadvantages: (1) High fabrication costs; (2) High cost metallic materials for interconnects and electrode catalysts; (3) Thermal stress of the fuel cell components reduces the lifetime of the fuel cell system. But the high temperature is also an advantage, because the high level energy of exhaust gases can be used for fuel reforming processes.

Cresswell et al. [4] integrated the SOFCs with the MTH (methylcyclohexane, toluene, hydrogen) hydrogen-carrier system. The energy integration is shown in Fig. 2. The exhaust gas in SOFCs was at very high temperature. It was used to drive fuel pretreatment. In this system, an overall electricity of 10.04 kW was produced, when the input power for air compression was 1.04 kW. Without the energy recovery contribution from the fuel cell exhaust gas, the overall electricity was only 7.61 kW. In this case, the overall efficiency was reduced by 25%. The results also showed that, the overall efficiency of the SOFC-MTH system was much higher than the efficiency of the methanol/PEM fuel cell system, because the high temperature exhaust stream promoted an efficient energy integration.

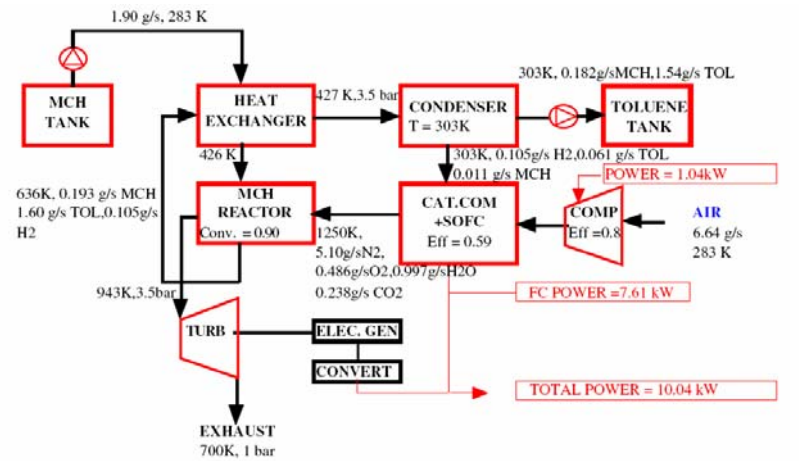

Fig. 2. Mass flows and temperatures around the "base-case" flowsheet [4].

The benefits of combining high-temperature SOFCs with low-temperature PEM fuel cells are very huge. Due to the internal reforming ability of the SOFCs, not only the electrical power can be produced from an SOFC stack, but also a stream of reformated gas can be obtained. Thus no reformer upstream of the PEM fuel cells is need, and the system efficiency is enhanced. Subramanyan et al. [5] gave a conceptual design of a SOFC-PEM fuel cell hybrid power plant, as shown in Fig. 3. The heat rejected by the fuel cell at higher temperature was used in a bottoming cycle to generate steam. Thus the high temperature SOFC was not only an electricity producer but also a fuel reformer for the low temperature PEM fuel cell. The exhaust from the PEM fuel cell went to a waste hydrogen burner and heat recovery steam generator which can produce steam for further utilizations. Based on an algorithm MINSOOP, a concept of multi-objective optimization (capital cost, overall efficiency and SOFC current density) was presented. This multi - objective optimization framework did show some favor in identifying the cost effective designs. But the uncertainty had a considerable effect on the objectives.

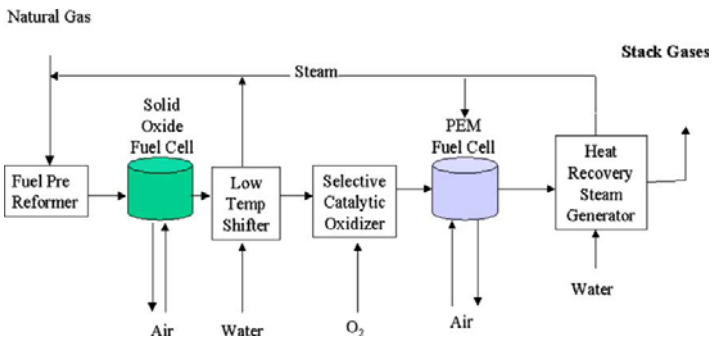

Fig. 3. SOFC-PEM hybrid fuel cell power plant [5].

On the other hand, Dick et al. [6] presented a system combining SOFCs and PEM fuel cells. The exhaust gas from an SOFC was supplied to a low-temperature PEM fuel cell. The results showed that the overall system efficiency was 61%, which was higher than that of a reformer-PEM system (37%-42%). The net electrical output of SOFC-PEM system was 489.7 kW, as shown in Table 2. From the cost point of view, the SOFC-PEM system had a significant financial benefit compared to the SOFC-only system and the reformer-PEM system. In Table 3, approximate estimates of the costs for these systems were given, when the power of these systems was 200 kW and the lifetime was 20 years. However, some factors had to be considered in the SOFC-PEM system. The first one was the distribution of the power output between the SOFC and PEM stacks. The second one was the effectiveness of the heat recovery processes within the system.

Table 2. Summary of SOFC-PEMFC system [6].

SOFC power (kW)	369.3
PEM power (kW)	146.7
Turbine power (kW)	100.3
Compressor power (kW)	-100.8
Net power output (kW)	515.5
Electrical output (kW)	489.7
Overall efficiency (%)	61

Table 3. Comparative system costs [6].

System type	SOFC-PEM	Reformer-PEM	SOFC
SOFC stack ($)	73000 (26000)		142000 (51000)
Reformer ($)		35000 (22000)	
PEM stacks ($)	11000 (7000)	21000 (13000)	
Fuel cost ($)	561000	855000	653000
Total ($)	645000	911000	795000

2.2 Low temperature fuel cells

The low temperature fuel cell includes proton exchange membrane (PEM) fuel cell, whose working temperature is around 80 ℃. Even though the working temperature is low, some literature studies showed that the waste heat from the low temperature fuel cell systems can be used for fuel reforming. Cao et al. [7] presented an energy recovery system for reformate-based PEM fuel cell systems, as shown in Fig. 4. There was a throttling valve, a heat exchanger, a compressor in this system. The feed stock of the fuel reformer was vaporized in the heat exchanger. Then it was compressed to a sufficiently high pressure before entering into the fuel reformer. It was found that, the power plant efficiency with the energy recovery system could be increased by more than 20% compared to the one without the energy recovery system. On the other hand, more than 25% of the waste heat generated by the fuel cell stack could be brought away because of the energy recovery system. Thus the radiator size could be reduced and the power of fan also would be reduced. Meanwhile, the fuel burned for the fuel reforming purpose was reduced by more than 70% because of the energy recovery system. This also reduced the environmental impact.

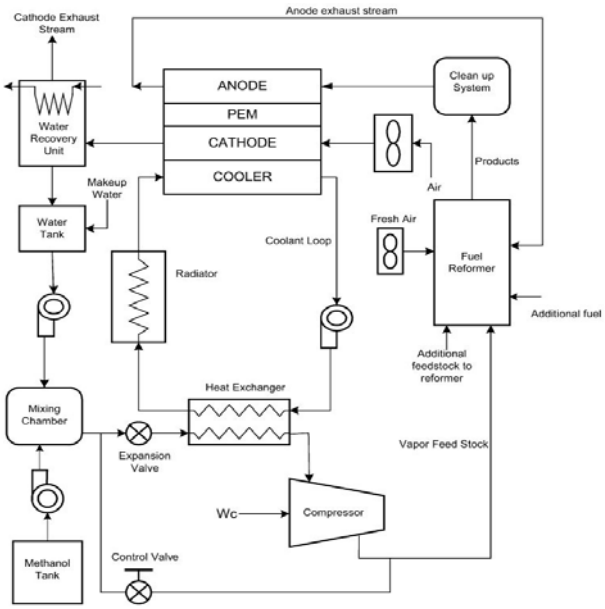

Fig. 4. Schematic of a fuel cell power plant incorporating the energy recovery system [7].

3 COMBINED SOFC WITH GAS TURBINE OR MICRO-GAS TURBINE

SOFC combined with a gas turbine was suggested in several studies [8-10]. The exhaust gas including un-reacted fuel from a fuel cell can be combusted and the thermal energy can be used for a thermal engine. The synergy effects of such systems can provide a very high electrical efficiency and a low environmental impact because of the utilization of the exhaust gas. Chan et al. [11] presented a natural gas-fed, hybrid solid oxide fuel cell-gas turbine (SOFC-GT) power-generation system based on the first law of thermodynamics. The structure of SOFC-GT system is shown in Fig. 5. The results showed that an internal-reforming hybrid SOFC-GT system would achieve an electrical efficiency of more than 60% and system efficiency (including waste heat recovery for co-generation) of more than 80%, with the net electrical power output of 2105.25 kW. While 731 kW power was from the waste heat recovered by the gas turbine, when the flow temperature was 393 K and the pressure was 1.34 bar. Thus the increase of the electrical efficiency was 21.06%. The detailed information is shown in table 3. On the other hand, increasing the operating pressure would improve the system efficiency (as shown in Fig. 6). But increasing the fuel flow-rate would cause the system efficiency to decrease. Palsson et al. [12] proposed a SOFC-GT system with external pre-reforming and recirculation of anode gases. With a power of 500 kW, the system electrical efficiencies could reach more than 65% at low pressure ratios. Meanwhile a parametric study was also carried out. It showed

that the efficiency was increased when the cell voltage or flow rates of the reactants were decreased, or when the inlet temperature of air was increased. In these cases, the fuel utilization of the cell was raised. Granovskii et al. [13] proposed two methods for a SOFC–GT system. The first method includes generation of the required steam in the coupled gas turbine cycle. The second one includes recycling some part of the exhaust gases for the anodes of the SOFC stack. According to the analysis, both methods can increase the energy efficiency of fuel cell system. But the method including a steam generation provides better performance for reducing the natural gas consumption in the fuel cell systems.

Table 4. Cell and system performance[11].

Cell voltage	0.738 V
Cell current density	141.6 mA cm^{-2}
Gas temperature at node 13	393 K
Gas pressure at node 13	1.34 bar
Stack temperature	1166 K
Compressor work (air side)	301 kW
Compressor work (fuel side)	26.6 kW
Net PT ac power output	381 kW
GT inlet temperature	1466 K
GT inlet pressure	6.46 bar
Waste heat recovery	731 kW
Electrical efficiency (LHV)	62.2 %
Total efficiency (LHV)	83.8 %

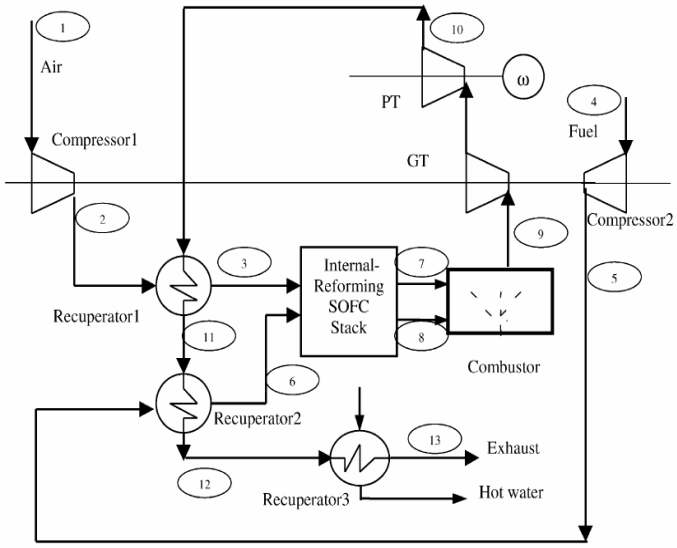

Fig. 5. Schematic of recuperated internal-reforming hybrid SOFC-GT system [11].

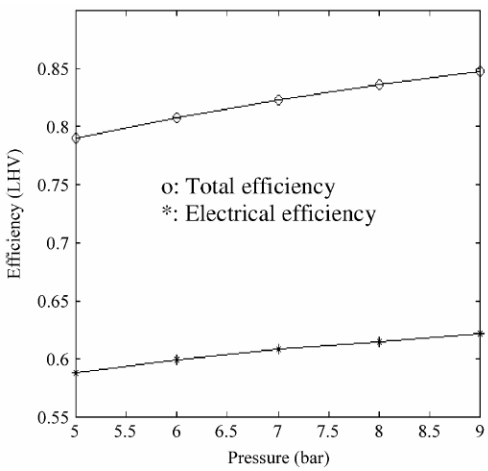

Fig. 6. Effect of pressure on system efficiency [11].

A SOFC-GT hybrid system is a good option for increasing the electrical efficiency of the fuel cell systems. Thus it has been considered as a competitive choice in the market of distributed/residential power supply and mobile applications. Based on different load demands, the SOFC-GT hybrid system should have capability to adjust its power output quickly. So part-load performance and operational stability/safety are important issues if the SOFC-GT hybrid system wants to have priority in commercialization. Chan et al. [14] studied the part-load operation of a power generation system composed of a SOFC-GT operating on natural gas. The simulation results showed that an internal reforming SOFC-GT hybrid system could get the net electrical and system efficiency (including waste heat recovery for steam generation) of greater than 60 and 80%, respectively, during the full-load operation. Because of the complicated interactions between different components and safety requirements, the part-load performance in an internal reforming SOFC-GT hybrid power plant was not as good as the full-load operation.

SOFC-GT hybrid system is used mostly in the large power plant due to the gas turbine, availability, and the SOFCs can be combined with micro gas turbine (MGT) system as well for the small-capacity power systems (SOFC-MGT). Campanari et al. [15] investigated the thermodynamic potential of the SOFC-MGT systems. In this system, a net electrical efficiency (LHV) could be about 65% when the electric power output was 250 kW. It was also possible to obtain high electric efficiency when the electrical output was reduced. Costamagna et al. [16] presented the design and off-design performance of a hybrid system coupling of a recuperated MGT (about 50 kW) with a SOFC stack (about 250 kW). At the design point, the efficiency of SOFC-MGT hybrid power plant could achieve more than 60%, and more than 50% at part load operation, as shown in Fig. 7. SOFC-MGT hybrid system is a very attractive option due to its high electrical efficiency. The performance of the hybrid system could still be improved if a low reforming temperature fuel was used. Cocco et al. [17] demonstrated that methanol was a very attractive fuel for SOFC-MGT hybrid systems, due to its low reforming temperature of methanol (250-300℃). The results showed that the SOFC-MGT efficiency would reduce a little when the methane (the efficiency was 64.4%) was replaced by the methanol (the efficiency was 63.6%) in the internal reforming. But for the external reforming, the SOFC-MGT hybrid system efficiency increased to 68.5% by using the methanol, and the power output was 579.1 kW. The raised efficiency in SOFC-MGT hybrid system was mostly because of the improved heat management and the high hydrogen partial pressure at the anode inlet.

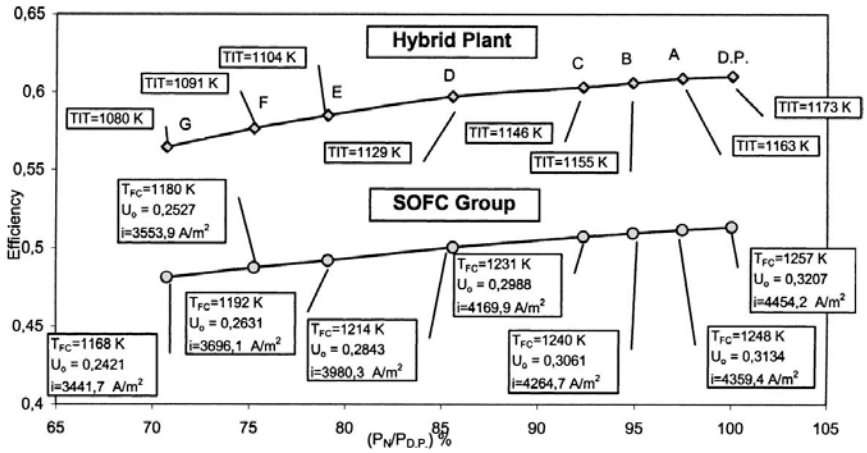

Fig. 7. Hybrid plant and SOFC group efficiencies vs. net non-dimensional plant power at fixed MGT rotational speed (85,000 rpm). T_{FC} (fuel cell temperature), U_0 (oxygen utilisation factor), *i* (current density) and TIT (turbine inlet temperature) are presented at the inset [16].

4 COMBINED HEAT AND POWER (CHP) SYSTEM

In certain cases as shown in Fig. 8, the fuel cell systems need to provide not only electricity but also heat. If the heat is provided by the electricity produced in fuel cell systems, the energy efficiency of the fuel cell systems can not reach a very high level. The waste heat of fuel cell systems directly to the customers who need heat can be a good option to get a high energy efficiency. So the CHP is a very effective method to use the energy in the fuel cell systems, when both the electricity and heat are needed. Colella [18] focused on a fuel cell system not only about electrical efficiency but also about thermal efficiency. As claimed the fuel cell systems can achieve a heat-to-power ratio rapidly in a CHP. Not much technique was required for the engineering efforts on refining the fuel cell stack electrical efficiency. But more technique was demanded for the system design which included combining electrical and thermal issues. Further more Colella [19] carried out a case study of the United Kingdom for implications of electricity liberalization for CHP fuel cell systems. After the analysis of the negative consequences and the potential positive effects in the UK's liberlized model, it was found that flexible and reliable were important for the embedded generators design (CHP fuel cell systems). Colella [20] also studied a 6 kW CHP fuel cell system and proposed some important parameters for CHP fuel cell systems: (1) an ability to vary the electrical loads rapidly,

(2) an ability to vary the heat to power ratio during operation, and (3) an ability to deliver the waste heat to a useful thermal sink. These parameters were important for the financial and environmental effect of CHP fuel cell systems. More discussion can be found in [21-24].

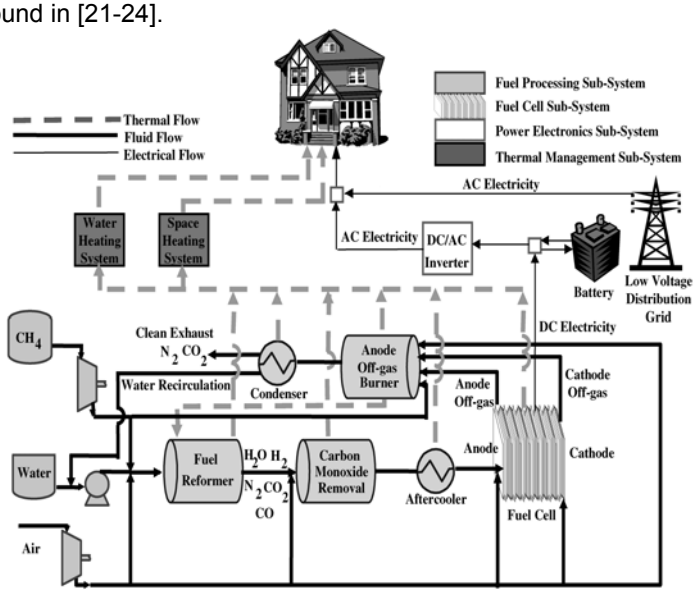

Fig. 8. Schematic diagram of one of type of combined heat and power (CHP) fuel cell system [18].

The CHP technique is favorable for residential applications. But the cost of this kind of system is the major obstacle for the implementation of CHP in fuel cell systems. Colella [25] carried out the financial and environmental analysis for a distributed 200 kW CHP fuel cell system on the Stanford University campus. It was found that, the CHP fuel cell systems had low emissions and saved 73 million dollars for the university over 20 years when the environmental incentives were included. Hengeveld [26] gave a economic analysis of a stationary CHP MCFC. The results showed that every year 240,044 dollar was spent for a CHP MCFC with 1000 kW capacity, and 63,723 dollar was used for the one with 250 kW capacity. It was not economically feasible currently for the CHP fuel cell systems, even though there were heat recovery and emission reduction in these systems. The increased costs of natural gas usage, maintenance charges and water/sewer usage went against the economical feasibility of CHP fuel cell systems.

5 APPLICATION/CHALLENGES FOR DIFFERENT RECOVERY SYSTEMS

The fuel cell systems can be applied to different applications. The major applications are stationary electric power plants, distributed generation, vehicle motive power, space and other closed environment power, auxiliary power systems and so on [1].

The method of waste heat used for fuel reforming process can be suitable for the vehicle motive power application. The major reason is that, the pure hydrogen is rare and much expensive currently. But the natural gas is affluent and economic. Instead of using pure hydrogen, reforming the natural gas is a good choice for fuel cell vehicles. Another important reason is that, because of the low density of hydrogen it is difficult to store the hydrogen during the transportation. But there are also some challenges for this method. Due to the space limitation in vehicles, the waste heat recovery system should have high compactness.

On the other hand, the SOFC-GT systems are suitable for the stationary electric power plants based on its high electrical efficiency. It is also favorable in distributed/residential power supply and mobile applications. While the CHP method is suitable for the distributed generation, such as hospitals, manufacturing plants, restaurants, and banking facilities. The thermal energy can be used directly for heating or cooling, instead of dissipating to the environment. But the cost of CHP system is very high [26]. Reducing the cost of CHP system would promote this application.

6 CONCLUSIONS

Fuel cell systems can effectively provide electricity with very low environment impacts. Instead of focusing on improving the electricity efficiency in fuel cell stacks, much attention should be given to reuse of the waste heat. By recovering the waste heat in fuel cell systems, the efficiency of fuel cell system increases significantly.

There are some useful methods to recover the waste heat in fuel cell systems:

(1) The waste heat can be used for fuel reforming processes. the overall efficiency of fuel cell systems can achieve around 60%. This method can be used to transport applications. But the compactness should be considered due to the space limitation in vehicles.
(2) The solid oxide fuel cell systems can be combined with gas turbine or micro gas turbine. A net electrical efficiency can be greater than 60% and the system efficiency greater than 80%. This method is favorable in stationary electric power plants.
(3) The combined heat and power in fuel cell systems is a good option for the distributed generation application. The system cost is the major issue blocking the implementation of this method.

The major goal of different methods in recovering the waste heat in fuel cell system is to increase the energy conversion efficiency. In choosing different methods, it is important to consider: application, technique, efficiency, cost and so on.

ACKNOWLEDGEMENT
The authors acknowledge the supports from the Swedish Research Council (VR).

REFERENCES
[1] 2004, *Fuel Cell Handbook*. EG&G Technical Services, Inc.

[2] Kumar, R., Krumpelt, M., Misra, B., 1989, Fuel cells for vehicle propulsion applications: a thermodynamic systems analysis. *Energy Conversion Engineering Conference, 1989. IECEC-89. Proceedings of the 24th Intersociety* 3: 1601-1606.

[3] Edlund, D.J., Pledger, W.A., 1999, Steam reformer with internal hydrogen purification. US Patent 5, 997,594.

[4] Cresswell, D.L., Metcalfe, I.S., 2006, Energy integration strategies for solid oxide fuel cell systems. *Solid State Ionics* 177: 1905-1910.

[5] Subramanyan, K., Diwekar, U.M., Goyal, A., 2004, Multi-objective optimization for hybrid fuel cells power system under uncertainty. *Journal of Power Sources* 132: 99-112.

[6] Dicks, A.L., Fellows, R.G., Mescal, C.M., Seymour, C., 2000, A study of SOFC-PEM hybrid systems. *Journal of Power Sources* 86: 501-506.

[7] Cao, Y.D., 2005, Analysis of an energy recovery system for reformate-based PEM fuel cells involving a binary two-phase mixture. *Journal of Power Sources* 141: 258-264.

[8] Chan, S.H., Ho, H.K., Tian, Y., 2003, Multi-level modeling of SOFC–gas turbine hybrid system, *International Journal of Hydrogen Energy* 28: 889-900.

[9] Lisbona, P., and Romeo, L. M., 2008, Enhanced coal gasification heated by unmixed combustion integrated with an hybrid system of SOFC/GT. *International Journal of Hydrogen Energy* 33: 5755-5764.

[10] Arsalis, A., 2008, Thermoeconomic modeling and parametric study of hybrid SOFC-gas turbine-steam turbine power plants ranging from 1.5 to 10 MWe. *Journal of Power Sources* 181: 313-326.

[11] Chan, S.H., Ho, H.K., Tian, Y., 2002, Modelling of simple hybrid solid oxide fuel cell and gas turbine power plant. *Journal of Power Sources* 109: 111-120.

[12] Palsson, J., Selimovic, A., Sjunnesson, L., 2000, Combined solid oxide fuel cell and gas turbine systems for efficient power and heat generation. *Journal of Power Sources* 86: 442-448.

[13] Granovskii, M., Dincer, I., Rosen, M. A., 2007, Performance comparison of two combined SOFC-gas turbine systems. *Journal of Power Sources* 165: 307-314.

[14] Chan, S.H., Ho, H.K., Tian, Y., 2003, Modelling for part-load operation of solid oxide fuel cell-gas turbine hybrid power plant. *Journal of Power Sources* 114: 213-227.

[15] Campanari, S., 2000, Full load and part-load performance prediction for integrated SOFC and microturbine systems, Journal of Engineering for Gas Turbines and Power, 122: 239-246.

[16] Costamagna, P., Magistri, L., Massardo, A.F., 2001, Design and part-load performance of a hybrid system based on a solid oxide fuel cell reactor and a micro gas turbine. *Journal of Power Sources* 96: 352-368.

[17] Cocco, D., Tola, V., 2007, Comparative Performance Analysis of Internal and External Reforming of Methanol in SOFC-MGT Hybrid Power Plants. *Journal of Engineering for Gas Turbines and Power* 129: 478-487.

[18] Colella, W., 2002, Design options for achieving a rapidly variable heat-to-power ratio in a combined heat and power (CHP) fuel cell system (FCS). *Journal of Power Sources* 106: 388-396.

[19] Colella, W., 2002, Implications of electricity liberalization for combined heat and power (CHP) fuel cell systems (FCSs): a case study of the United Kingdom. *Journal of Power Sources* 106: 397-404.

[20] Colella, W.G., 2003, Modelling results for the thermal management sub-system of a combined heat and power (CHP) fuel cell system (FCS). *Journal of Power Sources* 118: 129-149.

[21] Lokurlu, A., Grube, T., Hohlein, B., Stolten, D., 2003, Fuel cells for mobile and stationary applications—cost analysis for combined heat and power stations on the basis of fuel cells. *International Journal of Hydrogen Energy* 28: 703-71.

[22] Colella, W. G., 2003, Design considerations for effective control of an afterburner sub-system in a combined heat and power (CHP) fuel cell system (FCS). *Journal of Power Sources* 118: 118-128.

[23] Nanaeda, K., Mueller, F., Brouwer, J., Samuelsen, S., 2010, Dynamic modeling and evaluation of solid oxide fuel cell - combined heat and power system operating strategies. *Journal of Power Sources* 195: 3176-3185.

[24] Scheffler, J., 2001, Operation of low voltage distribution networks with decentralised combined heat and power fuel cell systems for residential application. *Transmission and Distribution Conference and Exposition* 2: 759-763.

[25] Colella, W. G., Niemoth, C. R., Lim, C. Y., Hein, A. Ph., 2005, Evaluation of the financial and environmental feasibility of a network of distributed 200 kWe combined heat and power fuel cell systems on the Stanford University campus. *Fuel Cell* 5: 148-166.

[26] Hengeveld, D. W., and Revankar, S. T., 2007, Economic analysis of a combined heat and power molten carbonate fuel cell system. *Journal of Power Sources* 165: 300-306.