LUND UNIVERSITY

The MAX IV Synchrotron Light Source

Eriksson, Mikael; Ahlbäck, Jonny; Andersson, Åke; Johansson, Martin; Kumbaro, Dionis; Leemann, Simon; Lenngren, Claes; Lilja, Per; Lindau, Filip; Lindgren, Lars-Johan; Malmgren, Lars; Modéer, Jonas; Lindvall, Robert; Sjöström, Magnus; Tagger, Jüri; Fernandes Tavares, Pedro; Thorin, Sara; Wallén, Erik; Werin, Sverker; Anderberg, Bengt; Dallin, Les

Published in:
[Host publication title missing]

2011

Link to publication

Citation for published version (APA):
Eriksson, M., Ahlbäck, J., Andersson, Å., Johansson, M., Kumbaro, D., Leemann, S., Lenngren, C., Lilja, P., Lindau, F., Lindgren, L.-J., Malmgren, L., Modéer, J., Lindvall, R., Sjöström, M., Tagger, J., Fernandes Tavares, P., Thorin, S., Wallén, E., Werin, S., ... Dallin, L. (2011). The MAX IV Synchrotron Light Source. In *[Host publication title missing]* (pp. 3026-3028) http://accelconf.web.cern.ch/AccelConf/IPAC2011/papers/thpc058.pdf

Total number of authors:
21

General rights
Unless other specific re-use rights are stated the following general rights apply:
Copyright and moral rights for the publications made accessible in the public portal are retained by the authors and/or other copyright owners and it is a condition of accessing publications that users recognise and abide by the legal requirements associated with these rights.
• Users may download and print one copy of any publication from the public portal for the purpose of private study or research.
• You may not further distribute the material or use it for any profit-making activity or commercial gain
• You may freely distribute the URL identifying the publication in the public portal

Read more about Creative commons licenses: https://creativecommons.org/licenses/

Take down policy
If you believe that this document breaches copyright please contact us providing details, and we will remove access to the work immediately and investigate your claim.

LUND UNIVERSITY

PO Box 117
221 00 Lund
+46 46-222 00 00

Download date: 12. Oct. 2024

THE MAX IV SYNCHROTRON LIGHT SOURCE

M. Eriksson, J. Ahlbäck, Å. Andersson, M. Johansson, D. Kumbaro, S.C. Leemann, C. Lenngren, P. Lilja, F. Lindau, L.-J. Lindgren, L. Malmgren, J. Modeér, R. Nilsson, M. Sjöström, J. Tagger, P. F.Tavares, S. Thorin, E. Wallén, S. Werin, MAX IV Laboratory, Lund, Sweden
B. Anderberg, Amacc, Uppsala, Sweden
Les Dallin, CLS, Saskatoon, Canada

Abstract

The MAX IV synchrotron radiation facility is currently being constructed in Lund, Sweden. It consists of a 3 GeV linac injector and 2 storage rings operated at 1.5 and 3 GeV respectively. The linac injector will also be used for the generation of short X-ray pulses. The three machines mentioned above are described with some emphasis on the effort to create a very small emittance in the 3 GeV ring. Some unconventional technical solutions will also be presented.

DESIGN PHILOSOPHY

When designing the MAX IV facility [1], the following assumptions were made:

- Storage rings will remain the workhorses as light sources for the foreseeable future.
- The ring emittance can be reduced towards the diffraction limit.
- FELs will open up new research areas.

The MAX IV design [1] result is shown below. It consists of a 3 GeV S-band injector linac and 2 storage rings operated at different electron energies to cover a broad spectral range. The linac will also be used to feed a Short Pulse Facility (SPF) and could eventually feed a FEL at a later stage. The technical solutions are characterized by a high degree of technical integration as will be seen below.

The storage rings are operated at 3 GeV and 1.5 GeV respectively. Two copies of the 1.5 GeV ring will be built, one will be placed in Lund and the other will be placed in Krakow [2] in cooperation with the Solaris staff.

To reduce electron beam emittance in the 3 GeV ring, the 7-bend achromat concept [3] was followed.

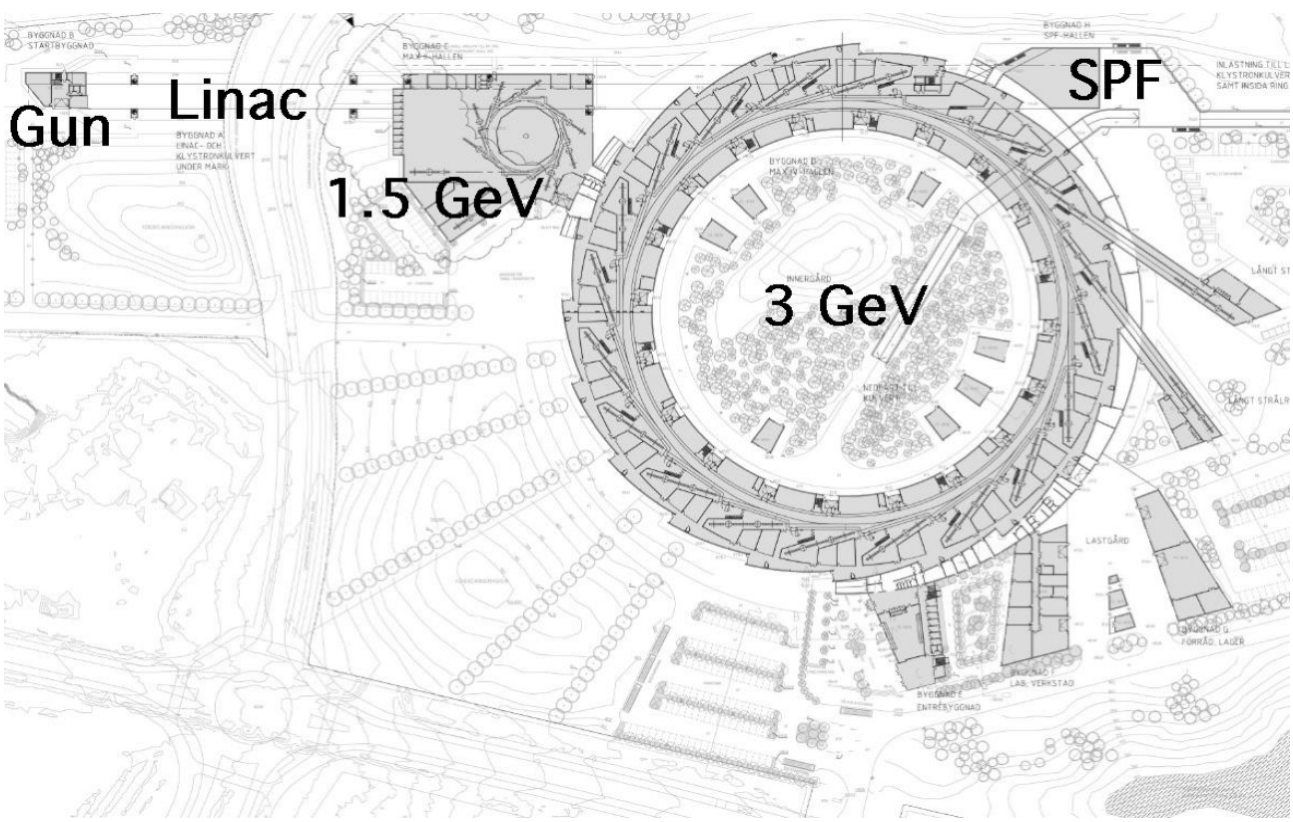

Figure 1: The MAX IV facility.

Copyright © 2011 by IPAC'11/EPS-AG — cc Creative Commons Attribution 3.0 (CC BY 3.0)

THE LINEAR ACCELERATOR

The S-band linac is operated at a relatively low accelerator gradient of some 15 MeV/m to reduce the operational cost. Each accelerating unit consists of a 35 MW klystron operated at a lower power of 25 MW to introduce energy redundancy.

The linac is described in more detail in refs. [4,5,6].

Table 1: Linac Parameters (SPF/Injector)

Operating energy	3.0 GeV
Max energy	3.7 GeV
Charge/bunch	0.1 nC
Bunches/train	1/3
Max rep rate	100 Hz
Bunch length (FWHM)	30-100 fs/3 ps
Peak current	3 kA/30 A

THE 3 GEV RING

The 7-bend achromat was chosen to get a small horizontal emittance. This type of magnet lattice is highly stable since the driving terms, introduced by the chromaticity correcting sextupoles, can be almost cancelled within the achromat itself, despite the strong sextupoles necessary to correct the chromaticity in a lattice with small dispersion functions. There is a sufficient number of sextupole families with proper betatron phase shifts between the sextupoles to carry out this minimisation process, which is greatly simplified by the usage of the lattice code OPA [7]. The situation is further improved by the introduction of octupole magnets, which decrease amplitude-dependent tune-shifts [8,9, 10].

20 achromats are used for achieving a sufficient number of straight sections for the insertion devices (IDs) and to get an ultralow electron beam emittance. Since the dipole fields are weak, the IDs reduce the lattice emittance considerably.

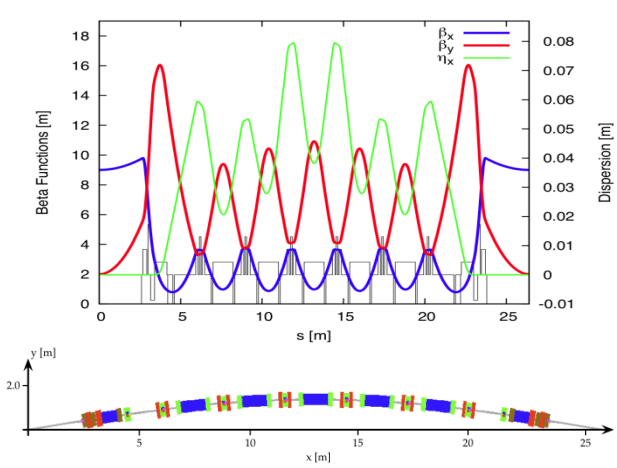

Figure 2: 3 GeV ring achromat and machine functions.

Table 2: 3 GeV Ring Parameters

Operating energy	3 GeV
Circulating current	0.5 A
Circumference	528 m
Horizontal emittance naked lattice	0.33 nm rad
Horizontal emittance incl IDs	0.23 nm rad
Coupling	0.5-3%
Beam total lifetime	10 h
Qx, Qy	42.20, 14.28
ξx, ξy (natural)	-50.0, -50.2
Mom comp factor	3.07×10^{-4}
Momentum acceptance	4.5 %

Magnets

The same magnet technology as applied in the MAX III ring [11] is used for the both MAX IV rings. Several magnets functions are machined from the same solid iron block as seen in Fig 3. This method allows for a high degree of compactness and internal alignment precision.

The iron magnets blocks are mounted on concrete girders as seen in Fig 3.

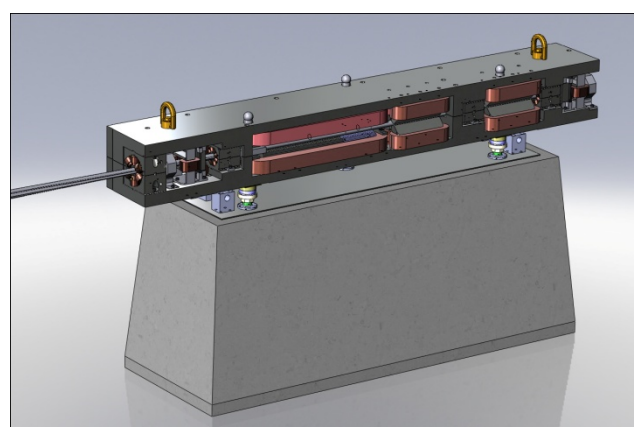

Figure 3: A MAX IV 3 GeV magnet cell. This cell contains 1 dipole, 2 quadrupole, 1 sextupole and 3 octupole magnets plus two dipole corrector pairs and two BPM heads. The iron block length is 1.8 m.

Vacuum System

The vacuum system is of the NEG-coated type. It therefore pumps linearly and performance is thus not hampered by the poor vacuum conductance imposed by the small vacuum chamber bore. In principle, the vacuum system consists of a NEG-coated Cu tube with a bore radius of 11 mm and a cooling channel attached on its outside. The heat absorber design is furthermore simplified since the dipole synchrotron radiation is distributed along the tube so only a few lumped absorbers are needed.

Copyright © 2011 by IPAC'11/EPS-AG — cc Creative Commons Attribution 3.0 (CC BY 3.0)

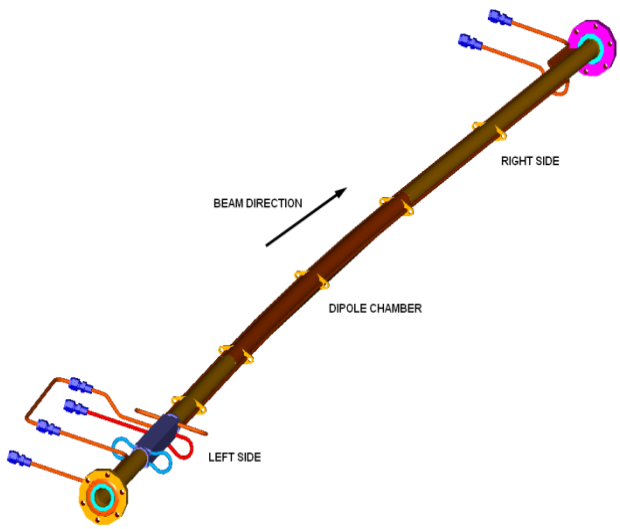

Figure 4: Dipole vacuum chamber.

THE 1.5 GEV RING

Two identical 1.5 GeV storage rings are being built, one will be placed at MAX IV and one will be placed at Solaris in Krakow.

There will be 12 Double Bend Achromats (DBAs) in each of the 1.5 GeV rings. The machine functions for one DBA are shown in Fig 5. Three quadrupoles take care of the horizontal focusing while focusing in the vertical direction is handled by gradients in the dipoles.

The magnet technology chosen for the 3 GeV ring is followed for the 1.5 GeV ring as well. The ring parameters are given in Table 3.

Table 3: 1.5 Gev Ring Parameters

Operating energy	1.5 GeV
Circulating current	0.5 A
Circumpherence	96 m
Horizontal emittance (bare lattice)	6 nm rad
Coupling	0.5-5%
Qx, Qy	11.22, 3.14
ξx, ξy (natural)	-22.9, -17.1
Mom comp factor	3.04×10^{-3}
Momentum acceptance	3%

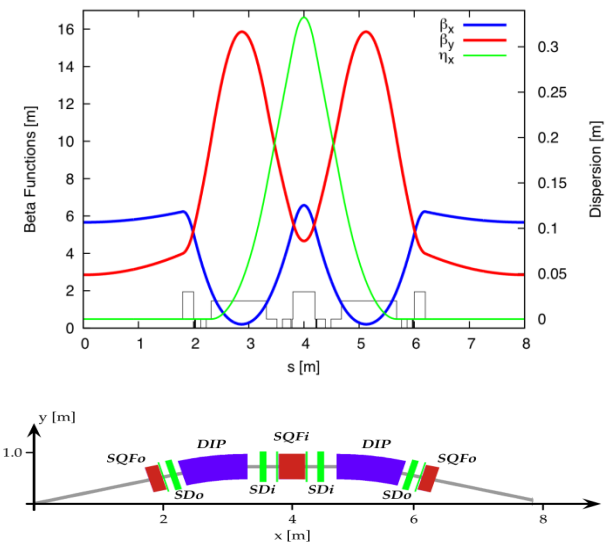

Figure 5: Machine functions and achromat for the 1.5 GeV ring

REFERENCES

[1] The MAX IV Detailed Design Report, http://www.maxlab.lu.se/maxlab/max4/DDR_public/index.html .

[2] C. Bochetta et al, "Project Status of the Polish Synchrotron Radiation Facility Solaris", THPC054, This Conference.

[3] M. Eriksson L.-J. Lindgren, M. Sjöström, E. Wallén, L. Rivkin and A. Streun, Nucl. Instr. and Meth, A 587, 221 (2008).

[4] S. Thorin, "Design of the MAX IV Ring Injector and SPF/FEL Driver", IPAC'11, New York, March 2011, THP178, (2002); http://www.JACoW.org .

[5] S. Thorin et al, "Study of some Design Concepts and and Collective Effects in the MAX IV Linac" THPC125, This Conference.

[6] J.W. McKenzie et al. " Max IV Linac Injector Simulations Including Tolerance and Jitter Analysis", THPC131, This Conference.

[7] OPA, lattice design code, http://people.web.psi.ch/streun/opa .

[8] S.C. Leemann et al., Phys. Rev. ST Accel. Beams 12, 12001 (2009).

[9] S. C. Leemann and A. Streun, Phys. Rev. ST Accel. Beams 14, 030701 (2011).

[10] S. C. Leemann, "Recent Improvements to the Lattices for the MAX IV Storage Rings", This Conference.

[11] M. Sjöström, E. Wallen, M. Eriksson and L.-J. Lindgren, Nucl. Instr. and Meth. A 601, 229 (2009).

[12] M. Johansson, "MAX IV 3 GeV Magnet Prototype", WEPO015, This Conference.

[13] M. Johansson, "Design of the MAX IV/Solaris 1.5 GeV Storage Ring Magnets", WEPO016, This Conference.

Copyright © 2011 by IPAC'11/EPS-AG — cc Creative Commons Attribution 3.0 (CC BY 3.0)