LUND UNIVERSITY

The IQC by Sundareshan and Thathachar

Jönsson, Ulf

1995

Document Version:
Publisher's PDF, also known as Version of record

Link to publication

Citation for published version (APA):
Jönsson, U. (1995). *The IQC by Sundareshan and Thathachar*. (Technical Reports TFRT-7533). Department of Automatic Control, Lund Institute of Technology (LTH).

Total number of authors:
1

General rights
Unless other specific re-use rights are stated the following general rights apply:
Copyright and moral rights for the publications made accessible in the public portal are retained by the authors and/or other copyright owners and it is a condition of accessing publications that users recognise and abide by the legal requirements associated with these rights.
• Users may download and print one copy of any publication from the public portal for the purpose of private study or research.
• You may not further distribute the material or use it for any profit-making activity or commercial gain
• You may freely distribute the URL identifying the publication in the public portal

Read more about Creative commons licenses: https://creativecommons.org/licenses/

Take down policy
If you believe that this document breaches copyright please contact us providing details, and we will remove access to the work immediately and investigate your claim.

LUND UNIVERSITY

PO Box 117
221 00 Lund
+46 46-222 00 00

ISSN 0280–5316
ISRN LUTFD2/TFRT--7533--SE

The IQC by Sundareshan and Thathachar

Ulf Jönsson

Department of Automatic Control
Lund Institute of Technology
June 1995

Department of Automatic Control
Lund Institute of Technology
P.O. Box 118
S-221 00 Lund Sweden

Document name
INTERNAL REPORT

Date of issue
June 1995

Document Number
ISRN LUTFD2/TFRT--7533--SE

Author(s)
Ulf Jönsson

Supervisor

Sponsoring organisation

Title and subtitle
The IQC by Sundareshan and Thatachar

Abstract

A classic stability result for linear systems with a time-varying parameter is studied. A multi-variable extension is given and a method for computing the multipliers involved in the stability criterion is given. The computations are based on algoritms for solving linear matrix inequalities.

Key words
Stability, Time-variation, Multiplier, IQC, LMI

Classification system and/or index terms (if any)

Supplementary bibliographical information

ISSN and key title
0280–5316

ISBN

Language
English

Number of pages
14

Security classification

Recipient's notes

The report may be ordered from the Department of Automatic Control or borrowed through the University Library 2, Box 1010, S-221 03 Lund, Sweden, Fax +46 46 110019, Telex: 33248 lubbis lund.

1. Introduction

We will study a classical result for stability analysis of linear systems with time-varying parameters. The main theorem in [Sundareshan and Thathachar, 1972] gives conditions for $\mathbf{L}_2$-stability of a feedback system consisting of a linear time invariant and stable convolution operator G in the forward path and a time-varying parameter $\delta(t)$ in the feedback path. It is assumed that δ satisfies the following conditions.

$$0 < k \leq \delta(t) \leq K < \infty, \quad \forall t \geq t_0$$
$$-2\alpha\delta(t) \leq \frac{d}{dt}\delta(t) \leq 2\beta\delta(t), \quad \forall t \geq t_0$$

This means that there is a bound on the time-variations. Sundareshan and Thathachars stability result states that the feedback system is stable if there exists a multiplier $M = M_1 + M_2$ where M_1 and M_2 are bounded operators on $\mathbf{L}_2$, which are causal and anti-causal, respectively such that there exists $\delta > 0$, $\varepsilon_1 \geq 0$ and $\varepsilon_2 \geq 0$, such that

$$\begin{aligned} \mathrm{Re}M(j\omega)G(j\omega) &\leq -\delta, \quad \forall\omega \in \mathbf{R} \\ \mathrm{Re}M_1(j\omega - \beta) &\geq \epsilon_1, \quad \forall\omega \in \mathbf{R} \\ \mathrm{Re}M_2(j\omega + \alpha) &\geq \epsilon_2, \quad \forall\omega \in \mathbf{R} \\ \epsilon = \epsilon_1 + \epsilon_2 &> 0 \end{aligned}$$

In the first inequality we have assumed a positive feedback loop. The last inequality is needed to ensure a certain factorizability condition.

The purpose of the report is twofold. Firstly we give a multivariable extension of Sundareshan and Thathachars result. The means for doing this is the use of stability theory based on IQCs as presented in [Rantzer and Megretski, 1994],[Megretski and Rantzer, 1995]. Secondly we give an method for computing the multipliers M_1 and M_2 by using LMI algorithms. We will apply these ideas for LMI computations in two examples.

Notation and Mathematical Preliminaries

- $\mathbf{R}$ denotes the real numbers. $\mathbf{R}^{n\times m}$ denotes all $n \times m$ real valued matrices.
- I denotes the identity matrix or the identity operator. We sometimes define the size if I explicitly by writing I_m for the $m \times m$ identity operator.
- $|\cdot|_2$ denotes the usual norm on $\mathbf{R}^n$, defined as $|x|_2 = \sqrt{x^T x}$.
- $\mathbf{L}_2^n(-\infty,\infty)$ is the Hilbert space of measurable functions $\mathbf{R} \mapsto \mathbf{R}^n$ satisfying
$$\|f\|_2^2 = \int_{-\infty}^{\infty} |f(t)|_2^2 dt < \infty$$
- $\mathbf{L}_2^n[0,\infty)$ is the closed subspace of $\mathbf{L}_2^n(-\infty,\infty)$ consisting of functions which are zero for almost all $t < 0$.
- The Fourier transform of functions $f \in \mathbf{L}_2^n(-\infty,\infty)$ ($f \in \mathbf{L}_2^n[0,\infty)$) is defined as
$$\widehat{f}(j\omega) = \lim_{T\to\infty} \int_{-T}^{T} e^{-i\omega t} f(t) dt$$

- The inner product on $\mathbf{L}_2^n(-\infty,\infty)$ ($\mathbf{L}_2^n[0,\infty)$) is defined as

$$\langle u, v\rangle = \int_{-\infty}^{\infty} u^T(t)v(t)dt = \frac{1}{2\pi}\int_{-\infty}^{\infty} \hat{u}^*(j\omega)\hat{v}(j\omega)d\omega$$

  where the last equality follows from the Parseval theorem.
- $\mathbf{L}_\infty^{n\times n}$ is the Banach space of measurable $n\times n$ complex valued functions that are essentially bounded on the imaginary axis and satisfy $F(-i\omega) = \overline{F(j\omega)}$ for almost all $\omega \in \mathbf{R}$. $\mathbf{RL}_\infty^{n\times n} \subset \mathbf{L}_\infty^{n\times n}$ is the subspace consisting of proper real rational functions with no poles on the imaginary axis.
- $\mathbf{H}^{n\times n}$ is the Hardy space of $n\times n$ complex valued functions of a complex variable which are analytic and bounded in the open right half plane. Every $F \in \mathbf{H}^{n\times n}$ is defined almost everywhere on the imaginary axis as the limit $F(i\omega) = \lim_{a\to 0+} F(j\omega + a)$ and satisfy $F(-i\omega) = \overline{F(j\omega)}$ for almost all $\omega \in \mathbf{R}$. $\mathbf{RH}_\infty^{n\times n} \subset \mathbf{H}^{n\times n}$ is the subspace consisting proper real rational matrix functions with no poles in the closed right half plane.
- The norm of functions $F \in \mathbf{H}^{n\times m}$ and $F \in \mathbf{L}_\infty^{n\times m}$ is defined as

$$\sup_\omega \sigma_{\max}(F(j\omega))$$

- $\mathbf{H}^{n\times n}(\alpha)$ is the set of functions having the property that $H(s-\alpha) \in \mathbf{H}^{n\times n}$. $\mathbf{RH}_\infty^{m\times m}(\alpha)$ is defined similarly.
- The projection operator P_T is defined as

$$P_T f(t) = \begin{cases} f(t), & t \le T \\ 0, & t > T \end{cases}$$

  An operator $M : \mathbf{L}_2^n(-\infty,\infty) \mapsto \mathbf{L}_2^n(-\infty,\infty)$ is causal if $P_T H P_T = P_T H$, $\forall T \in \mathbf{R}$.
- The convolution operator with kernel $m(t)$ corresponding to a transfer function $M \in \mathbf{H}^{m\times m}$ is causal.
- The Hilbert adjoint of an operator $H : \mathbf{L}_2^n(-\infty,\infty) \mapsto \mathbf{L}_2^n(-\infty,\infty)$ is defined as the operator $H^* : \mathbf{L}_2^n(-\infty,\infty) \mapsto \mathbf{L}_2^n(-\infty,\infty)$ satisfying

$$\langle u, Hv\rangle = \langle H^*u, v\rangle, \quad \forall u, v \in \mathbf{L}_2^n(-\infty,\infty)$$

- If $M \in \mathbf{H}^{n\times n}$, then $M^*(s) = M^T(-s)$ is a anti-causal operator since the kernel $m^+(t) = \mathcal{L}^{-1}\{M^*(s)\} = m^T(-t)$. If $M_1, M_2 \in \mathbf{H}^{n\times n}$, then $M = M_1 + M_2^*$ is in $\mathbf{L}_\infty^{n\times n}$, and M is noncausal.
- The Hilbert adjoint reduces to the Hermitian conjugate on the imaginary axis.

2. The Main Stability Theorem

We will consider uniform exponential stability of the system

$$\begin{aligned} \frac{d}{dt}x(t) &= Ax(t) + Bu(t), \quad x(t_0) = x_0 \\ y(t) &= Cx(t) + Du(t) \\ u(t) &= \Delta(t)y(t) \end{aligned} \tag{1}$$

Where $x(t) \in \mathbf{R}^n, y(t) \in \mathbf{R}^m$, and $u(t) \in \mathbf{R}^m$. It is assumed that A is a Hurwitz matrix. Uniform exponential stability is defined as

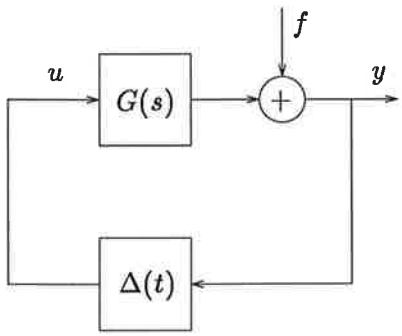

Figure 1. Block diagram representation of the system

DEFINITION 1
The system in (1) is uniformly exponentially stable if there exist $m, \alpha > 0$ such that

$$|x(t)| \leq me^{-\alpha(t-t_0)}|x_0|$$

for all initial conditions $t_0 \in \mathbf{R}, x_0 \in \mathbf{R}^n$ and for all possible $\Delta(t)$ (in the class of Δ under consideration).

We will at first consider the case when $\Delta(t) = \delta(t)I$, where δ is a real-valued and differentiable parameter satisfying

$$\begin{aligned} 0 < k \leq \delta(t) \leq K < \infty, \quad \forall t \geq t_0 \\ -2\alpha\delta(t) \leq \frac{d}{dt}\delta(t) \leq 2\beta\delta(t), \quad \forall t \end{aligned}$$

for some $\alpha, \beta \geq 0$. We will derive a stability condition for the case above with only one time-varying parameter in the next two sections. It is then easy to generalize this stability condition to the case when we have a block-diagonal uncertainty. This is the topic of Section 4.

Remark 1. The system in (1) can be represented as in Figure 1, with $G(s) = C(sI - A)^{-1}B + D \in \mathbf{RH}_\infty^{m\times m}$ and where f represent the response due to the initial condition of the system, i.e. $f(t) = Ce^{At}x_0$.

Remark 2. An equivalent problem formulation is to require input/output stability of the system in Figure 1. Here input/output stability means that the system equations

$$\begin{aligned} y &= Gu + f \\ u &= \Delta y \end{aligned} \tag{2}$$

define a causal map from f to (u, y), and that there exists a $c > 0$ such that

$$\int_0^T (u^2(t) + y^2(t))dt \leq c\int_0^T f^2(t)dt, \quad \forall T \geq 0$$

Δ is here considerd as an bounded multiplication operator on $\mathbf{L}_2$. Exponential stability and input/output stability are equivalent stability concepts for the linear systems under consideration, see for example [Vidyasagar, 1993].

We have the following stability theorem, which is a multivariable generalization of a result in [Sundareshan and Thathachar, 1972].

THEOREM 1
Assume that the system in (1) is well posed. If there exists $M \in \mathbf{L}_\infty^{m\times m}$, on the form $M = M_1 + M_2^*$, where

1. $M_1 \in \mathbf{H}^{m\times m}(\beta)$, with $M_1(j\omega - \beta) + M_1^*(j\omega - \beta) \geq 0, \quad \forall \omega \in \mathbf{R}$.
2. $M_2 \in \mathbf{H}^{m\times m}(\alpha)$, with $M_2(j\omega - \alpha) + M_2^*(j\omega - \alpha) \geq 0, \quad \forall \omega \in \mathbf{R}$

and $\varepsilon > 0$ such that

$$\begin{pmatrix} G(j\omega) \\ I \end{pmatrix}^* \begin{pmatrix} 0 & M^*(j\omega) \\ M(j\omega) & 0 \end{pmatrix} \begin{pmatrix} G(j\omega) \\ I \end{pmatrix} \leq -\varepsilon I, \quad \forall \omega \geq 0$$

then the system in (1) is uniformly exponentially stable.

□

Remark 2. Well posedness here means that $(I - \Delta(t)D)^{-1}$ is well defined and bounded for all possible realizations of $\Delta(t)$. This well posedness condition also implies that the system is well posed in the meaning of for example, [Desoer and Vidyasagar, 1975] and [Megretski and Rantzer, 1995].

The proof of Theorem 1 is given in the next section.

Remark. An imortant result from the proof in the next section is that the multiplication operator $\delta(t)I_m$, where δ is defined as above, satisfies the IQC defined by

$$\Pi(j\omega) = \begin{bmatrix} 0 & M_1^*(j\omega) + M_2(j\omega) \\ M_1(j\omega) + M_2^*(j\omega) & 0 \end{bmatrix}$$

where $M_1 \in \mathbf{H}^{m\times m}(\beta)$ and $M_2 \in \mathbf{H}^{m\times m}(\alpha)$ satisfies

$$\begin{aligned} M_1(j\omega - \beta) + M_1^*(j\omega - \beta) \geq 0, \quad \forall \omega \in \mathbf{R} \\ M_2(j\omega - \alpha) + M_2^*(j\omega - \alpha) \geq 0, \quad \forall \omega \in \mathbf{R} \end{aligned}$$

This has several implications as explained in for example [Megretski and Rantzer, 1995].

3. Proof of the Stability Theorem

Let us first define the term IQC (Integral Quadratic Constraint) more exactly, see [Megretski, 1993], [Rantzer and Megretski, 1994] and [Megretski and Rantzer, 1995]. Suppose the matrix function $\Pi \mathbf{L}_\infty^{2m\times 2m}$ is Hermitean on the imaginary axis. Then the operator defined by multiplication with $\Delta(t)$ is said to satisfy the IQC defined by Π if

$$\int_{-\infty}^{\infty} \begin{bmatrix} \hat{u}(j\omega) \\ \hat{v}(j\omega) \end{bmatrix}^* \Pi(j\omega) \begin{bmatrix} \hat{u}(j\omega) \\ \hat{v}(j\omega) \end{bmatrix} d\omega \geq 0$$

for any $\hat{u}, \hat{v}$ being the Fourier transforms of $u, v \in \mathbf{L}_2[0,\infty)$ with $v(t) = \Delta(t)u(t)$.

If we have proven that $\Delta(t)$ satisfies the IQC defined by some Π then we can apply the following Proposition, which is the main result of [Rantzer and Megretski, 1994] and [Megretski and Rantzer, 1995].

PROPOSITION 1
Assume the system in (1) is well posed. If the operator $\Delta(t)$ satisfies the IQC defined by $\Pi(j\omega)$, then the system in (1) is uniformly exponentially stable if there exists $\varepsilon > 0$ such that

$$\begin{bmatrix} G(jw) \\ I \end{bmatrix}^* \Pi(j\omega) \begin{bmatrix} G(j\omega) \\ I \end{bmatrix} \leq -\varepsilon I, \quad \forall \omega \geq 0$$

□

In order to prove Theorem 1 we will use the derivative bound of $\delta(t)$ to prove that δ satisfies the IQC defined by

$$\Pi(j\omega) = \begin{bmatrix} 0 & M^*(j\omega) \\ M(j\omega) & 0 \end{bmatrix} \tag{3}$$

for arbitrary $M = M_1 + M_2^*$, where $M_1 \in \mathbf{H}^{m\times m}(\beta)$ is such that $M_1(j\omega - \beta) + M_1^*(j\omega - \beta) \geq 0, \quad \forall \omega \in \mathbf{R}$ and $M_2 \in \mathbf{H}^{m\times m}(\alpha)$ is such that $M_2(j\omega - \alpha) + M_2^*(j\omega - \alpha) \geq 0, \quad \forall \omega \in \mathbf{R}$. Then Theorem 1 follows from Proposition 1.

We will need some preliminary lemmas in order to prove that $\delta(t)$ satisfies the IQC defined by Π in (3). We will use the notation

$$\langle f, g\rangle_T = \int_0^T f^T(\tau)g(\tau)d\tau$$

in the lemmas that follow. We will also make frequent use of the fact that δI is an self-adjoint operator. The first lemma follows from [Sundareshan and Thathachar, 1972].

LEMMA 1
Let $M \in \mathbf{H}^{m\times m}(\beta)$ be such that $M(j\omega - \beta) + M^*(j\omega - \beta) \geq 0, \quad \forall \omega \in \mathbf{R}$, then for all $f \in \mathbf{L}_2^m[0,\infty)$

$$\langle f, e^{2\beta t} M f\rangle_T \geq 0, \quad \forall T \in \mathbf{R}^+$$

Proof:

$$\begin{aligned}\langle f, e^{2\beta t} M f\rangle_T &= \langle e^{\beta t} f, (m(t)e^{\beta t}) * (e^{\beta t} f)\rangle_T \\ &= \frac{1}{4\pi}\int_{-\infty}^{\infty} \hat{f}_T^*(j\omega)(M^*(j\omega - \beta) + M(j\omega - \beta))\hat{f}_T(j\omega)d\omega\end{aligned}$$

where $\hat{f}_T(j\omega) = \mathcal{F}\{P_T e^{\beta t} f(t)\}$, $m(t) = \mathcal{F}^{-1}\{M(j\omega)\}$, and where $*$ denotes convolution. Hence, the truncated inner product is positive for all $T \in \mathbf{R}^+$.

□

The proof idea for the next two lemmas can be found in for example [Sundareshan and Thathachar, 1972] and [Desoer and Vidyasagar, 1975].

LEMMA 2
Let $\delta(t)$ be differentiable with $k \leq \delta(t) \leq K$, and $\dot{\delta}(t) \leq 2\beta\delta(t)$, where $0 < k < K < \infty$ and $\beta \geq 0$ and let $M \in \mathbf{H}^{m\times m}(\beta)$ be such that $M(j\omega - \beta) + M^*(j\omega - \beta) \geq 0, \quad \forall \omega \in \mathbf{R}$, then

$$\langle f, \delta M f\rangle \geq 0, \quad \forall f \in \mathbf{L}_2^m[0,\infty)$$

Proof: First, note that

$$\langle f, \delta M f\rangle \leq K\|M\|_\infty \|f\|_2^2$$

which follows from the Cauchy-Schwartz inequality. Let us investigate the truncated inner product. We have

$$\langle f, \delta M f\rangle_T = \langle f, (e^{-2\beta t}\delta)(e^{2\beta t} M f)\rangle_T$$

If we use the notation $\tilde{\delta}(t) = e^{-2\beta t}\delta(t)$, then we have that $\tilde{\delta}(t)$ is positive and non-increasing. Integration by parts gives

$$\langle f, \tilde{\delta}(e^{2\beta t} M f)\rangle_T = \tilde{\delta}(T)\langle f, e^{2\beta t} M f\rangle_T + \int_0^T (-\dot{\tilde{\delta}}(\tau))\langle f, e^{2\beta\tau} M f\rangle_\tau d\tau$$

which by Lemma 1 is nonnegative for all $T \in \mathbf{R}^+$. The limit as $T \to \infty$ is finite and nonnegative.

□

LEMMA 3
Let $\delta(t) : \mathbf{R}^+ \mapsto [k, K]$ be differentiable with $\dot{\delta}(t) \geq -2\alpha\delta(t)$, where $0 < k < K < \infty$ and $\alpha \geq 0$ and let $M \in \mathbf{H}^{m\times m}(\alpha)$ be such that $M(j\omega - \alpha) + M^*(j\omega - \alpha) \geq 0, \quad \forall\omega \in \mathbf{R}$, then

$$\langle f, \delta M^* f\rangle \geq 0, \quad \forall f \in \mathbf{L}_2^m$$

Proof: we have

$$\langle f, \delta M^* f\rangle = \langle f, M\delta f\rangle$$

Let $g = \delta f$ and let $k(t) = \delta^{-1}(t)$. Then $k(t)$ is differentiable and such that $\tilde{k}(t) = k(t)e^{-2\alpha t}$ is positive and nonincreasing. Since

$$\langle f, M\delta f\rangle = \langle kg, Mg\rangle = \langle g, kMg\rangle$$

the proof follows from the proof of Lemma 2.

□

It is now easy to show that δ satisfies the IQC defined by Π in (3). We use the following notation for the integral which defines the IQC

$$\int_{-\infty}^{\infty} \begin{pmatrix} \widehat{u}(j\omega) \\ \widehat{\delta u}(j\omega) \end{pmatrix}^* \Pi(j\omega) \begin{pmatrix} \widehat{u}(j\omega) \\ \widehat{\delta u}(j\omega) \end{pmatrix} d\omega = \langle \begin{pmatrix} u \\ \delta u \end{pmatrix}, \Pi \begin{pmatrix} u \\ \delta u \end{pmatrix} \rangle$$

We then have

$$\langle \begin{pmatrix} u \\ \delta u \end{pmatrix}, \Pi \begin{pmatrix} u \\ \delta u \end{pmatrix} \rangle = 2\langle u, \delta M_1 u\rangle + 2\langle u, \delta M_2^* u\rangle \geq 0$$

since the first term is positive due to Lemma 2 and the second term is positive due to Lemma 3.

4. Extension to Block-Diagonal Uncertainties

We will in this section extend Theorem 1 to the case when $\Delta(t)$ in (1) belongs to the class of block diagonal time-varying uncertainties defined as

$$\Delta(t) = \mathrm{diag}[\delta_1(t)I_{m_1}, \ldots, \delta_N(t)I_{m_N}] \tag{4}$$

Here $\delta_l(t)$ is real valued and differentiable, with

$$k \leq \delta_l(t) \leq K, \quad \forall t$$
$$-2\alpha_l\delta_l(t) \leq \frac{d}{dt}\delta_l(t) \leq 2\beta_l\delta_l(t), \quad \forall t$$

where $0 < k < K < \infty$ and $\alpha_l, \beta_l \geq 0$. For consistency among the dimensions, we need $\sum_{l=1}^{N} m_l = m$. We have the following stability theorem

THEOREM 2
Assume that the system in (1) is well posed. If there exists $M \in \mathbf{L}_\infty^{m\times m}$, on the form $M = M_1 + M_2^*$, where

1. $M_1 = \mathrm{diag}[M_{11}, \ldots, M_{1N}]$, where $M_{1l} \in \mathbf{H}^{m_l\times m_l}(\beta_l)$, with $M_{1l}(j\omega - \beta_l) + M_{1l}^*(j\omega - \beta_l) \geq 0, \quad \forall\omega \in \mathbf{R}$ for $l = 1, \ldots, N$.
2. $M_2 = \mathrm{diag}[M_{21}, \ldots, M_{2N}]$, where $M_{2l} \in \mathbf{H}^{m_l\times m_l}(\alpha_l)$, with $M_{2l}(j\omega - \alpha_l) + M_{2l}^*(j\omega - \alpha_l) \geq 0, \quad \forall\omega \in \mathbf{R}$ for $l = 1, \ldots, N$.

and $\varepsilon > 0$ such that

$$\begin{bmatrix} G(j\omega) \\ I \end{bmatrix}^* \begin{bmatrix} 0 & M^*(j\omega) \\ M(j\omega) & 0 \end{bmatrix} \begin{bmatrix} G(j\omega) \\ I \end{bmatrix} \leq -\varepsilon I, \quad \forall\omega \geq 0$$

then the system in (1) is uniformly exponentially stable.

Proof: For any $u \in \mathbf{L}_2^m[0,\infty)$, we have

$$\langle \begin{pmatrix} u \\ \Delta u \end{pmatrix}, \begin{bmatrix} 0 & M^* \\ M & 0 \end{bmatrix} \begin{pmatrix} u \\ \Delta u \end{pmatrix} \rangle = 2\sum_{l=1}^{N}(\langle u_l, \delta_l M_{1l} u_l\rangle + \langle u_l, \delta_l M_{2l}^* u_l\rangle$$

which is positive by Lemma 2 and Lemma 3. Hence, the proof follows from Theorem 1.

5. Search for Multipliers Using LMI Computation

It will be demonstrated in this section how convex optimization over linear matrix inequalities can be used in the search for suitable multipliers $M_1 \in \mathbf{RH}_\infty^{m\times m}(\beta)$ and $M_2 \in \mathbf{RH}_\infty^{m\times m}(\alpha)$ such that the conditions of Theorem 1 and Theorem 2 are satisfied. Our main idea is to introduce basis multipliers in order to reduce the search to finite dimensional subspaces of $\mathbf{RH}_\infty^{m\times m}(\beta)$ and $\mathbf{RH}_\infty^{m\times m}(\alpha)$. It is then possible to formulate the stability conditions in Theorem 1 and Theorem 2 such that the positive real lemma as given in the next lemma can be applied. This gives us an equivalent finite dimensional problem in the form of an LMI which can be solved with powerful numerical algorithms.

LEMMA 4
Given $\Psi(s) = C(sI - A)^{-1}B + D$, where $B \in \mathbf{R}^{n\times m}$, $C \in \mathbf{R}^{p\times n}$, $D \in \mathbf{R}^{p\times m}$, $M = M^T \in \mathbf{R}^{p\times p}$ and where (A, B) is controllable, then the following statements are equivalent.

1. $\Psi^*(j\omega)M\Psi(j\omega) \leq 0, \forall\omega \in [0, \infty]$
2. There exists a symmetric matrix $P \in \mathbf{R}^{n\times n}$ such that

$$\begin{bmatrix} C^T \\ D^T \end{bmatrix} M \begin{bmatrix} C & D \end{bmatrix} + \begin{bmatrix} A^T P + PA & PB \\ B^T P & 0 \end{bmatrix} \leq 0$$

The corresponding equivalence for strict inequalities also hold. The controllability condition can in that case be exchanged with the condition that $\det(j\omega - A) \neq 0$ for all $\omega \in \mathbf{R}$.

Proof: This follows from [Willems, 1971]. The last statement follows from [Rantzer, 1994].

We will focus our discussion on the case covered in Theorem 1, but it is easy to extend the ideas to the block-diagonal case covered by Theorem 2.

Introduce basis multipliers $\widetilde{M}_1 \in \mathbf{RH}_\infty^{N\times m}(\beta)$ and $\widetilde{M}_2 \in \mathbf{RH}_\infty^{M\times m}(\alpha)$, and let $M_1 = U\widetilde{M}_1$ and $M_2 = V\widetilde{M}_2$, where $U \in \mathbf{R}^{m\times N}$ and $V \in \mathbf{R}^{m\times M}$. The stability condition in Theorem 1 can with this choice of basis multipliers be stated as the question of existence of U, V defined as above such that

$$\begin{bmatrix} G \\ I \end{bmatrix}^* \begin{bmatrix} 0 & \widetilde{M}_1^* U^T + V\widetilde{M}_2 \\ U\widetilde{M}_1 + \widetilde{M}_2^* V^T & 0 \end{bmatrix} \begin{bmatrix} G \\ I \end{bmatrix} (j\omega) < 0, \quad \forall\omega \in [0, \infty]$$

subject to the following restriction, which constrains U and V such that $M_1(s-\beta)$ and $M_2(s - \alpha)$ are positive on the imaginary axis.

$$\begin{aligned} U\widetilde{M}_1(j\omega - \beta) + \widetilde{M}_1^*(j\omega - \beta)U^T &\geq 0 \\ V\widetilde{M}_2(j\omega - \alpha) + \widetilde{M}_2^*(j\omega - \alpha)V^T &\geq 0 \end{aligned}$$

for all $\omega \in [0, \infty]$. We can write the inequalities above as

$$\begin{aligned} \Psi_0^*(j\omega)M(U, V)\Psi_0(j\omega) &< 0 \\ \Psi_1^*(j\omega)M(U, V)\Psi_1(j\omega) &\leq 0 \end{aligned} \tag{5}$$

for all $\omega \in [0, \infty]$, where

$$\Psi_0 = \begin{bmatrix} I & 0 \\ 0 & I \\ 0 & \widetilde{M}_2(s) \\ \widetilde{M}_1(s) & 0 \end{bmatrix} \begin{bmatrix} G(s) \\ I \end{bmatrix}, \quad \Psi_1 = \begin{bmatrix} -I & 0 \\ 0 & -I \\ \widetilde{M}_2(s - \alpha) & 0 \\ 0 & \widetilde{M}_1(s - \beta) \end{bmatrix}$$

and

$$M(U, V) = \begin{pmatrix} 0 & 0 & V & 0 \\ 0 & 0 & 0 & U \\ V^T & 0 & 0 & 0 \\ 0 & U^T & 0 & 0 \end{pmatrix}$$

Let us introduce controllable state-space realizations of Ψ_0 and Ψ_1, such that $\Psi_0(s) = C_0(sI - A_0)^{-1}B_0 + D_0$ and $\Psi_1(s) = C_1(sI - A_1)^{-1}B_1 + D_1$. Let n_0 and n_1 denote the dimension of A_0 and A_1, respectively. Then by Lemma 4 the inequalities in (5) is satisfied if there exists $U \in \mathbf{R}^{m\times N}$, $V \in \mathbf{R}^{m\times M}$, and symmetric matrices $P_0 \in \mathbf{R}^{n_0\times n_0}$ and $P_1 \in \mathbf{R}^{n_1\times n_1}$ such that

$$\begin{pmatrix} C_0^T \\ D_0^T \end{pmatrix} M(U,V) \begin{pmatrix} C_0 \\ D_0 \end{pmatrix} + \begin{pmatrix} A_0^T P_0 + P_0 A_0 & P_0 B_0 \\ B_0^T P_0 & 0 \end{pmatrix} < 0$$
$$\begin{pmatrix} C_1^T \\ D_1^T \end{pmatrix} M(U,V) \begin{pmatrix} C_1 \\ D_1 \end{pmatrix} + \begin{pmatrix} A_1^T P_1 + P_1 A_1 & P_1 B_1 \\ B_1^T P_1 & 0 \end{pmatrix} \leq 0$$

We will apply these ideas to some examples in the next section.

6. Examples

This section will illustrate the method for finding suitable multipliers described in Section 5, by two examples. All LMI computations are done with LMI-lab, [Gahinet and Nemirovskii, 1993]. We start with a simple example from [Sundareshan and Thathachar, 1972].

EXAMPLE 1
We will consider a system as in Figure 1, where

$$G(s) = -\frac{(s^2 + 4s + 11)(s^2 + 200s + 20)}{(s^2 + 2s + 10)(s^2 + s + 16)}$$

and $\Delta(t) = \delta(t)$, where $\delta(t)$ is a real, positive and time-varying parameter with $-\delta(t) \leq \dot{\delta}(t) \leq 6\delta(t)$. We will use the ideas in Section 5 to search for suitable multipliers $M_1 \in \mathbf{RH}_\infty(3)$ and $M_2 \in \mathbf{RH}_\infty(0.5)$. With the basis multipliers

$$\widetilde{M}_1 = \left[1, \frac{1}{s+4}\right]^T$$
$$\widetilde{M}_2 = \left[1, \frac{1}{s^2+4s+16}, \frac{s}{s^2+4s+16}\right]^T$$

numerical calculations in LMI-lab, gives

$$U = (\,0.1667 \quad 0.1481\,)$$
$$V = (\,0.1667 \quad 0.1481 \quad -2.5687\,)$$

The stability conditions of Theorem 1 is satisfied with the multiplier $M = M_1 + M_2^*$, where $M_1 = U\widetilde{M}_1$, $M_2 = V\widetilde{M}_2$. Figure 2, 3 and 4 shows the Nyquist curves of $M_1(s-3)$, $M_2(s-0.5)$ and $M(s)G(s)$, respectively.

EXAMPLE 2—Ship Steering

We will in this example consider ship steering dynamics as in Example 9.6 in [Åström and Wittenmark, 1989]. The dynamics for the ship can, with notation as in Figure 5, be approximated by the Nomoto model

$$\dot{x}(t) = v(t)(-ax(t) + bv(t)\nu(t))$$
$$\dot{\psi}(t) = x(t)$$

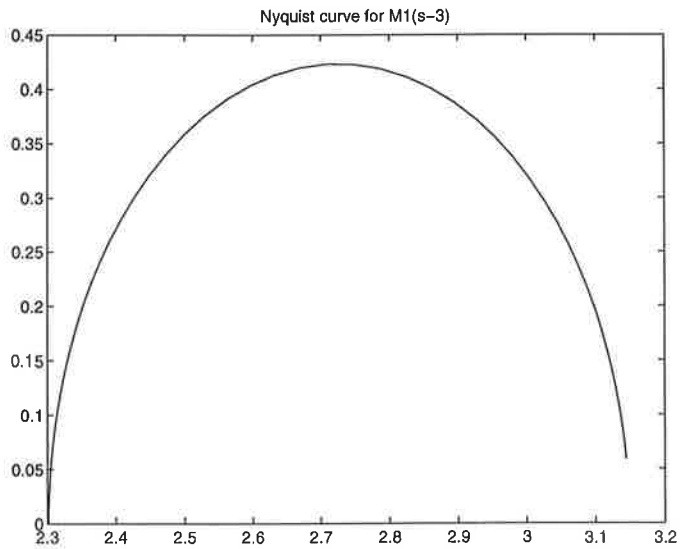

Figure 2. Nyquist curve for $M_1(s-3)$

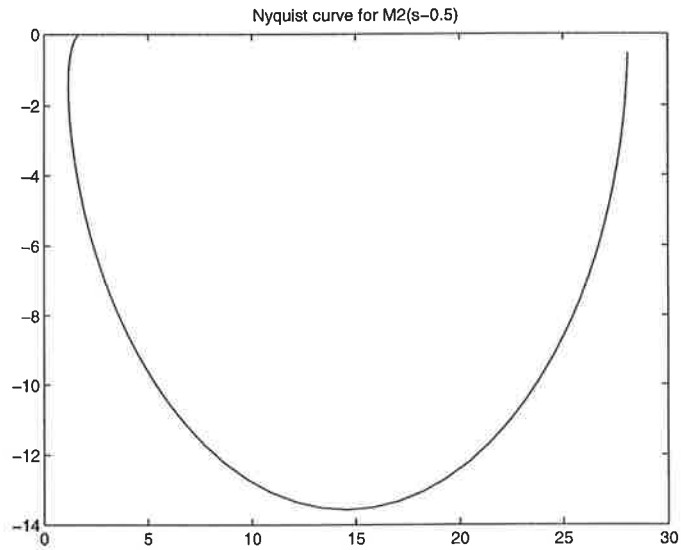

Figure 3. Nyquist curve for $M_2(s-0.5)$

where ψ denotes the heading of the ship, ν denotes the rudder angle and v is the speed of the ship. It is assumed that $v(t) \geq 0$. We will as in [Åström and Wittenmark, 1989] study stability of the ship dynamics for an unstable tanker with $a = -0.3$ and $b = 0.8$, which is controlled by a PD regulator

$$\nu = -K\psi$$
$$K(s) = k(1 + sT_d)$$

where $k = 2.5$ and $T_d = 0.86$. The closed loop system can be illustrated as in Figure 1, with $\delta(t) = v(t)I_2$ and $G(s)$ replaced by

$$G_0(s) = \begin{pmatrix} -a/s & b \\ -K(s)/s^2 & 0 \end{pmatrix}$$

We will here study the particular case when $v(t) = v_0 + \tilde{v}(t)$, where $v_0 = 0.2$ and $\tilde{v}(t) \in [\eta, 1-\eta]$ for some (small) $\eta > 0$. It is easy to see that the closed

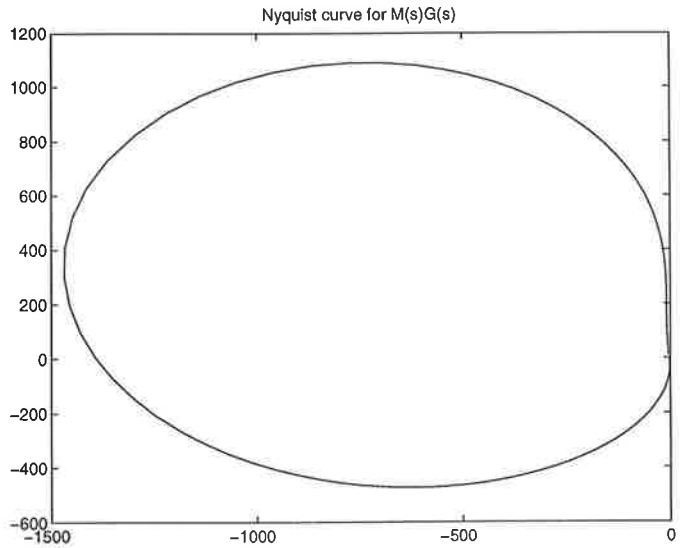

Figure 4. Nyquist curve for $M(s)G(s)$

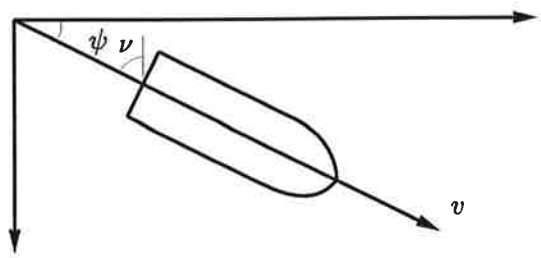

Figure 5. Notation used to describe the motion of ships.

loop system is stable for a constant speed of $v_{const} > b_{nom}/(a_{nom}kT_d) = 0.1744$. This means that we are quite close to the stability boundary when $\tilde{v} = \eta \approx 0$. We assume the time-derivative of $\tilde{v}$ is bounded as

$$-2\alpha\tilde{v}(t)(1-\tilde{v}(t)) \leq \frac{d}{dt}\tilde{v}(t) \leq 2\beta\tilde{v}(t)(1-\tilde{v}(t))$$

for some $\alpha, \beta > 0$. We transform the system as in Figure 6 in order to obtain the system on a form for applying Theorem 1. We get

$$\delta(t) = \frac{\tilde{v}(t)}{1-\tilde{v}(t)} \in [\frac{\eta}{1-\eta}, \frac{1-\eta}{\eta}] \approx (0, \infty)$$
$$-2\alpha\delta(t) \leq \frac{d}{dt}\delta(t) \leq 2\beta\delta(t)$$

and

$$G(s) = (I_2 - v_0 G_0(s))^{-1} G_0(s) - I_2 \in \mathbf{RH}_\infty^{2\times 2}$$

The characteristic loci for $G(s)$ is given in Figure 7. Note that the largest eigenvalue is much larger the smallest and that the plot only contains the characteristic loci for the positve imaginary axis. We need to find a multiplier M as in Theorem 1 such that the characteristic loci of MG is stricly in the

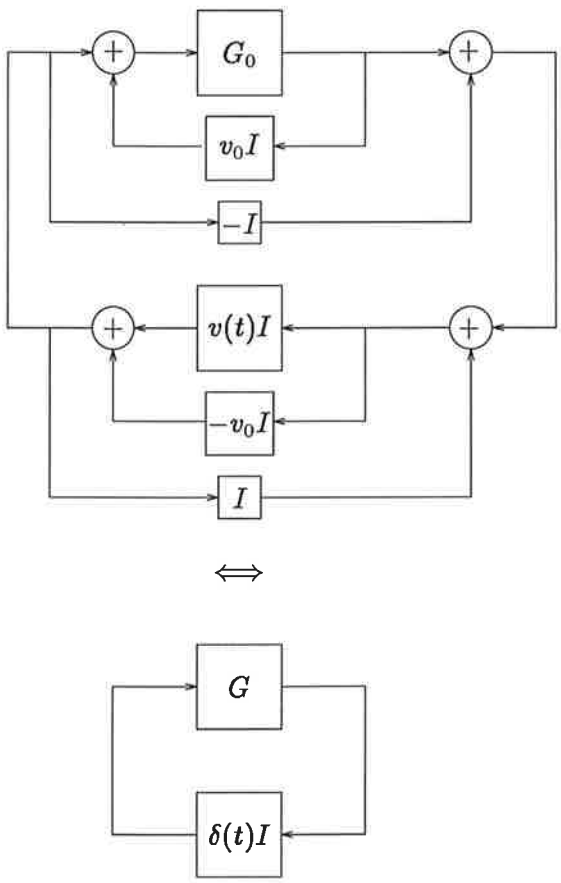

Figure 6. Loop transformation

left half plane. We use the ideas in the last section with $\widetilde{M}_2 = 0$ and

$$\widetilde{M}_1 = \begin{bmatrix} I_2 \\ \frac{s}{s+1} I_2 \\ \frac{s^2}{(s+1)^2} I_2 \\ \frac{s^3}{(s+1)^3} I_2 \\ \frac{s^4}{(s+1)^4} I_2 \end{bmatrix}$$

If $\beta = 0.085$ then compuations in LMI-lab gives

$$U^T = \begin{bmatrix} 0.2815 & -0.0550 \\ -0.0451 & 0.0110 \\ 0.1191 & 0.0013 \\ 0.0774 & 0.0049 \\ -0.0821 & 0.0214 \\ 0.1025 & -0.0019 \\ 0.2987 & -0.037 \\ -0.0188 & 0.0117 \\ -0.1485 & 0.0118 \\ 0.1144 & -0.0093 \end{bmatrix}$$

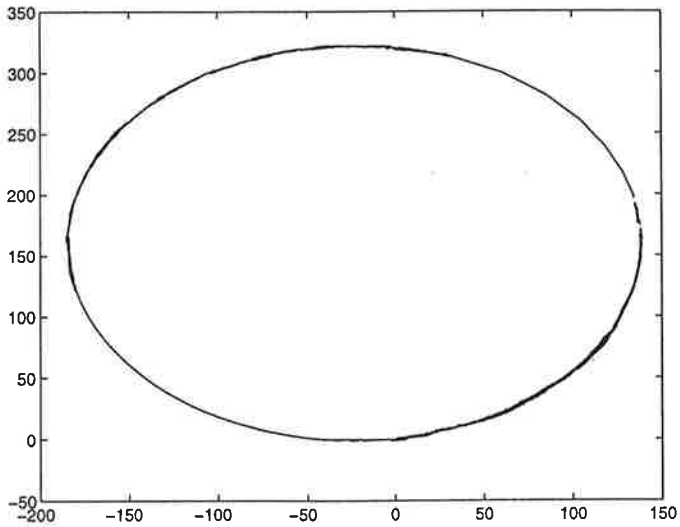

Figure 7. Characteristic loci for $G(s)$

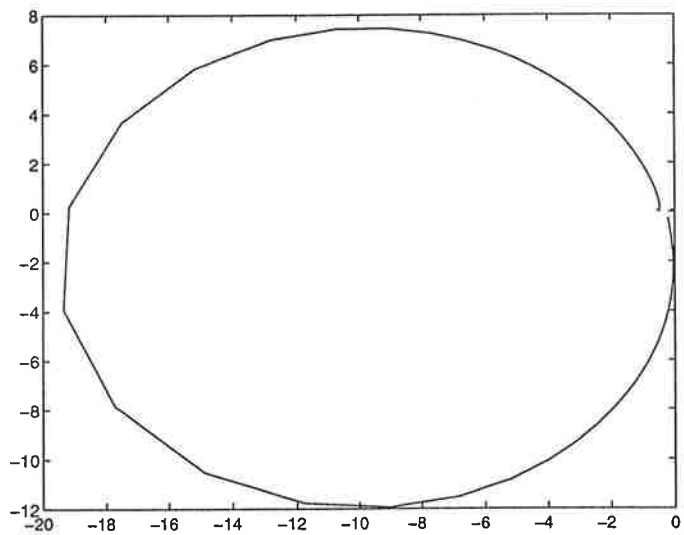

Figure 8. Characteristic loci for $M_1(s)G(s)$

and the resulting characteristic loci for M_1G is given in Figure 8 and the corresponding characteristic loci for $K1$ is given in Figure 9. We have thus shown that the system is stable when

$$\frac{d}{dt}\tilde{v}(t) \leq 0.17\tilde{v}(t)(1-\tilde{v}(t))$$

Note that we need no lower bound on the derivative of $\tilde{v}$.

7. conclusions

We have given a multivariable extension of the stability result in [Sundareshan and Thathachar, 1972] together with an LMI method for computing the multipliers. Two examples show the applicability of the result.

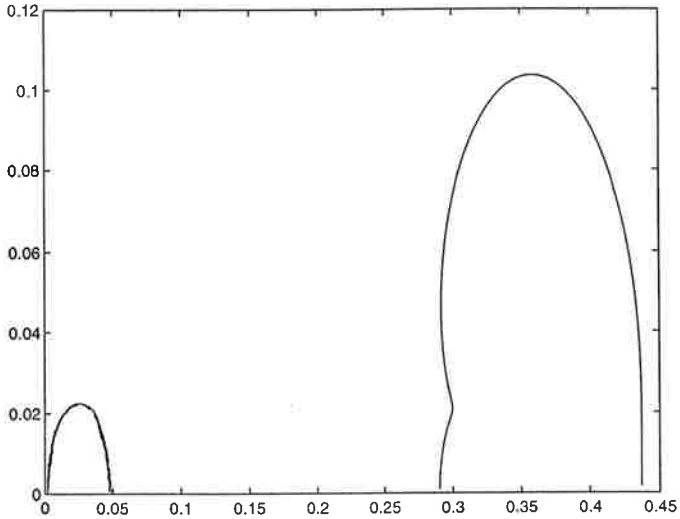

Figure 9. Characteristic loci for $M_1(s)$

8. References

[Åström and Wittenmark, 1989] Åström, K. and Wittenmark, B. (1989). *Adaptive Control.* Addison–Wesley.

[Desoer and Vidyasagar, 1975] Desoer, C. and Vidyasagar, M. (1975). *Feedback Systems: Input-Output Properties.* Academic Press, New York.

[Gahinet and Nemirovskii, 1993] Gahinet, P. and Nemirovskii, A. (1993). *LMI-lab: A Package for Manipulating and Solving LMI's*, version 2.0 edition.

[Megretski, 1993] Megretski, A. (1993). Power distribution approach in robust control. In *Proceedings of IFAC Congress.*

[Megretski and Rantzer, 1995] Megretski, A. and Rantzer, A. (1995). System Analysis via Integral Quadratic Constraints. Technical Report TFRT–7531, Department of Automatic Control, Lund Institute of Technology.

[Rantzer and Megretski, 1994] Rantzer, A. and Megretski, A. (1994). System Analysis via Integral Quadratic Constraints. In *Proceedings of the Conference of Decision and Control*, Orlando, Florida.

[Sundareshan and Thathachar, 1972] Sundareshan, M. and Thathachar, M. (1972). L_2-stability of linear time-varying systems – conditions involving noncasual multipliers. *IEEE Transaction on Automatic Control*, 17(4):504–510.

[Vidyasagar, 1993] Vidyasagar, M. (1993). *Nonlinear Systems Analysis.* Prentice Hall, second edition.

[Willems, 1971] Willems, J. (1971). The Least Squares Stationary Optimal Control and the Algebraic Riccati Equation. *IEEE Transactions on Automatic Control*, AC-16(6):621–634.