Some Extensions of Poincaré-Bendixson Theory Applied to a Resonant Converter.

Melin, Jan

2005

Some Extensions of Poincaré-Bendixson Theory Applied to a Resonant Converter.

Doctoral Thesis 2005 by

Jan Melin
Centre for Mathematical Sciences
Numerical Analysis
Lund University

Department of Chemistry and Biomedical Sciences
University of Kalmar

Abstract

In this thesis existence and uniqueness of limit cycles are shown for a resonant converter, by extending Poincaré-Bendixson theory to non-smooth vector fields. We discuss relevant control theory and the role of simulations.

Keywords: Distributions, Piecewise Linear Systems, Resonant Converter, Limit Cycles, Poincaré-Bendixson theory.
AMS Subject Classification(2000): 34A36, 34A12, 34H05

Contents of the thesis

This thesis consists of this summary together with the following four papers:

(A) J.Melin and A.Hultgren, A limit cycle of a resonant converter. In H.G.S. Engell and J.Zaytoon, editors, *Analysis and design of hybrid systems 2003,* pages 169-174. IFAC, Elsevier, 2003. Reprinted in this thesis by courtesy of Elsevier Inc.

(B) J.Melin, Does distribution theory contain means for extending Poincaré-Bendixson theory? *Journal of Mathematical Analysis and Applications,* volume 303, pages 81-89, 2004. Reprinted in this thesis by courtesy of Elsevier Inc.

(C) J.Melin, Upper bounds for the number of limit cycles of switched systems through distribution theory. *International Journal of Hybrid Systems,* volume 3, number 4, pages 331-340, Nonpareil Publishers, 2003. Reprinted in this thesis by courtesy of Nonpareil Publishers.

(D) J.Melin and A.Hultgren, On conditions for regularity of solutions for a piecewise linear system. Manuscript.

The joint papers, A and D, are results of intensive cooperation between the authors involved. My part is the mathematical-theoretical part. The main part of section 2 is my accepted paper: Some examples describing the need of modifying the Bendixson criterion for piecewise C^1-systems, in Hybrid Systems, a special issue Nonlinear Analysis, Elsevier Inc.

Preface

My work towards a PhD began in 1974, when I received my Bachelor degree in mathematics and numerical analysis at the University of Lund and in the same year I was accepted as a PhD student in numerical analysis. My supervisor at that time was the legendary professor in numerical analysis Carl-Erik Fröberg. I did most of my PhD courses in the seventies but no research. I interrupted the studies, when in 1991, I began employment at the University of Kalmar as a lecturer in mathematics. In 2004, with three accepted papers I contacted the professor in numerical analysis at the University of Lund, Gustaf Söderlind, and again registered as a PhD student in numerical analysis. Now the circle closes. I started my PhD studies in Lund, did the research at my work in Kalmar and now I will defend my PhD thesis in Lund. Work on this thesis started on two different occasions, while working at the University of Kalmar. The first time was in 1997 when senior lecturer in control theory, Anders Hultgren asked me to join his project investigating a resonant converter. At the time, I was involved in teaching and had little time for research. In spite of this I joined the project and was given the task of proving existence and uniqueness of limit cycles for this resonant converter. Simulations confirmed this and in 2003 I proved this in a special case. The work was presented in a poster session at IFAC conference in St.Malo, France and was published in the proceedings [12]. The resonant converter was modelled by a planar, piecewise linear system. To prove the existence and uniqueness in a more general case eluded me at that time. However, we did many simulations which all indicated that this was true. My co-writer Anders Hultgren has a talent for simulation tools, so he took charge of the simulations. To prepare the simulations, I estimated involved parameters. In order to prove what simulations indicated, I realized that extensions of the classical Poincaré-Bendixson theory was necessary.
The second start of this thesis began in 2002, when my colleague at the University of Kalmar assistant professor in mathematics, Torsten Lindström, invited me to participate in his project in mathematical biology. He suggested that I continue with my work with Anders Hultgren and the resonant converter. Torsten Lindström became my supervisor and I went to my first conference, a workshop on "Bifurcations in non smooth dynamical systems" in Milano, Italy, April 2002. During my time as a student at the University of Lund I studied courses in distribution theory. I decided to involve distributions in the necessary extensions of the Poincaré-Bendixson theory. In

2003 and 2004, two papers were accepted [11] and [10]. In the summer of 2004, I was invited to give a 45 minute presentation at the "World Congress of Nonlinear Analysis" (WCNA) in Orlando, Florida.

Acknowledgments

I would like to thank the following people at the University of Kalmar:
Assistant professor Torsten Lindström, my supervisor, for giving me many useful comments about writing scientific papers etc.
Senior lecturer Anders Hultgren, my co-author in papers A and D, for giving me many useful comments regarding control theory and simulations.
Lecturer Nancy Williamson, for teaching me many things about the English language.
Finally, I would like to thank the professors Gustaf Söderlind and Claus Führer, at the University of Lund, for believing in my publications and for making this thesis possible.

Kalmar, Spring 2005

Jan Melin

1 Introduction

The study of piecewise linear systems has been essential for applications in control theory, electronics, automatic navigation systems and mathematical ecology, during the past decades. The formulation of a rich and satisfactory theory for such systems is of utmost importance. Yet, only a few attempts to treat such systems in a general and abstract mathematical setting have been made. Many recent papers contain for instance, explicit calculations in specific systems in order to estimate position and number of limit cycles in two dimensional cases F. Giannakopoulos and K. Pliete [6], J. Imura and A. van der Schaft [9], J. Melin and A. Hultgren [12], R.I. Leine, D.H. van Campen B.L. and van de Vrande [15], G. Villari and Z. Zhifen [17], D.S. Boukal and V. Křivan [2]. In this thesis we suggest a new approach based on distribution theory L. Hörmander [7], R.S. Pathak [14] in the two dimensional case. We do not intend to make precise statements regarding the most general cases here, but our approach covers most cases that appear in the applications mentioned above.

Finding upper bounds for the number of limit cycles for two dimensional systems of ordinary differential equations has been a difficult and acknowledged mathematical problem since Hilbert published his 23 problems 1900. In many cases, upper bounds for for the number of limit cycles have been calculated using Floquet theory L.A. Cherkas and L.I. Zhilevich [4], Ye Y. and others [18], Zhang Z.-F. [20], [21]. In this thesis we require calculation of the divergence, of systems with discontinuous righthand sides, in the sense of distributions. Such calculations require special mathematical knowledge and in some cases these calculations are quite extensive. Yet, we claim that our approach yields information that otherwise would be elusive.

The organization of this summary is as follows: In section 2 we summarize paper B and C and give some examples demonstrating the need of extending the Poincaré-Bendixson theory. In section 3 we summarize paper A and D and give comments regarding involved control theory. We also discuss the role of simulations used in this thesis.

2 Mathematical extensions

In this section papers B and C are summarized. More importantly, this section consists of a paper that clarifies the need for extending Poincaré-

Bendixson theory. We will try to explain the use of distributions by introducing some interesting examples, where we study speed along the trajectories. First, we consider an example published by Branicky [3] and then an example given in polar coordinates, where the phenomena can be explained in a simpler way. Finally, we demonstrate a more conventional way to use the Bendixson criterion. Extensions of the Bendixson criterion have been made several times for example to smooth vector fields in higher dimensions by J.S. Muldowney [13] and Yi Li-J.S. Muldowney [19], to Lipschitz vector fields by Branicky [3], to non smooth vector fields in higher dimensions by Z. Hou [8] and to planar vector fields which is integrable distributions by J. Melin [11].
We shall work with planar autonomous systems with discontinuous righthand sides throughout this thesis. We restrict the properties of the systems under consideration of four major assumptions.

We consider the planar autonomous system

$$\dot{X} = f(X), X \in \Omega \tag{1}$$

(A1). Ω is an open domain in R^2, divided into a finite number of sub domains Ω_i (also called switching regions), such that $\cup\overline{\Omega_i} = \overline{\Omega}$.

(A2). If Ω_i and Ω_j are not disjoint and $i \neq j$, then $\overline{\Omega_i} \cap \overline{\Omega_j} = \Gamma_{ij}$, where Γ_{ij} (joint boundaries) are piecewise smooth.

(A3). f is in C^1 in all sub domains and possibly discontinuous along Γ_{ij} (also called discontinuity curves).

(A4). The vector field f defines a direction in each point in Ω. In particular, at every point along Γ_{ij} the vector field specifies into which Ω_i the flow is directed.

The conditions (A3)-(A4) imply that (1) has unique, continuous and piecewise C^2-solutions in Ω. Note that (A4) gives strong restrictions on the possible discontinuities. In terms of Filippov [5] there are three kinds of sliding modes. We only allow transversal sliding mode, that is: the vector field is directed from one side to the other at the discontinuity curves. The solutions will then pass the discontinuity curves in the field direction so we have uniqueness of solutions there. The righthand side of systems satisfying the

conditions (A1)-(A4), can be expressed in terms of Heavyside functions. This is the case in most applications. The most complicated divergence we can get is in terms of Dirac impulses (not their derivatives). This extension of the Bendixson criterion is general enough to solve most problems in applications, where the criterion is applicable. The theory of distributions is well known for some decades. Limits and differentiation of distributions can be found in several books, for example the two mentioned books in the following example.
We now formulate the extended version of the Bendixson criterion.

Theorem 1 *Consider the planar autonomous system* (1) *. Let the conditions* (A1)-(A4) *be satisfied and let* f *be bounded in the simply connected region* Ω *and* C^1 *in each* Ω_i*. If* $divf$ (the divergence of f calculated in a distributional sense) *is not identically zero and never changes signs in* Ω*, then* (1) *has no closed orbits in* Ω*.*

This theorem is proved in [11]. Now we begin the list of examples by approximating the righthand side in the Branicky example by considering a smooth function which converges to the Heavyside function.

Exampel 1 (Branicky [3]) Consider the following discontinuous system

$$\begin{pmatrix} \dot{x} \\ \dot{y} \end{pmatrix} = \begin{pmatrix} -x + (100 - 90\lambda)y + 90(2\lambda - 1)y(H(x) + H(y) - 2H(x)H(y)) \\ -(90\lambda + 10)x - y + 90(2\lambda - 1)x(H(x) + H(y) - 2H(x)H(y)) \end{pmatrix}$$

where $0 < \lambda < 1$ and H is the Heavyside function. Choose a smooth sequence $\varphi_j(x) = \frac{1}{\pi} \cdot \arctan(jx) + \frac{1}{2}$, which obviously converges to the Heavyside function. If we replace $H(x)$ by $\varphi_j(x)$, we have an approximating system with the righthand side f_j. Where f_j is arbitrary close to the original righthand side f if j is large enough. According to J. Melin [11] the original system has infinitely many closed orbits if $\lambda = \lambda_0 = 0.482544...$, so the origin is a center. A linearization of the approximating system gives at hand that the origin is a asymptotically stable focus, a trajectory winds infinitely many times around the origin. However if we let the trajectory wind around the origin just once it almost looks as a center, if j is large enough, see figure 1 for $\lambda = \lambda_0$ and $j = 100$. If we calculate the divergence of the approximating system we obtain

$$\mathrm{div} f_j(x, y) = -2 + \frac{180}{\pi^2} \cdot j \cdot (1 - 2\lambda). \left(\frac{y \cdot \arctan(jy)}{1 + j^2x^2} + \frac{x \cdot \arctan(jx)}{1 + j^2y^2} \right).$$

The divergence of f is

$$\mathrm{div} f(x,y) = -2 + 90(1-2\lambda)(|y|\delta(x) + |x|\delta(y))$$

The convergence $\mathrm{div} f_j \to \mathrm{div} f$ is in a distributional sense [7], [14]. To explain this convergence we use the fact that

$$\frac{2}{\pi} \cdot \arctan(jx) \to \mathrm{sgn}(x)$$

differentiating this we obtain

$$\frac{1}{\pi} \cdot \frac{j}{1+j^2x^2} \to \delta(x)$$

If we put these results into $\mathrm{div} f_j$, the convergence follows. The graph of $\mathrm{div} f_j$ is shown in figure 2, for $\lambda = \lambda_0$ and $j = 10$, the result is of course expected. Instead if we use the Sigmoidal approximation

$$\varphi_j(x) = \frac{1}{1+e^{-jx}}$$

which also converges to the Heavyside function, we will have the same result. The conclusion is: In spite of that the two systems almost looks numerically the same, they do not possess the same topological properties. Hence approximating systems must be handled with care.

Now we consider systems in polar coordinates, in order to explicit study the speed along the trajectories.
Consider the system

$$\begin{pmatrix} \dot{r} \\ \dot{\theta} \end{pmatrix} = F \begin{pmatrix} r \\ \theta \end{pmatrix}$$

where F might be discontinuous along the discontinuity curves and C^1 elsewhere. The divergence of the righthand side is

$$\mathrm{div} F(r,\theta) = \frac{1}{r} \cdot \partial_r(r \cdot G(r,\theta)) + \partial_\theta H(r,\theta)$$

where $F = (G, H)$. We continue by looking again into the Branicky example.

Exampel 2 (Branicky [3]) The switcing regions are the four quadrants, denote the *i:th* quadrant by Ω_i. The solutions in respectively region are

$$\begin{pmatrix} x(t) \\ y(t) \end{pmatrix} = \begin{pmatrix} r_0 \cdot e^{-t} \cdot \cos(\Delta t) \\ -\frac{10(10-9\lambda)}{\Delta} \cdot r_0 \cdot e^{-t} \cdot \sin(\Delta t) \end{pmatrix}$$

in Ω_4, where $0 < t < \frac{\pi}{2\Delta}$, and

$$\begin{pmatrix} x(t) \\ y(t) \end{pmatrix} = \begin{pmatrix} \frac{10000(10-9\lambda)^4}{\Delta^4} \cdot r_0 \cdot e^{-t} \cdot \cos(\Delta t) \\ -\frac{1000(10-9\lambda)^3}{\Delta^3} \cdot r_0 \cdot e^{-t} \cdot \sin(\Delta t) \end{pmatrix}$$

in Ω_1, where $\frac{3\pi}{2\Delta} < t < \frac{2\pi}{\Delta}$. The parameter Δ is

$$\Delta = 10\sqrt{10 + 81\lambda(1-\lambda)} = 10\sqrt{(10-9\lambda)(1+9\lambda)}$$

and $(r_0, 0), r_0 > 0$ is the discontinuity point which the trajectory intersects when it moves from Ω_1 into Ω_4, see figure 3. Choose $\lambda = \lambda_0$ we then have infinitely many closed orbits according to example 1. Now consider the angle $\theta(t)$, in Ω_4 we have

$$\theta(t) = -\arctan\left(\sqrt{\frac{10-9\lambda}{1+9\lambda}} \cdot \tan(\Delta t)\right)$$

the speed is

$$\dot{\theta}(t) = -\frac{10(10-9\lambda)(1+9\lambda)}{(1+9\lambda)\cos^2(\Delta t) + (10-9\lambda)\sin^2(\Delta t)}$$

and the acceleration

$$\ddot{\theta}(t) = \frac{900(10-9\lambda)^{\frac{3}{2}}(1+9\lambda)^{\frac{3}{2}}(1-2\lambda) \cdot \sin(2\Delta t)}{\left((1+9\lambda)\cos^2(\Delta t) + (10-9\lambda)\sin^2(\Delta t)\right)^2}$$

but $\sin(2\Delta t) > 0$ in Ω_4, this implies that $\ddot{\theta}(t) > 0$.
The same calculations in Ω_1 gives

$$\theta(t) = -\arctan\left(\sqrt{\frac{1+9\lambda}{10-9\lambda}} \cdot \tan(\Delta t)\right)$$

$$\dot{\theta}(t) = -\frac{10(10-9\lambda)(1+9\lambda)}{(10-9\lambda)\cos^2(\Delta t) + (1+9\lambda)\sin^2(\Delta t)}$$

$$\ddot{\theta}(t) = -\frac{900(10-9\lambda)^{\frac{3}{2}}(1+9\lambda)^{\frac{3}{2}}(1-2\lambda)\cdot\sin(2\Delta t)}{\Big((10-9\lambda)\cos^2(\Delta t) + (1+9\lambda)\sin^2(\Delta t)\Big)^2}$$

but since $\sin(2\Delta) < 0$ in Ω_1, we have positive acceleration even in this case. Finally we obtain

$$\dot{\theta}(0+) - \dot{\theta}(0-) = -90(1-2\lambda) < 0$$

and this means $|\dot{\theta}(0+)| > |\dot{\theta}(0-)|$.
Due to symmetry we will have corresponding results in the second and the third quadrant. We conclude that the speed has its absolute maximum immediately after intersecting a discontinuity point and then decreases to its absolute minimum just before intersecting the next discontinuity point. The angular velocity is shown in figure 4. Finally note that if $\lambda = \frac{1}{2}$, we have the continuous case with $\ddot{\theta}(t) = 0$, $\dot{\theta}(t) = -55$ and $\theta(t) = -55t$ globally in the phase plane.

We end this list of examples demonstrating the need of modifying the Bendixson criterion, with an easy example of a system given in polar coordinates.

Exampel 3 Consider the system
in $\Omega_1 : 0 < \theta < \pi$ we have

$$\begin{pmatrix} \dot{r} \\ \dot{\theta} \end{pmatrix} = \begin{pmatrix} 0 \\ -\theta - \frac{\pi}{12} \end{pmatrix}$$

and in $\Omega_2 : \pi < \theta < 2\pi$

$$\begin{pmatrix} \dot{r} \\ \dot{\theta} \end{pmatrix} = \begin{pmatrix} 0 \\ -\theta + \frac{11\pi}{12} \end{pmatrix}$$

According to symmetry the discontinuity points are $(r_0, 2k\pi)$ and (r_0, π), where $r_0 > 0, k = 0$ in Ω_1 and $k = 1$ in Ω_2.
We can see that the speed is negative, a movement clockwise, and that the system has infinitely many closed orbits, circles centered in origin. One of the circles is shown in figure 5. We can also conclude that

$$\dot{\theta}(0+) - \dot{\theta}(0-) = -\frac{\pi}{12} - \frac{11\pi}{12} = -\pi < 0,$$

this means $\dot{\theta}(0+) > \dot{\theta}(0-)$, but $\dot{\theta}(t) < 0$ implies $|\dot{\theta}(0-)| > |\dot{\theta}(0+)|$. For the acceleration holds $\ddot{\theta} = -\dot{\theta} > 0$, the conclusion is that the speed has its absolute maximum just after the intersection point and then it decreases to its absolute minimum just before the next intersection point, see example 2. The exact solution can easily be found, we have for the starting point $(r_0, 2\pi)$ $r(t) = r_0$, $\theta(t) = \frac{\pi}{12}(11 + 13e^{-t})$ if $0 < t < \ln 13$ and $\theta(t) = \frac{\pi}{12}(169e^{-t} - 1)$ if $\ln 13 < t < 2\ln 13$.
Now lets consider the righthand sides of the system
$F_1\begin{pmatrix} r \\ \theta \end{pmatrix} = \begin{pmatrix} 0 \\ -\theta - \frac{\pi}{12} \end{pmatrix}$ and $F_2\begin{pmatrix} r \\ \theta \end{pmatrix} = \begin{pmatrix} 0 \\ -\theta + \frac{11\pi}{12} \end{pmatrix}$.
The divergence in the classical sense is $\mathrm{div}F_1(r,\theta) = \mathrm{div}F_2(r,\theta) = -1 < 0$. This is of course a contradiction to the fact that the system has infinitely many closed orbits.
Instead, express the righthand side F of the system in terms of Heavyside functions, that is

$$F\begin{pmatrix} r \\ \theta \end{pmatrix} = F_1\begin{pmatrix} r \\ \theta \end{pmatrix} \cdot (H(\theta) - H(\theta - \pi)) + F_2\begin{pmatrix} r \\ \theta \end{pmatrix} \cdot H(\theta - \pi)$$

$$= F_1\begin{pmatrix} r \\ \theta \end{pmatrix} \cdot H(\theta) + \left(F_2\begin{pmatrix} r \\ \theta \end{pmatrix} - F_1\begin{pmatrix} r \\ \theta \end{pmatrix}\right) \cdot H(\theta - \pi),$$

this can be simplified as

$$F\begin{pmatrix} r \\ \theta \end{pmatrix} = \begin{pmatrix} 0 \\ (-\theta - \frac{\pi}{12}) \cdot H(\theta) + \pi \cdot H(\theta - \pi) \end{pmatrix}.$$

The divergence in a distributional sense then becomes

$$\mathrm{div}F(r,\theta) = -H(\theta) - \frac{\pi}{12} \cdot \delta(\theta) + \pi \cdot \delta(\theta - \pi),$$

this expression changes signs and is therefore a necessary condition for a closed orbit. From this we see that the divergence have to be calculated in terms of distributions, otherwise we have contradictions.

Finally we close the list of examples by demonstrating the use of the extended Bendixson criterion. We will not use the criterion as a contradiction like in the previous examples.

Exampel 4 Consider the following system:

$$\begin{pmatrix} \dot{x} \\ \dot{y} \end{pmatrix} = \begin{pmatrix} y \\ -x - y - \mathrm{sgn}(y) \end{pmatrix}$$

where sgn is the sign function. The switching regions are respectively the lower half plane and the upper half plane and the discontinuity curve is the x-axis. The interval $-1 \leq x \leq 1$ at the x-axis is an interval of fixed points (marked in figure 6). Choose a starting point $(r_0, 0)$ where $r_0 > 1$. The trajectory enters the lower half plane and we obtain the following solution:

$$\begin{pmatrix} x(t) \\ y(t) \end{pmatrix} = \begin{pmatrix} 1 + \frac{r_0 - 1}{\sqrt{3}} \cdot e^{-\frac{t}{2}} \cdot (\sqrt{3} \cdot \cos(\frac{\sqrt{3}t}{2}) + \sin(\frac{\sqrt{3}t}{2})) \\ -\frac{2(r_0-1)}{\sqrt{3}} \cdot e^{-\frac{t}{2}} \cdot \sin(\frac{\sqrt{3}t}{2}) \end{pmatrix}$$

Elementary calculations show that the trajectory intersects the negative x-axis at $r_1 = 1 - (r_0 - 1) \cdot e^{-\frac{\pi}{\sqrt{3}}}$ and we obtain that $r_1 > -r_0$. If we substitute x with -x and y with -y in the system, we state that the system is invariant. Now the system has a symmetry property and this property holds for possible closed orbits as well. According to this symmetry the system possesses no closed orbits. In fact, every trajectory stops at the interval $-1 \leq x \leq 1$, see figure 6. This kind of symmetry is well treated in [12]. Now let us try a different approach. Consider the divergence of the right hand side $\mathrm{div} f(x, y) = -1 - 2 \cdot \delta(y)$ which never changes signs. According to the extended Bendixson criterion there are no closed orbits of the system. Using the extended Bendixson criterion gives us the answer in a more convenient way than explicit calculations can.

We have demonstrated the usefulness of distributions in a couple of examples. We begin by analyzing an example brought by Branicky (1998), demonstrating that classical two dimensional qualitative theory does not extend to discontinuous systems, but where our extensions of the theory give accurate explanations of the qualitative behaviour of the system. Two of our examples are given in polar coordinates. It is very convenient to study speed along a trajectory in these cases. The last example demonstrated the conventional use of the extended version of the criterion.

We continue the section by extending Poincaré-Bendixson theorem.

Theorem 2 *Consider the planar autonomous system* (1) . *Let the conditions* (A1) - (A4) *be satisfied and let f be bounded in Ω. Suppose that K is a compact*

region in Ω, containing no fixed points of (1) *. If all solutions which starts in K remains in K, then* (1) *has a closed orbit in K.*

This theorem is proved in J.Melin [11]. Note that in the condition (A3), C^1 could be replaced by Lipschitz. Note also that distributions are not used in the proof of the theorem. When we wish to use the theorem to show existence of limit cycles, there is a problem. How do we construct the compact region K? This is not an easy problem even for continuous vector fields. We will return to this problem in the next section. Extensions of Poincaré-Bendixson theorem have been discussed before, by Simic-Johansson-Lygeros-Sastry [16].

We end this section by looking into paper C and the extension of the classical theorem involving the Floquet exponents.

Theorem 3 *Consider the planar autonomous system* (1) *. Let the conditions* (A1) - (A4) *be satisfied. Let f be bounded in Ω and* $\mathrm{div} f$ *(the divergence of f in terms of distributions) be in $L^1(\Omega)$. Furthermore let $X(t)$ be a closed trajectory of* (1) *with period T and put $\mu = \frac{1}{T} \cdot \int_0^T \mathrm{div} f(X(t))dt$ (the Floquet exponents). If $\mu < 0$, then $X(t)$ is asymptotically stable and if $\mu > 0$ then $X(t)$ is unstable.*

The theorem is proved in J.Melin [10]. The theorem can be used to establish type of stability for a closed orbit. The use of the theorem can be extended to establish uniqueness of closed orbits if $\mu < 0$. A problem is of course how to calculate μ if $\mathrm{div} f$ is a distribution. This is also handled in paper C. The divergence of the vector field consists of two parts, one continuous and one discontinuous. In a worst case scenario the discontinuity is in terms of Dirac impulses. Calculation of μ gives at hand that μ is set valued and belongs to an interval. If all of the interval is negative we have asymptotic stability and uniqueness of $X(t)$. If all of the interval is positive then $X(t)$ is unstable and if the interval consists of both negative and positive values the theorem does not tell us anything. The discontinuous part of the divergence, might imply that μ depends on the period T and some point at the closed orbit. In order to use the theorem, we have to calculate these two parameters. Calculating them can be complex. Very often we have to use simulations to get these parameters estimated. We will return to this matter in the next section.

3 Control theory and Simulations

We begin this section with something about control theory. After all, it is a control problem we are addressing in this thesis. The research questions were obtained from an industrial product development project in which The University of Kalmar is a part. The project aims for a new generation of electrostatic precipitators (ESP). The electrical properties of an ESP are modelled by a system of switched ODE's of high order. We chose a planar approximation in order to use the planar Poincaré- Bendixson theory. In future work we will consider a third order model.
In our second order system we use feedback from the phase plane to get more robustness. This leads to the switched system in figure 1.1 and the equations in paper A and D. For details we refer to these papers. Such an electrical circuit is called a resonant converter. It's purpose is to generate DC's of different levels. One of the switching (discontinuity) curves is a circle with a center at the origin, and the radius is the reference current. This circle is chosen as an example of the feedback in the phase plane. The power of the circuit is a function of the radius. It is of prime importance that we state whether or not the system possesses limit cycles for different parameter values and/or chattering, in order to control these phenomena.
In paper A we introduce the system and it's mathematical model. We prove existence and uniqueness of a limit cycle in a special case, assuming that the resistance vanishes.
In paper D we consider the same system, but we prove existence and uniqueness of limit cycles under more general conditions, and we let some of the parameters vary more generally. To do this we use extensions of the Poincaré-Bendixson theory, introduced in papers B and C.

Using simulations in this thesis serves two major purposes:

(1) To illustrate results.

(2) To help us understand how our extended theory works.

In (1) we illustrate limit cycles, compact sets used in the Poincaré-Bendixson theorem, electrical circuits, vector field flow, dissipativity, the construction of average vector fields according to Filippov, chattering phenomena, etc.
In (2) we address the finding of limit cycles, the construction of compact sets in the Poincaré-Bendixson theorem, the estimation of parameters, etc.

Finding stable limit cycles using simulations is relatively convenient. Choose a starting point somewhere in the phase plane. Either the point is located on a limit cycle or it is located on a trajectory that spirals into a limit cycle. If there is more than one limit cycle of a system, we repeat the process and choose another starting point.
Finding an unstable limit cycle is quite different. We must reverse time as follows: Consider the system

$$\dot{X}(t) = f(X(t)). \tag{2}$$

Replace t by -t in (2) and put $Y(t) = X(-t)$. We now have the following system:

$$\dot{Y}(t) = -f(Y(t)). \tag{3}$$

If (3) has an asymptotically stable limit cycle, then (2) has an unstable limit cycle. Thus we can use the same process as before. Note that reversing the time is only possible in two dimensional systems. This method is the same for smooth systems.

If the simulations above indicated a limit cycle, then we have to prove its existence. To do so we use the extended Poincaré-Bendixson theorem and construct a compact set, which can be a difficult problem even in continuous systems. In this compact set we only allow uniqueness of solutions. In this thesis, the compact set is constructed as an annular region between two closed paths. The inner path is for excluding unwanted phenomena and the outer path for making this set bounded. The smaller this set gets, the better estimation we get of the limit cycle. The problem is to find these two closed paths. One method is to follow a trajectory. This trajectory can not be a closed curve, so we must close it with a transversal (Jordan curve). This method is shown in paper B, example 2 and 3 (figure 1 and 2). The resonant converter in paper D however is more complicated. In paper B, the discontinuity curves are merely straight lines and the above method works. In paper D, one of the discontinuity curves is the x-axis but the other curve is a circle, which complicates things. To prove the existence of limit cycles in this paper we must construct three different types of compact sets. The outer path is constructed basically in the same way in all three cases, two different trajectories connected by two transversals. The inner path is constructed in three different ways depending on the locations of the fixed points of the

system, but even these inner curves consists of trajectories and transversals. This is shown in paper D, section 4, proof of the main theorem (figure 4.2, 4.3 and 4.4).
These constructions of compact sets would have been almost impossible, without a proper simulation tool, at least in paper D.

After proving the existence of a limit cycle, the next step is to prove type of stability. To prove this we have to calculate the Floquet exponents. The discontinuous part of the divergence implies that the Floquet exponents depend on the period of the limit cycle as well as the locations of the discontinuity points. These parameters are often difficult to calculate analytically, so in many cases we must estimate them using simulations. Calculations and estimations of the Floquet exponents are introduced in paper C.

A genuine simulation property is the chattering phenomena Alexander-Seidman [1], Leine-Campen-Vrande [15]. Chattering occurs at an interval of fixed points where the trajectory stops. However, the simulations did in such cases imply that the trajectory continued and we observed a closed orbit. This closed orbit does not exist in a mathematical sense. We refer to this as an attractor, see paper D, figure 5.12-5.14.

In this summary we carefully address the happenings in the neighbourhood of a discontinuity point by studying the angular velocity along a trajectory through such a point, see section 2, example 2, figure 4. The simulations give us a clear illustration of that fact and tell clearly the difference between smooth and discontinuous systems. Simulations can be used for solving transcendental equations such as the one in paper B, example 1.

For the simulations in this thesis we have used Simulink wherein we must convert the systems of ODE's to corresponding flowcharts consisting of blocks such as integrators, summarizers, etc. For details we refer to Simulink version 6.1/The MathWorks. Complications occur in our case since the systems are discontinuous (switched systems). We use the system in papers A and D as a demonstration of the construction of such a flowchart through the following example.

Exampel 5 The system is:

$$\begin{pmatrix} \dot{x} \\ \dot{y} \end{pmatrix} = \begin{pmatrix} \frac{1}{C} \cdot y \\ -\frac{x+R\cdot y-u_i}{L} \end{pmatrix},$$

where $u_1 = E - U_0$, $u_2 = U_0 - E$, $u_3 = -U_0$ and $u_4 = U_0$ in their respectively switching region Ω_i, $i = 1, 2, 3, 4$. The switching regions are:

$$\begin{aligned} \Omega_1 &: x^2 + y^2 < i_r^2, y > 0 \\ \Omega_2 &: x^2 + y^2 < i_r^2, y < 0 \\ \Omega_3 &: x^2 + y^2 > i_r^2, y > 0 \\ \Omega_4 &: x^2 + y^2 > i_r^2, y < 0 \end{aligned}$$

the switching regions are illustrated in paper D, figure 2.1.
In order to construct the corresponding flowchart, the system can have only one righthand side f and not four as in the system above. To achieve this we can express f in terms of the Heavyside function H as follows:

$$f = f_1 \cdot (1 - H(x^2 + y^2 - i_r^2)) \cdot H(y) + f_2 \cdot (1 - H(x^2 + y^2 - i_r^2)) \cdot (1 - H(y)) +$$

$$f_3 \cdot H(x^2 + y^2 - i_2^2) \cdot H(y) + f_4 \cdot H(x^2 + y^2 - i_r^2) \cdot (1 - H(y)).$$

It follows that $f = f_i$, when $(x, y) \in \Omega_i$. Using the following identity for the sign function $\mathrm{sgn}(y) = 2 \cdot H(y) - 1$ and choosing f_i from the system above we obtain, after some simplifications, the following equivalent system:

$$\begin{pmatrix} \dot{x} \\ \dot{y} \end{pmatrix} = \begin{pmatrix} \frac{1}{C} \cdot y \\ \frac{1}{L} \cdot (-x - R \cdot y + \mathrm{sgn}(y) \cdot (-U_0 + E \cdot (1 - H(x^2 + y^2 - i_r^2)))) \end{pmatrix}.$$

The corresponding flowchart is shown in figure 7. The phase plane of this system can now be easily obtained in Simulink. This described method is also used in papers B and C.

There is a different approach, however, of constructing Simulink flowcharts for switched systems. Instead, the switches can be modelled by conditional statements in Matlab, see figure 8. This flowchart will be slightly different from the one above, but they possess the same properties.

Simulink solves the ODE's numerically. We can choose the numerical method such as Euler, Runge-Kutta, etc. We can also choose fixed or variable step

size. If we choose variable step size, we must also choose the tolerance. If we do not choose at all, Simulink makes the choice for us. In the neighbourhood of a chattering phenomena, we might encounter numerical problems. The simulation may act very slowly and the attractor (see for example paper D figure 5.12), might not ever achieve completion in an acceptable time. If that is the case, we must change the numerical method and/or other parameters in order to complete the attractor.

References

[1] Alexander-Seidman. Sliding modes in intersecting switching surfaces. *Houston Journal of Mathematics*, pages 545–569, 1998.

[2] D. Boukal and V. Křivan. Lyapunov functions for Lotka-Volterra predator-prey models with optimal foraging behavior. *Mathematical Biology*, (39):493–517, 1999.

[3] M. Branicky. Multiple Lyapunov Functions and Other Analysis Tools for Switched and Hybrid Systems. *IEEE transactions on automatic control.*, 43(4):475–482, 1998.

[4] L. Cherkas and L. Zhilevich. Some criteria for the absence of limit cycles and for the existence of a single cycle. *Differential Equations*, 6:891–897, 1970.

[5] A. Filippov. *Differential Equations with Discontinuous Righthand Sides.* Kluwer Academic Publisher, 1988.

[6] F. Giannakopoulos and K. Pliete. Planar systems of piecewise linear differential equations with a line of discontinuity. *Nonlinearity*, (14):1611–1632, 2001.

[7] L. Hörmander. *The Analysis of Linear Partial Differential Operators I.* Springer, 1990.

[8] Z. Hou. Bendixsonś criterion for systems with non-smooth vector fields. In *Proceedings of the Royal Society of Edinburgh,133A*, pages 393–407, 2003.

[9] J. Imura and A. van der Schaft. Characterization of well-posedness of piecewisw linear systems. *IEEE Transactions on automatic control*, 45(9):1600–1619, 2000.

[10] J. Melin. Upper bounds for the number of limit cycles of switched systems through distribution theory. *International Journal of Hybrid Systems*, 3(4):331–340, 2003.

[11] J. Melin. Does distribution theory contain means for extending Poincaré-Bendixson theory? *Journal of Mathematical Analysis and Applications*, 303:81–89, 2004.

[12] J. Melin and A. Hultgren. A limit cycle of a resonant converter. In H. G. S. Engell and J. Zaytoon, editors, *Analysis and design of hybrid systems 2003*, pages 169–174. IFAC, Elsevier, 2003.

[13] J. Muldowney. Compound matrices and ordinary differential equations. *The Rocky Mountains Journal of Mathematics*, 20:857–872, 1990.

[14] R. Pathak. *Distribution Theory and Applications.* Alpha Science International Ltd., 2001.

[15] D. v. C. R.I. Leine and B. van de Vrande. Bifurcations in nonlinear discontinuous systems. *Nonlinear Dynamics*, (23):105–164, 2000.

[16] S.N.Simic, K.H.Johansson, J.Lygeros, and S.Sastry. Hybrid Limit Cycles and Hybrid Poincar'e-Bendixson. In *Proceedings of the 15:th IFAC World Congress, Barcelona, Spain*, 2002.

[17] G. Villari and Z. Zhifen. Periodic solutions af a switching dynamical system in the plane. *Appliable analysis*, pages 177–198, 1988.

[18] Ye Y.-Q. et al. *Theory of Limit Cycles.* American Mathematical Society, second edition, 1986.

[19] Yi-Li and J. Muldowney. On Bendixson's Criterion. *Journal of Differential Equations*, pages 27–39, 1991.

[20] Zhang Z.-F. Proof of the Uniqueness Theorem of Limit Cycles of Generelized Liénard Equations. *Applicable Analysis*, 23:63–76, 1986.

[21] Zhang Z.-F. *Qualitative theory of differential equations.* Providence American Mathematical Society, 1992.

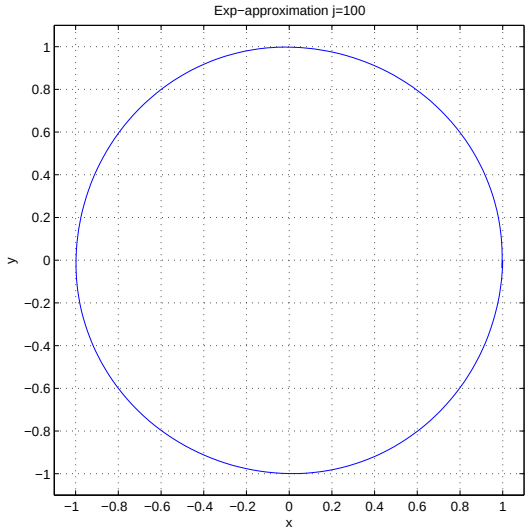

Figure 1: approximating trajectory ex1

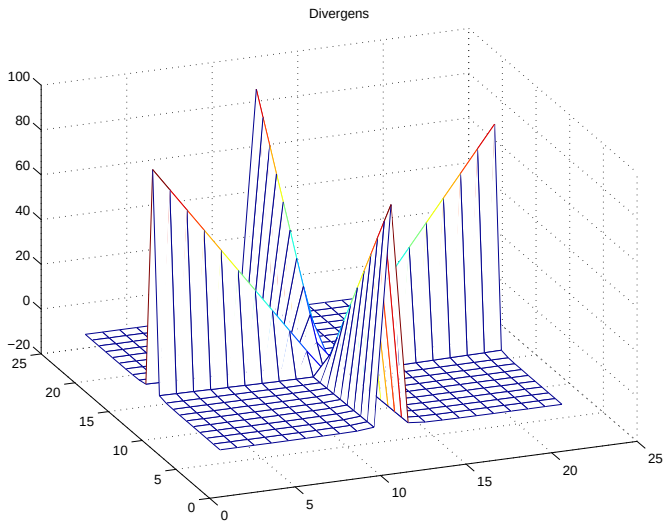

Figure 2: approximating divergence

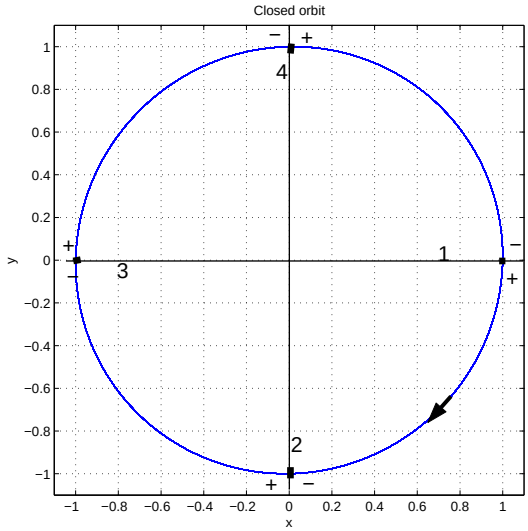

Figure 3: closed orbit ex2

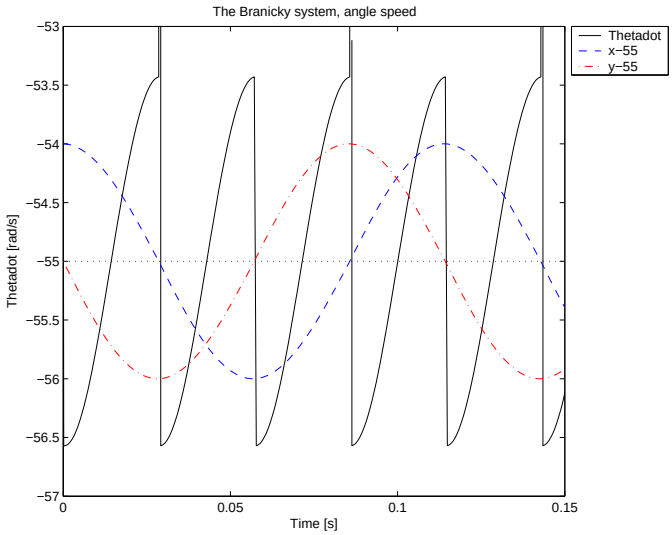

Figure 4: the angular velocity ex2

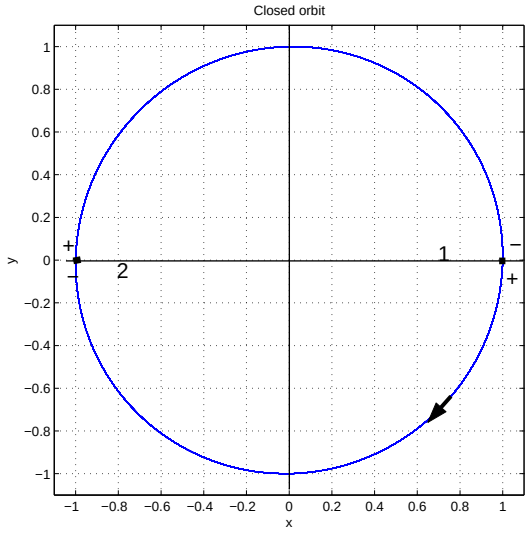

Figure 5: closed orbit ex3

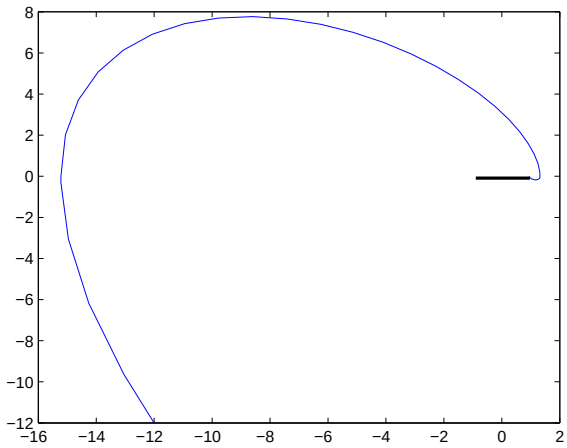

Figure 6: trajectory ex4

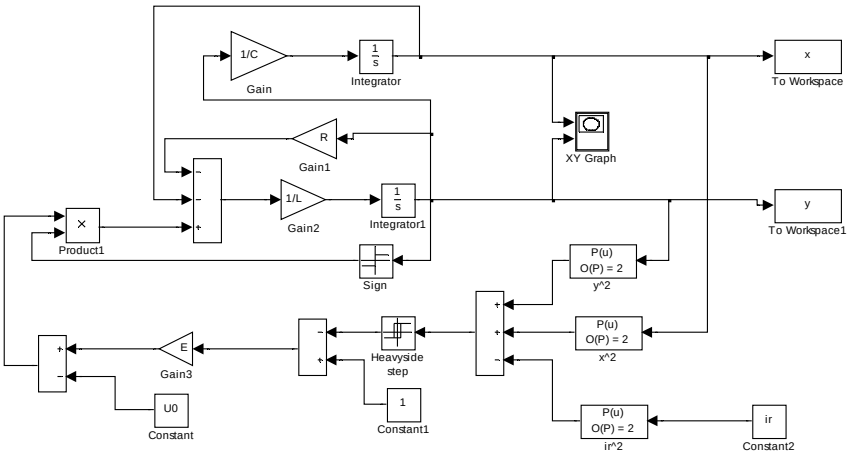

Figure 7: flowchart 1 ex5

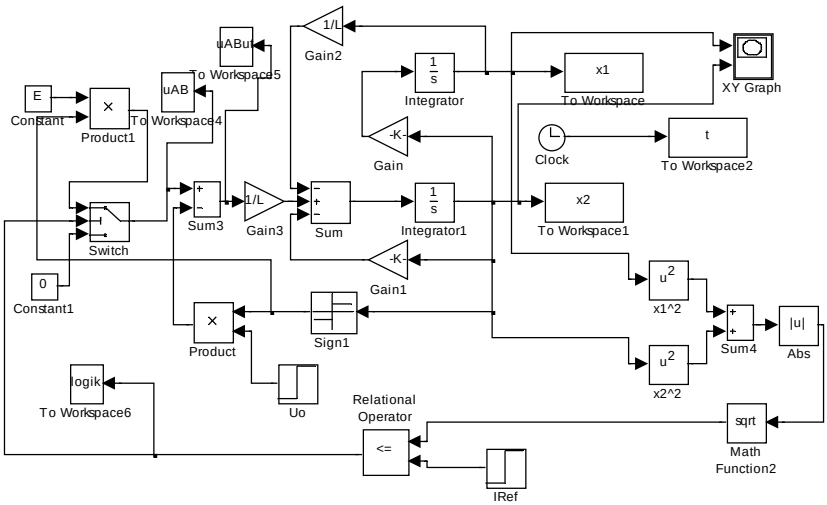

Figure 8: flowchart 2 ex5