An Aspect on the Orientation of the Gyros in a Three-gyro Inertial Stabilized Platform System

Åström, Karl Johan

1960

Karl-Johan Åström
referensexemplar

AN ASPECT ON THE ORIENTATION OF THE GYROS IN A THREE-GYRO INERTIAL STABILIZED PLATFORM SYSTEM

by

Karl-Johan Åström

(PRELIMINARY PRINTING)

REPORT 600102 OF THE TTN-GROUP

DIVISION OF APPLIED HYDROMECHANICS

ROYAL INSTITUTE OF TECHNOLOGY

STOCKHOLM, SWEDEN

Especially prepared for
the colloquium of the
25th of Jan. 1960.

An aspect on the orientation of the gyros in a three-gyro inertial stabilized platform system

by

Karl-Johan Åström

This is a brief summary of some of the results obtained in reference 1 concerning the influence of the orientation of the gyros on the stability of the platform system.

Contents

1. Introduction

2. The equations of motion of the system and their representation in block-diagrams

3. The stability of the platform system

   3.1 Definition of a concept of stability. Some general results

   3.2 An example

   3.3 A remark concerning a question of practical interest

1. Introduction

The system consists of three single axis gyros mounted to a stable element. The stable element is supported for three degrees of freedom by a system which makes it possible to apply a torque to the stable element, e.g. by a system of gimbals. The rotations of the stable element are sensed by the gyros. The output signals of the gyros are amplified, filtered and distributed to the device by which the torque is applied to the stable element. By the proper choice of the transfer functions from the gyros to the torquemotors it is possible for the stable element to maintain the desired reference.

2. The equations of motion of the system

The linearized equations of motion of the system are derived in reference 1.

The signalequation, which tells how the angular motions of the stable element are sensed by the gyros, is

$$\mathbb{S}(p)\,\bar{\varphi}(p) = \mathbb{W}(p)\,\bar{\Omega}(p) - \frac{1}{A_{22}}\,\bar{m}(p) \qquad 2.1$$

where

$\bar{\Omega}(t)$	the angular velocity of the stable element
$\varphi^{(i)}(t)$	the output signal of the (i) gyro
$\bar{\varphi} = \begin{pmatrix} \varphi^{(1)} \\ \varphi^{(2)} \\ \varphi^{(3)} \end{pmatrix}$	
$J\,m_i(t)$	the disturbing torque acting on the float of the i-gyro
$\bar{m}(t) = \begin{pmatrix} m_1(t) \\ m_2(t) \\ m_3(t) \end{pmatrix}$	
J	the moment of inertia of the gyroscopic element
ω_o	the angular velocity of the gyroscopic element

$J\,\mathbb{A}$ the inertia tensor of the float of the gyro including the gyroscopic element.
In order to simplify the problem we assume that the inertia ellipsoid of the float of the gyro is symmetrical with respect to the output axis i.e. $A_{ij} = 0 \quad \text{if } i \neq j$

$J\,A_{22}\sigma_{ij}(p)$ the transfer function from the output signal of the j-gyro to torque acting on the float of the i-gyro

$$\mathbb{S}(p) = \begin{pmatrix} p^2 + \sigma_{11}(p) & \sigma_{12}(p) & \sigma_{13}(p) \\ \sigma_{21}(p) & p^2 + \sigma_{22}(p) & \sigma_{23}(p) \\ \sigma_{31}(p) & \sigma_{32}(p) & p^2 + \sigma_{33}(p) \end{pmatrix}$$

$\Theta^{(i)}$ the orientation angle of the i-gyro

$$\mathbb{L} = \begin{pmatrix} 0 & \cos\Theta^{(1)} & \sin\Theta^{(1)} \\ \sin\Theta^{(2)} & 0 & \cos\Theta^{(2)} \\ \cos\Theta^{(3)} & \sin\Theta^{(3)} & 0 \end{pmatrix}$$

$$\mathbb{W}(p) = \frac{\omega_o}{A_{22}}\,\mathbb{I} - p\,\mathbb{L}$$

The signal equation can be illustrated by the following block-diagram.

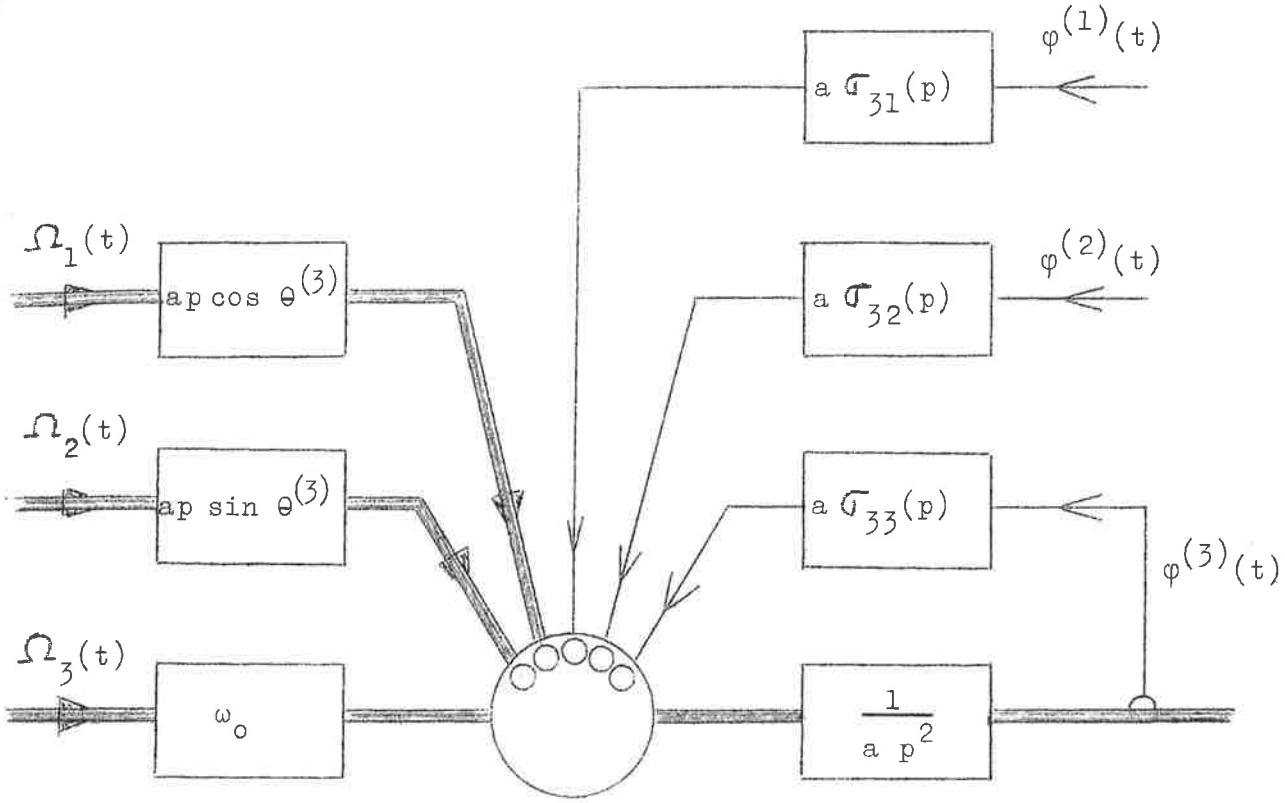

Figure 2.1. Block-diagram of the third component of the signal equation

The linearized equation of motion of the stable element

$$\mathbb{F}(p)\bar{\Omega}(p) = \bar{\mathbb{M}}(p) - \mathbb{G}(p)\,\bar{\varphi}(p) \qquad 2.2$$

where

$$\mathbb{F}(p) = p\,\mathbb{B} + \omega_o(\mathbb{L} - \tilde{\mathbb{L}})$$

$$\mathbb{G}(p) = \mathbb{T}(p) + \omega_o D\,\mathbb{I} + A_{22}\,p^2\,\tilde{\mathbb{L}}$$

and

$J\,\bar{\mathbb{M}}(t)$	the disturbing torque acting on the stable element
$J\,\mathbb{B}$	the inertia tensor of the stable element including all moving parts fixed in their actual position
$J\,\tau_{ij}(p)$	the transfer function from the output signal of the j-gyro to the i-component of the torque acting on the stable element

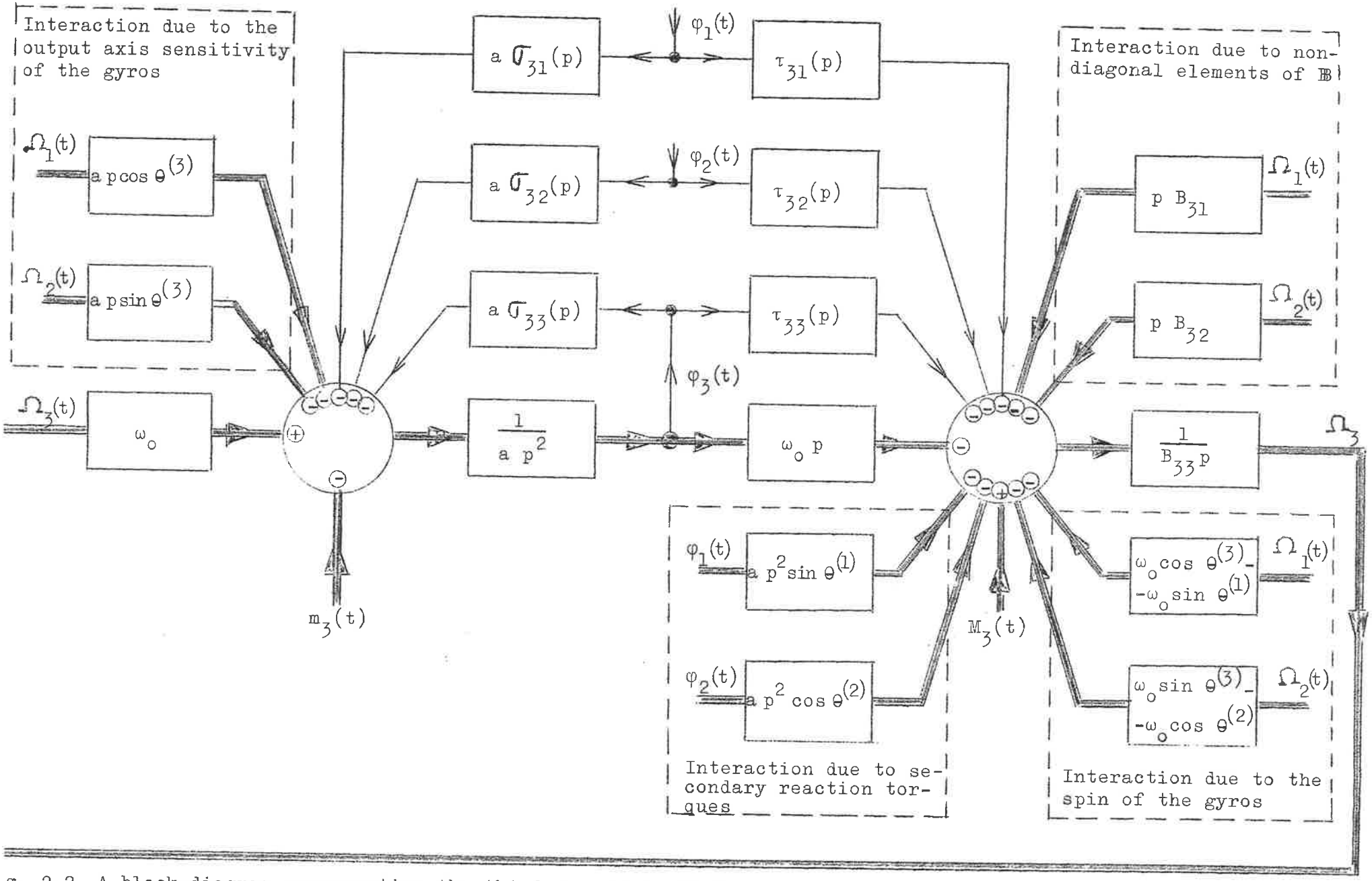

g. 2.2 A block-diagram representing the third component of the equation of motion of the stable element with the servoloop closed

$$\mathbb{T}(p) = \begin{pmatrix} \tau_{11}(p) & \tau_{12}(p) & \tau_{13}(p) \\ \tau_{21}(p) & \tau_{22}(p) & \tau_{23}(p) \\ \tau_{31}(p) & \tau_{32}(p) & \tau_{33}(p) \end{pmatrix}$$

The left-hand side of the equation (2.2) is the time-derivative of the angular momentum of the stable element.

The right-hand side of the equation 2.2 is the torque acting on the stable element, which is composed by the disturbing torque $\bar{M}(t)$, the torque applied by the torque-motors, which are controlled by the output signals of the gyros, and the reaction torques of the gyroscopes.

The block-diagram of figure 2.2 is a representation of the third component of the equation of motion of the stable element.

In some cases it is more convenient to represent the equations (2.1) and (2.2) by the matrix-blockdiagrams of figure 2.3 and 2.4.

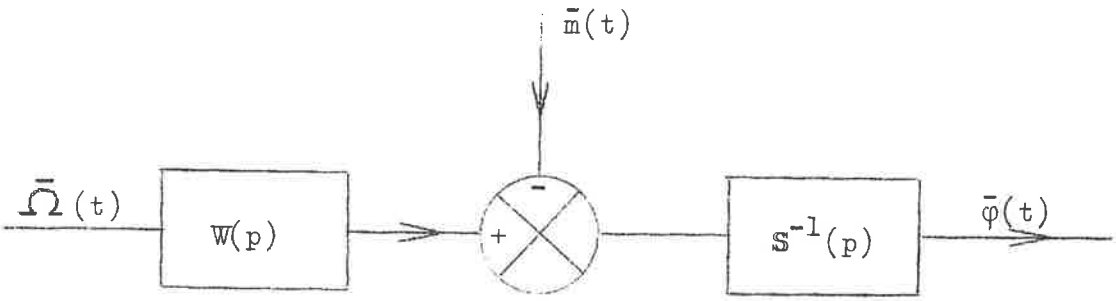

Figure 2.3. Block-diagram illustrating the signalequation 2.1 (Notice that the differential operators in the blocks are matrices and the variables vectors. As matrix-multiplication is not commutative the blocks cannot be interchanged)

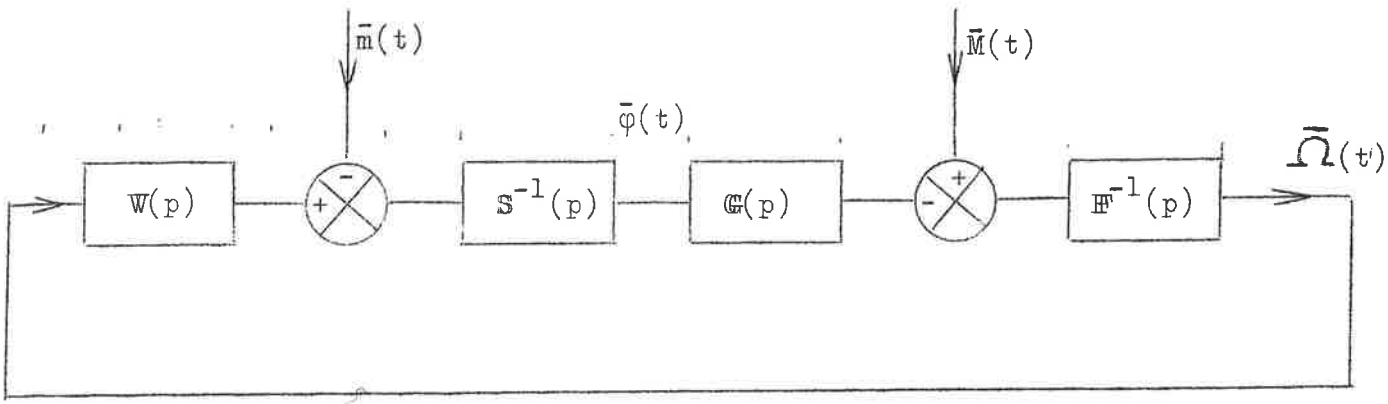

Figure 2.4. Block-diagram of the platform system. Illustrating the signal equation (2.1) and the equation of motion of the stable element (2.2). (Notice that the differential operators in the blocks are matrices and the variables vectors. As matrix multiplication is not commutative the blocks cannot be interchanged.

Eliminating $\bar{\varphi}(t)$ between the equations (2.1) and (2.2) we get

$$\mathbb{K}(p)\,\bar{\Omega}(p) = \bar{M}(p) + \frac{1}{A_{22}}\,\mathbb{G}(p)\cdot\mathbb{S}^{-1}(p)\,\bar{m}(p) \qquad 2.3$$

where

$$\mathbb{K}(p) = \mathbb{F}(p) + \mathbb{G}(p)\cdot\mathbb{S}^{-1}(p)\cdot\mathbb{W}(p)$$

The equation (2.3) is refered to as the equation of motion of the stable element when the servoloop is closed.

Introducing the matrix $\mathbb{K}(p)$ the block-diagram of figure 2.4 becomes

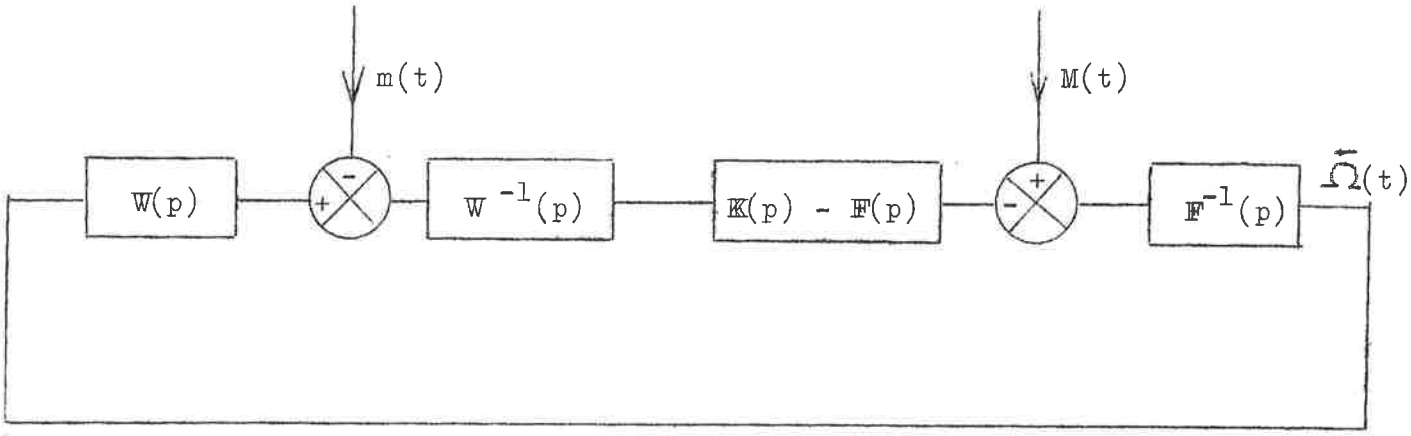

Figure 2.5. Block-diagram of the platform system. (Notice that the variables are vectors and the transfer functions in the blocks are matrices. As matrix multiplication is not commutative the blocks cannot be interchanged).

3. The stability of the platform system

3.1 We will now discuss the stability of the platform system. We start by defining a concept of stability. The equation of motion of the system is

$$\mathbb{K}(p)\bar{\Omega}(p) = \bar{M}(p) + \frac{1}{A_{22}}\mathbb{G}(p)\,\mathbb{S}^{-1}(p)\,\bar{m}(p)$$

The platform is thus disturbed by $\bar{M}(t)$ and $\bar{m}(t)$, who are referred to as disturbing torque acting on the stable element and on the floats of the gyros, respectively. We adopt the following definitions

Definition 3.11

A platform system is said to be stable if a proper torque puls acting the stable element or on the float of a gyro gives a finite angular displacement of the stable element.

Definition 3.12

A platform system is said to be strictly stable if a proper torque puls acting on the stable element gives a displacement error which tends to zero and a proper torque puls acting on the float of a gyro gives a finite angular displacement of the stable element.

By a proper torque puls we mean a disturbing torque, with so small a magnitude that the servos are not saturated, acting for a time. Considerably smaller than the stepfunction response time of the servosystem.

We will now analyse the stability of some inertial stabilized platform systems. We have

Definition 3.13

A stable platform system is inertial stabilized or stabilized with respect to inertial space if a constant torque acting on the stable element gives a finite angular displacement of the stable element.

Before continuing we will further discuss the properties of the $\mathbb{K}$ (p)-matrix for an inertial stabilized platform system. For this purpose we adopt the viewpoint of Thévenin. Suppose the stable element to be enclosed in a "black-box" arranged in such a way that we can apply a torque to the stable element. At present we also

assume that the disturbing torque acting on the floats of the gyros are zero.

The equation of motion of the stable element with the servoloop closed is then

$$\mathbb{K}(p)\,\overline{\Omega}(p) = \bar{M}(p)$$

Nondiagonal elements of the $\mathbb{K}(p)$-matrix mean that a torque applied to the stable element along one axis gives angular displacements along other axes, i.e. corsscouplings. For a discussion of the properties of the diagonal elements there is no loss in generality of discussing the single axis case. We thus have an axis coming out of a black box. When a torque is applied to the axis the angular velocity $\Omega(t)$ of the axis will be determined by

$$k(p)\cdot\Omega(p) = M(p)$$

If

$$k(p) = ap$$

the angular acceleration of the system inside the "black box" will be proportional to the applied torque. The observer outside the "black box" thus can interpret the system inside the "black box" as a wheel whose moment of inertia is a.

Similarly if

$$k(p) = b = \text{const.}$$

the angular velocity of the system inside the "black box" will be proportional to the applied torque. The outside observer thus can interpret the system as a velocity situation as the axis coming out of the "black box" is provided with a velocity proportional damping. If

$$k(p) = \frac{k}{p}$$

we get

$$\Omega(p) = \frac{p}{k}\,M(p)$$

and

$$\theta(t) = \int_0^t \Omega(\tau)\,d(\tau) = \frac{1}{k}\,M(t)$$

The angular deviation is thus proportional to the torque applied, which the outside observer can interpret as if the axis is spring restrained with respect to angular desplacements. The spring coefficient is obviously k.

As the equation of motion is linear, we can easily interpret complex $\mathbb{K}(p)$-matrices by adding terms of the discussed type.

Instead of talking of the properties of "the stable element when the servoloop is closed", we introduce the concept of <u>platform</u> and simply say the properties of the platform.

With the introduced physical interpretations the definition 3.13 simply means that the platform in an inertial stabilized system should at least be spring restrained to inertial space with respect to angular displacements. This can be formulated as a lemma.

<u>Lemma 3.11</u>

For an inertial stabilized platform system the matrix $\mathbb{K}(p)$ has the property

$$\mathbb{K}(p) = \frac{1}{p^n}\,\mathbb{C} + \underset{p\to 0}{O}\left(\frac{1}{p^{n-1}}\right)$$

where n 1 is an integer and $\mathbb{C}$ is a diagonal matrix with constant nonvanishing diagonal elements.

Before continuing we introduce some notations.

<u>Definition 3.14</u>

An equation is said to be stable if it has no roots in the open right half plane and only simple zeros on the imaginary axis.

An equation is said to be strictly stable if it has no roots in the closed right half plane. The function f(z) is said to be (strictly) stable if the equation f(z)=0 is (strictly) stable.

We will now give a condition for the stability of the system.

Theorem 3.11

A necessary and sufficient condition that an inertial stabilized platform system should be stable is that the equations

$$\det \left\{ p\ \mathbb{K}(p) \right\} = 0 \qquad 3.1$$

and

$$\det \left\{ p\ \mathbb{S}(p)\ \mathbb{G}^{-1}(p)\ \mathbb{K}(p) \right\} = 0 \qquad 3.2$$

are stable.

The equation (3.1) is referred to as the characteristic equation of the system. The roots of the characteristic equation determines the way the displacement error fades out after a torque puls disturbance on the stable element. If all the roots of the characteristic equation are in the left half plane the displacement error is exponentially damped. If the characteristic equation has simple imaginary roots the displacement error will oscillate with constant amplitude. A single root at the origin but no other roots in the closed right half plane means that the displacement error tends to a constant etc. Because of lemma 3.11 the characteristic equation has no root at the origin. Similarly the roots of the equation (3.2) determines the way the displacement error, after a torque puls on one of the gyro-floats, fades out. Instability of the equation (3.2) means that a torque puls acting on one of the gyro-floats will give an exponentially increasing angular displacement of the stable element.

Although a system is strictly stable according to the above definitions the displacement error obtained after a torque puls disturbance on the stable element may not tend to zero fast enough. Therefore in an actual application there may be further restrictions on the characteristic equation of the system.

Although it is possible to claim that the characteristic equation is strictly stable we cannot claim strict stability of the equation (3.2). This is obvious from the following lemma.

Lemma 3.12

For an inertial stabilized platform system equation (3.2) has always one single root p=0.

The proof is left for the reader.

We will now discuss some consequences of the theorem 8.11. We have the following sufficient condition for stability.

Corollary 3.11

An inertial stabilized platform system is stable if

(i) The function $\det\left\{\mathbb{W}(p)\right\}$ is stable.

(ii) The characteristic equation of the system, $\det\left\{p\ \mathbb{K}(p)\right\} = 0$ is (strictly) stable.

(iii) The function $\det\left\{\mathbb{K}(p) - \mathbb{F}(p)\right\}$ has no poles in the right half-plane.

We have

$$\det \mathbb{W}(p) = \left(\frac{\omega_o}{a}\right)^3 + \frac{\omega_o(s-3)}{2a}\, p^2 - \ell\, p^3$$

where s is the spin of the platform

$$s = (\sin\theta^{(1)} - \cos\theta^{(3)})^2 + (\sin\theta^{(2)} - \cos\theta^{(1)})^2 + (\sin\theta^{(3)} - \cos\theta^{(2)})^2$$

[The total angular momentum of the gyros is $\sqrt{s}\cdot J\,\omega_o$]

and ℓ is the output axis orientation number defined as the triple scalar product formed by unit vectors parallel to the output axes of the gyros. We have

$$= \sin\theta^{(1)}\ \sin\theta^{(2)}\ \sin\theta^{(3)} + \cos\theta^{(1)}\ \cos\theta^{(2)}\ \cos\theta^{(3)}$$

The condition (i) can thus be formulated

(i) The arrangement of the gyros is chosen in such a way that $s \geq 3$ and $\ell = 0$.

Some examples of systems with this arrangement of the gyros are shown in plate 3.3 and 3.9.

PLATE 3.3

SYSTEMS WITH SPIN THREE AND OUTPUT AXES IN THE SAME PLANE

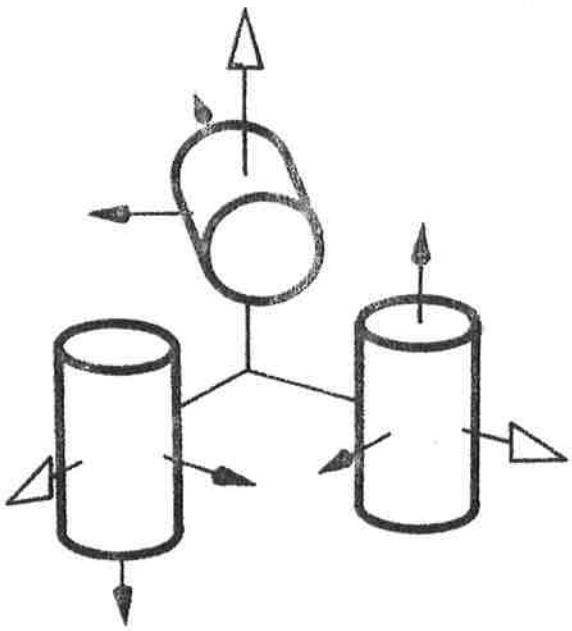

$\left[-\frac{\pi}{2}, 0, -\frac{3\pi}{4}\right]$ $S = 3, I = 0$

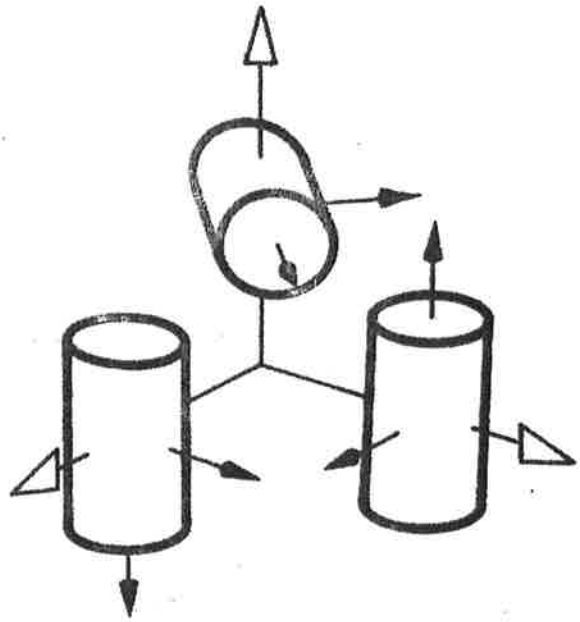

$\left[-\frac{\pi}{2}, 0, \frac{\pi}{4}\right]$ $S = 3, I = 0$

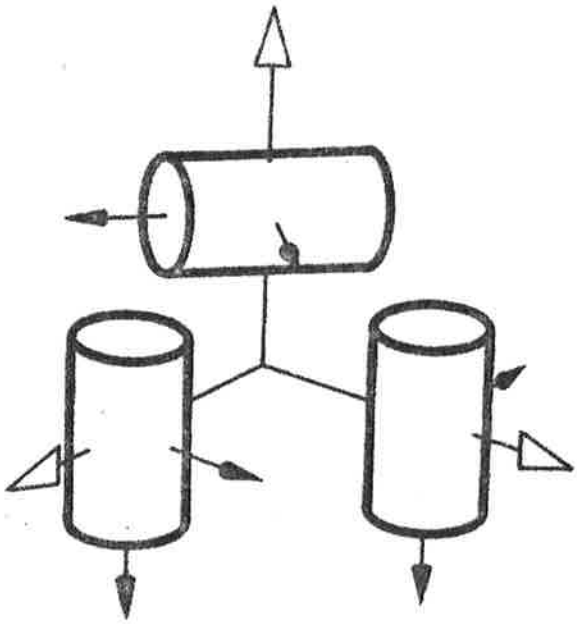

$\left[-\frac{\pi}{2}, \pi, -\frac{\pi}{4}\right]$ $S = 3, I = 0$

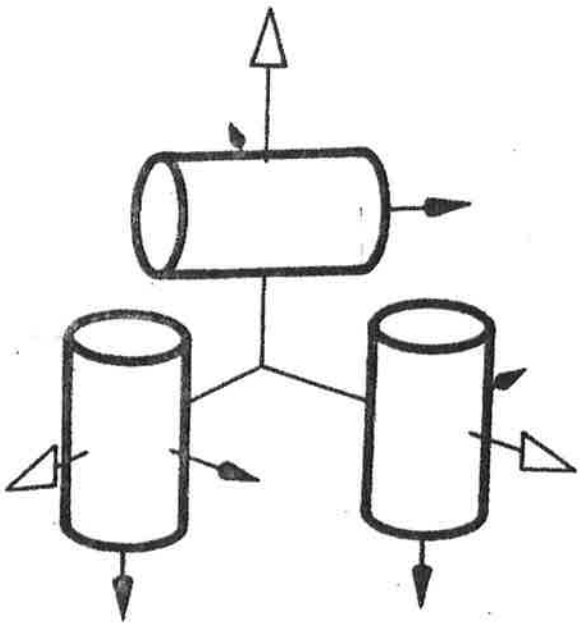

$\left[-\frac{\pi}{2}, \pi, \frac{3\pi}{4}\right]$ $S = 3, I = 0$

PLATE 3.9

ORTHOGONAL SYSTEMS WITH SPIN FIVE

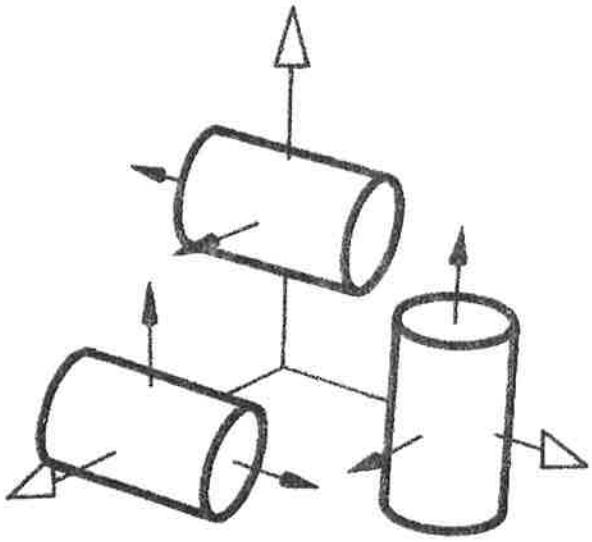

$\left[0, 0, -\frac{\pi}{2}\right]$ $s = 5, l = 0$

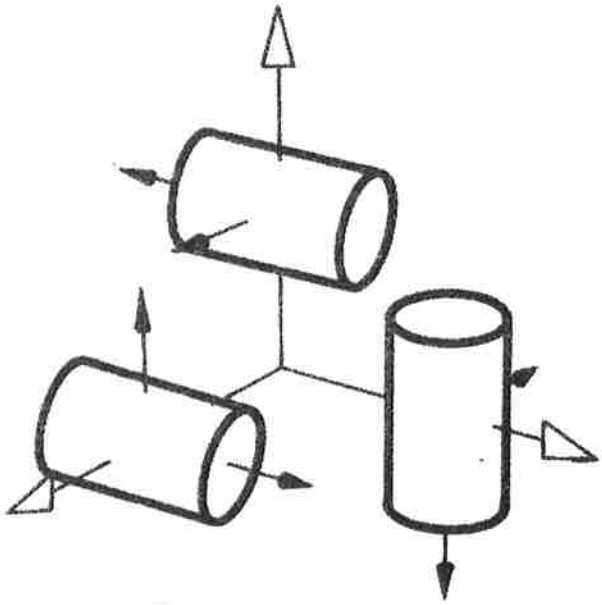

$\left[0, \pi, -\frac{\pi}{2}\right]$ $s = 5, l = 0$

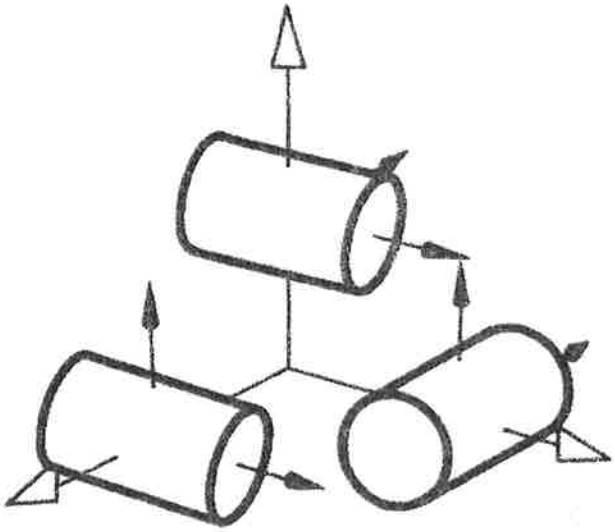

$\left[0, -\frac{\pi}{2}, \frac{\pi}{2}\right]$ $s = 5, l = 0$

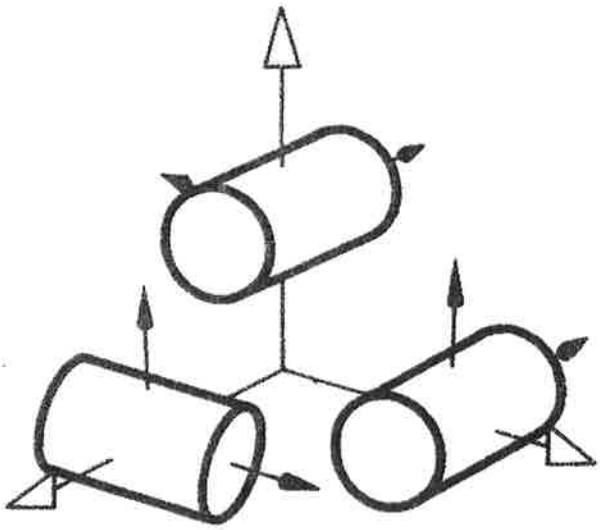

$\left[0, -\frac{\pi}{2}, \pi\right]$ $s = 5, l = 0$

If the condition (i) is dropped the function det $\mathbb{W}(p)$ is unstable. The system then must be heavily restricted in order to assure stability. This is illustrated by the following lemma.

Lemma 3.13

For a stable platform system the functions det $\mathbb{W}(p)$ and $\det\left\{\mathbb{K}(p)-\mathbb{F}(p)\right\}$ have the same zeros in the right half plane.

The proof is left for the reader. Compare figure 2.5.

This lemma means that if the function

$$\det \mathbb{W}(p) = \left(\frac{\omega_o}{a}\right)^3 + \frac{\omega_o(s-3)}{2a} p^2 - \ell p^3$$

is not stable i.e. $\ell \neq 0$ or $\ell = 0$ and $s < 3$ the matrices $\mathbb{K}(p)$ and $\mathbb{F}(p)$ must be chosen in a very special way if a torque puls acting on one of the gyro floats should not give an exponentially increasing angular displacement of the stable element.

3.2 An example

We will now illustrate the theory of section 3.1.

Suppose we have a system with

$$\mathbb{K}(p) = b\left\{Y_1(p)\mathbb{I} - \frac{ap}{\omega_o}\left[Y_1(p) - p\right]\mathbb{L}\right\} \qquad 3.21$$

This means that the interaction is entirely caused by the output axis sensitivity of the gyros.

It is easily deduced that for this special system the stability of the equation 3.1 implies the stability of the equation 3.2.
For a system of this type it is thus sufficient to analyse the stability of the characteristic equation

$$\det\left\{p\,\mathbb{K}(p)\right\} = 0 \qquad 3.22$$

For this equation with the $\mathbb{K}(p)$-matrix given by the equation 3.21 we have

Lemma 3.21

A sufficient condition that the characteristic equation (3.22) should be stable for any $Y_1(p)$ with no zeros in the closed right half plane is

$$\begin{cases} s = 3 \\ \ell = 0 \end{cases}$$

Proof.

The characteristic equation of the system can be reduced to

$$p\, Y_1(p) - t_i \frac{ap^2}{\omega_o} \left[Y_1(p) - p \right] = 0 \qquad i = 1,2,3$$

where the t_i:s are the roots of the equation

$$t^3 + \frac{s-3}{2} t - \ell = 0$$

s is the spin number and ℓ is the output axis orientation number introduced in paragraph 3.

If the condition of the theorem is satisfied we have

$$t_i = 0 \qquad i = 1,2,3$$

The characteristic equation is then

$$p\, Y_1(p) = 0$$

The function $Y_1(p)$ has no zeros in the right half plane. As the system is inertial stabilized we have

$$\lim_{p \to 0} p\, Y_1(p) \neq 0$$

which implies that the characteristic equation is strictly stable.

The system discussed is thus certainly stable for any $Y_1(p)$ with no poles or zeros in the closed right half plane, if the arrangement of the gyros is suitable i.e. s=3 and ℓ=0.

Some questions now arises. Is it possible to obtain a stable system if the arrangement of the gyros is not of a type with s=3 and ℓ=0. Although a system with s=3 and ℓ=0 is strictly stable, is it sufficiently damped to be of practical use.

Before answering these questions we will further discuss the properties of the actual $Y_1(p)$-functions.

One possible $Y_1(p)$-function is

$$Y_1(p) = \frac{p^2 + 2\zeta\ \beta p + \beta^2}{p}$$

For a system with this $Y_1(p)$-function we can conclude.

<u>If the crosscoupling coefficient γ defined by</u>

$$\gamma = \frac{a\beta}{\omega_o}$$

<u>is sufficiently small, the system is stable independent of the orientation of the gyros</u>.

The critical value of the crosscoupling coefficient for which the system turns unstable is given by

$$\gamma_o \cdot \mathrm{Re}\left\{t_o\right\} = f(\zeta,\ \alpha_o)$$

where t_o is the root of the equation

$$t^3 + \frac{s-3}{2}\,t - \ell = 0$$

in the first quadrant or on the real axis and

$$f(\zeta,\ \alpha_o) = \min(2\zeta,\ \alpha_o)$$

and z_o is the smallest positive root of the equation

$$\begin{cases} 2\zeta(1+a_o)z^3 - (1+8\zeta^2)z^2 + 4\zeta(1+2\zeta^2)z - 4\zeta^2 = 0 \\ a_o = \left(\dfrac{\mathrm{Im}\left\{t_o\right\}}{\mathrm{Re}\left\{t_o\right\}}\right)^2 \end{cases}$$

Analysing this condition further we obtain that systems with

$$\begin{cases} \ell = 0 \\ s \geqq 3 \end{cases}$$

are stable for all values of the crosscoupling coefficient.

Some examples of the rootlocus of the characteristic equation with respect to the crosscoupling coefficient γ for systems with different orientation of the gyros are shown in plates 8.2-8.24.

PLATE 8.2

ROOTLOCUS WITH RESPECT TO THE CROSSCOUPLING COEFFICENT γ FOR THE CHARACTERISTIC EQUATION OF A SYSTEM WITH $S=1$, $e=0, \varrho=0$ AND $Y_1(p) = \frac{p^2+1.41p+1}{p}$

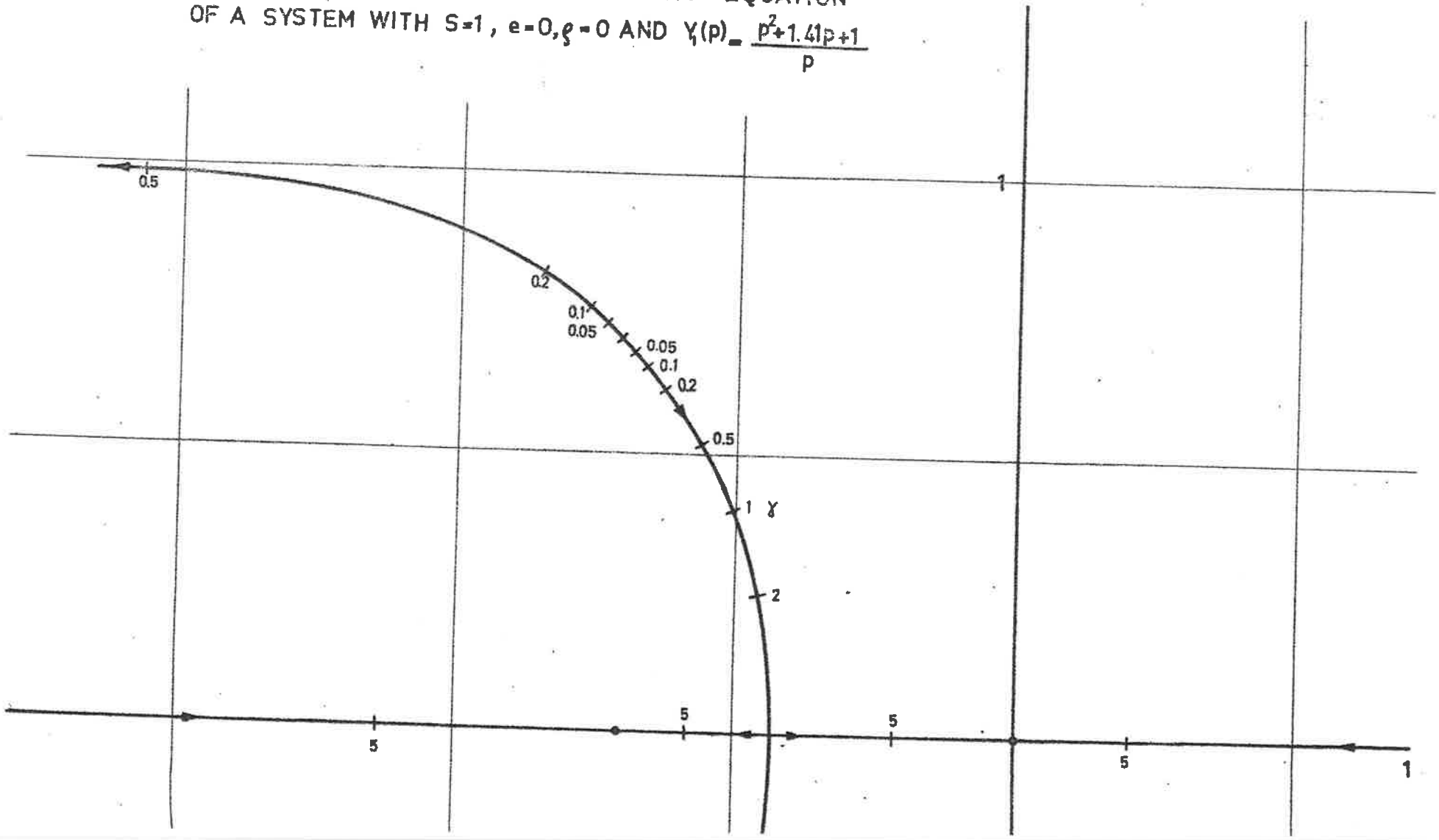

PLATE 8.22

ROOTLOCUS WITH RESPECT TO THE CROSSCOUPLING COEFFICIENT γ FOR THE CHARACTERISTIC EQUATION OF A SYSTEM WITH $S = 3$ $e = -1$ $\varsigma = 0$ AND $Y_1(P) = \dfrac{P^2 + 1.41P + 1}{P}$

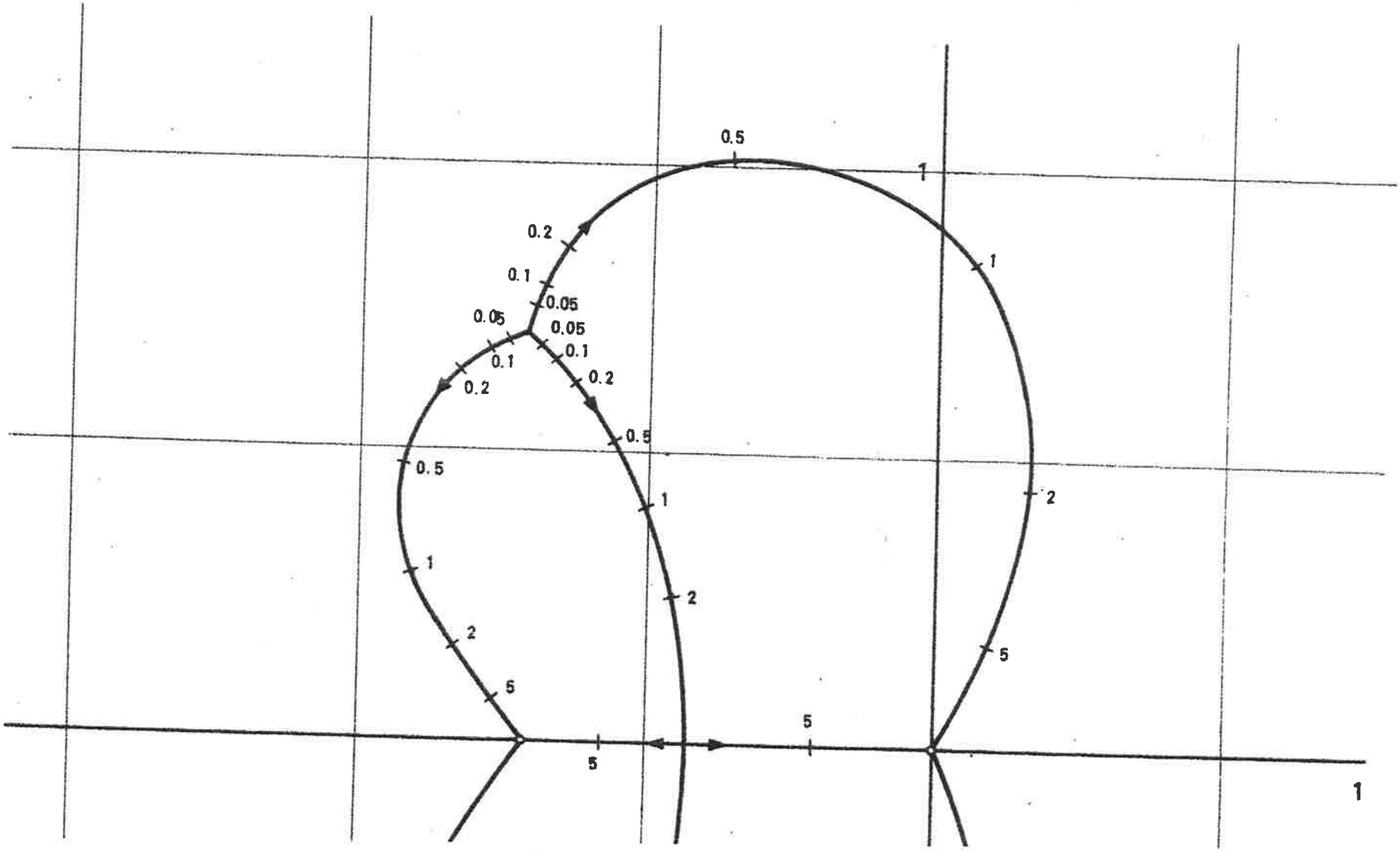

PLATE 8.23

ROOTLOCUS WITH RESPECT TO THE COUPLING COEFFICIENT γ FOR THE CHARACTERISTIC EQUATION OF A SYSTEM WITH $S = 3$, $e = 1$, $\varrho = 0$ AND $Y_1(p) = \frac{p^2 + 1.41p + 1}{p}$

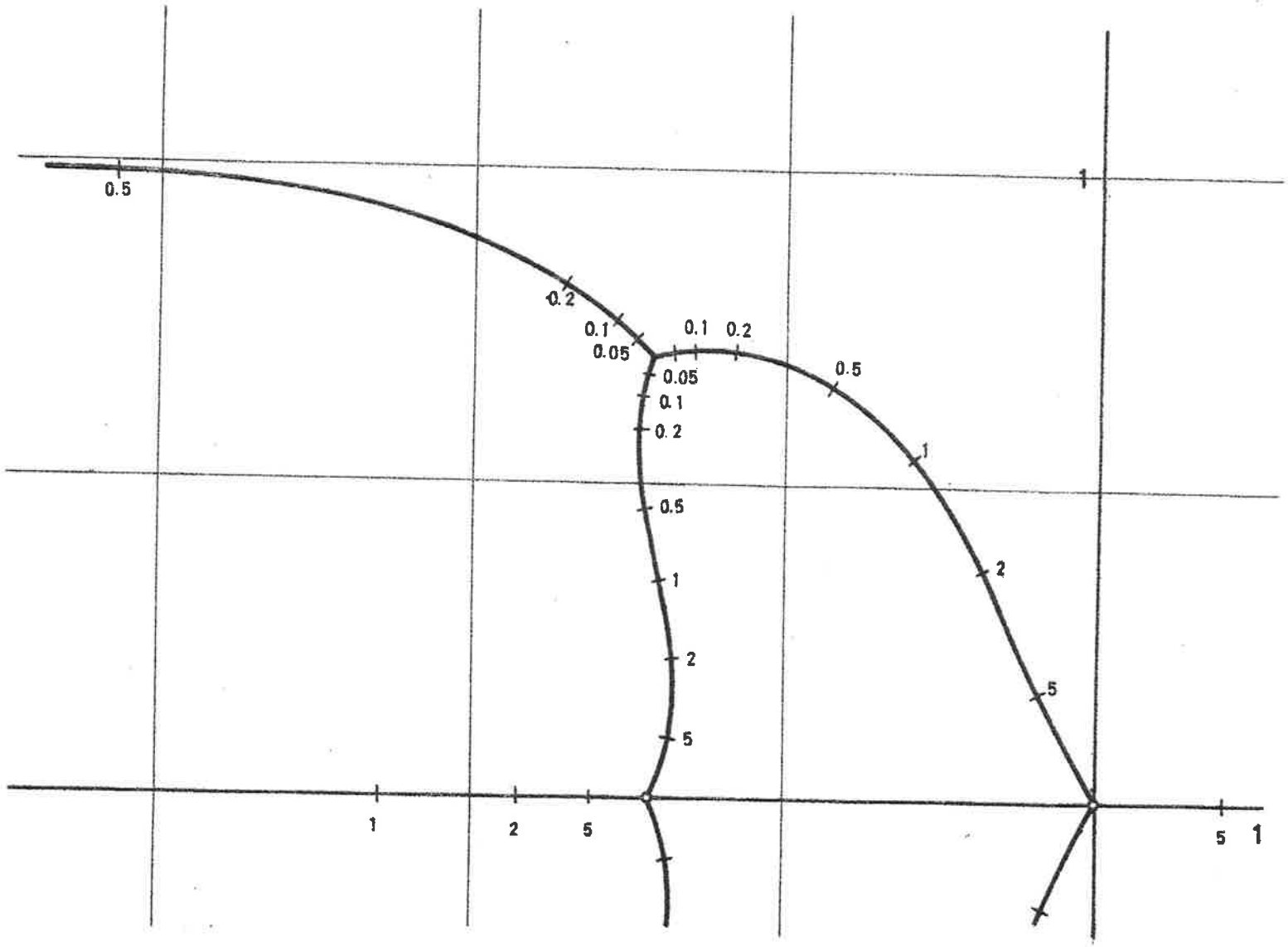

PLATE 8.24

ROOTLOCUS WITH RESPECT TO THE COUPLING COEFFICIENT γ FOR THE CHARACTERISTIC EQUATION OF A SYSTEM WITH $S=5$, $e=0$ $\varrho=0$ AND $Y_1(p)=\frac{p^2+1.41p+1}{p}$

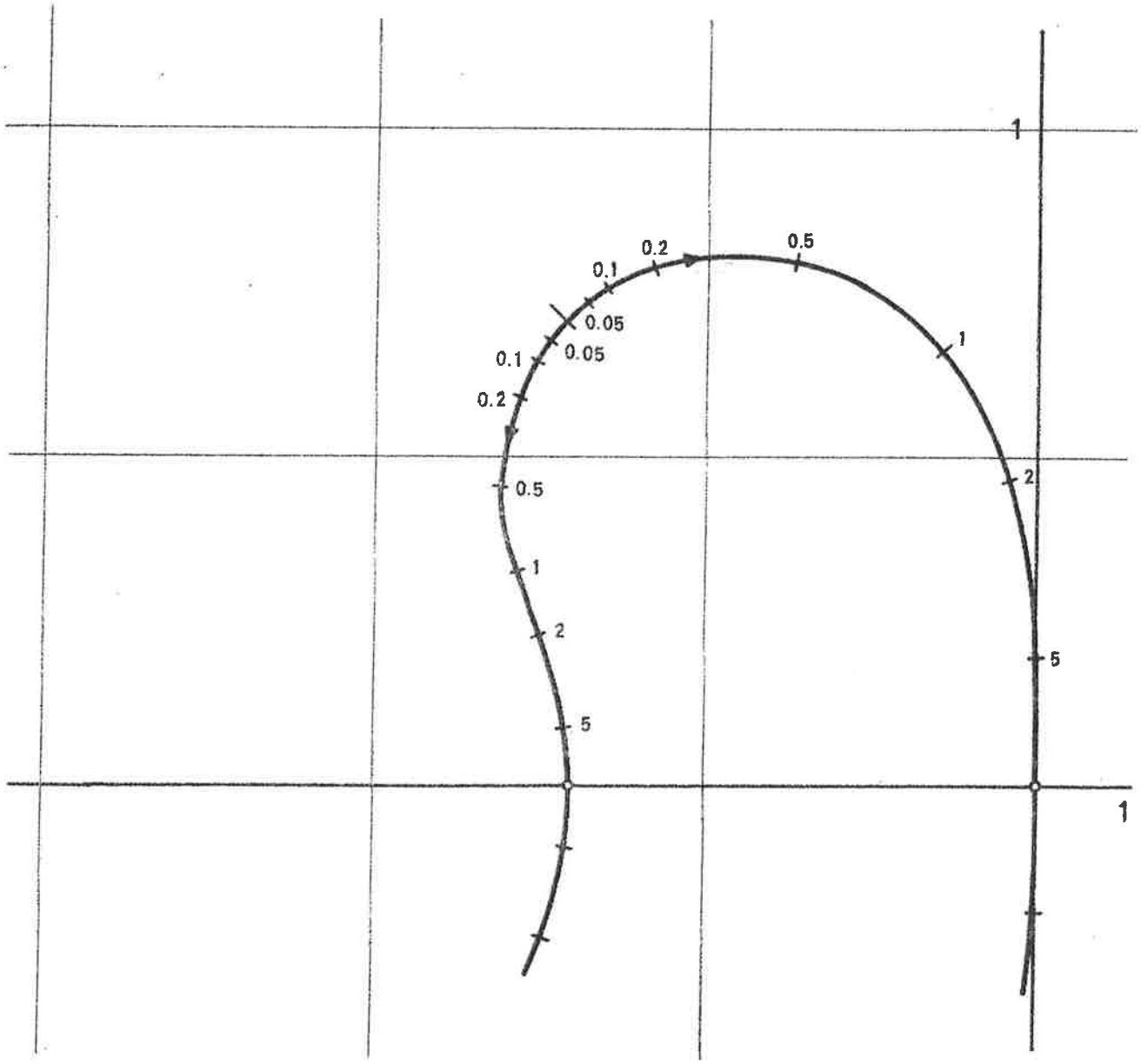

3.3 A remark concerning a question of practical interest

The condition

$$\begin{cases} s \geq 3 \\ \ell = 0 \end{cases}$$

plays an important role in the previous discussions of stability. The above condition was a consequence of the necessity for the equation det $W(p)$ to be stable. As the condition depends on the orientation of mechanical axes it is impossible to satisfy the condition exactly. The reader might therefore expect that the systems whose stability depend on the above condition in practice are unstable. This is not necessarily the fact. In an actual application we have to consider the fact that the condition cannot be exactly satisfied, but we must also notice that the input axes of the gyros are not mutually orthogonal.

Considering this fact the above condition is replaced by a similar condition which tells that ℓ should lie in an interval including 0.

In an actual application we also have to consider variations in the angular velocities of the gyros.

The orientation of the gyros sometimes used at MIT is s=5 and ℓ=0 with two output axes sometimes horisontal. The reasons for this choice are due to other facts than the stability considerations. According to professor Markey no instability generated by the output axis sensitivity of the gyros has been noticed for systems of this type if the electronic bandwidth is sufficiently high.

Reference

1. Characteristics of a stable platform.
TTN-Gruppen Report 591201