LUND UNIVERSITY

Efficient Integration of Distributed Generation in Electricity Distribution Networks - Voltage Control and Network Design

Leisse, Ingmar

2013

Link to publication

Citation for published version (APA):
Leisse, I. (2013). *Efficient Integration of Distributed Generation in Electricity Distribution Networks - Voltage Control and Network Design*. [Doctoral Thesis (monograph), Division for Industrial Electrical Engineering and Automation].

Total number of authors:
1

General rights
Unless other specific re-use rights are stated the following general rights apply:
Copyright and moral rights for the publications made accessible in the public portal are retained by the authors and/or other copyright owners and it is a condition of accessing publications that users recognise and abide by the legal requirements associated with these rights.
• Users may download and print one copy of any publication from the public portal for the purpose of private study or research.
• You may not further distribute the material or use it for any profit-making activity or commercial gain
• You may freely distribute the URL identifying the publication in the public portal

Read more about Creative commons licenses: https://creativecommons.org/licenses/

Take down policy
If you believe that this document breaches copyright please contact us providing details, and we will remove access to the work immediately and investigate your claim.

LUND UNIVERSITY

PO Box 117
221 00 Lund
+46 46-222 00 00

Efficient Integration of Distributed Generation in Electricity Distribution Networks

Voltage Control and Network Design

Ingmar Leiße

LUND UNIVERSITY

Doctoral Dissertation
Department of Measurement Technology and Industrial Electrical Engineering

2013

Department of Measurement Technology and Industrial Electrical Engineering
Faculty of Engineering
Lund University
Box 118
221 00 Lund
SWEDEN

http://www.iea.lth.se

ISBN: 978-91-88934-63-5
CODEN: LUTEDX/(TEIE-1071)/1-214/(2013)

© Ingmar Leiße, 2013
Printed in Sweden by Tryckeriet i E-huset, Lund University
Lund 2013

The answer, my friend, is blowin' in the wind...

(Bob Dylan)

Abstract

Distributed generation (DG), i.e. generation connected to the low and medium voltage distribution network (DN), has been increasing a lot during recent years. Thus the traditional assumption of a unidirectional power flow and a voltage decrease along the distribution feeders is no longer valid in all operation conditions.

Voltage control in these networks is often limited to the on-load tap changer at the high voltage/medium voltage substation. Thus keeping the voltage at the customer connection point, which is an important quality criterion for electricity supply, within the limits may become a challenge. Since most of the available voltage band is assigned to the voltage decrease caused by the load, only a small part is available for a voltage rise from DG power injection. To overcome this limitation, traditionally the network has to be reinforced, which is always a solution but quite expensive.

Coordinated voltage control is introduced as an alternative to avoid or postpone network reinforcement. The proposed algorithm receives actual voltage measurements from electricity meters at the customer connection points. The voltage setpoint at the substation and the reactive and active power output of the DG units are then adjusted to keep the voltage within the limits. Thereby the voltage band is used more efficiently and as a last option, the active power output from the DG units may temporarily be limited and some energy spilled. The voltage control scheme has been verified by power flow simulations of an existing DN in Sweden using real time series for consumption, photovoltaics and wind generation. It turned out that the need for active power curtailment is low even for large DG penetration if applying coordinated voltage control. Next, a passive DN has been turned into an active DN by introducing coordinated voltage control in a field test. The main objective has been to test the effect of asynchronous measurements from electric-

ity meters and DG units and the impact from the communication. Control with asynchronous measurement turned out to be possible and curtailment has been reduced considerably.

As coordinated voltage control uses active power curtailment as a last option to keep the voltage within the limits, it is, especially for the DG developer, important to estimate, to what extent curtailment will be utilised. Based on this data DG developers have to decide, if they would prefer a more expensive connection, which is able to always transfer the maximum DG output, i.e. a firm connection, or if they prefer to accept some temporary restrictions, if it is at a lower cost and faster available.

Power flow simulations could be used to determine the expected curtailment. They are exact but they require a lot of input data and are time consuming, especially for calculations over large time series. Therefore a 5-Step-Method, which is fast, simple-to-apply and needs only a reduced set of input data, has been developed. The 5-Step-Method can be applied to calculate the expected curtailment for a DG unit with a predefined nominal output at a given location. However, the method could also be applied to determine the maximum nominal DG output at a given location, if a predefined amount of curtailment can be accepted.

To verify the 5-Step-Method, it is applied on DG connections in a generic test system. The obtained results are quite close to the ones from power flow calculations for the considered scenarios. The results for the expected curtailment calculated by the 5-Step-Method are however not conservative compared to power flow calculations, i.e. showing a larger amount of curtailment, for all scenarios.

Finally the necessary steps for implementing coordinated voltage control and non firm DG connections are summarized both for distribution network operators and DG developers.

Acknowledgements

At first, I would like to express my gratitude to my supervisor Dr. Olof Samuelsson for enabling me to become a PhD student in Lund about five years ago and supporting me on the way through my PhD studies. During this time he has encouraged me with guidance, suggestions and productive discussions regarding my work. I would also like to thank my co-supervisor Dr. Jörgen Svensson for his support by valuable discussions about my work and developing ideas. I am grateful for their careful proofreading and for the discussion about the outline of this thesis.

After my licentiate degree in 2011 E.ON Elnät employed me as an industrial PhD student to proceed financing my project which gave me the opportunity to continue within the same topic. I would like to thank all the people at E.ON Elnät who supported me by answering my neverending questions about network planning practice.

Especially I would like to thank the members of the steering group Pierre Andersson-Ek, Anton Dahlgren, Charlotte Klippel and Johan Nilsson from E.ON Elnät but in particular also Professor Torbjörn Thiringer from Chalmers University of Technology for his valuable comments and helpful suggestions during the meetings.

Many thanks are also directed to the people from companies that have been involved in the field test. Without their support it would not have been possible to get it in operation. To mention the ones I have been in contact with most often: Anton Dahlgren from E.ON, Gojart Neziri from Enercon, Karrydvind and ONE Nordic.

Special thanks go to my friends and room mates Francesco and Johan for creating a friendly working environment. They have been involved in numerous

discussions of technical problems and philosophical aspects. I would like to express my gratitude to Francesco for his kind company during conferences and Johan for his friendly company in many situations and, not to forget, the "ice cream breaks".

A sincere gratitude goes to all my colleagues working at the division of Industrial Electrical Engineering and Automation for the enjoyable working environment. In particular I would like to address the teaching staff in the course "ETG" for many joint hours and acknowledge the help received from Carina, Ulrika and Getachew.

Last but not least my parents deserve many thanks for their great love and support of any kind. I would like to thank my brother for keeping me company when visiting home. A particular thank is devoted to my girlfriend Anne for her love, company and support during the past years. I would like to dedicate this thesis to them and all my friends who have been a part of my life during the past years.

Lund, November 2013
Ingmar Leiße

Contents

1 Introduction **1**
1.1 Background 1
1.2 Motivation 4
1.3 Objectives 12
1.4 Contributions 15
1.5 Outline of the Thesis 19
1.6 Publications 20

2 Distributed Generation in Distribution Networks **23**
2.1 Physical Impact of DG 23
2.1.1 Medium Voltage Distribution Networks 24
2.1.2 Low Voltage Distribution Networks 27
2.2 Requirements and Limitations for Connection of DG 29
2.2.1 Physical Impact of DG Connection 29
2.2.2 Firm versus Non Firm Capacity 33
2.2.3 Regulations and Grid Codes 34
2.3 Generic Network Model 35
2.3.1 Network Structure 36
2.3.2 Voltage Variations 39
2.3.3 Network Losses 43
2.4 Summary 44

3 Control Methods **45**
3.1 Voltage Control Alternatives 45
3.1.1 On-load Tap Changer 46
3.1.2 Reactive Power 47
3.1.3 Active Power Curtailment 47
3.1.4 Load Control 48

3.2 Automation in Distribution Networks 49
3.2.1 Automatic Voltage Control Relay 50
3.2.2 Electricity Meters 51
3.3 Active Distribution Networks 52
3.3.1 Local Control 52
3.3.2 Coordinated Control 54
3.4 Summary 58

4 Control Verification in Svalöv Network 61
4.1 Test System 61
4.2 Simulation of Coordinated Voltage Control 63
4.2.1 Local Control and Unity Power Factor 67
4.2.2 Local Control and Variable Power Factor 73
4.2.3 Coordinated Control and Unity Power Factor 76
4.2.4 Coordinated Control and Variable Power Factor . . . 79
4.3 Summary 83

5 Field Test 87
5.1 Field Test Network 88
5.2 Field Test Equipment 89
5.2.1 Wind Turbine 89
5.2.2 AVC Relay 92
5.2.3 Electricity Meters 93
5.2.4 Communication 95
5.3 Implementation of Coordinated Voltage Control 97
5.4 Evaluation of Data 101
5.4.1 Voltage Measurements and AVC Controller 101
5.4.2 Wind Turbine Active and Reactive Power and Voltage 106
5.4.3 Asynchronous Measurement Data 112
5.5 Summary 114

6 Distribution Network Planning 117
6.1 Introduction to Network Planning 117
6.1.1 Requirements for Distribution Systems 118
6.1.2 Limiting Components 118
6.1.3 Traditional Network Design Rules 120
6.1.4 Aspects of Dimensioning with DG 122
6.1.5 Example for DG Capacity Limit due to Voltage Rise 123

6.2 Automation versus Network Reinforcement 125
6.2.1 Aspects of Network Reinforcement 125
6.2.2 Aspects of Network Automation 126
6.3 Network Planning for Active Distribution Systems 128
6.4 Connection of Non Firm Capacity 129
6.4.1 Probabilistic Analysis of Load 130
6.4.2 Probabilistic Analysis of Generation 131
6.4.3 Results of Probabilistic Analyses 132
6.5 Summary 132

7 The 5-Step-Method 133
7.1 Input Data 134
7.2 Simplifications and Limitations 135
7.3 Planning Steps of the 5-Step-Method 135
7.4 Verification of the 5-Step-Method 140
7.4.1 Separated Load and Generation Feeders 140
7.4.2 Mixed Load and Generation Feeders 145
7.5 Summary 148

8 DG Capacity and Restrictions 151
8.1 Generation of Time Series 152
8.2 Calculation of Restrictions 155
8.2.1 Determination of Active Power Curtailment 156
8.2.2 Determination of DG Capacity 159
8.3 Summary 165

9 Application Considerations 167
9.1 Linking Voltage Control and Determination of Restrictions . 167
9.2 Distribution System Operator 169
9.2.1 Monitoring Actual Network Status 169
9.2.2 Implementation of Control Algorithm 171
9.2.3 Network Losses 174
9.2.4 Reliability and Maintenance 176
9.2.5 Agreements 177
9.2.6 Implementation Guidelines 178
9.3 Distributed Generation Developer 178
9.3.1 Cost Efficient Connection 179
9.3.2 DG Capacity and Restrictions 180

9.3.3 Agreements 181
9.3.4 Implementation Guidelines 182
9.4 Summary 183

10 Conclusions and Future Work 185
10.1 Conclusions 185
10.2 Future Work 189

References 193

Chapter 1

Introduction

This first chapter gives an introduction to the work in this thesis. The motivation for this work is presented and the contributions from the work are summarized. Finally an overview of the other chapters is given.

1.1 Background

Electricity power generation once started with local generators often connected to steam engines. At that time electricity distribution networks were mainly covering small areas which were equipped with their own generators. Since that time electricity networks have become more and more interconnected and today electricity networks form wide area transmission networks over thousands of kilometres. While the networks became larger and more widespread, the electricity power consumption was increasing and large power plants were built to supply the residential, industrial and other loads with electrical power. The large power plants are in most cases coal or gas fired thermal power plants or nuclear power plants. In areas with convenient conditions large scale hydro power plants are also quite usual. Common for all of the large scale power plants is the fact that they are connected to high voltage (HV) transmission networks and the power is then transferred through the transmission network to the distribution network and finally to the customers.

During recent years the emission of green house gases and in particular of

carbon dioxide (CO_2) has become a main topic even on the global political agenda. The European Commission for example has set up the 20/20/20 climate/energy targets which contain 20 % reduction of greenhouse gas emissions compared to 1990 levels, increasing the share of renewable energy sources to 20 % and 20 % increase in energy efficiency until 2020 [1]. The generation of electricity from gas and coal fired power plants is discharging carbon dioxide and has thus been pointed out as one of the key topics when discussing CO_2 emission reductions. As nuclear power plants are controversial due to the operation security and their nuclear waste, they are not an option. Electricity from hydro power plants is renewable but new units can only be built at suitable locations and are often controversial regarding their impact on the flora and fauna. To achieve the climate and energy targets electricity from all renewable sources is valuable and renewable energy sources (RES) in the range from several kilowatt up to some megawatt have become popular for the generation of electricity since some years ago [2]. Wind power (WP) has been successful for several years but also photovoltaics (PV) and biomass-fired combined head power (CHP) have been increasing a lot in many European countries during recent years.

In contrast to the conventional large scale power plants with a generation capacity of some hundreds up to more than 1000 MW per unit, these new generation units driven by renewable sources are often small scale. Thus they are usually dispersed and connected to the distribution network, where also customers are connected. Generation units located in and connected to the distribution network is one definition for distributed generation (DG) [3]. Figure 1.1 shows a schematic diagram of a distribution network with distributed generation connected.

While transmission networks are built to transfer power from large generation units (over long distances) to the load areas, distribution networks are normally planned and built to distribute the power from the transmission network to the loads. Distribution networks can thus be considered as pure load supply networks. With the connection of DG to the distribution network this needs to be abandoned and unidirectional power flow from the generation units connected to the transmission network to the loads in the distribution network can no longer be assumed.

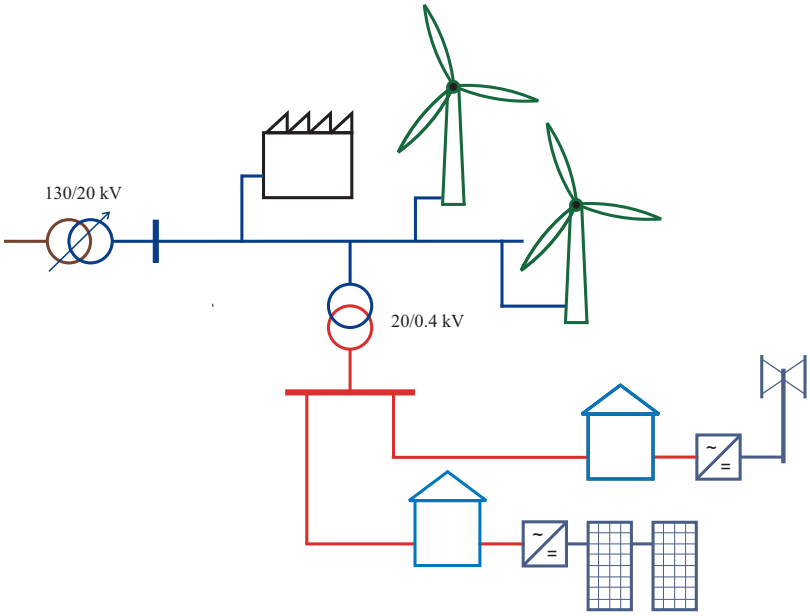

Figure 1.1: Schematic of a medium and low voltage distribution network with substations, industrial medium voltage load, wind power at medium voltage, low voltage residential load and wind power as well as PV generation at the customer side.

As long as only few and small DG units are connected to the distribution network, the load is still predominating and the power injection from the DG units will only reduce the total network load. In such cases it is often possible simply to consider the DG units as negative loads. However, when the penetration of DG is increasing and the power flow is reversed at least during some periods, new challenges such as voltage rise along distribution feeders appear.

In passive distribution networks, as it still is the common type, there is no coordination between the actual network situation and the devices connected to it. Such networks have to be designed to tackle worst cases as maximum load/minimum generation and minimum load/maximum generation by dimensioning the lines and other equipment to fulfil the requirements. Active distribution systems in contrast assume at least some kind of feedback or par-

ticipation from the devices connected to the distribution network. Thus worst case scenarios may be handled by network automation instead of physical enhancement and temporary restrictions can be accepted in some extent to increase the total network utilisation.

1.2 Motivation

Distribution networks, as in operation today, are mainly passive networks and planned and built to cope with load connected. The two main issues, which are determining the line dimensions, are the voltage variation along the lines and transformers as well as the thermal constraints for maximum load. Since a unidirectional power flow from the substations to the customers can be assumed, the highest voltage could be expected at the substations whereas the lowest voltage occurs at the customer points of connection. Hence, the voltage is decreasing from the substation along the feeders to the customers.

Since the network is dimensioned so that the minimum voltage is sufficient even under periods with maximum load, voltage control is not needed when the voltage at the substation is chosen accordingly. Thus the voltage at the substation is normally chosen higher than the nominal value to compensate for the voltage decrease towards the load connection points and still achieve an acceptable voltage at the customer points of connection [4]. The substation voltage can be adjusted with an on-load tap changer (OLTC) at many substation transformers. Even if the voltage setpoint should ideally depend on the load, in most cases this is not done and the substation voltage is simply kept constant [5]. This is sufficient since load is normally quite well predictable and the seasonal and diurnal load are usually considered when deciding the transformer voltage control settings.

The connection of generation, which may change and reverse the power flow in the distribution networks, affects voltage just like the consumption does. This was normally not considered when the networks were dimensioned [6]. Hence, the generation capacity, which can be connected to such distribution networks, is therefore often unnecessarily limited by e.g. voltage limits. The available voltage band for the DG units is often quite narrow as the network

voltage is usually controlled closer to the upper voltage limit as it would be necessary to satisfy the voltage criteria for the load supply during most of the time. This voltage constraint is an issue and in many cases a limiting factor for the amount of DG capacity that is possible to connect to an existing distribution network without network reinforcement [7, 8].

In many cases distribution network operators (DNO) also prefer voltages closer to the upper voltage limit as it tends to reduce the losses when constant power loads are assumed. But in distribution networks with generation the DG capacity is often limited further due to the high average voltage in the network. Moreover there are studies indicating that the energy consumption in distribution networks decreases if the network voltage is reduced [9].

Figure 1.2 illustrates the possible voltage trends along a distribution feeder for different feeder characteristics and voltage setpoints at the substation. In Figure 1.2(a) the voltage setpoint at the automatic voltage control (AVC) relay, that adjusts the on-load tap changer position according to a voltage setpoint, corresponds to the typical setup in distribution systems for load supply with the setpoint for substation busbar set higher than the nominal voltage. The voltage trend follows the lower black solid line in the figure as the voltage decreases from the substation along the feeder. The upper black solid line in Figure 1.2(a) shows the voltage trend for a feeder connected to the same transformer, but with maximum generation connected to it. In that case the voltage increases from the substation along the feeder. The range between the lower voltage limit (lower dashed red line) and AVC setpoint (dashed blue line) is the range that is available for voltage decreases by loads. This leaves the range between the AVC setpoint (dashed blue line) and the upper voltage limit (upper dashed red line) available for voltage increases at the generation feeder. If the voltage increase is larger than this range, overvoltage occurs. Because of the chosen configuration, i.e. AVC setpoint higher than nominal voltage, the voltage range remaining for voltage decrease by loads is normally larger than the voltage range available for voltage increase caused by DG. But most of the time the load is below maximum load, making the voltage decrease at the load feeder lower and the setpoint for the AVC could be set according to Figure 1.2(b). This makes a larger voltage range available for voltage rise and increases the amount of generation that can be received without overvoltage during periods when load is not at its maximum. To which extent lower AVC

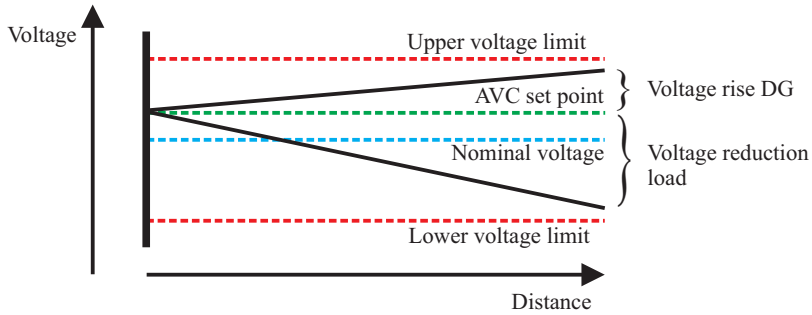

(a) AVC setpoint for maximum load gives limited room for DG and its associated voltage rise.

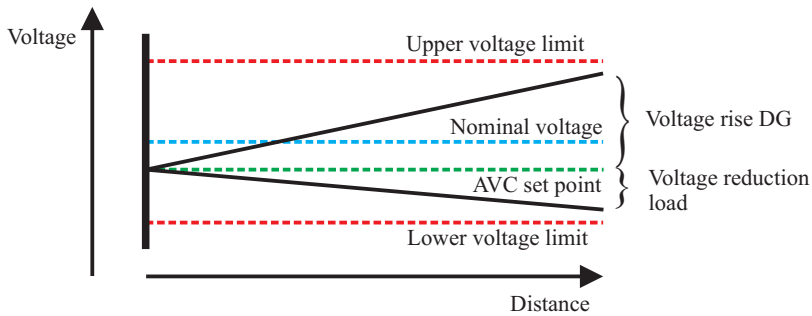

(b) AVC setpoint for actual load gives more room for DG and its associated voltage rise.

Figure 1.2: Illustration of voltage profile along feeders when load or generation is connected. Increasing voltage for a generation feeder (upper black solid curve) and decreasing voltage for a load feeder (lower black solid curve) connected to the same transformer with automatic voltage control (AVC).

setpoints can be utilised, depends on the correlation between load and the DG source. Another case could occur when load and generation are on the same feeder and have the same power. This results in a constant voltage trend between the two black lines.

When small scale generation units were coming up, they were often treated as negative loads [10]. That means it was ensured that the existing lines are capable to transfer their capacity and that the voltage rise caused by the DG

units does not violate the network voltage limits assuming maximum load as illustrated in Figure 1.2(a). Afterwards no more attention was given to the DG units. This method, which in literature also is called the fit-and-forget strategy, is only applicable up to some extent of DG connection before it requires expensive and time consuming network reinforcements to increase the DG capacity further [8].

Since the early days when the existing distribution networks were built, technique has evolved a lot. Communication has become less expensive and more widespread and thus is available in a higher degree. While communication and remote control in transmission networks are quite common since a long time, there is still not much communication used in distribution systems. In high voltage to medium voltage substations communication for measurement readings and control of switching equipment is quite common. However, further down in the network towards the customer communication becomes rare, meaning that the amount of data available from the medium voltage (MV) and low voltage (LV) part of the network is limited. This is currently changing when active distribution networks, also referred to as Smart Grids and often based on introduction of communication, are becoming more spread. More definitions for the term Smart Grids are available in the literature [11].

Electronic electricity meters have been installed in many countries the last few years. In the Swedish case they cover nearly 100 percent of the customers since at least monthly measurement readings are mandatory since 2009. These meters are practically always remotely read and need therefore some kind of communication links. Suddenly communication has thus arrived at the low voltage distribution network and even at the point of customer connection, where the network voltage is an important quality criterion that has to fulfil several standards and recommendations [12, 13]. Today the communication is mainly used for the transfer of energy measurement readings and in some cases for alert messages as well. These alert messages, which are normally collected in fixed intervals together with the energy readings, can for example contain information about voltage limit violations. Thus, there is some kind of feedback from the network, but it is neither available in real time nor used for network control.

Capacity and voltage limitations in existing networks are today mainly over-

come by network reinforcement which always is a possibility to increase the network capacity but at a high cost. Alternative methods based on e.g. more active network control for increasing the DG capacity in existing networks are in general not considered. Many modern DG units however have the ability to participate in active network management (ANM) by adjusting their active and reactive power output. Thus the nominal output of a DG unit is normally not allowed to be larger than the minimum hosting capacity, i.e. the minimum capacity the network is able to absorb, of the connection point [14].

When determining the nominal DG output at a considered point of connection in an existing distribution network worst case scenarios are assumed. They are comparatively well known and fast to calculate. But for intermittent generation as from wind power (and PV to some extent) this connection policy is cost intensive when the amount of connected DG is increasing. This is because wind turbines produce rated power only during a limited part of the year. It is therefore reasonable to install rated power greater than the maximum that the network can always accept, also referred to as firm capacity. When the actual production reaches the network limit, it is limited to what the network can accept resulting in some lost or curtailed energy production.

Example: A wind turbine is to be connected to a specific connection point with a worst case based firm capacity of 0.8 MW. Figure 1.3 shows the duration curves for two wind turbines with nominal output of $P_{WT,rated} = 0.8\,\mathrm{MW}$ (blue line) and $P_{WT,rated} = 1.0\,\mathrm{MW}$ (green line) based on a measured wind profile with hourly data over one year. According to the traditional connection procedure only the wind turbine with a nominal output of 0.8 MW is allowed to connect to the chosen connection point (blue area). However, this wind turbine will generate 0.8 MW only rarely, which results in a very low utilisation factor of the available hosting capacity as the average output is only 25 % of the nominal output (dashed blue line). Connecting instead a larger wind turbine with a nominal output of 1.0 MW most of the time it can operate as usual and in the illustrated case 20.6 % more energy can be fed-in to the network (green area). Only during some short time periods (6.8 %) the generation has to be curtailed with 3.6 % of the total available energy (red area). Even better is the situation if the hosting capacity could temporarily be increased by changing the setpoint of the substation voltage or by drawing reactive power with the wind turbine.

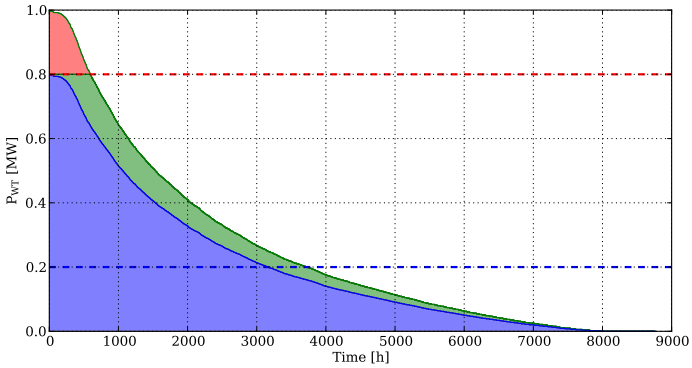

Figure 1.3: Duration curve of available wind power from two wind turbines with rated capacities of $P_{WT,rated} = 0.8\,\text{MW}$ and $P_{WT,rated} = 1\,\text{MW}$ based on hourly measurements over one year of a wind turbine connected to the E.ON distribution network in the South of Sweden. Restrictions that apply if the DG output is temporarily greater than the hosting capacity of the connection point indicated by dashed red line. Coloured areas indicate energy delivered by 0.8 MW wind turbine (blue), energy lost with 1.0 MW wind turbine if network limit is 0.8 MW (red) and additional energy which is still delivered (green).

Compared to the output from wind power, the power output from PV is quite regular at clear weather. At noon the production is typically at its maximum and there is no generation during the night. The duration curve has a similar shape as shown for wind power in Figure 1.3. However, the capacity factor for PV is usually smaller than for wind power. Thus the duration curve is more steep. For an PV installation in Sweden an average output of 12 % has been found from measurements over one year.

The variable nature of electricity production from variable sources such as wind power and PV motivates a probabilistic approach. This is not considered in methods based on worst case scenarios which are normally the standard procedure for the planning of DG connection. However, as illustrated by the duration curve of the wind turbine above, probability seems to be important in case of connection capacity for intermittent generation. Otherwise there

is a risk of establishing connections with large capacities and low utilisation factors at a high cost.

In the German electricity system around 32 GWp[1] of photovoltaics have been connected to the grid until the end of 2012 [15]. The major part of these generation units ($\approx 70\,\%$) are connected to the low voltage distribution system, where voltage rise caused by the injection of active power is already an issue [16]. Therefore voltage rise due to the connection of distributed generation is not only a subject on medium voltage distribution networks with wind power and photovoltaics, but also on low voltage distribution systems.

To allow the integration of an increasing amount of distributed generation, research is needed to find suitable solutions for an efficient integration of distributed generation in existing networks. A summarizing overview of research relevant to the topic is given in the following paragraphs. Since DG and especially wind power have been increasing for some time, distributed generation and its connection to the distribution network have been the subject of several publications in recent years [17]. In many cases the voltage rise caused by DG units is identified as a key issue [18]. A lot of approaches for voltage control at the substation or by the DG units have been presented [19, 20]. Also coordinated voltage control has been mentioned in various characteristics [21–28] and even been implemented in a demonstration network [29]. Nevertheless losses and other restrictions as for example from the protection systems have been considered as well [6, 30, 31]. Various aspects and characteristics are discussed in [32].

The benefits from active management schemes of distribution systems are studied and the OLTC transformer voltage control is identified as beneficial for a large and cost efficient increase of the DG penetration [7]. The impact of DG on the OLTC and its potential opportunity for voltage control is examined in [4, 33]. Adapting the setpoint of the automatic voltage control relay at the tap changer according to state estimation data is discussed in [34]. The effect of DG on the voltage control with OLTC has also been studied [10, 35]. The reactive power capability of different types of distributed generators are analysed in [36]. Reactive power is identified to have the ability to control

[1] *Gigawatt peak* (GWp) is the nominal output of photovoltaic modules under standard test conditions.

node voltage to some extent also in distribution networks and voltage control capabilities of different types of wind turbines are discussed [37]. Voltage control by using reactive power is less effective in low voltage distribution networks and challenged in some publications [38]. However, benefits from reactive power consumption by PV generators in German low voltage networks are also studied [39] and a more than doubled absorption capacity for low voltage distribution networks is found for dynamic and voltage dependent reactive power consumption by PV inverters [40].

Using electricity meters for collecting statistical information about the voltage level at customer side on a weekly basis is proposed in [41]. Various communication technologies for electricity meters in the UK have also been compared [42]. Furthermore, research in which gathered voltage measurements from electricity meters are used to optimize the voltage in distribution systems has been published recently [43].

The hosting capacity for distributed energy resources in existing distribution networks limited by the voltage rise has been analysed and identified as an economical question for applying new technical means [14]. The connection of DG with restrictions, also known as non firm connections, for a cost effective integration of low capacity factor DG as wind power is discussed in [44, 45]. To study the impact of non firm connection policies, a case study is performed in the Irish system [46]. Benefits from non firm connections together with active network management with the objective of maximizing the DG capacity in an existing distribution system are shown in [47]. Probabilistic approaches are mentioned in various relations. Stochastic modelling of load and generation is a main issue in [48] but also in [49]. Modelling of statistic wind speed or wind power data has also been presented in [50]. Including active voltage control in network planning has been suggested in [51] and as a consequence statistical distribution network planning for voltage control selection based on statistical data in a network information system is proposed in [52].

1.3 Objectives

The integration of DG in existing distribution networks is a challenge that has to be solved in the near future. The standard solution of treating DG units as negative loads, as it has been done in the past, is only suitable for a low DG penetration. Also network rebuilding and reinforcement should probably not be the first choice when DG should be connected. Although it is a possibility, this approach is often time consuming and expensive. Efficient integration of distributed generation in existing distribution networks is essential when the amount of distributed generation is increasing and thus an overall objective of this thesis. The efficient integration of DG means a better utilisation of the existing network infrastructure, i.e. connection of more DG capacity at reasonable costs, without abandoning the high reliability of present distribution networks. To understand the impact of DG on the existing distribution network voltage, a convenient network model is needed.

The objectives of this thesis can be divided in two main parts. In the first part the focus is on increasing the DG capacity for existing distribution networks by using automation for network control. Thus the hosting capacity is increased during most of the time and in periods when the DG output exceeds the actual hosting capacity, a reduction of the active power output from the DG units has to be accepted to maintain the voltage limits. Assuming that the automation developed in the first part is available, the second part of the thesis focuses on network planning for distribution systems and determining the hosting capacity of a specific connection point in an existing distribution system with automation. Since the use of curtailment practically permits the connection of DG units of any nominal output, a further objective is to quantify the curtailment that results for a DG unit with a given nominal output at a specific connection point.

Already today electronic electricity meters are equipped with communication to transfer the measurement readings and therefore they are also remotely readable. In the future they may be used to obtain information about the current network situation, too. Probably communication needs to be upgraded to satisfy the needs for an active network control including the measurements from the electricity meters. But the benefits from better network information

and more efficient use of the network will compensate for the needed effort. The network voltage, one of the most important criteria at the customer connection point, has no longer to be based on assumptions, which introduce uncertainty and require margins to the limits, but could be monitored continuously. Thus data from electricity meters should be considered when automation is introduced to shift to active distribution networks for fast and cost efficient integration of distributed generation with an acceptable trade off between cost and availability of the connection capacity. Beside conveniences of active network control with DG also network planning for future rebuilding would gain from that information, which therefore should be included for network operation and planning.

The use of automation in distribution systems for voltage control has to be verified as efficient regarding the amount of fed-in energy and the network losses before it can be put into operation. Therefore simulations are needed in a network model that includes real network data. In this work the most important types of DG, wind power and photovoltaics, are considered on the low and medium voltage level.

The theoretical outcomes from this work, which will be confirmed by simulations based on data from a real network, should be tested in practice. Thus a field test is needed and an existing distribution network should be upgraded to an active distribution system. The field test system, with a wind turbine participating in voltage control and electricity meters monitoring the actual network situation, should be used to study the influence of the different delays in communication and the asynchronous gathering of measurement data on coordinated voltage control. And finally the whole process for upgrading an existing distribution network to an active distribution system with automation is tested.

Existing distribution networks have been planned for the purpose of load supply. For future distribution networks this paradigm will probably change and in the next generation of distribution networks loads and generation units will coexist side by side. This calls for new requirements in the planning process of distribution networks.

Another main objective of this thesis is on the available hosting capacity for

the connection of DG in existing networks under worst case assumptions and the restrictions which will occur if a larger amount than that capacity is connected. Determining the DG hosting capacity is an important issue when DG is connected to existing networks. The hosting capacity for connection of generation at a predefined location is often identified by simplified calculations based on some known data and some assumption about the network and the loads. These calculations are often based on worst case scenarios in which it is assumed that the network should be able to absorb the nominal DG output at each time. Such a requirement is limiting the maximum DG capacity a lot even though maximum generation occurs only during some short time periods over the year. Probabilistic approaches could be an alternative to worst case scenarios when it comes to the determination of the DG hosting capacity of an existing network. Considering limitations at the connection points of the DG units will be necessary for their efficient integration and should be considered for future network planning. Thus a fast method based on easy available input data is needed for determining the hosting capacity.

When the amount of connected DG capacity exceeds the firm capacity of the connection point, that is the guaranteed fed-in capacity at each time, it is important to know how often and to which extent restrictions will occur. Load but in particular the generation from intermittent power sources as wind and sun is varying over the time. Thus probabilistic approaches are needed to determine the amount of restrictions that are expected at the connection point and to which extent these limitations could be shifted by network automation. The coincidence factor between load and generation will play an important role and therefore worst case scenarios are not a sufficient solution. In many situations the restrictions occurring rather rare may be preferred compared to higher costs for connection which is able to absorb also the last kilowatt hour, if they could be simply estimated in advance.

To summarize, the objectives for this work are briefly:

- To analyse the voltage issues caused by the connection of DG units to the distribution network.

- To develop and evaluate voltage control concepts in active low and medium voltage distribution networks for increasing the utilisation factor

of existing distribution networks.

- To verify the efficiency of the voltage control algorithm regarding the amount of fed-in energy and network losses with data from an existing distribution network with both wind power and photovoltaics.

- To study the impact of asynchronous data gathering and time delays for the active distribution network with voltage control in a field test.

- To develop and evaluate criteria for the dimensioning of future distribution systems with the proposed automation.

- To develop a simple method for determining the DG hosting capacity in an existing distribution network.

- To demonstrate a method for estimating the need of active power curtailment, if the nominal DG output is larger than the firm capacity of the connection point.

1.4 Contributions

The impact of connecting DG to the medium and low voltage distribution network level is studied in detail as well as requirements and limitations are identified. A model of a generic test system to evaluate the impact of DG in distribution systems is developed and applied. Some general characteristics of network voltages and losses are analysed and illustrated in examples. Simplified calculations are verified for the network voltage at the DG connection point.

A control algorithm for coordinated voltage control in distribution systems with high DG penetration is developed. The voltage control is based on varying the setpoint for the on-load tap changer at the substation transformer and controlling active and reactive power output from the DG units. Certainly algorithms for coordinated voltage control have been in the focus of research since some years ago and several have been proposed before. To en-

sure proper voltages at the network nodes the voltage at the customer side is fed back to the controller and used as input value to determine setpoints. The voltage measurements are obtained by integrating the new electricity meter infrastructure into the control system. Voltage control for energy savings based on measurement data from electricity meters has been published recently [43]. However, the combination of measured voltages from electricity meters and coordinated voltage control based on PI-controllers for determining setpoints for the AVC relay as well as active power and reactive power output from DG units is unique. Thus state estimation to obtain information about the actual network state as in [23, 34] is not needed. While the concept presented in [19] identifies critical network states and determines new states stepwise by dynamic load flows, the control algorithm developed within this work does not need information about the physical network structure and its parameters which makes it flexible and easy to integrate in networks with different topologies. The proposed control algorithm uses a PI-controller for continuously determining the setpoint of the AVC relay, which is efficient regarding the number of OLTC operations and straight forward to integrate into the existing infrastructure to control the OLTC. This can be compared to previous work, where a step model as in [24] and the corresponding case study in [26] are applied for voltage control. Situation depending voltage control modules are proposed in [25] and stepwise control for determining the OLTC position is considered in [23, 53].

The proposed control algorithm has been verified through Matlab simulations in a model of an existing distribution system with eight medium voltage feeders, around 170 MV/LV substations and the low voltage network of two MV/LV substation. To the network with a maximum load of 28 MW are 42 MW of DG connected. In addition, the network losses, which are changing due to the increased reactive power transfer and varying voltage levels in the network, are determined and compared to the losses that occur in the base case and with local control from the DG units only. Whereas many approaches treat either the medium or low voltage distribution network, the presented control algorithm has been verified for simultaneous voltage control in both parts and the differences are discussed. Moreover the control algorithm is applied for different types of DG, wind power and photovoltaics, and thus not limited to one specific type of DG. It is demonstrated that the control algorithm is able to keep the voltage within the boundaries of the voltage

quality criteria.

The concept for coordinated voltage control is implemented in a field test. A similar field test on coordinated voltage control in a Finnish distribution system has been carried out recently, but as an important difference state estimation has been used there to determine new setpoints and the control actions have been executed manually based on suggestions from the system [29]. In the field test, which is part of this work, state estimation is not needed and the control is fully automatic. Remotely readable electricity meters equipped with communication have been installed in 13 secondary substations to get the feed back of the actual network voltage to the setpoint controller. Especially to evaluate the impact from the asynchronous data transfer and the communication delay and other delays in the control chain, the field test is necessary and reveals no problems.

Criteria for the dimensioning of future distribution networks, in which DG is as natural as load, are identified. The identified criteria are analysed and discussed with regard to maximum DG capacity, the consequences for load connection and the network losses. The correlation between line utilization and network losses are analysed to confirm some dimensioning rules regarding their availability for mixed distribution networks with load and generation.

The present work goes beyond the common practice for DG connection planning and suggests connection of DG capacity when the active power absorption is not guaranteed during each time. Regarding the connection capacity recent research often has the focus on optimisation of the total network structure or cost optimisation [44, 45, 47]. Instead of using power flow calculations requiring a sufficient model of the network, in this thesis a new simple-to-apply 5-Step-Method is developed which allows the network operator to estimate the firm capacity of a connection point. As a benefit from this method detailed and time consuming network studies can be reduced significantly. Input parameters for the 5-Step-Method are the short circuit impedance of the connection point, information about the maximum voltage decrease caused by load and about the setpoint of AVC relay.

However, based on the common practice that an investor puts a request for the connection of a DG unit at a specific location to the DNO, this work con-

tributes with a feasible approach to determine the restrictions which would apply to a DG unit connected to this specific connection point depending on the voltage control method. Therefore, the 5-Step-Method is applied with probabilistic input data to determine the need for restrictions when the connected nominal DG output is larger than the certain hosting capacity of the network at the point of connection. Thus a method is presented for determining the trade off between more costly and time consuming network reinforcement and cheaper, faster to implement but restricted use of existing network connections. Again, compared to previous work, load flow calculations can be omitted when applying the 5-Step-Method [52]. Vice versa the 5-Step-Method with probabilistic input data also permits to identify the rated capacity of a DG unit for a specific connection point, if some predefined amount of active power curtailment is tolerated.

Summarized, the contributions from this work are:

- A generic test system to demonstrate and understand the impact of DG on distribution systems.

- A voltage control algorithm for coordinated voltage control in distribution systems, which increases the network utilisation and is based on information about the current network situation obtained by electricity meters and does not need state estimation. Thus it is not depending on the physical network structure.

- Verification of the control algorithm in simulations based on data from an existing network both on medium and low voltage level with different types of DG.

- Integration of the coordinated voltage control in a field test network to analyse the impact from asynchronous measurement values on the control. The implementation has been successful and turned out as expected.

- A simple-to-use 5-Step-Method to determine the maximum DG capacity at a connection point of an existing distribution network with easily available input data.

- A method for estimating curtailment of DG units with non firm connection for different voltage control strategies in a simple way and for identifying the DG capacity for some maximum amount of active power curtailment at a specific connection point.

1.5 Outline of the Thesis

Chapter 2 starts with the theoretical background regarding the impact of DG units connected to medium and low voltage distribution networks. In particular the differences between the connection at the low and medium voltage level are pointed out. The second section discusses the physical limits of DG connection and introduces firm and non firm connections. Further on, a closer look is taken at regulations and grid codes regarding the connection of DG.

In Chapter 3 various methods for voltage control in distribution systems are introduced. Automation in distribution networks is considered in detail and two common examples are presented. Finally the voltage control algorithm developed within this work is illustrated.

The verification of the control concept is presented in Chapter 4. At the beginning the network model of the existing distribution system, which is used as case study system, is illustrated. The main section is about the simulations of the voltage control and the results of the different strategies. To conclude the chapter, the results are summarized and analysed.

Chapter 5 is about the field test where the voltage control is implemented. The test system is illustrated and an overview of the used equipment is given. Afterwards the implementation of the voltage control in the field test is described and finally the data collected during the field test is evaluated and summarized.

Chapter 6 is the introduction to the second part of the thesis, which is about network planning and determining of restrictions for non firm connections. It starts with an overview of network planning and dimensioning with requirements, limiting components and dimensioning rules. Then the benefits

of network automation are compared to network reinforcement and finally requirements for distribution networks with DG are considered.

In Chapter 7 the 5-Step-Method to determine the maximum DG capacity for an existing distribution network is introduced and the result is compared to the one obtained by power flow calculations. Determining active power curtailment is an application for the calculation method that makes it possible to estimate the restrictions from connection points with lower capacity as the connected DG capacity.

DG capacity and restrictions with probabilistic input data obtained by the 5-Step-Method are presented in Chapter 8. First the 5-Step-Method is used to identify the need for restrictions when a DG unit with predefined nominal output is connected to a specific location in an existing distribution network depending on the voltage control strategy. Further on the nominal output for a given amount of active power curtailment at a specific location is determined.

Chapter 9 is dedicated to application considerations for establishing non firm DG connections. In the first part the steps to be performed by the distribution system operator are discussed and the second part considers the corresponding steps for DG developers.

The final conclusions from this thesis and an outlook on further work that could be done within this area is given in Chapter 10.

1.6 Publications

The following papers have been published in connection to this work:

I. Leisse, O. Samuelsson and J. Svensson, "Increasing DG Capacity of Existing Networks Through Reactive Power Control and Curtailment" presented at *9th Nordic Distribution and Asset Management Conference (NORDAC) 2010*, Aalborg, Denmark, 2010.

I. Leisse, O. Samuelsson and J. Svensson, "Electricity Meters for Coordinated Voltage Control in Medium Voltage Networks with Wind Power" presented at *IEEE PES Conference on Innovative Smart Grid Technologies Europe*, Göteborg, Sweden, 2010.

I. Leisse, O. Samuelsson and J. Svensson, "Case Study of Coordinated Voltage Control and Network Losses in an Existing Medium Voltage Network with Large Penetration of Wind Power" presented at *10th International Workshop on Large-Scale Integration of Wind Power into Power Systems as well as on Transmission Networks for Offshore Wind Power Plants*, Aarhus, Denmark, 2011.

I. Leisse, O. Samuelsson and J. Svensson, "Coordinated Voltage Control in Distribution Systems With DG - Control Algorithm and Case Study" presented at *CIRED2012 Workshop*, Lisbon, Portugal, 2012.

I. Leisse, O. Samuelsson and J. Svensson, "Coordinated Voltage Control in Medium and Low Voltage Distribution Networks with Wind Power and Photovoltaics" presented at *IEEE PowerTech 2013*, Grenoble, France, 2013.

A licentiate thesis has been published within this project:

I. Leiße, "Integration of Wind Power in Medium Voltage Networks - Voltage Control and Losses", 2011.

Chapter 2

Distributed Generation in Distribution Networks

This chapter focuses on the impact of distributed generation on low and medium voltage electricity distribution networks (DN). The first part of this chapter will discuss the physics. In the second section a closer look is taken on requirements and limitations for the connection of DG. Finally some examples are illustrated using a generic network model in the third section.

2.1 Physical Impact of DG

Connection of distributed generation units to distribution networks affects the network in several manners. Most obvious are the changes of active and possibly reactive power flow which have an impact on the total power flows in the network. Thus some network branches might be loaded harder and other branches might experience decreased loading. In some branches the direction of the power flows may also be reversed. As a consequence of the changed power flows there is an impact on the network voltages and network losses, which are essential quantities in distribution networks.

2.1.1 Medium Voltage Distribution Networks

Medium voltage is defined as the voltage range between 1 kV and 36 kV in [54] but also other definitions where voltages from 1 kV to less than 100 kV are referred to as medium voltage can be found [55]. Medium voltage distribution networks are usually the connection between the high voltage subtransmission networks (in Sweden 130 kV) and the low voltage network (in Sweden 0.4 kV) where most of the customers are connected. Some customers with large energy consumption may be directly connected to the medium voltage network. Typical voltages for medium voltage networks for load supply are 10 kV and 20 kV. But also other voltage levels as 40 kV, 50 kV and 70 kV are in operation. For the connection of wind farms a voltage of 30 kV has become quite common in Europe during the last years.

Medium voltage distribution networks are normally fed by one high voltage/ medium voltage substation with one or more transformers operated in parallel or one at the time. Even though the topology of medium voltage networks is typically meshed to have the possibility for backup connections, in most cases they are operated radially in normal operation to keep the operation and protection system more simple [56, 57].

For the lines in medium voltage distribution networks several different line types with various characteristics are used. The main difference is between overhead lines and underground cables which are both common in MV networks. In many networks these different types of lines are mixed as well. In the Swedish case some years ago MV distribution networks in rural areas were normally consisting of overhead lines while underground cables were more common in urban areas. Since non-isolated overhead lines are less robust for extreme weather conditions, large projects for cabling rural areas were rolled out after the storms Gudrun (2005) and Per (2007) and also in rural areas underground cables now become more and more common [58, 59]. In some areas where cabling would have been too costly non-isolated overhead lines have been replaced by isolated overhead lines. Nevertheless fault diagnostic in networks with underground cables is often more difficult and time consuming than in networks consisting of overhead lines. To demonstrate the variations between different types of lines, the parameters of some typical MV lines are shown in Table 2.1. Note the difference between over-

head lines and cables.

Table 2.1: Typical line impedance for some types of medium voltage underground cables and overhead lines. AXCEL cable has been chosen as a reference for PEX insulated aluminium cables for 12 kV rated voltage. The current-carrying capacity is valid for underground installation of the cables and a conductor temperature of 65 °C. For overhead lines the current-carrying capacity is valid for a maximum conductor temperature of 100 °C and an ambient temperature of 30 °C.

Medium voltage line type		Cross section area $[mm^2]$	Current-carrying capacity [A]	R $[\Omega/km]$	L $[mH/km]$	C $[\mu F/km]$	$\frac{X}{R}$
cable (3-phase)	AXCEL	3*50/16	145	0.641	0.38	0.16	0.19
	AXCEL	3*95/25	205	0.320	0.35	0.21	0.34
	AXCEL	3*150/25	260	0.206	0.32	0.24	0.49
	AXCEL	3*185/25	290	0.164	0.31	0.27	0.59
	AXCEL	3*240/35	340	0.125	0.30	0.29	0.75
overhead line	FeAl62	62	155	0.535	1.132	0.0061	0.66
	FeAl99	99	205	0.336	1.085	0.0061	1.01
	FeAl157	157	270	0.214	1.036	0.0061	1.52
	FeAl234	234	345	0.143	0.996	0.0061	2.19

Transferring power through lines causes voltage variations and power losses. The voltage variation and the power losses along a line are depending on the line parameters and the amount of active and reactive power which is transferred. Different models for lines are available in the literature [60]. The most common ones are the T-model and the π-model. The models differ in the location of the shunt admittance. They are shown in Figure 2.1 and 2.2 respectively. For accurate modelling of longer lines the π-model as shown in Figure 2.2 is preferred. The π-model concentrates each line section of a longer line to three components: the series impedance and the shunt admittance which is split into two parts and then located at each end of the π-model. Regarding the line losses and the voltage drop series impedance consisting of series resistance and series inductance as in (2.1) are the most important parameters. However, especially for long underground cables the line shunt admittance as

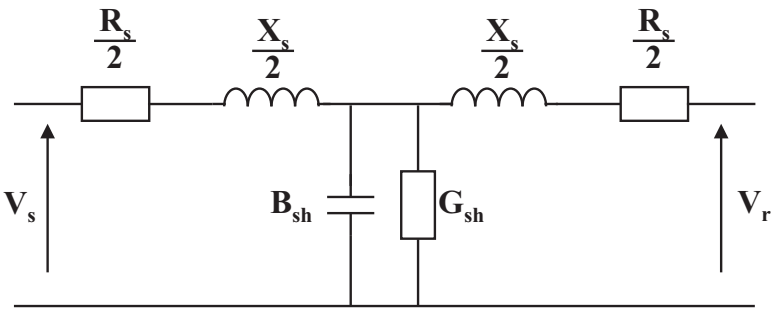

Figure 2.1: T-equivalent of a medium length line ($\approx 80-240km$) with series resistance R_s and reactance X_s as well as shunt conductance G_{sh} and susceptance B_{sh}.

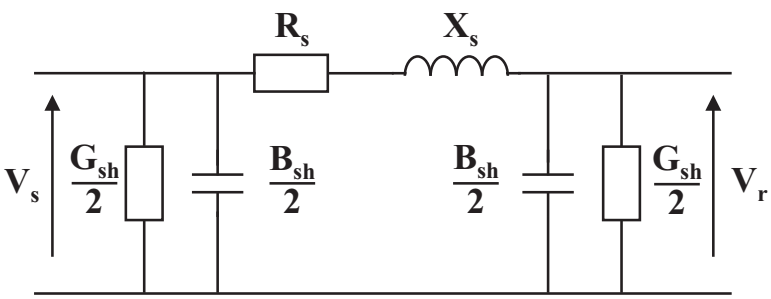

Figure 2.2: π-equivalent of a medium length line ($\approx 80-240km$) with series resistance R_s and reactance X_s as well as shunt conductance G_{sh} and susceptance B_{sh}.

in (2.2) is important as well and should not be neglected.

$$Z_{line} = Z_s = R_s + jX_s = R_s + j\omega L_s \tag{2.1}$$

$$Y_{sh} = G_{sh} + jB_{sh} = G_{sh} + j\omega C_{sh} \tag{2.2}$$

A typical parameter to describe the characteristics of a line is the ratio between its series reactance and its series resistance referred to as the X/R ratio [37, 61]. Depending on the type of the line, the X/R ratio varies between below one and over ten. In general it is larger for overhead lines than for underground cables and increases with the rated voltage of the line.

Since distribution networks are traditionally planned and built for the power supply of loads, it has been assumed that the voltage decreases from the substation along the feeders to the customers. Thus dimensioning the network for the expected voltage variation during periods of maximum load was sufficient to guarantee a proper network voltage at all network nodes, assuming that the voltage at the medium voltage busbar at the substation is chosen right. Hence, the on-load tap changer at the HV/MV substation transformer is usually the only equipment for voltage control in medium voltage distribution networks.

Distributed generation units in medium voltage networks are often in the size of a few hundred kW up to a couple of MW depending on the type of DG unit and the network structure. Typical types of DG units which are connected to the MV network are wind turbines, combined heat and power and large scale photovoltaic installations.

2.1.2 Low Voltage Distribution Networks

The low voltage distribution network is the part of the network from the last substation to the customers. Most of the customers in the residential, service and industrial sectors are connected to this part of the network. In Europe a three phase connection with a voltage of 0.4 kV is usual in these networks. Traditionally also the low voltage distribution network was planned and built for an unidirectional power flow from the substation transformer to the customers.

Only a small part of the low voltage network is still consisting of non-isolated overhead lines. The main part of the customers in the LV network is connected by underground cables or in some cases also by overhead cables hanging on poles. Due to their purpose the design of low voltage cables differs from the one for medium voltage cables and thus the line parameters are distinct as well. In Table 2.2 the parameters for some typical low voltage lines are shown.

By now low voltage distribution networks are quite passive which means that there is usually no voltage control or measurements behind the HV/MV sub-

Table 2.2: Typical line impedance for some types of underground cables and overhead lines in low voltage networks. AKKJ cable represents PVC insulated aluminium cables for 1 kV rated voltage and EKKJ represents PVC insulated copper cables for 1 kV rated voltage. The current-carrying capacity is valid for underground installation of the cables and a conductor temperature of 70 °C. For the overhead lines the Cu-types are copper lines and the FeAl-type is a aluminium conductor with an iron core. The current-carrying capacity is valid for a maximum conductor temperature of 100 °C and an ambient temperature of 30 °C.

Low voltage line type		Cross section area $[mm^2]$	Current-carrying capacity [A]	R $[\Omega/km]$	L $[mH/km]$	C $[\mu F/km]$	$\frac{X}{R}$
cable (3-phase)	AKKJ	3*50/15	250	0.641	0.24	0.50	0.12
	AKKJ	3*95/29	220	0.320	0.24	0.56	0.24
	AKKJ	3*150/41	290	0.206	0.22	0.58	0.33
	EKKJ	3*6/6	57	3.08	0.30	0.29	0.03
	EKKJ	3*10/10	77	1.83	0.29	0.32	0.05
overhead line	Cu10	10	-	1.83	1.29	0.0061	0.22
	Cu16	16	-	1.15	1.29	0.0061	0.35
	Cu25	25	-	0.73	1.29	0.0061	0.58
	FeAl62	62	155	0.535	1.13	0.0061	0.66

station. They are dimensioned to cope with maximum load and still maintaining a sufficient voltage level at the customer connection point. Transformers at the MV/LV substations are normally equipped with tap changers which are used to compensate for voltage deviations from the nominal voltage which occur depending on their location in the MV network. However, these tap changers have only some positions (e.g. ± 2 positions with a step size of 2.5 %) and have to be adjusted manually at no-load. Thus after installation and start up they are seldom used any more unless the network configuration is changed.

Small scale DG units are in general connected to low voltage distribution networks. Their size can vary from very small units with some hundreds of watts up to some hundreds of kilowatts. Typical types of DG connected to the

low voltage network are photovoltaic plants, small scale CHP and small scale wind turbines.

2.2 Requirements and Limitations for Connection of DG

From an economical perspective it is preferred to connect small distributed generation units (up to some MW) to the existing distribution network feeders. However, these networks have from the beginning only been planned and built for load supply and not for the connection of generation. Thus a unidirectional power flow and a voltage profile where the voltage decreases from the substation along the feeders is assumed when planning the network. For the network voltage this means that a voltage rise is not considered and the main part of the total available voltage band is already used to avoid undervoltage due to maximum load. When only a small amount of DG is connected to existing distribution networks, the load is probably still larger than the generation. Hence, the characteristics are not really changing as only the network loading is reduced during periods of DG generation and the DG unit can be connected according to the "fit-and-forget" strategy[2]. In this section the requirements and limitations for the connection of DG to already existing distribution networks are discussed.

2.2.1 Physical Impact of DG Connection

As soon as the number of DG units and their size increase, the power injected by the DG units is no longer negligible. In this section the physical limits are considered in detail.

[2]The "fit-and-forget" strategy characterizes the connection of DG units which are rather small compared to the load in the network. They are often treated as negative loads. Before connecting these units, it is checked that the connection is not affecting the network in a noticeable manner. After that they are not considered any more.

Voltage Limits

The network voltage is an important quality criterion especially in distribution networks where customers are connected. To ensure the proper operation of equipment connected to the grid, standards regarding the network voltage at the customer connection point have been approved.

A current through a line causes a voltage drop $\overline{\Delta V}$ between the two ends of the line. In general the voltage drop is formulated as in (2.3) which depends both on the real I_p and imaginary I_q part of the current I and the line resistance R and line reactance X of the line impedance Z.

$$\begin{aligned}\overline{\Delta V} &= \overline{IZ} \\ &= (I_p + jI_q)(R + jX) \\ &= RI_p + jRI_q + jXI_p - XI_q \\ &= (RI_p - XI_q) + j(RI_q + XI_p)\end{aligned} \tag{2.3}$$

Thus both the real part ΔV_p as in (2.4a) and the imaginary part ΔV_q as in (2.4b) of the voltage drop are contributing to the total voltage drop over the line in (2.5).

$$\Delta V_p = RI_p - XI_q \tag{2.4a}$$

$$\Delta V_q = RI_q + XI_p \tag{2.4b}$$

$$\overline{\Delta V} = \Delta V_p + j\Delta V_q = \sqrt{\Delta V_p^2 + \Delta V_q^2}\; e^{j\,arctan\left(\frac{\Delta V_q}{\Delta V_p}\right)} \tag{2.5}$$

Often the current through a line is not given but it is determined by the power that is transferred. To convert the power to current the voltage at the receiving end V_r is used as reference. Hence, active and reactive currents are determined as depicted in (2.6).

$$\overline{I} = \frac{\overline{S}^*}{\overline{V_r}} = \frac{P - jQ}{\overline{V_r}} = I_p - jI_q \tag{2.6}$$

So, the voltage drop depending on the current as in (2.3) could be reformulated to a voltage drop, which depends on apparent power and the voltage at

the receiving end as in (2.7).

$$\begin{aligned}\overline{\Delta V} &= \overline{IZ} = \frac{\overline{S}^*}{\overline{V_r}}\overline{Z} \\ &= \frac{1}{\overline{V_r}}\left[(RP+XQ)+j(XP-RQ)\right]\end{aligned} \tag{2.7}$$

In high voltage transmission networks, where often $X/R > 10$, the line resistance R is neglected and the voltage variations assumed to be depending only on the reactive power transfer [60–62]. As mentioned in section 2.1.1 and 2.1.2 the line resistance in medium and low voltage distribution networks, with an X/R-ration around 1 or even less, can not be neglected. Therefore active power flows will affect the voltage as shown in (2.7) and also active power injection causes a voltage drop.

Effectively active power flows affect the voltage in medium and low voltage distribution networks. Thus the infeed of the active power from DG units connected to distribution networks increases the voltage at the connection point and along the whole feeder, where the DG unit is connected. This voltage rise can become an issue especially in situations when the active power generation by DG units exceeds the active power consumption by the loads and the voltage increases above the chosen setpoint at the substation where the highest voltage is assumed. Due to the dimensioning of distribution networks, where the highest voltage is assumed at the substation and the largest part of the available voltage band is dedicated to avoiding undervoltage, there is normally only a narrow part of the total voltage band available for avoiding overvoltage at the DG connection point.

Current Limits

The thermal line limits are limiting the amount of DG power that can be fed into an existing network. Under normal operation the power flow in a traditional distribution network is from the substation along the feeders to the loads at the customers. When some DG power is connected to the DN the power from the DG unit will decrease the power flow in the network

and thus the line loading decreases as well. Not before the power injected by DG units exceeds the actual power consumption the power flow is reversed. With a large amount of DG capacity installed and especially in situations with low load the reversed power flow can even exceed the power flow during maximum load as in (2.8). When this level of DG penetration is reached, thermal line limits can become an issue.

$$|S_{gen,max} - S_{load,min}| > |S_{load,max}| \tag{2.8}$$

The thermal line limits are depending on the maximum line temperature that can be tolerated. For cables this temperature is mainly depending on heat constraints for the insulation material. Typical values for the long term conductor temperature are 70 °C for cables with PVC insulation which are common for voltages below 1 kV and up to 90 °C for PEX insulated cables which are common for voltages above 1 kV [63]. In the case of overhead lines the sag of the line is a limiting factor.

Network Losses

In distribution networks losses are an important issue since the lost energy has to be paid and network components are heated up by losses which may reduce their lifetime. Furthermore energy for active power losses has a value and has to be generated as well. Thus losses should be kept as low as possible. Network losses can be divided in two categories: series losses and shunt losses. While series losses are directly depending on the current through the components (i.e. the transferred power), shunt losses are depending on the voltage. Shunt losses are calculated according to (2.9a) and (2.9b). As they mainly occur in transformers and reactors and are not directly depending on the changes in the power flow caused by DG units, they are not considered here.

$$P_{loss,sh} = V^2 G_{sh} \tag{2.9a}$$

$$Q_{loss,sh} = V^2 B_{sh} \tag{2.9b}$$

The series losses for a three phase line are determined according to (2.10a) and (2.10b). Thus network losses are depending on the current through the

line which is proportional to the active and reactive power transferred.

$$P_{loss,s} = 3I^2R = \left[\frac{P}{V}\right]^2 R + \left[\frac{Q}{V}\right]^2 R \tag{2.10a}$$

$$Q_{loss,s} = 3I^2X = \left[\frac{P}{V}\right]^2 X + \left[\frac{Q}{V}\right]^2 X \tag{2.10b}$$

Reactive losses Q_{loss} may change the reactive power flow and therefore affect also the active losses in some manner. However, there is no direct value for reactive power losses and they are not treated in this work.

2.2.2 Firm versus Non Firm Capacity

Amongst others the restrictions from the previous section have to be considered to allow the connection of DG units with a specific capacity to a specific point of connection. While some of the conditions are static and do not significantly vary during time other conditions in the network are more time depending.

Similarly some of the limits are fixed others are more variable. The minimum and maximum voltage limits are typically fixed and the network voltage should always be within these limits. However, the actual voltage in the distribution network is fluctuating depending on the load and the voltage in the feeding network. Thus the voltage span that is available for increasing voltage by injection of active power from a DG unit may vary. Although the maximum capacity due to thermal line limits is quite constant over the year, this is different for overhead lines which are more exposed to air temperature and wind. Hence, the capacity of a line may vary over time. Connected loads are definitely changing and therefore the capacity in a line that is available for injection of power from DG units is changing as well.

Regarding network losses the situation is even more difficult. From an economical perspective the time integral of network losses is more important than their instantaneous value. Thus losses may also be considered when deciding about how to connect DG units to the distribution network.

By existing connection procedures for DG it is typically assumed by the DNO but also by the DG developer that the point of connection should accept active power according to the nominal output of the DG unit at any time without exceeding any of the mentioned limits. As the case may be with the exception for operation during abnormal connection. Of course there are benefits from this approach: It is straightforward to determine, no control of the DG unit is needed and also the contract for the connection is simple. However, some of the operating conditions may occur rather seldom and ensuring access to the rated DG capacity under all rare conditions at each time may be quite expensive compared to the case in which some production limitations could be accepted during some periods. The amount of power which can be fed into a connection point at each time (and without any other measures from the DG side) is called firm capacity.

On the contrary, if the rated power of the DG units is larger than the capacity at the connection point that is ensured at any time, it is referred to as non firm capacity. Some restrictions for the DG units will occur under limited periods if they are connected non firm. A typical example would be the limitation of the infeed capacity due to voltage limitations but also other reasons as e.g. line congestion are possible. To guarantee the proper operation of the network in case of non firm connection, it has to be ensured that the DG units limit their impact on the network (e.g. the voltage rise) according to the restrictions. Either fixed time schemes or a continuous control can be applied to follow the varying infeed capacity. While a time scheme is more simple, it relies still on worst case scenarios and thus it has probably to be more strict than a continuous control which takes the current network situation into account.

2.2.3 Regulations and Grid Codes

For the grid connection of distributed generation several regulations and standards have to be taken into account. Protection systems and fault ride through requirements are not in the focus of this work and are therefore not discussed here either. In this section a short overview of some regulations, that are applied regarding the long term voltage variations, is given. The focus here is on the European perspective in general and the Swedish situation more in detail.

EN 50160 is the European standard for the voltage at the customers connection point [12]. For long term voltage variations the voltage has to be within $\pm 10\,\%$ of the nominal voltage during 95 % of all 10 minute mean RMS values of one week according to the standard.

While this standard is quite generous there might be other and more strict regulations on national level. In Sweden for example the voltage at the customer connection point is regulated by a publication from the Swedish Energy Markets Inspectorate (Energimarknadsinspektionen) [13]. According to this directive *all* 10 minute mean RMS values have to be between 90 % and 110 % of the nominal voltage.

For the connection of DG to distribution networks in Sweden there is an industry recommendation for the connection of small scale generation[3][64]. This document which should be applied for generation units up to 1.5 MW recommends that the voltage variation caused by DG units should not exceed 2.5 % at the point of connection, already including the dead band for voltage control at the substation. The recommendation was developed for wind power when it was a marginal phenomenon, but is still being used.

For the DG connection in Germany there are different limits for the voltage rise introduced by DG units in the low and medium voltage network. In the low voltage network the voltage change caused by the infeed from distributed generation should not exceed 3 % according to a draft of the application guide VDE-AR-N 4105 [40]. On the medium voltage level the voltage rise introduced by all connected DG units should not be more than 2 % [65].

2.3 Generic Network Model

In this section a model of a generic distribution network is shown and some of the phenomena described in previous sections of this chapter are illustrated.

[3] In Swedish: "AMP - Anslutning av mindre produktionsanläggningar till elnätet".

2.3.1 Network Structure

Figure 2.3 shows a generic distribution network. The network is fed by one substation with a 130/10 kV transformer. The three medium voltage feeders are of the typical types: a pure load feeder at the top, a pure generation feeder in the middle and a mixed feeder with load and generation at the bottom. The per unit values for the system are set to $V_{base} = 10\,\text{kV}$ and $S_{base} = 1\,\text{MVA}$. Thus the base impedance Z_{base} is determined according to (2.11).

$$Z_{base} = \frac{V_{base}^2}{S_{base}} = \frac{(10^4)^2}{10^6} = 100\,\Omega \tag{2.11}$$

The substation transformer has a rated capacity of 10 MVA and is equipped

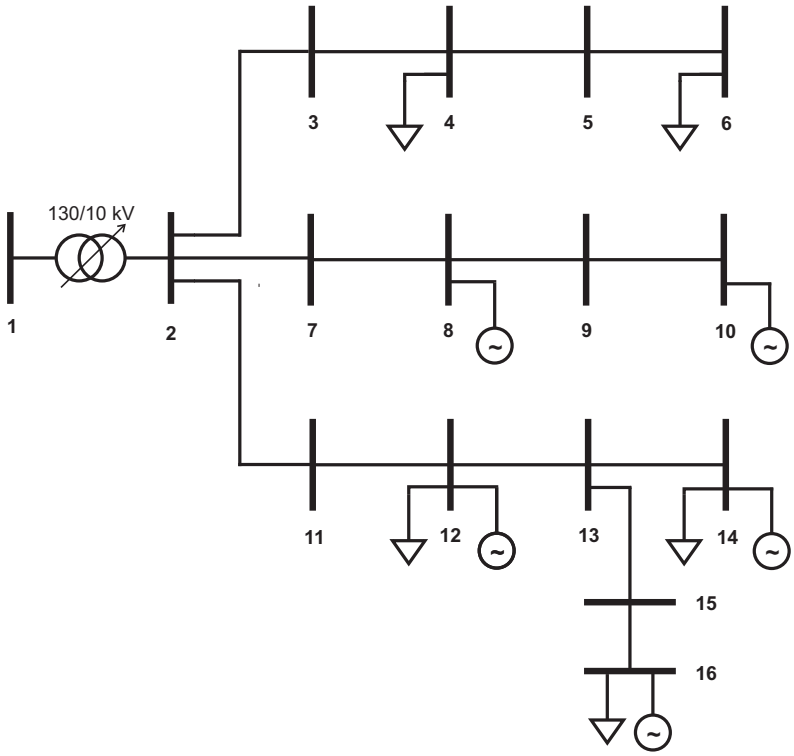

Figure 2.3: Schematic of a generic medium voltage distribution with the three typical feeder types.

with an on-load tap changer (OLTC), that has ±9 steps with a step size of 0.0167 pu (1.67 %). Thus the voltage at the MV side of the substation (node 2) can roughly vary between 0.85 pu and 1.15 pu when the voltage at the high voltage side (node 1) is assumed to be 1.0 pu. Assuming a short circuit voltage of 10 %, the transformer impedance is calculated according to (2.12) [62].

$$Z_{tr,SI} = \frac{V_{\%,SC} V_{tr,nom}^2}{S_{tr,nom}} = \frac{0.1 \cdot (10^4)^2}{10 \cdot 10^6} = 1\,\Omega \tag{2.12}$$

The transformer in the generic model thus has an impedance of $Z_{tr,SI} = 1\,\Omega$ or $Z_{tr,pu} = 0.01$ pu.

Each of the line sections between node 2 and node 16 has the same length and the same type of cable. In the generic network the line length between two nodes is 2 km and AXCEL 3*95/25 is used as cable. Thus the series impedance is $Z_{SI} = (0.640 + \mathrm{j}0.220)\,\Omega$ or $Z_{pu} = (0.0064 + \mathrm{j}0.0022)$ pu for each line section.

Loads can have different characteristics in their behaviour regarding voltage variations. In practice the power consumption of loads is often depending on the voltage to some extent but especially modern equipment with power electronics is often of constant power type [61, 66]. In the generic network all loads are constant power loads which means that their power consumption is constant and not depending on the network voltage. Thus a decreasing network voltage will increase the load current. For the loads in the test system the power factor is assumed to be $cos\varphi = 0.95(ind)$. Hence, for each MW active power that is consumed by the loads additional reactive power according to (2.13) is consumed.

$$Q_{load} = \frac{P}{tan\varphi} = \frac{1}{tan(acos\varphi)} = 0.329\,\mathrm{Mvar} \tag{2.13}$$

The DG units that are connected to the generic network are modelled to be connected by full-power converters. As all available DG units typically try to feed-in the maximum available power, they behave as constant power sources.

Important figures to describe the strength of network nodes in a distribution network are the short circuit impedances Z_{SC}. The short circuit impedance in

Table 2.3: Short circuit impedances Z_{SC} of the nodes in the generic network without considering the impedance in the overlying transmission network.

Network node number	$Z_{SC,SI}[\Omega]$	$Z_{SC,pu}[pu]$
1	-	-
2	j1.0	j0.01
3,7,11	0.64 + j1.22	0.0064 + j0.0122
4,8,12	1.28 + j1.44	0.0128 + j0.0144
5,9,13	1.92 + j1.66	0.0192 + j0.0166
6,10,14,15	2.56 + j1.88	0.0256 + j0.0188
16	3.20 + j2.10	0.0320 + j0.0210

each node of the generic network is the sum of the impedance in the overlying transmission network, the transformer impedance and the line impedance of the medium voltage lines. The impedance of the overlying network is normally neglected and thus only the HV/MV transformer and the MV lines matter. Table 2.3 shows the short circuit impedances of the network nodes in the generic network. As illustrated in Table 2.3 contributes the transformer reactance with a considerable part to the total reactance of the short circuit impedances. For the nodes close to the transformer the X/R ratio is about two. However, for the nodes further away from the substation the line resistance is dominating and the X/R ratio decreases to less than one.

According to Table 2.1 the line capacity in the generic network is $I_{max} = 205\,\text{A}$ for a conductor temperature of $65\,^{\circ}\text{C}$. Thus the maximum apparent power S_{max} that is allowed to be transferred through each line section at nominal voltage is calculated according to (2.14).

$$S_{max} = 3\frac{V_{nom}}{\sqrt{3}}I_{max} = \sqrt{3}\cdot 10^4 \cdot 205 = 3.55\text{MVA} \tag{2.14}$$

Thus it is possible to transfer up to 3.5 MVA through the network lines in continuous operation. Still assuming a power factor of $cos\varphi = 0.95(ind)$ for the loads, the maximum load per feeder is $P = 3.37\,\text{MW}$ and $Q = 1.11\,\text{Mvar}$.

During short time periods higher values are acceptable since the insulation of the used cable type tolerates higher temperature than 65 °C during limited time periods.

2.3.2 Voltage Variations

To determine the voltage variation at a network node depending on active and reactive power consumption and injection, voltage sensitivity factors can be introduced [62]. For the calculation of the voltage variation according to (2.5), from (2.15) the sensitivity factors are obtained as in (2.16), where $\frac{\partial V}{\partial P}$ is the sensitivity factor for the change of active power and $\frac{\partial V}{\partial Q}$ is the corresponding factor for the change in reactive power. These sensitivity factors are individual for each network node.

$$V_s^2 = \left(V_r + \frac{RP + XQ}{V_r}\right)^2 + \left(\frac{XP - RQ}{V_r}\right)^2 \tag{2.15}$$

$$dV = \frac{\partial V}{\partial P} dP + \frac{\partial V}{\partial Q} dQ \tag{2.16}$$

In case of constant power loads the voltage sensitivity factor is changing with the network voltage as higher voltage reduces the current through the line.

For unknown network impedances the sensitivity factors can be determined experimentally by changing the active and reactive power injection at a node according to (2.17) as shown for reactive power in [62].

$$\frac{\Delta V}{\Delta P} = \frac{V_{before} - V_{after}}{P_{before} - P_{after}} \text{ and } \frac{\Delta V}{\Delta Q} = \frac{V_{before} - V_{after}}{Q_{before} - Q_{after}} \tag{2.17}$$

If the short circuit impedances are known, it is also possible to determine the voltage sensitivity for each network node. Neglecting the rest of the network and only considering the desired node, a Thévenin equivalent of the corresponding part of the network looks like in Figure 2.4.

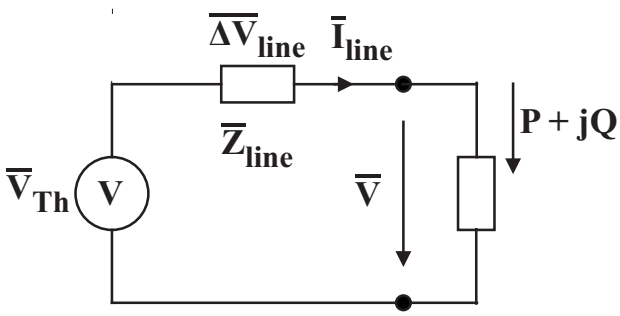

Figure 2.4: Schematic of a Thévenin equivalent to illustrate the voltage at a predefined network node.

From (2.19) the voltage at the requested node is obtained.

$$V_{Th}^2 = (V + \Delta V_p)^2 + \Delta V_q^2 \tag{2.18}$$

assuming that $\Delta V_q << V + \Delta V_p$

$$V_{Th}^2 = (V + \Delta V_p)^2$$

$$V_{Th}^2 = \left(V + \frac{RP + XQ}{V}\right)^2$$

thus

$$V = \frac{V_{Th}}{2} \pm \sqrt{\frac{V_{Th}^2}{4} - (RP + PQ)} \tag{2.19}$$

In (2.20) the sensitivity factor is obtained by differentiating the equation for

voltage at the requested node in (2.19).

$$\begin{aligned}
\frac{\partial V}{\partial P} &= \frac{\partial}{\partial P}\left[\frac{V_{Th}}{2} \pm \sqrt{\frac{V_{Th}^2}{4} - (RP+PQ)}\right] \\
&= \pm\frac{1}{2}\frac{-R}{\sqrt{\frac{V_{Th}^2}{4} - (RP+XQ)}} \\
&\text{assuming only a small voltage change} \\
&\approx \pm\frac{-R}{\sqrt{\frac{V_{Th}^2}{4}}} \\
&\text{choosing the positive solution} \\
&\approx \frac{R}{V_{Th}} \qquad (2.20a)
\end{aligned}$$

By repeating the corresponding steps for Q also the sensitivity for reactive power is obtained:

$$\frac{\partial V}{\partial Q} \approx \frac{X}{V_{Th}} \qquad (2.20b)$$

If the voltage at the substation (i.e. V_{Th}) is assumed to be close to 1 pu, the sensitivity factors for active and reactive power are equal to the short circuit resistance and reactance respectively.

Thus the voltage sensitivity factor at the nodes closest to the transformer (nodes 3,7,11) are $\frac{\partial V}{\partial P} = 0.0064\,\text{pu}$ and $\frac{\partial V}{\partial Q} = 0.0122\,\text{pu}$ and for the nodes which are further away from the substation (nodes 6, 10, 14) they are $\frac{\partial V}{\partial P} = 0.0256\,\text{pu}$ and $\frac{\partial V}{\partial Q} = 0.0188\,\text{pu}$.

When a load smaller than the maximum line loading, such as 2.5 MW and 0.82 Mvar, i.e. 2.63 MVA, is connected to one of the most distant network nodes, the voltage decreases by approximately 7.9 %. If a desired minimum voltage of 0.95 pu is presumed, the voltage at the substation has to be around 1.03 pu to fulfil the voltage requirements at the load node. This will probably result in a tap changer position, which with a step size of 0.0167 pu is two steps higher than the medium position, and thus a voltage of 1.033 pu. Based

on this tap changer position, only 0.017 pu are available for the voltage rise from DG units for separated load and generation feeders. If DG units are demanded to operate at unity power factor only about 0.66 MW ($= \frac{0.017}{0.0256}$) could be connected at the distant nodes (node 6, node 10 and node 14). Permitting reactive power consumption with a power factor of $cos\varphi = 0.89(ind)$, the DG capacity could be increased to 1.06 MW. Thus the increase of DG capacity is about 60 % by allowing reactive power consumption compared to the unity power factor policy.

Assuming that the load is less than the maximum in the previous case and therefore a lower voltage variation can be expected, the setpoint for the OLTC may be lower. If for example only one step above the medium position is needed (i.e. the maximum voltage decrease is around 6.5 %), the voltage band available for voltage rises from DG increases to 3.4 %. Thus twice as much voltage band can be allocated for the DG units. In this case a DG capacity of 1.33 MW can be connected at unity power factor without violating the upper voltage limit. Consequently the available DG capacity is doubled, compared to the higher OLTC position. If the consumption of reactive power up to a power factor $cos\varphi = 0.89(ind)$ is possible, the DG capacity increases even to 2.13 MW. Again the DG capacity in MW increases with roughly 60 % by accepting reactive power consumption.

To summarize it should be concluded that the position of the OLTC is very important for the amount of DG that can be connected to an existing distribution system. Already with a step size of 1.67 % only one step makes a big difference in the available DG capacity since the available span to the upper voltage limit is normally small for distribution systems only planned for load supply. The consumption of reactive power allows to increase the DG capacity considerably. In the shown case the increase is about 60 %. The considered cases are based on the assumption that load and generation are separated (i.e. connected to different feeders). If connection to the same feeder is accepted, the situation will be improved and the DG capacity will be higher in many cases since the active power flow from the substation to the load and the one from the DG units to the substation will cancel each other.

2.3.3 Network Losses

The network losses in the generic network are depending on the active and reactive power transfer. As discussed in section 2.2.1 there are active and reactive power losses. However, only the active losses are considered here.

To continue with the thoughts from section 2.3.2 the impact of the power flow on the losses will be illustrated. Connecting a load of 2.5 MW and 0.82 Mvar at one of the most distant nodes is assumed to result in a node voltage of 0.95 pu. The series line losses can then be calculated according to (2.10a) which results 0.19 MW in this case. At a higher node voltage of 1.0 pu the losses decrease to 0.17 MW. Having a DG unit with 0.66 MW at unity power factor connected to another feeder will increase the losses with 0.010 MW. With power factor $cos\varphi = 0.89(ind)$ the losses increase to 0.012 MW under the condition that the DG unit operates at the maximum voltage of 1.05 pu. If the DG nominal output is increased to 1.33 MW, for the DG unit the losses would increase to 0.041 MW and 0.049 MW with unity power factor and $cos\varphi = 0.89(ind)$ respectively. In the illustrated examples the losses from the transferred DG power are increasing from 3.1 % to 3.7 % when reactive power is consumed by the DG unit with 1.33 MW. As the losses are increasing by reactive power consumption, the reactive power transfer should be limited to the essential amount. Applying a variable power factor for the DG units, is a reasonable method to achieve this.

If the DG unit is connected to the same node as the load the situation becomes completely different. The total power flow is reduced, since the power flow caused by the load and the one induced by the DG unit are cancelling each other. Compared to the previous example the node voltage is 0.97 pu and the total losses decrease to 0.054 MW which corresponds to loss reduction of nearly 77 %. Notwithstanding, the shown example is an extreme case and is only valid during short periods, the importance of the type of DG connection is illustrated.

Another important conclusion from sections 2.3.2 and 2.3.3 is that combining load and generation into the same feeders is beneficial from voltage and loss perspective. The voltage profile along the feeder will be flatter and the network losses will decrease according to the lower power transfer.

2.4 Summary

In this chapter the impact of distributed generation on low and medium voltage electricity distribution networks has been discussed. At the beginning the differences between low and medium voltage distribution networks have been pointed out and the impact of DG on distribution networks at the corresponding voltage level has been introduced. Further on, the requirements but also the limitations for the connection of DG to distribution networks have been considered and the connection with firm versus non firm capacity has been discussed. Regulations and grid codes for the connection of DG have been shown for the Swedish case and also some mentioned for some other countries.

Finally a model of a typical medium voltage distribution system has been developed. The model includes the three typical feeder types, which are common in medium voltage distribution networks, and is based on real cable data. Voltage variations and network losses occurring in relation to the connection of DG are introduced and illustrated in simple examples.

Chapter 3

Control Methods

In distribution systems the network voltage is one of the key values for a reliable power supply. This chapter introduces the various possibilities of voltage control in medium and low voltage distribution networks. The first section is about the existing methods which physically influence the network voltage. In the second section some examples for automation in distribution systems are given and finally in the third section the scheme for voltage control in active distribution networks developed in this work is described.

3.1 Voltage Control Alternatives

Since the network voltage at the customer point of connection is an important quality criterion, methods for voltage control in distribution systems are needed. The voltage control can be performed by physical equipment or by changing the flow of active and/or reactive power.

Four methods for voltage control in distribution systems will be introduced and discussed in this section. While on-load tap changers and control of reactive power are quite common and widespread, active power curtailment and load control are still more seldom used.

3.1.1 On-load Tap Changer

A tap changer is a physical device for voltage control which is integrated in transformers. The voltage is varied by varying the ratio between the primary side windings and secondary side windings. Often a switch is located at the transformers primary side to change between the number of turns of the primary side winding. Tap changers that perform switching between different positions without power interruptions are called on-load tap changers. On-load tap changers are well-proved devices which have been used mainly in substation transformers for many years.

Since the on-load tap changer varies the turns ratio of the transformer, a wide voltage range can be covered and thus large voltage changes are possible. The change between the number of turns is carried out by a mechanical switch which means that the transformer ratio is changed stepwise. As the number of steps is limited by the available space and costs, a compromise between the step size and the range of the ratio has to be found.

A drawback of the mechanical device is its limited speed and the mechanical wearing of the tap changer contacts. An on-load tap changer is rather slow and each operation causes deterioration. Thus the number of tap changer operations has to be limited in some manner.

As an example a typical on-load tap changer at HV/MV transformer may have ± 9 steps with a step size of 1.67 %. Thus the maximum voltage change is ± 15 %. On-load tap changers are quite common in HV/MV substations (e.g from 130 kV to 10 kV).

On-load tap changers at HV/MV transformers are often automatically controlled by an automatic voltage control relay that determines the tap changer position according to the chosen parameters [4, 5]. In many applications the AVC relay is configured to control the tap changer position keeping the voltage at the secondary side busbar constant [7]. Different setpoints depending on time and season are feasible. Another possible configuration of the AVC is line drop compensation in which the tap changer position is depending on the actual load in the network.

3.1.2 Reactive Power

In transmission networks reactive power transfer is the main means for voltage control. Switched capacitors and reactors as well as electronic devices such as STATCOM are used to control the reactive power flow and thus maintain the network voltage. Due to large X/R-ratios in transmission networks, reactive power is quite efficient for voltage control. But also in distribution networks capacitors and reactors, often located at the HV/MV substations, are used for reactive power compensation and voltage control. On the distribution level the devices are switched on and off to maintain the voltage often timer controlled on a diurnal or seasonal basis.

Beside the traditional devices as capacitors and reactors there may be other equipment in the distribution network which is able to control its reactive power output. Apart from devices dedicated for reactive power control as STATCOMs and similar devices, distributed generators, which are connected by full-scale power electronic converters, are in many cases controllable reactive power sources. By now the reactive power capability of these units is rarely used for voltage control and often unity power factor operation is favoured, but this is going to change and reactive power control from DG will become more common in the future. Especially in the case of high network voltage due to active power injection by DG units their reactive power capability can help limiting the network voltage.

If DG units are equipped with reactive power capabilities, the reactive power is available at low cost. Since reactive power transfer causes network losses and network operators for this reason often try to minimize the reactive power exchange through the substation transformers, there is a limitation for excessive use of reactive power for voltage control.

3.1.3 Active Power Curtailment

DG units are normally operated at their actual maximum active power output independent from the actual network situation. As their active power injection, due to the low X/R-ratio, induces a voltage rise at the point of con-

nection, the limitation of the infeed of active power would limit the voltage rise. This kind of voltage control is costly since reducing the fed-in from DG units means spilling a part of the available energy as power from intermittent sources as wind power and PV generators can not be shifted without storage.

Nevertheless active power curtailment may be an acceptable manner for voltage control in presence of DG. In those cases the use of curtailment must be rare which means that it should be used during short time periods and only for a small amount of the available energy. When network extensions or rebuilding can be postponed and thus the connection costs be reduced or the connection of DG units can become faster by this, active power curtailment can be cost-effective for the operator of the DG unit as well.

3.1.4 Load Control

Load control, also referred to as demand side control, is another method for voltage control in distribution networks by shifting active power flows. For this control method only loads which can be shifted without reducing the comfort for the user are considered. Typically these kind of loads are connected to some kind of storage or slow systems. Some examples for such loads are heating, cooling and the (future) charging of electrical vehicles.

In theory both a reduction and an increase of the active power consumption could be considered for such kinds of load. Thereby up and down regulation of the voltage is possible.

As a drawback the use for voltage control from demand side needs a complex coordination and control between the network and the different loads.

3.2 Automation in Distribution Networks

Transmission networks are automated and remotely controllable to a large extent. The substations have been equipped with communication for many years and almost all switching is done remotely from the control center.

In distribution networks the situation is different to the one at transmission level. In contrast to the transmission network, the number of substations is much higher and the number of customers serviced by each substation is less. At the same time the behaviour of the distribution networks is quite well predictable as long as only load is connected to them. And in addition the network has to be dimensioned to cope with the worst case scenario of maximum load anyhow. All these aspects make it less important to have expensive communication within the distribution network. Thus distribution networks are often quite passive networks.

By now communication and some measurement data is usually available from the HV/MV substations. Also remote control of switches, capacitors and on-load tap changer operations is quite common in these substations. But farther out in the distribution network, that means along the MV feeders and in the low voltage part, there is often no measurement equipment and communication. Switching operations in this part of the network are quite rare and if necessary they are often done manually by operators in the field. For several reasons this will probably change in the future:

1. More generation is connected to the distribution network and the assumption of unidirectional power flow under all operation conditions is no longer valid.

2. A large amount of the connected generation is from intermittent energy sources as sun and wind. Thus the behaviour of the generation units and the whole distribution network is less predictable.

3. Communication has become more available and data transfer is now much cheaper than some years ago.

But already today automation devices are in the distribution system to some extent. The following sections take a closer look at two common types of devices in distribution systems and their impact on the degree of automation in the DN.

3.2.1 Automatic Voltage Control Relay

The HV/MV substation is normally the closest point to the customer where the network voltage is controlled actively. As described in section 3.1.1 the voltage in the HV/MV substation is altered by an on-load tap changer which is controlled by the automatic voltage control relay. The AVC relay is also taking care of the coordination in case of master and slave operation in substations with parallel HV/MV transformers.

In the most simple configuration mode the AVC relay uses a constant voltage policy which tries to keep the voltage at the secondary side, i.e. at the medium voltage busbar, constant. Since the OLTC can alter the voltage only stepwise, a dead band for the busbar voltage is needed to avoid up and down switching. As there are other OLTCs at higher voltage levels as well, which are in cascade to the OLTC in the HV/MV substation, a time delay is also introduced to determine the order of operation for the tap changers and to avoid tap changer operations for short time voltage variations [67].

In more complex configurations the setpoint for the MV busbar voltage may vary depending on the time and season to compensate for lower voltages during periods of high network load. In the case of line drop compensation, which is another common control policy, the setpoint is also depending on the actual loading of the transformer. Thus, by including the line impedance, it is possible to control the voltage at another network node as the one, where the voltage is measured. As a result only a fraction of the total voltage variation is seen at the feeder end but the voltage variation at the substation is larger. Nevertheless the setpoint of the AVC relay is normally not correlated to the real network situation or to the actual voltage at the customer side but configured with constant settings.

In common distribution networks where solely or mainly load is connected

the setpoint of the AVC relay is normally chosen to be higher than the nominal voltage of 1 pu as the medium voltage busbar is the node with the highest voltage in such networks. It is assumed that the voltage is decreasing along the medium and low voltage network towards the customer point of connection. Thus a voltage above the nominal voltage is beneficial for the utilization of the available voltage band and probably reducing the network losses.

3.2.2 Electricity Meters

During recent years in many countries the common mechanical electricity meters working according to the Ferraris principle have been replaced by new electronic electricity meters. Since these electronic electricity meters (EM) are based on microprocessor technology and calculate the energy from the power consumption over time, they do not only measure energy but other measurement values as network voltage are also available.

In the Swedish case due to legal regulation, which require monthly meter reading from all customers, nearly all Ferraris electricity meters have been exchanged and replaced by electronic ones. These meters are provided with communication to transfer their monthly measurement reading to the utility.

The communication to the electricity meters is based on different technologies. In some cases wired technologies as Ethernet or Power Line Communication are used. Other meters are connected by wireless technologies as GPRS and ZigBee.

Today the electricity meters are mainly used for energy metering and billing but some projects for extended use of the meter functionalities are already started. In some areas the meters are used to record under and over voltage alarms which then are analysed afterwards. In a future distribution system the electricity meter may play a key role. Besides providing real time data over the electricity use also the exchange of control signals for load control may become an application. Real time network data provided by the electricity meters can be used to obtain a more detailed overview over the actual network situation. For example the network voltage at the customer side, where

it is most important, can be monitored and used for the control of active distribution networks. This is heavily exploited in this thesis.

3.3 Active Distribution Networks

When generation units are connected to the distribution network, the power flow may be reversed under periods where the generated power is larger than the actual power consumption. Therefore the assumption of decreasing voltages from the HV/MV substation along the feeders and in the low voltage network is no longer valid under all conditions. Thus it becomes much harder to predict or estimate the network voltage at the customer point of connection. Voltage increases, which may occur during some time, may be a limiting factor for the connection of DG as described in Chapter 2.

Active distribution networks (ADN) are often mentioned as a key for the integration of distributed generation to acceptable network connection costs. In this work different control strategies for active voltage control in distribution networks have been developed and tested. The goal is to increase the hosting capacity for distributed generation in existing distribution networks by using active voltage control.

The active voltage control developed in this work is developed for medium and low voltage networks with a high penetration of DG from intermittent sources as wind power and PV. It is assumed that the units are connected by full-scale power electronic converters and thus have the feasibility to provide controllable reactive power output. However, parts of the control can be used without reactive power capabilities from the DG units but in that case the benefits are limited.

3.3.1 Local Control

The local voltage control proposed in this thesis is based on the local control of the on-load tap changer as it is used widespread and extended with a local

control for the DG units. Voltage control from the DG units is obtained by managing their reactive power consumption and if necessary also the active power output.

AVC Controller for Local Control

With local voltage control the AVC relay is configured to keep the voltage at the substation constant. In this case the voltage setpoint at the substation has to be chosen to tackle the worst case of maximum load and no generation, which gives the largest possible voltage decrease between the substation and the loads. Under normal network dimensioning conditions the setpoint for the voltage in the AVC relay will be above 1 pu to utilize the available voltage band efficient. The high voltage level at the substation is normally not beneficial for the connection of DG units since only a small part of the total voltage band is available for the voltage rise introduced by DG units. The main part is always allocated to the voltage decrease even though it is only needed during some short time periods. Notwithstanding this effect is reduced to low load periods when active DG control is used, it is not the optimal control policy when DG is connected.

The benefits from voltage control by the on-load tap changer are the wide range, in which the voltage can vary, and that there are no additional losses from the on-load tap changer. But due to the stepwise operation of the on-load tap changer, the desired voltage can not always be tuned exactly. Voltage control at the substation level impacts all feeders and nodes in the underlying distribution network. Therefore a flat voltage profile along all feeders connected to the same substation is desired. Especially for substations supplying feeders with different voltage profiles, mainly load and mainly generation feeders, a common voltage control causes problems.

DG Controller for Local Control

Each DG unit has its own local control for active and reactive power control depending on the actual voltage and the voltage setpoint. Distributed genera-

tion units in the network are assumed to be able to deliver or absorb reactive power with power factor 0.89 ($cos\varphi = 0.89$) which corresponds to around half their rated active power capacity ($0.5P_{rated}$). The available reactive power is assumed to be independent of the active power output. The algorithm in this work is limited to the use for reactive power consumption (i.e. voltage reduction) from the DG units. Hence, supporting the network voltage in high load situations and during low voltage conditions is out of the focus. This limitation has been chosen for the simple reason that the network operator should not be depending on units which are not under its control[4]. Furthermore, if this limitation should be omitted, network reliability will certainly not increase if more components are involved to secure a proper load supply.

Voltage control by reactive power offers a smooth voltage control but it has to be considered that the line loading and thus also the network losses may increase. Eventually the voltage control by reactive power is limited by the DG unit reactive power capability and the line loading or network losses.

The DG control primarily activates reactive power consumption to limit the voltage at the point of connection. Is that not sufficient despite using the maximum reactive power capability, secondarily active power curtailment is activated. The active power curtailment is allowed to reduce the infeed of active power as much as it is needed to bring the voltage back within the limits.

3.3.2 Coordinated Control

The coordinated voltage control presented in this work combines the local voltage control for the DG units with an extended control for the setpoint of the AVC relay. Figure 3.1 gives an overview over a low and medium voltage distribution system with coordinated voltage control. Controllable DG units are connected to the medium voltage network but also directly at the customer side on the low voltage level. The different controllers and their location as well as the required communication are illustrated.

[4]When the DG unit is feeding in active power it has of course to be present and available. Thus in that case the network operator can rely on its reactive power capability for voltage reduction, which is needed to compensate for the voltage rise introduced from the infeed of the DG unit active power.

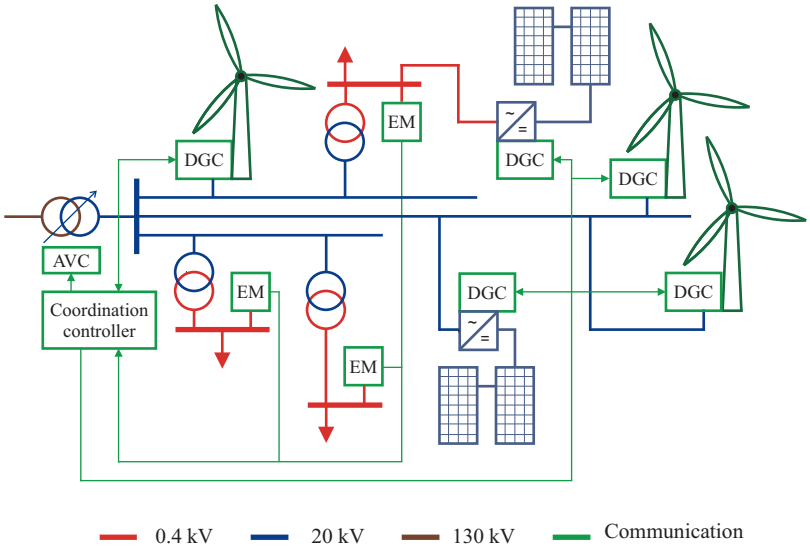

Figure 3.1: Scheme over coordinated voltage control in a distribution system with three typical feeder types and DG at low and medium voltage level.

Electronic electricity meters with communication are utilized to obtain actual voltage measurement data at the customer connection points. Depending on the size of the network and the availability of communication, all meters in the corresponding area can be included or some meters at exposed locations have to be chosen beforehand. The continuous voltage measurements from electricity meters are collected and analysed by a central unit. The central unit is then selecting the minimum and maximum voltages and sends them to the AVC controller. There they are used to determine the setpoint of the AVC relay depending on the actual network voltage at the customer side. Thus the setpoint is adapted according to the actual load and generation situation in the network.

With this configuration the setpoint value for the AVC relay and thus the voltage at the secondary side busbar of the substation is no longer constant. The actual setpoint is instead determined by the AVC controller which adapts the setpoint with respect to the present network voltages affected by the load and generation. When the voltage decrease along the feeders is large, i.e. in high

load situations, the AVC setpoint is high as shown in Figure 1.2(a). This corresponds to the setting that is applied in the case with a fixed setpoint to guarantee a sufficient voltage at all connection points. During periods with a low voltage decrease along the feeders, i.e. in low load situations, the AVC setpoint is lower as illustrated in Figure 1.2(b). Then a larger part of the voltage band is available for voltage rises by active power infeed from DG units.

Altering the AVC setpoint makes it possible to move the used voltage band between the predefined limits but leaves its width unchanged. Local DG control (i.e. the use of reactive power and active power curtailment) reduces the width of the used voltage band. Hence, benefits from the use of coordinated control for the AVC relay is limited to cases in which the difference between the maximum and minimum network voltage is less than the total available voltage band. If the voltage difference is larger than the available voltage band, the setpoint for the AVC relay has to be chosen to satisfy the lower voltage limit at the customer connection points. The upper voltage limit (probably) at the DG unit connection points has then to be maintained by the DG units, either by reactive power consumption or by active power curtailment. The complete control structure for coordinated voltage control as described in this work is shown in Figure 3.2.

Since voltage control by adapting the position of the on-load tap changer does not introduce additional losses, the priority for long term voltage control is on the tap changer. As there is a delay for the tap changer operation, the faster voltage control by reactive power will take over for short time voltage control.

In case of interruption of the communication it is still possible to fall back to the worst case scenarios. That means the setpoint of the AVC relay is set to satisfy the maximum voltage decrease occurring at maximum load without any generation. The DG unit local controller have then to maintain the upper voltage limit locally. That suspends the benefits from coordinated voltage control during the time of communication outage but ensures a proper management of the network voltage.

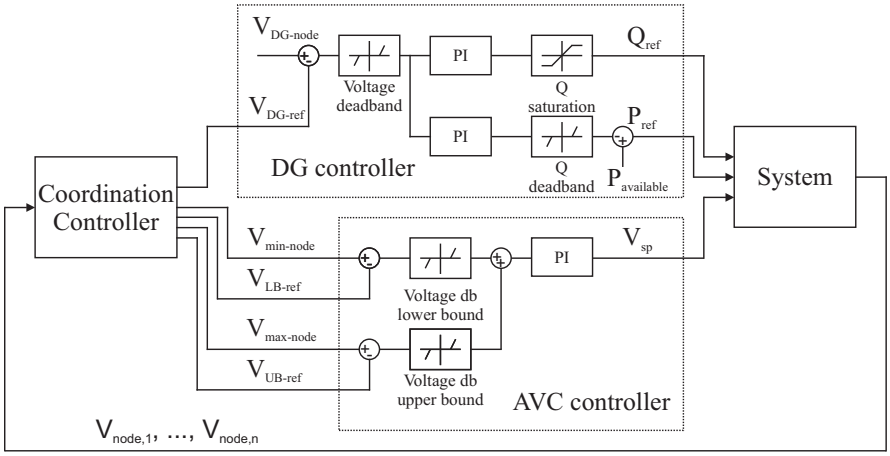

Figure 3.2: Scheme over coordinated voltage control which includes control of the AVC setpoint and active and reactive power control by the DG units. Notice the non-linearities in the P and Q channels of the DG controller, which ensures that curtailment starts first when reactive sources have been exhausted.

AVC Controller for Coordinated Control

When coordinated voltage control is used, the AVC controller obtains the lower and upper voltage limits in the network from the central controller. At the same time the actual minimum and maximum voltage collected from the electricity meters at the customer side are provided to the AVC controller, too.

The controller subtracts the lower boundary from the actual minimum voltage and sends the result to the dead band block for the lower boundary. In parallel the same procedure is executed for the upper boundary and the actual maximum voltage. The results of the two dead band blocks are then summed and fed to a PI-controller, which determines the setpoint voltage for the AVC relay. During low load periods the lowest voltage in the network will probably be comparatively close to the voltage at the substation and the setpoint for the AVC relay can be reduced without violating the lower voltage limit. Therefore a larger voltage band is available for voltage rise caused by DG

units. However, during high load periods the setpoint of the AVC relay will become the same as in the case of a constant voltage policy to satisfy the lower voltage boundary.

Although the AVC setpoint is maintained by the AVC controller, the AVC relay still has its own functionality which are the internal dead band that prevents repeated tap changer operations and a time delay to limit the tap changer operations in the case of short time voltage variations.

DG Controller for Coordinated Control

In the current implementation the DG controller behaves in the same way as with local DG control which is described in section 3.3.1. Thus the DG control is able to operate also in cases of communication outage and ensure an acceptable voltage at the DG connection point. Since the active and reactive power setpoints for the DG units are calculated locally, the delay which occurs from the communication is omitted.

For changes in the network configuration and future optimization it is possible to update the voltage setpoint for the DG unit from the central controller. Furthermore the feedback of the actual reactive power consumption and active power curtailment could be used by the central controller to optimize the total active and reactive power output in case of several DG units.

3.4 Summary

Voltage control in distribution systems has been discussed in this chapter. To start with, different voltage control alternatives that are available in distribution networks on the low and medium voltage level have been introduced and their efficiency and availability regarding voltage control in networks with DG has been studied. The automatic voltage control relay at the substation transformer and electronic electricity meters have been identified as two examples for automation in distribution networks. An algorithm for voltage

control in active distribution networks with DG has been proposed. Local and coordinated voltage control have been considered as alternatives to control the voltage according to the actual network situation.

Chapter 4

Control Verification in Svalöv Network

In the previous chapters distribution networks and the integration of distributed generation were explained and methods for voltage control in distribution networks have been introduced. In this chapter the different voltage control strategies are simulated in an existing Swedish distribution network. The results obtained from voltage control with the proposed control algorithm are evaluated and compared to the base case and the partial integration of the control strategies.

4.1 Test System

The network which is used in this case study is based on the existing medium and low voltage distribution network in the area around the town Svalöv in the South of Sweden. As the network is mainly supplying a rural area, the lines are comparatively long and thus the network rather weak. Despite being a rural area, there are some villages and small towns with a higher housing density. Already when this work started, a large amount of DG was connected to the network and since then the DG penetration has been increased further. The peak load of the network was about 28 MW while the minimum load was only around 5 MW. At that time approximately 13 MW of wind power were connected. Hence, during some time periods the generation could exceed the consumption and active power is injected to the overlying 130 kV network.

During normal operation the distribution network is supplied by one substation with two parallel HV/MV transformers from 130 kV to 20 kV but only one of them in operation. The capacity of the primary transformer is 40 MVA. Eight medium voltage feeders are connected to and supplied by the 20 kV busbar of the substation. Each of the three typical feeder types is present in the case study network. There are three pure load feeders, one pure generation feeder and four mixed load and generation feeders. As is often the case in such a kind of network, the MV feeders are built with overhead lines and underground cables, except the pure generation feeder, which is fairly new and purely consists of underground cables. The total length of the included medium voltage lines is roughly 130 km. Figure 4.1 shows a reduced schematic of the eight medium voltage feeders at Svalöv substation, the total length of the medium voltage lines in each feeder and the nodes at each feeder.

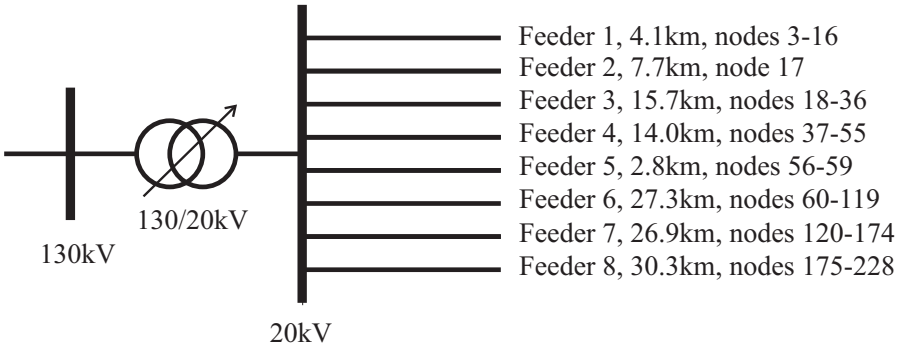

Figure 4.1: Schematic of the medium voltage busbar at Svalöv substation with all medium voltage feeders, their length and the corresponding network nodes.

The MV voltage feeders are supplying around 170 MV/LV substations with their 20/0.4 kV transformers and three 20/10 kV substations. In addition to the whole medium voltage network, the low voltage networks of two MV/LV substations are also modelled in the case study. The first LV network is connected to Feeder 7 and located in a residential area. It is supplied by a transformer with a rated capacity of 800 kVA. The low voltage network consists of seven main feeders. All lines are underground cables with a total cable length of approximately 4.7 km. Around 90 customers are connected to the LV net-

work in this secondary substation area. In contrast to the first LV network, the second one which is connected to Feeder 6 is quite rural. A transformer with a rated capacity of only 50 kVA feeds the LV network consisting of two main feeders and eight customers are connected to that network. The two feeders are mainly consisting of overhead lines and have a total length of about 0.8 km.

4.2 Simulation of Coordinated Voltage Control

To simulate the network voltages by power flow calculations, the existing distribution network described in the previous section has been modelled with the MATLAB power system simulation package MATPOWER [68].

Beside the physical network configuration, load and generation profiles are needed to perform the simulations. To obtain as realistic values as possible, recorded time series are used. Regarding the load and the wind power, measurements from the case study area are available. As the measurement values are feeder based, they are spread on the network nodes according to the ratio of their load. Since PV data recordings were not available from this area, data from another place in the South of Sweden has been chosen.

The time series have a resolution of 60 seconds. To reduce the huge amount of data and the computation time, the simulations are carried out over a time period of one week. Since the control algorithm also runs an internal loop every 20 seconds, in total $20160\,(= 3 \cdot 60 \cdot 24 \cdot 7)$ power flow calculations are executed. The interval of 20 s is chosen for keeping the amount of data low and it is seen as reasonable to obtain updated voltage measurements from the electricity meters within this time span.

The profiles for load, wind power generation and PV generation obtained from the measured time series are depicted in Figure 4.2. In the time series for the chosen week several characteristic operation situations are included. There are for example periods with high load and nearly no generation from the DG units (e.g. around hour 40). Whereas during other time periods the generation is quite close to the rated power from wind power (e.g. around

hour 72) or PV (e.g. around hour 12) or even both of them (e.g. around hour 84).

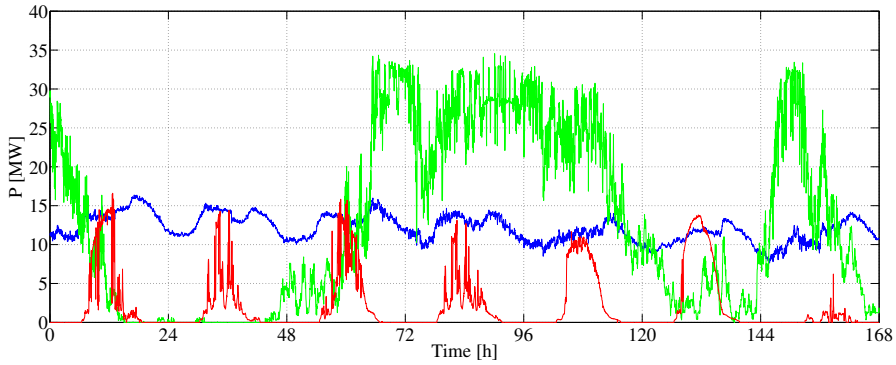

Figure 4.2: Total network load profile and generation profiles of wind power and PV generation for the simulated time period of one week based on the recorded time series with one-minute values (green line: wind power generation, red line: PV power generation, blue line: load).

Comparing the power fed-in from wind turbines and PV, it is observed that the generation profile of the PV to a large extent has a quite regular pattern and it fits the load profile rather well since the output is often high during the middle of the day when also the system is heavily loaded (e.g. around hours 12, 36, 60 and so on). The generation profile from the wind turbines has a less regular pattern and characteristically alternating periods of high generation and periods of low generation but also within periods of high generation the variation is large. Due to the higher fluctuation of the wind power generation, PV and wind power generation can both complement (e.g. around hour 36 and 130) or enforce (e.g. around hour 84) each other.

Due to the size and complexity of the network the following simplifications are introduced:

1. The three 10 kV subnetworks in the 20 kV network have been aggregated at the corresponding 20/10 kV substations and are treated as single loads.

2. Some short line sections which do not influence the power flow in a mentionable manner have been eliminated and/or combined and also some substations close to each other have been bundled. Thereby the number of medium voltage network nodes is reduced from about 250 to 228.

3. To distribute the feeder load among the nodes, an equal share between the rated power of the loads at each feeder is assumed. The maximum power of each node is obtained from Velander's equation, which derives the peak load from the yearly energy consumption [54].

4. The active power generation of each connected wind turbine is supposed to be the same fraction of its rated capacity, obtained from the recorded wind power time series. For the PV units the same assumption is applied with the recorded PV power time series.

5. All loads have the same power factor of $cos\varphi = 0.95(ind)$.

For the simulations, the test system is supplied by one HV/MV transformer with a rated capacity of 40 MVA. This transformer is equipped with an on-load tap changer which has ± 9 steps to change the winding ratio. The step size is chosen to a common value of 1.67 %. An AVC relay is modelled to control the tap changer position according to a setpoint value. To avoid continuous OLTC operations the dead band in the AVC relay is set to 2 % $(= 1.67 \cdot 1.2)$ and a time delay of 200 s is also activated.

From the already existing wind turbines with a total capacity of just under 13 MW no voltage limit violations are expected since the network is operated with broad margins. Thus more DG capacity is added to the case study to analyse the impact of increasing DG capacity. To stress the control algorithm and extend the width of the voltage band, additional 25 MW of nominal wind power output and 16 MW of PV capacity are connected to the medium voltage network. The additional DG units are connected to weak nodes in the network and the rated capacity does often reach the ampacity limit of the lines where the DG units are connected. The included part of the low voltage distribution network is extended with 1.1 MW of PV capacity. The distribution of the DG units on the feeders of the test system is shown in Table 4.1.

In the residential low voltage network 88 PV installations with a rated power of 12 kW[5] each are assumed. Consequently in total there are 1056 kW of PV power installed in that secondary substation area. Two PV installations each with a capacity of 30 kW, thus in total 60 kW, are connected to the low voltage network in the rural area.

Table 4.1: Total maximum load and rated generation capacity connected to the feeders of the case study network.

Feeder	Load [MW]	Wind power MV [MW]	PV power MV [MW]	PV power LV [MW]
1	5.8	0.7	0	0
2	0	9.0	0	0
3	5.1	0	0	0
4	1.7	6.9	2.0	0
5	4.0	3.0	6.0	0.060
6	1.9	0	0	0
7	5.3	14.4	6.0	1.056
8	4.2	3.8	2.0	0
$\sum$	28.0	37.8	16.0	1.116

Even if it may not apply for the already existing wind turbines in the test system, it is assumed that all DG units are controllable. Thus their active power output can be curtailed if necessary and the possible reactive power output is corresponding to a power factor between $cos\varphi = 0.89(ind)$ and $cos\varphi = 1$ independent from the actual active power generation. This means the DG units are able to consume reactive power corresponding to half their rated active power (i.e. $Q_{max} \approx P_{rated}/2$) during all operation conditions.

The network voltages at the customer connection points are monitored by

[5]The rated power of 12 kW corresponds roughly to an area of 80 m^2 if efficiency factor 0.15 is assumed. In addition, the total rated power of all assumed PV installations corresponds also to the transformer capacity if a minimum load of 20 % and some overrating are assumed.

electricity meters and also DG units are monitoring the voltage at their points of connection. Thus the voltages at all relevant network nodes are available for the control algorithm. In the parts of the network where the low voltage network is not modelled, the voltage is taken from the medium voltage busbar of the secondary substation, i.e. at the primary side of the MV/LV transformer.

Limiting the increase of the network voltage to 2.5 % or 5 % for mixed and pure generation feeders respectively is common praxis in Swedish distribution networks when DG is connected. These strict limits are no longer necessary if voltage control, which monitors the actual network voltage, is applied. Thus the use of a larger voltage band should be acceptable since not only worst case scenarios have to be considered. Even though the European standard EN 50160 as well as the national Swedish recommendation for the voltage quality would allow voltage variations of $\pm 10\,\%$, it is decided to preserve some part of the available voltage band for the voltage variation in the LV networks which are not included in the model and to have some margin. Hence, on the MV level in the case study it is chosen to set the lower voltage limit to 0.95 pu and the upper voltage limit to 1.05 pu.

In the following section voltage control in an electricity distribution system with a high DG penetration is simulated. Control strategies with different degrees of automation are shown.

4.2.1 Local Control and Unity Power Factor

Local control and unity power factor is the control strategy which is most related to the one used when DG is connected to distribution networks today. Hence, it is assumed as the reference case. However, some extension is needed to allow a higher DG penetration as it would be possible with respect to the voltage limits for the worst case scenarios. Active power curtailment for all DG units is already included in the base case to ensure that the given voltage limits are followed even with maximum available generation. All control in this reference case is based on local measurements at the substation and the connection points of the DG units. The AVC has a fixed setpoint to satisfy the voltage requirements for maximum load and tries to keep the voltage at the

secondary side busbar of the substation constant. The DG units are feeding in their available active power until the upper voltage limit is reached. At that point active power curtailment is activated.

Active and Reactive Power

Figure 4.3 shows the need for reactive power consumption and active power curtailment as well as the infeed from the wind turbines (blue line) and the photovoltaic installations (green line) in the test system. As reactive power consumption is not available in this control strategy, the reactive power consumption is always zero (upper subfigure). However, to maintain the network voltage within the limits with a constant AVC setpoint and the DG units operating at unity power factor, active power curtailment is needed to some extent (middle subfigure). For the wind power units at maximum about 8 MW of curtailment is needed to limit the voltage (e.g. hour 108). At the same time the infeed from the PV installations has to be curtailed by roughly 2.5 MW. The maximum power that is delivered to the power system is 35 MW for the wind power and 17 MW for the PV power (lower subfigure).

Voltage

To verify the outcome of the voltage control the minimum and maximum network voltages are important figures. In Figure 4.4 the actual network voltages in the medium voltage network are depicted. Since the setpoint of the AVC relay is fixed and tuned to satisfy the lower voltage limit also during worst case scenarios, the lower voltage boundary is always respected. However, the upper voltage limit is violated with some margin during some short time periods before the active power curtailment has taken over. The highest voltage occurs around hour 105 and is about 1.065 pu, which is not critical according to the voltage quality criteria but above the upper boundary which is set in the controller. Operations of the on-load tap changer are quite well observable by the vertical changes in the figure (e.g. at hour 12).

In Figure 4.5 the minimum and maximum voltages at each medium voltage

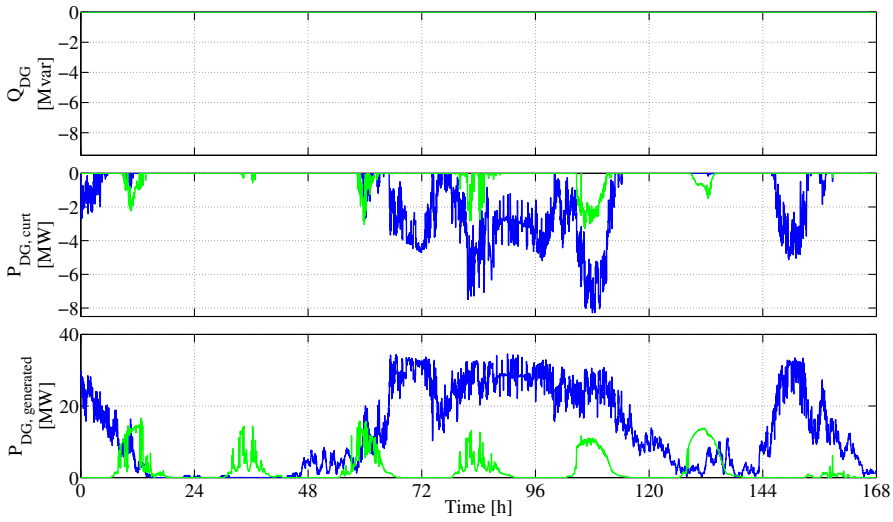

Figure 4.3: Total reactive power consumption (upper subfigure), active power curtailment (middle subfigure) and generated power (lower subfigure) from the DG units connected to the test system when local control and unity power factor are applied for voltage control (blue line: wind power, green line: PV power).

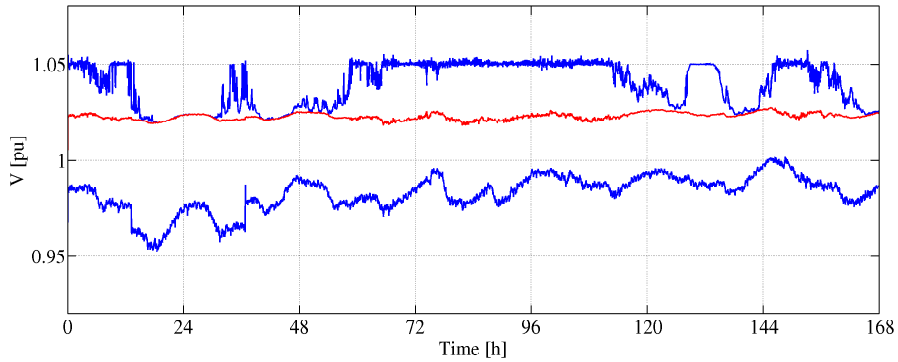

Figure 4.4: Minimum and maximum voltage in the medium voltage part of the test network (blue lines) and the voltage at the MV substation busbar (red line) to illustrate the used voltage span at each time step for local control and unity power factor from the DG units.

feeder are shown for each time step. The areas between the blue lines are the used voltage band in each feeder. The red line indicates the voltage at the substation medium voltage busbar. As feeder 2 is the pure generation feeder, there is only one blue line. Depending on the feeder topology, for some of the feeders only one of the two blue lines is visible since the other one is corresponding to the busbar voltage, e.g. feeder 3 and feeder 7. While feeder 1 and feeder 5 have a very narrow voltage band, feeder 3 and feeder 4 utilise a larger span of the available voltage band. Feeder 3 can easily be identified as the pure load feeder as the voltage decrease is clearly shown. Mainly in feeder 4 and feeder 6 the voltage reaches the upper voltage limit and needs to be limited to maintain the voltage limits.

The corresponding LV network voltages can be found in Figure 4.6. In the upper subfigure the used voltage band in the residential low voltage network is illustrated. The voltage band of the rural feeder is depicted in the lower subfigure. For both low voltage networks the voltage peaks at noon arising from the active power injection are clearly shown. In the residential secondary substation area the voltage reaches often the upper voltage limit as for instance at hour 12, hour 60 and hour 132. Between hour 65 and hour 100 the impact from the wind power in the overlying network can be seen. The lower voltage limit is not an issue in the two low voltage networks.

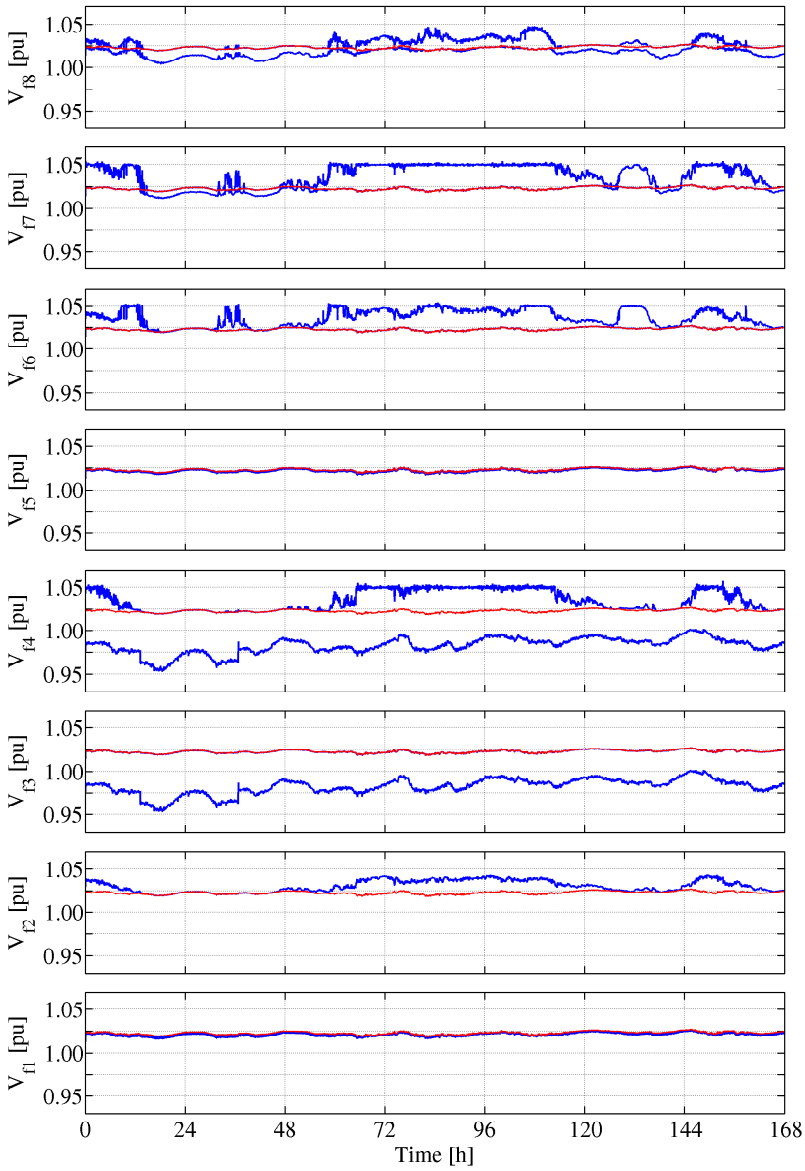

Figure 4.5: Minimum and maximum voltage at all medium voltage feeders (blue line) and MV busbar voltage at the substation (red line) during the simulated time period for local control and unity power factor from the DG units.

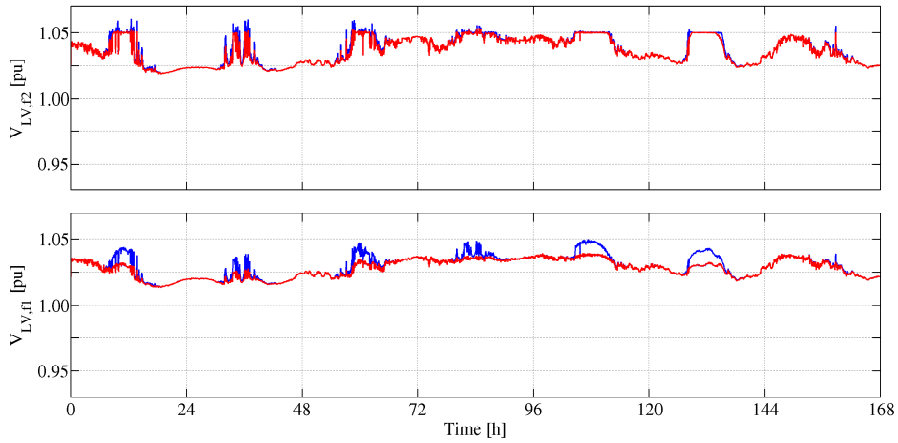

Figure 4.6: Minimum and maximum voltage at all low voltage feeders (blue lines) and secondary substation busbar voltage (red lines) during the simulated time period for local control and unity power factor from the DG units (upper subfigure: residential LV network, lower subfigure: rural LV network).

Summary for Local Control and Unity Power Factor

The voltage control manages the voltage in the case study quite well. The lower voltage limit is kept due to the setpoint of the AVC relay which is tuned to manage even the worst case scenario of maximum load. To keep the upper voltage limit a considerable amount of the generated wind and PV power has to be curtailed during some time periods. In Table 4.2 some key numbers of the results are listed.

Table 4.2: Summary of some basic results from local voltage control and unity power factor.

Transferred energy [MWh]	4539
Curtailment [%]	7.8
OLTC Operations [number]	1
Network losses [%]	1.2

4.2.2 Local Control and Variable Power Factor

Local control and variable power factor is a voltage control strategy which is based on the previous one but now the DG units have reactive power capability activated. Thus DG units are still feeding in their actual maximum power until the upper voltage limit is reached. However, before active power curtailment is activated, the DG units start to consume reactive power to limit the voltage at their connection point. First if the minimum power factor (i.e. $cos\varphi = 0.89(ind)$) is reached and the voltage is still at the limit, the active power output is limited. The voltage at the medium voltage busbar in the substation is still controlled based on local voltage measurements and kept constant by the AVC relay.

Active and Reactive Power

Since the setpoint of the AVC relay is still fixed the observation of the upper voltage boundary has to be managed by the local control of the DG units only. In contrast to the previous case the DG units are now able to consume reactive power for voltage control and active power curtailment is no longer the only possibility to limit the network voltage. The total reactive power consumption of all DG units (upper subfigure) as well as their active power curtailment (middle figure) and the infeed of active power (lower subfigure) are shown in Figure 4.7. Compared to the base case the need for active power curtailment could be reduced during some time by applying reactive power consumption which now is needed to a large extent to keep the voltage within the limits. Nevertheless, still limiting the active power output of the DG units is used during several time periods.

Voltage

The minimum and maximum voltage in the medium voltage part of the network and the total used voltage band are presented in Figure 4.8. As in the previous case managing the lower voltage limit works quite well because the fixed setpoint of the AVC relay is chosen to satisfy this criterion. The heavy

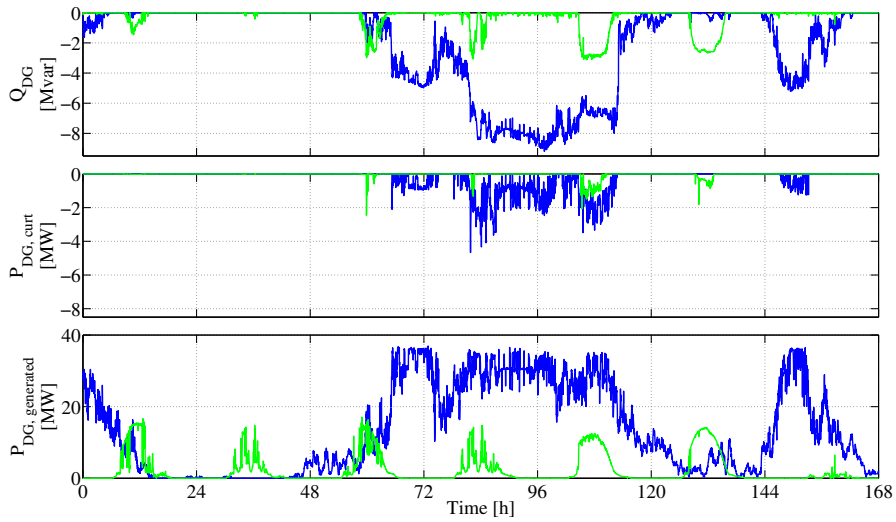

Figure 4.7: Total reactive power consumption (upper subfigure), active power curtailment (middle subfigure) and generated power (lower subfigure) from the DG units connected to the test system when local control and variable power factor are applied for voltage control (blue line: wind power, green line: PV power).

consumption of reactive power leads to a lower voltage at the MV busbar at the substation and causes a tap changer operation at around hour 60. Maintaining the upper voltage boundary is more complex. The voltage limit set for the controller is violated during some shorter time periods when the active power generation varies faster than the controller reacts. Nevertheless the voltage is within the limits for satisfying the voltage quality criteria.

Summary for Local Control and Variable Power Factor

Local voltage control with a variable power factor from the DG units is in principle suitable to keep the voltage within reasonable limits. For this voltage control strategy, still active power has to be curtailed since in the test system reactive power on its own is not able to maintain the voltage limits. The setpoint of the AVC relay has to be carefully chosen and some margin be-

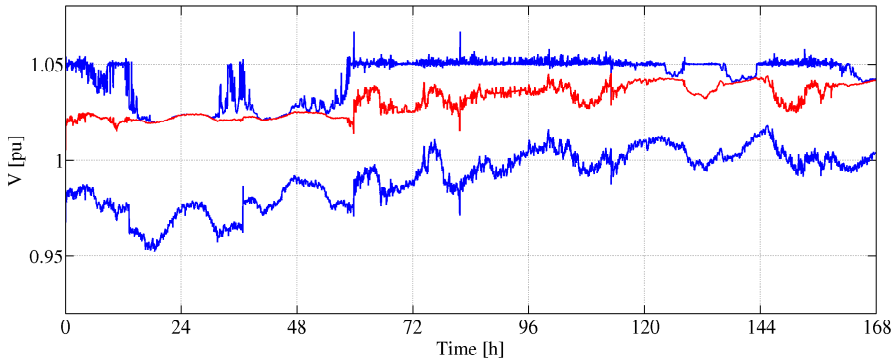

Figure 4.8: Minimum and maximum voltage in the medium voltage part of the test network (blue lines) and the voltage at the MV substation busbar (red line) to illustrate the used voltage span at each time step for local control and variable power factor from the DG units.

tween the settings for the controller and the boundaries of the voltage quality criteria are needed. Due to the large amount of reactive power consumption and the resulting voltage variation over the HV/MV transformer tap changer operations are required to keep the substation voltage constant. From Table 4.3 the key numbers of the simulation results can be derived.

Table 4.3: Summary of some basic results from local voltage control and variable power factor.

Transferred energy [MWh]	4699
Curtailment [%]	1.9
OLTC Operations [number]	4
Network losses [%]	1.6

4.2.3 Coordinated Control and Unity Power Factor

The coordinated control and unity power factor strategy is an extension of the control strategy in section 4.2.1. The setpoint of the AVC relay which controls the tap changer position is no longer constant. Instead the actual network voltages recorded by the electricity meters are collected and the minimum and maximum values are communicated to the AVC controller. Based on these values the AVC controller determines the setpoint for the AVC relay. Therefore during low load situations a lower OLTC position is possible and the range for voltage rises caused by the infeed of active power from the DG units is increasing. Regarding the DG units this strategy is unchanged compared to the base case and the DG units are still working at unity power factor. The active power output is at the actual maximum until active power curtailment is needed to ensure a proper network voltage at their connection point. Due to the reason that the local control of the DG units reacts faster than the control of the OLTC it may happen that some active power curtailment is used until the OLTC reaches its optimal position for the actual network status.

Active and Reactive Power

As reactive power is not available for voltage control in this control strategy all voltage limiting has to be done by either tap changer operations, if possible without violating the lower voltage limit, or active power curtailment. Thus the reactive power consumption in the upper subfigure of Figure 4.9 is zero. The needed active power curtailment is depicted in the middle subfigure. It is less than with the first strategy in which the AVC setpoint is fixed and also less than in the second strategy with a fixed AVC setpoint and reactive power consumption but still considerable during some time periods. How much active power is injected from the wind power and PV generators can be found in the lower subfigure. For example around hour 75 more active power is fed-in since the need for curtailment is less.

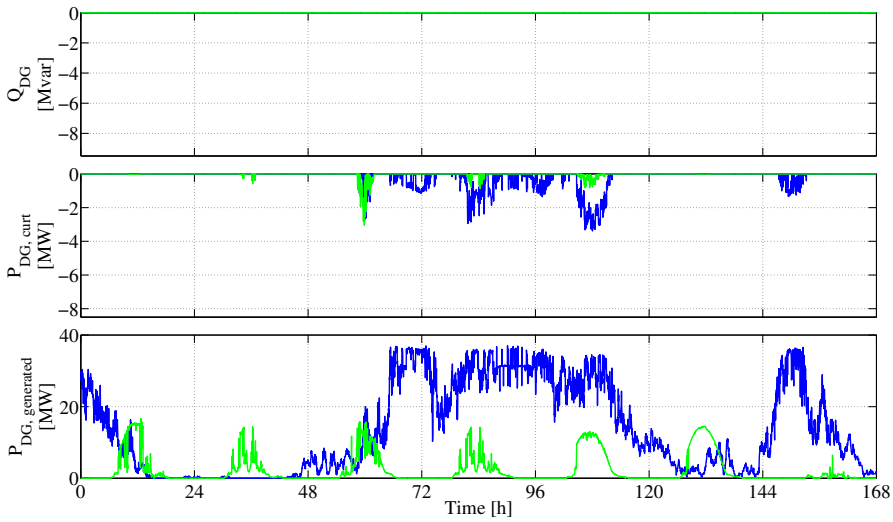

Figure 4.9: Total reactive power consumption (upper subfigure), active power curtailment (middle subfigure) and generated power (lower subfigure) from the DG units connected to the test system when coordinated control and unity power factor are applied for voltage control (blue line: wind power, green line: PV power).

Voltage

As shown in Figure 4.10 the lower voltage limit is kept quite well also with a variable setpoint of the AVC relay. Around hour 15 the lower boundary is violated for a short time period until the OLTC is performing a step bringing back the voltage within the limits. The upper voltage limit is violated several times for short time periods until the control is able to get the voltage back into the desired voltage span. Nevertheless the voltage is still quite far away from the limits for the voltage criteria defined by the standards. In Figure 4.11 the setpoint for the AVC relay and the actual MV voltage at the substation where it is controlled by the AVC relay are shown. With respect to the dead band, which is included in the AVC relay, the voltage at the substation MV busbar follows the setpoint of the AVC relay quite well. Between hour 60 and hour 75 the consequence of the dead band becomes quite clear. The number of tap changer operations is still acceptable although the OLTC is used for

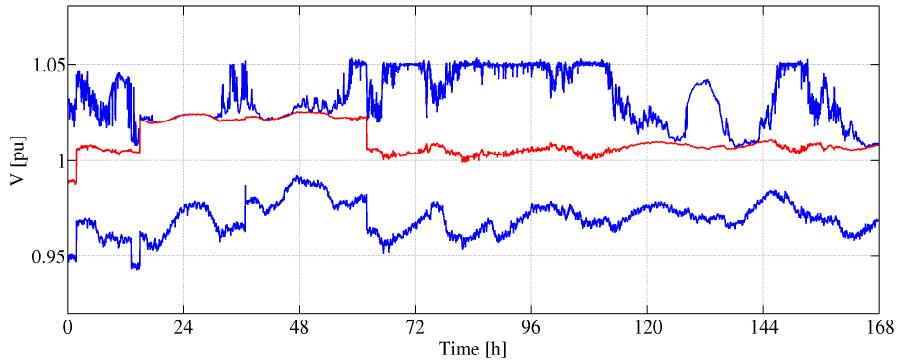

Figure 4.10: Minimum and maximum voltage in the medium voltage part of the test network (blue lines) and the voltage at the MV substation busbar (red line) to illustrate the used voltage span at each time step for coordinated control and unity power factor from the DG units.

voltage control.

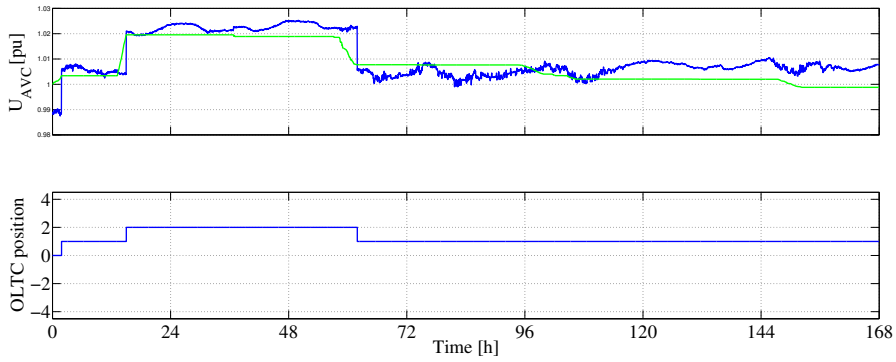

Figure 4.11: Voltage setpoint for the AVC relay (green line in upper subfigure) and actual voltage at the medium voltage busbar of the HV/MV substation (blue line in upper subfigure) and the current tap changer position of the OLTC at the HV/MV substation (lower subfigure).

Summary for Coordinated Control and Unity Power Factor

The voltage is kept within the desired limits quite well most of the time by coordinated voltage control with unity power factor. During some short time periods the voltage abandons the desired voltage span but is taken back by the voltage control of the AVC. As the variable setpoint of the AVC alone is not sufficient to maintain the voltage within the desired boundaries, active power curtailment is still necessary. As shown in Table 4.4 the number of tap changer operations is slightly higher as in the base case but still limited.

Table 4.4: Summary of some basic results from coordinated voltage control with unity power factor.

Transferred energy [MWh]	4712
Curtailment [%]	1.4
OLTC Operations [number]	3
Network losses [%]	1.5

4.2.4 Coordinated Control and Variable Power Factor

Coordinated control and variable power factor combines the benefits from the extended control strategies in section 4.2.2 and section 4.2.3. The setpoint of the AVC relay is variable and determined by the controller according to the actual network voltage provided by the electricity meters. Furthermore, the DG units are limiting the voltage at their connection nodes by reactive power consumption and active power curtailment. When the upper voltage limit is reached, reactive power consumption will be activated until the voltage limit is satisfied or the maximum reactive power consumption is at the maximum available. Is the voltage in the latter case still at the limit, active power curtailment is activated to reduce the voltage.

Active and Reactive Power

Figure 4.12 shows the total reactive power consumption (upper subfigure), active power curtailment (middle subfigure) and the total generated active power (lower subfigure) from PV and wind power in the test system. During times of high wind power and PV generation a large amount of reactive power has to be consumed by the DG units to follow the voltage limits but during other times reactive power consumption is hardly needed any more. Active power curtailment is only needed to a small extent around hour 84. Thus more active power from the DG units as before is fed-in to the distribution network.

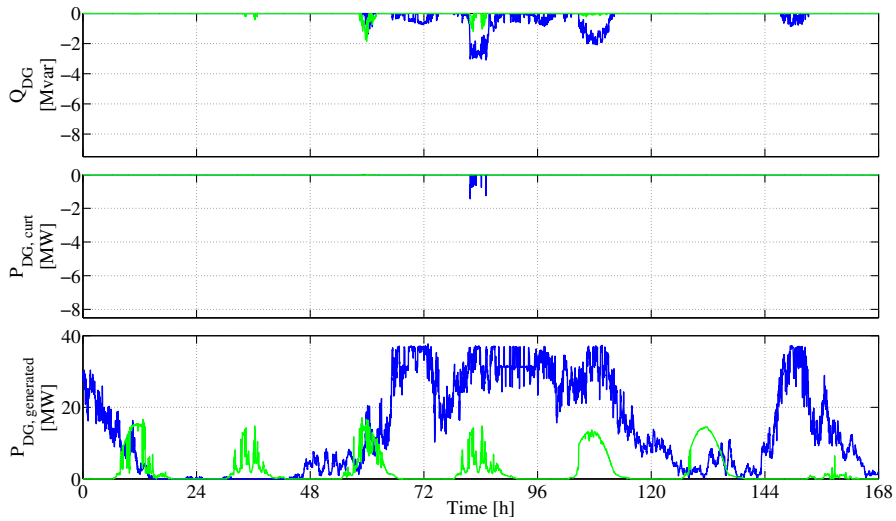

Figure 4.12: Total reactive power consumption (upper subfigure), active power curtailment (middle subfigure) and generated power (lower subfigure) from the DG units connected to the test system when coordinated control and variable power factor are applied for voltage control (blue line: wind power, green line: PV power).

Voltage

Coordinated voltage control with a variable setpoint of the AVC relay and a variable power factor from the DG units are able to maintain the voltage quite well within the predefined range. As shown in Figure 4.13 both the upper and lower voltage limits for the controller are violated during very short periods with a small margin but soon they are restored by the controller. In

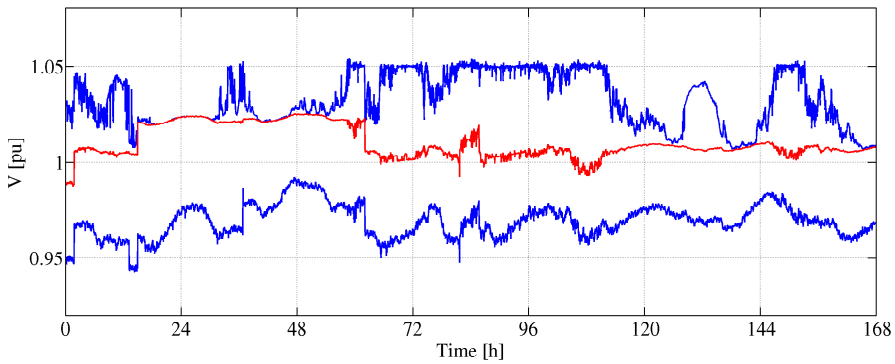

Figure 4.13: Minimum and maximum voltage in the medium voltage part of the test network (blue lines) and the voltage at the MV substation busbar (red line) to illustrate the used voltage span at each time step for coordinated control and variable power factor from the DG units.

the upper part of Figure 4.14 the setpoint of the AVC relay (green line) and the real voltage at the MV busbar (blue line) are shown. The busbar voltage follows the setpoint quite well within the tolerances needed for the dead band due to the tap changer step size. The lower part of Figure 4.14 depicts the actual tap changer position of the OLTC at the HV/MV substation transformer. Although there are some additional tap changer operations due to its contribution to the voltage control, the total number of tap changer operations is still acceptable.

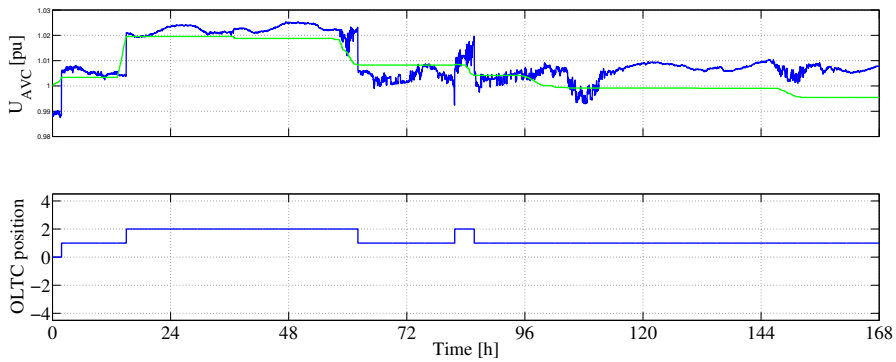

Figure 4.14: Voltage setpoint for the AVC relay (green line in upper subfigure) and actual voltage at the medium voltage busbar of the HV/MV substation (blue line in upper subfigure) and the current tap changer position of the OLTC at the HV/MV substation (lower subfigure).

Summary for Coordinated Control and Variable Power Factor

Table 4.5 summarizes the results for coordinated control with a variable setpoint of the AVC relay and variable power factor. With this control strategy, the voltage during the studied test period is managed quite well. Reactive power consumption is needed to some extent but the need for active power curtailment is only marginal. Furthermore the number of tap changer operations is increasing slightly but still not significant.

Table 4.5: Some basic results from coordinated voltage control with variable power factor.

Transferred energy [MWh]	4749
Curtailment [%]	< 0.1
OLTC Operations [number]	5
Network losses [%]	1.5

4.3 Summary

In this chapter four different voltage control strategies for low and medium voltage distribution networks with high DG penetration have been simulated and analysed by means of a case study based on an existing distribution network in the South of Sweden. As reference a base case similar to common voltage control in medium and low voltage distribution networks is used. The voltage at the MV side of the HV/MV substation is kept constant and DG units participate in voltage control by active power curtailment only when the upper voltage boundary is violated. The three other control strategies apply in addition a variable setpoint of the AVC relay and/or reactive power consumption from the DG units.

The chosen network has already today a high DG penetration and more installations are planned. For the case study the existing wind power capacity in the medium voltage network is extended to 38 MW. Additional 17 MW of PV capacity are connected in the medium (16 MW) and low (1 MW) voltage networks. So the connected DG capacity is roughly twice as much as the maximum load and actually around eleven times the minimum load. The used load and wind power profiles are derived from recorded values in the substation area. For the PV profile no data has been available but recorded data from another place in the South of Sweden has been used for the PV generation profile instead.

Voltage control in the medium voltage parts of the network is based on changing the position of the on-load tap changer. This measure affects the voltage on the entire MV and LV network connected to the same HV/MV substation and the applicability is limited depending on the width of the used voltage band. On the contrary reactive power consumption and active power curtailment are rather affecting on node basis. This is a benefit especially in inhomogeneous networks where the voltage profile differs strongly between the feeders.

In the low voltage parts of the case study network only reactive power consumption and active power curtailment are available for voltage control. The transformers in the secondary substations from the medium to the low volt-

age level are often equipped with fixed tap changers and hence they are not able to participate in active voltage control. As the case study shows, voltage control in low voltage networks by changing the reactive power flow is possible to some extent. This is basically depending on the MV/LV transformer reactance. As a consequence voltage control with reactive power affects all nodes in the LV network that belong to the same secondary substation.

Table 4.6 shows the results from the different control strategies in detail. In the second column the results from the simulation of the base case can be found.

Table 4.6: Simulation results from the different voltage control strategies applied to the test system.

	Local Control, Unity PF	Local Control, Variable PF	Coordinated Control, Unity PF	Coordinated Control, Variable PF
Transferred energy [MWh]	4539.0	4698.6	4712.1	4749.4
Consumed energy [MWh]	2033.2	2033.2	2033.2	2033.2
Uncurtailed energy from DG units [MWh]	2716.7	2716.7	2716.7	2716.7
Obtained DG energy [MWh]	2505.8	2665.3	2678.9	2716.2
Curtailed DG energy [MWh]	211.0	51.4	37.8	0.5
Curtailed DG energy [% of uncurtailed energy]	7.8	1.9	1.4	< 0.1
Consumed reactive power [Mvarh]	0	404.3	0	30.4
Network losses [MWh]	54.8	73.5	68.5	72.7
Network losses [% of transferred energy]	1.21	1.57	1.46	1.53
Number of OLTC steps	1	4	3	5
Minimum network voltage [pu]	0.953	0.953	0.941	0.941
Maximum network voltage [pu]	1.078	1.077	1.077	1.076
Average voltage at substation [pu]	1.023	1.031	1.010	1.010

Compared to the base case the required curtailment can be reduced significant from 7.8 % to 1.9 %, if the DG units control their reactive power consumption according to the network voltage. At the same time increases the number of tap changer operations from one to four, notwithstanding the constant setpoint of the AVC relay. This is a consequence of the increased reactive power

flow through the HV/MV substation transformer, which causes larger voltage variations at the secondary side busbar where the voltage is controlled. The average voltage level at the medium voltage side of the substation remains unchanged as the AVC relay setpoint is still constant. The network losses which are 1.21 % in the base case are increasing to 1.57 %. The explanation is the large amount of reactive power to be consumed and the higher utilization of the lines.

With a variable setpoint of the AVC relay and unity power factor policy from the DG units, the required curtailment of active power decreases to 1.4 %. That is a significant reduction compared to the base case and slightly less than for local DG control. In comparison with the base case, the number of tap changer operations increases to three which is still a low number. Because of the absence of reactive power from the DG units the network losses are less than for the case of local voltage control and variable power factor from the DG. By reason of a more intensive network utilization the losses are still higher than in the base case.

In case of coordinated voltage control and DG units with a variable power factor reduces the need for active power curtailment to less than 0.1 %. Accordingly the combination of a variable setpoint for the AVC relay and DG control is even more effective than each method on its own. The number of OLTC operations is now five and thus slightly higher than in the previous cases. Due to the higher utilization of the network and the use of reactive power consumption for voltage control the losses exceed the ones from the base case but it is situated between the voltage controls with only one control method.

The results illustrate that active voltage control in distribution networks increase the hosting capacity for DG generation without the need for network extension and only a small amount of active power curtailment. Thus active voltage control is a cost efficient alternative for DG integration especially in networks where load and generation vary significantly.

As soon as active power curtailment is tolerated for voltage control, there is in principle no longer a limit for the hosting capacity in a distribution network. However, if more capacity is connected, the increasing curtailment reduces

the level of utilisation. Thus there is still a limit for the DG capacity if a few percent of the total available energy is the maximum curtailment to be accepted.

The chosen distribution network and its configuration are only one example for the benefits that can be obtained by coordinated voltage control in distribution networks with a high penetration of distributed generation. Even though the network configuration is realistic the absolute numbers can of course vary between different networks and network configurations, i.e. number of DG units, their capacity and location. However, as the conditions, e.g regarding the AVC setpoint and the line characteristics, are similar for many distribution networks, there are good reasons to assume that likewise results could be obtained by introducing coordinated voltage control in other distribution networks.

Chapter 5

Field Test

In the previous chapters coordinated voltage control has been introduced and verified by simulations based on data of an existing distribution system. To stress the voltage control algorithm a lot of wind power and photovoltaics have been added to the existing system. The next step for introducing coordinated voltage control by active network management was to start a field test and apply the voltage control to a real system. The aim of the field test is to demonstrate the practical implementation of the coordinated voltage control which has been introduced in Chapter 3. The connection procedure for new distributed generation units usually takes quite a while and the connection of DG units to distribution networks normally requires large margins to ensure that the voltage limits are kept also for worst case scenarios. As a consequence DG connections, for which the voltage is expected to be close to the limits, are rather rare. Finally a distribution network with one wind turbine, which is operated close to the actual voltage limits, has been found. At the same time other technical preconditions have to be fulfilled but also the owner of the DG unit has to be involved and to agree to participate in the field test.

After considering a number of rural medium voltage distribution systems in the South of Sweden, a network suitably located has been selected for the field test. Compared to the simulations in Chapter 4 there are some limitations regarding the implementation of the coordinated voltage control in a real network for field test purposes. The available DG capacity for example is limited to the already installed DG unit and also the number of electricity meters for gathering the network voltage is restricted. And finally no ready-

for-use solutions are available for the communication setup.

5.1 Field Test Network

A rural medium voltage distribution network in the South of Sweden has been chosen for the field test. The network is fed by a 50/10 kV substation with a 12 MVA transformer. A spare 20/10 kV transformer is also available at the substation but has not been used during the field test. Both transformers are equipped with on-load tap changers for voltage control. As the 50/10 kV transformer is quite old there are only nine steps with a comparatively large step size of 2.7 %. The spare transformer has a more common tap changer with 17 steps of 1.67 %. However, the main transformer is able to vary the voltage with slightly less than ± 11 %.

The field test network consists of nine feeders as shown in Figure 5.1. Eight of these feeders are pure load feeders and one feeder has in addition a wind turbine connected. Five of the feeders are entirely with underground cables and the other four feeders are consisting of both overhead lines and underground cables. On the medium voltage level the total line length is around 164 km. The maximum load in the network is around 15 MW and the minimum load roughly 3 MW. The wind turbine is the only DG unit in the field test area and connected to feeder 15 which is one of the longest in the test system. It is equipped with a full-scale power converter and its rated capacity is $P_{DG,rated} = 800\,\text{kW}$ but somewhat higher output is possible. Thus the power flow through the substation transformer will probably not be reversed even in low load situations during which a lot of wind power is available. However, the active power in the feeder where the DG unit is connected varies roughly between 0.3 MW and 1.1 MW. Therefore a reversed power flow will occur quite often in this feeder and the voltage at the DG connection point is higher than at the secondary side of the substation during many periods.

In total there are nearly 110 secondary 10/0.4 kV substations connected to the 10 kV feeders and slightly less than 1700 customers are supplied by this distribution system. While most of the customers are residential there are also two larger industrial customers.

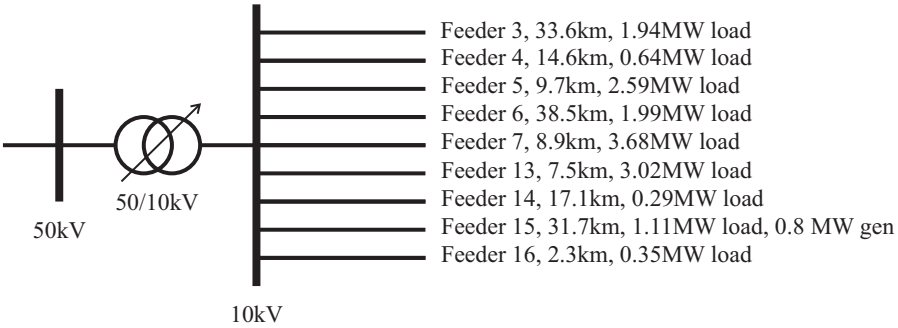

Figure 5.1: Schematic over 10 kV feeders of the field test distribution system.

5.2 Field Test Equipment

The main equipment used in the field test are the wind turbine, the AVC relay to control the OLTC position at the substation transformer and the electricity meters spread out at some secondary substations in the field test area. Also the communication used between the equipment and the central controller plays a key role. In the following sections a detailed overview of the main equipment is given.

5.2.1 Wind Turbine

A full-scale converter wind turbine of the type Enercon E-53, i.e. with a rotor diameter of 53 m, is installed in the field test distribution system and shown in Figure 5.2.

The wind turbine has a rated capacity of $P_{DG,rated} = 800\,\text{kW}$ which is available for wind speeds between 13 m/s and 25 m/s according to the upper subfigure in Figure 5.3. Already at a wind speed of 2 m/s the wind turbine is generating power but only to a very small extent (roughly 2 kW). Half the rated power, i.e. 400 kW, is reached somewhere between 8 and 9 m/s. Due to the full-scale converter the reactive power output can be chosen quite freely. As shown in the lower subfigure of Figure 5.3 the wind turbine converter

Figure 5.2: Field test wind turbine of type Enercon E-53 with a rated capacity of 800 kW and a reactive power capability of ±410 kvar.

is oversized so that the unit is able to consume or generate reactive power corresponding to somewhat more than $\pm 0.5 P_{DG,rated}$. For the installed wind turbine this means the reactive power output may vary between −410 kvar and 410 kvar. Since the maximum reactive power output is already reached at about 20 percent of the maximum active power output and is then available up to the maximum capacity of the wind turbine, the reactive power output is quite flexible.

The wind turbine is connected to the distribution system at the 10 kV level. At the wind turbine point of common coupling (PCC) the network short circuit impedance is $Z_{DG,SC} = (4.03 + \mathrm{j}5.14)\,\Omega$. As the network resistance is close to the network reactance, the wind turbine is not able to compensate the whole voltage rise caused by active power injection through reactive power consumption. However, reactive power consumption will have some noticeable

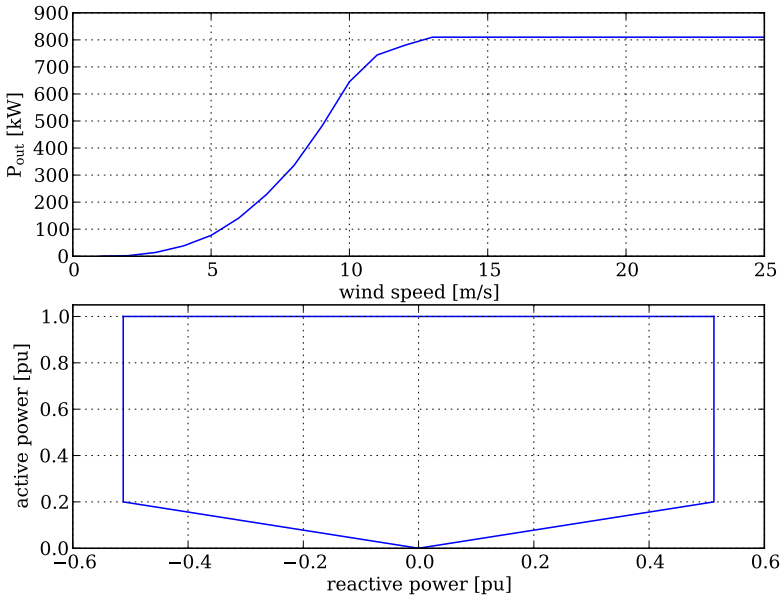

Figure 5.3: Active power output over wind speed diagram for a wind turbine of type Enercon E-53 with a rated capacity of $P_{rated} = 800\,\text{kW}$ (upper subfigure) and diagram of the reactive power capability subject to the active power output of the wind turbine (lower subfigure).

effect. Assuming a network voltage of 1 pu the voltage variation caused by the active and reactive power infeed from the wind turbine is according to Table 5.1. Thus the voltage rise when feeding in the rated capacity from the wind turbine is larger than the 2.5 %, which are recommended for distribution systems with load and generation in Sweden. However, by consuming reactive power the voltage rise could be reduced to around 1 %.

To make the wind turbine remotely controllable, it is equipped with a remote terminal unit (RTU). The RTU supports several communication protocols to read data from the wind turbine and adjust setpoints for e.g. the active and reactive power output. But also setting the power factor and using reactive

Table 5.1: Voltage variations caused by the active and reactive power infeed of the wind turbine at the PCC.

Voltage variation caused by active power injection		
ΔV [V/kW]	ΔV [V@800 kW]	ΔV [%@800 kW]
0.38	310.0	2.9

Voltage variation caused by reactive power injection		
ΔV [V/kvar]	ΔV [V@410 kvar]	ΔV [%@410 kvar]
0.48	196.8	1.8

power depending on network voltage (i.e. Q(U)) are possible settings.

5.2.2 AVC Relay

In the field test distribution system the main and the spare transformers are controlled by the same AVC relay in the substation. The AVC relay is quite old of type Siemens V904. However, the main functionalities as adjustments for the voltage deadband, the time delay and limiting the minimum and maximum voltage are on the front panel, see Figure 5.4(a).

Since the Siemens V904 AVC relay is still an analogue device, the voltage setpoint is normally adjusted by a 470 Ω potentiometer shown in Figure 5.4(b). As illustrated it is possible to vary the setpoint between 90 % and 115 % of the nominal voltage. In series with the potentiometer some timer controlled resistances are connected to the AVC relay. This timer controls the additional resistances on daily and weekly base. To obtain a voltage of 10.7 kV at the secondary substation, the potentiometer for the setpoint is set to 107 %.

For the field test the original potentiometer is disconnected by a relay and

(a) Front panel of the AVC relay (b) Potentiometer to adjust AVC relay setpoint

Figure 5.4: AVC relay Siemens V904 as used in the field test substation.

replaced with a resistance network which is switched by relays. The relays are controlled by an Ethernet-I/O unit to obtain a resistance which corresponds to the desired voltage setpoint of the AVC relay. For fall back reasons the relay, which switches between the original potentiometer and the resistance network, is controlled by a watch dog timer, that is triggered by the Ethernet-I/O unit. Thus the switch relay will connect the setpoint preset by the potentiometer when the communication is lost.

5.2.3 Electricity Meters

Electricity meters (EM) are used for voltage measurements at the customer side as proposed in Chapter 3. Within the field test 13 electricity meters of the type EMH LZQJ-XC are operated to collect voltage measurements at the customer side. These meters are three phase connected directly to the low voltage level at 230/400 V. Another twelve meters are used in the field test for collecting other measurement values as voltages, current as well as active and reactive power at some substations. In these cases in which the measurements

are on the 10 kV or 50 kV level, the electricity meters are connected to voltage and current transformers. Figure 5.5 shows one of the meters placed in the field test substation.

Figure 5.5: Electricity meter of type EMH LZQJ-XC which is mainly used in the field test.

A large number of measurement values is available from the electricity meters. Some of them which are used within the field test are the network voltage on all three phases, the line currents, the power factor, the active power and the reactive power. The data transfer protocol to communicate with the electricity meters is either IEC 62056-21 or DLMS. In the field test IEC 62056-21 is used. Since there is no possibility to configure the electricity meters to send the desired measurement values regularly, it is necessary to send a request each time measurement data should be sent.

The electricity meters LZQJ-XC are equipped with an RS485 serial port as well as optical interfaces and can be extended with other plug-in communication modules. These modules are available for PSTN, GSM/GPRS, Ethernet and RS232. All interfaces have additional RS485 ports to interconnect several meters. The data transmission rate of the interfaces is up to 19200 baud.

5.2.4 Communication

To implement coordinated voltage control, as it is proposed in this work, in a field test, many communication links are needed. Thus it is important that the communication links are available at reasonable cost and also quite remote places have to be covered. However, the operation of the network should not depend on these communication links and therefore some interruption could be tolerated from time to time. With these requirements the public mobile telecommunication networks seem to be reasonable to use. Furthermore already today they are often used for the monthly energy measurement readings from the electricity meters at the customer side.

Mainly all communication between the field test equipment is carried out by mobile telecommunication infrastructure. Several ways to set up the communication link have been included. Some of the communication links are GPRS (2G) connections while other already are based on UMTS (3G). Figure 5.6 gives an overview over the communication links for the coordinated voltage control in the field test.

The electricity meters are an important part of the field test equipment and much focus has been put on their communication. Finally two different types of communication setups have been chosen for the meters collecting measurement values close to the customers. Nine of the electricity meters are equipped with GPRS modules and four are equipped with Ethernet modules. For the electricity meters with GPRS modules SIM-cards from a VPN gateway operator have been chosen. Thus their traffic is going to an own access point (APN) in the mobile network and all devices obtain internal IP-addresses within the VPN. From the VPN gateway operator the traffic is tunnelled over VPN to the central control unit. The electricity meters with Ethernet module are connected to UMTS-routers which transfer the measurements

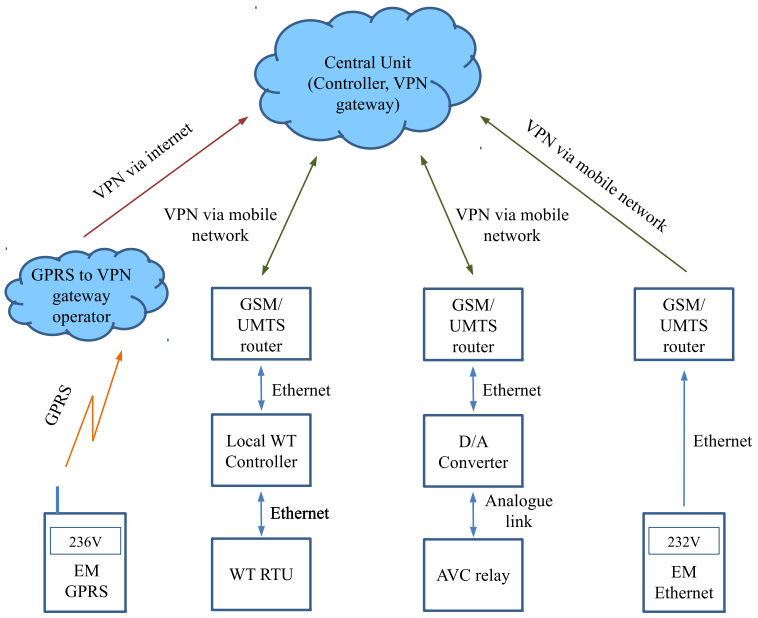

Figure 5.6: Schematic over the communication infrastructure of the coordinated control as used in the field test: electricity meter connected via GPRS and VPN operator (left), local WT controller via VPN over UMTS (second from left), AVC relay via VPN over UMTS (second from right) and electricity meter via VPN over UMTS (right).

via VPN connections to the central control unit. For the electricity meters in the substations most of the connections are based on serial links as RS232 or RS485. In case of RS232 connections they are directly connected to a UMTS-router which is connected to the central control unit by a VPN link. For the RS485 connections in the main substation the meters are connected to RS485-Ethernet converters which are then connected to a UMTS-router and further to the central control unit via VPN. Although the amount of data that is transferred for each request is quite small, the total amount of data which is transferred over one month becomes considerable. For each electricity meter communicating via a GPRS module around 13 MB of data is transferred per

day which is nearly 400 MB a month. However, as the data transmission is somehow continuous the transmission rate does not need to be very high.

All communication to the local controller at the wind turbine and the central control unit goes via VPN over UMTS. At the wind turbine a router is installed to forward the decrypted data to the local wind turbine controller. From this controller the communication to the wind turbine RTU is based on Modbus TCP via Ethernet.

The setpoint of the AVC relay is sent by a VPN-over-UMTS connection to a router at the substation. From the router exists an Ethernet connection to the Ethernet-I/O unit which controls the resistance network. The communication protocol on the Ethernet link is again Modbus TCP.

5.3 Implementation of Coordinated Voltage Control

The aim has been to implement the coordinated voltage control introduced in Chapter 3 in the field test. Nevertheless, due to practical reasons some compromises have to be made. The main issue has been that the whole communication infrastructure and nearly all control units are separated from the existing infrastructure in the distribution network. Furthermore the capacity of controllable DG units is quite limited with only one wind turbine at a rated capacity of $P_{DG,rated} = 800\,\text{kW}$. Nevertheless, the main components for coordinated voltage control have been implemented and the control is modelled as shown in Figure 5.7 which is somewhat limited due to the size of the network.

The network voltage is measured at 15 different places in the field test distribution network. Of these measurements 13 are at the low voltage level and two on the medium voltage level at and close to the wind turbine. These voltage measurements are collected by the central control unit every 10 seconds. The actual minimum and maximum values are then sent to the AVC controller which calculates the deviation from the lower and upper voltage limit and thereby determines the setpoint of the AVC relay. Afterwards the

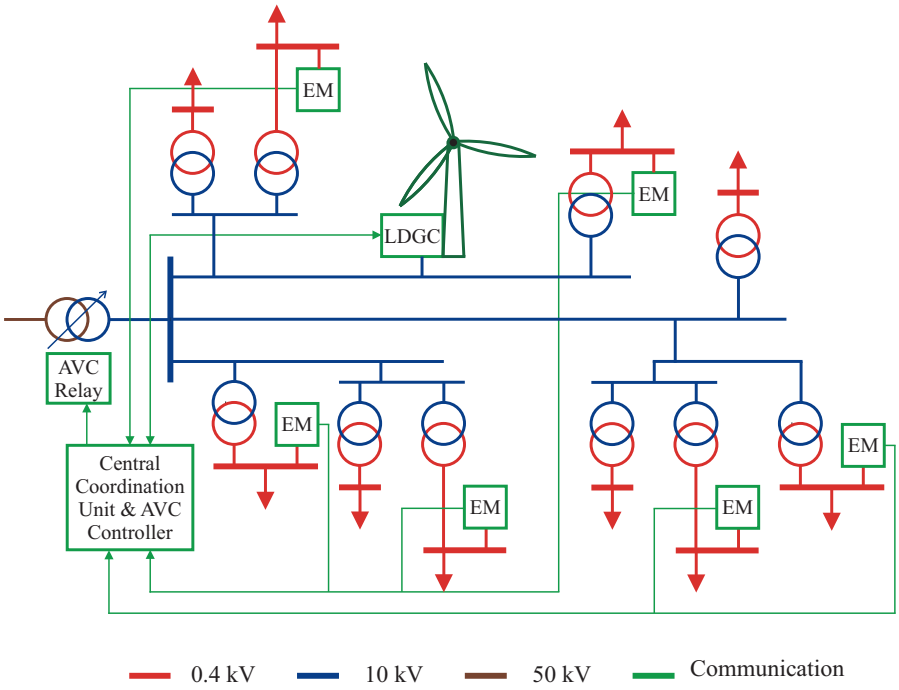

Figure 5.7: Schematic over the implementation of coordinated voltage control as it is in the field test distribution system.

setpoint is sent to the Ethernet-I/O unit in the substation which adjusts the switching of the resistance network according to the desired setpoint. For the wind turbine the setpoints of reactive power consumption and active power curtailment are determined by the local controller placed in the wind turbine. The calculation of the setpoints is based on the local voltage measurements from the wind turbine. The central coordination controller is able to provide a changed voltage setpoint in the local wind turbine controller if necessary. All actual measurements are also sent to the coordination controller.

Notwithstanding coordinated control is introduced in the field test system, some margins for the network voltage are still needed. Thus the voltage limits for the low voltage side have been set to 0.975 pu, corresponding to 390 V, as lower boundary and to 1.045 pu, corresponding to 418 V, as upper boundary. Another limitation, which has been introduced, is the voltage at the PCC

of the wind turbine. There the voltage should not exceed 10.9 kV according to the requirements from the DNO. During the field test the wind turbine is allowed to use its full reactive power capability of 410 kvar to lower the voltage at the PCC.

Because of the practical limitations mentioned earlier in this section, some variations from the original control have been applied. In detail it means that existing communication to electricity meters, which are already installed at the customer side, is not used and as a consequence additional electricity meters have been connected to the 400 V side of 13 secondary substations to get voltage measurements as close to the customers as possible. To identify the substations, where voltage measurements are most relevant, some simulations of the network voltages in the field test area have been done beforehand. However, when choosing the secondary substations also the physical conditions as the available space and the feasibility to connect electricity meters were considered.

Regarding the control of the setpoint of AVC relay there are two issues that have to be mentioned. The on-load tap changer of the main transformer in the 50/10 kV substation has only nine positions and a step size of 2.7 %. For more accurate adjustment it would be desired to have the more common step size 1.67 % with a larger number of positions instead. To reduce the complexity of the equipment and as time is not really a critical issue for the control of the AVC relay setpoint, the AVC controller has been implemented in the central controller and is not located in the substation. Only the processed setpoint is sent to the Ethernet-I/O unit in the substation.

Figure 5.8 provides an overview of the update intervals in the communication links for the measurement data from the electricity meters and the wind turbine and the control signals to the AVC controller and the local DG controller. From the start also the wind turbine setpoints for active and reactive power have been determined remotely by the central controller. Thus the measurement values have been read remotely from the wind turbine, transferred to the central controller where the new setpoints have been calculated and finally the new setpoints have been transferred back to the wind turbine. As a consequence the frequency of setpoint updates has been limited to every 10 seconds which is quite slow compared to the variations in wind speed and

power output. After slightly less than half of the field test period it has been changed and a local controller has been placed directly in the wind turbine. From that time on, the calculation of the setpoints has been done locally and only the desired voltage setpoint has been sent to the wind turbine controller and measurement values as well as control data have been sent to the central controller. Thereby the time period for determining new setpoints has been reduced to 2 s.

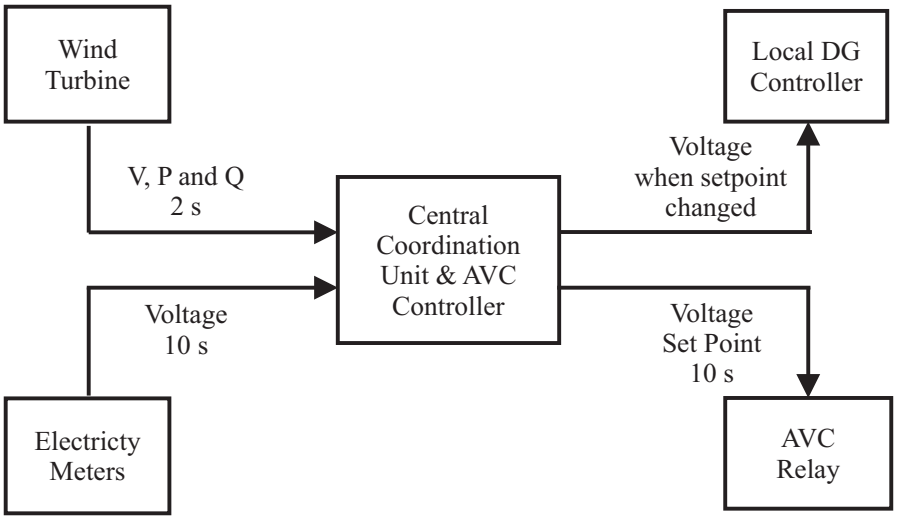

Figure 5.8: Overview over the update intervals of the communication links between the controllers and the equipment in the field test.

For the coordinated voltage control in the field test distribution system some backup is implemented, which is used as a fallback when the communication fails or some of the control equipment fail. The range for the setpoint of the AVC relay is limited physically by the setup of the resistance network which determines the setpoint. A timer monitors the communication between the central controller and the local Ethernet-I/O unit in the substation. If the communication fails, the Ethernet-I/O unit will release a relay to switch back to the primary potentiometer and the base setpoint of 107 %, which is 10.7 kV. The communication between the local controller in the wind turbine and the wind turbine is monitored as well. When there is no alive signal from the local controller, the wind turbine continues operating at the recent operation

point and the control center of the wind turbine supplier is informed. Also the measurement values from the electricity meters are monitored. Too old and unreasonable values are ignored and not considered when sending to the AVC controller. Thus the control is also working when some of the meters fail and do not deliver actual measurement values.

5.4 Evaluation of Data

In this section a closer look is taken at the data received from the field test. The focus is on the control of the setpoint of the AVC relay for the OLTC at the substation transformer and the control of the active and reactive power from the wind turbine. Figure 5.9 shows the active and reactive power flow through the substation transformer for two different weeks. The first five days are workdays and the last two days are the weekend. As there is an industrial customer connected to the distribution network, the difference in maximum load between workdays and the weekend is quite considerable. While the active power flow during winter weekdays is up to 7.5 MW, it is around 4 MW to 5 MW during the weekend. In the summer week, the corresponding load on weekdays is slightly more than 5 MW and between 3 MW and 4MW during the weekend. The larger variations in the active power flow during day 2 and day 4 in the summer week is caused by large wind power production. However, the power injection from the wind turbine is not enough to reverse the active power flow through the substation transformer. The reactive power flow follows mainly the active power flow but varies only between roughly −0.5 Mvar and 2 Mvar. Thus, the reactive power flow is reversed during some low load periods. During some nights in the summer week (e.g. at the beginning of day 2 and day 3), the reactive power flow seems to oscillate around zero, which is probably caused by some error in the angle measurements.

5.4.1 Voltage Measurements and AVC Controller

To evaluate the control of the AVC relay setpoint, Figure 5.10 depicts some important key variables over a week in June 2013 starting at midnight of day

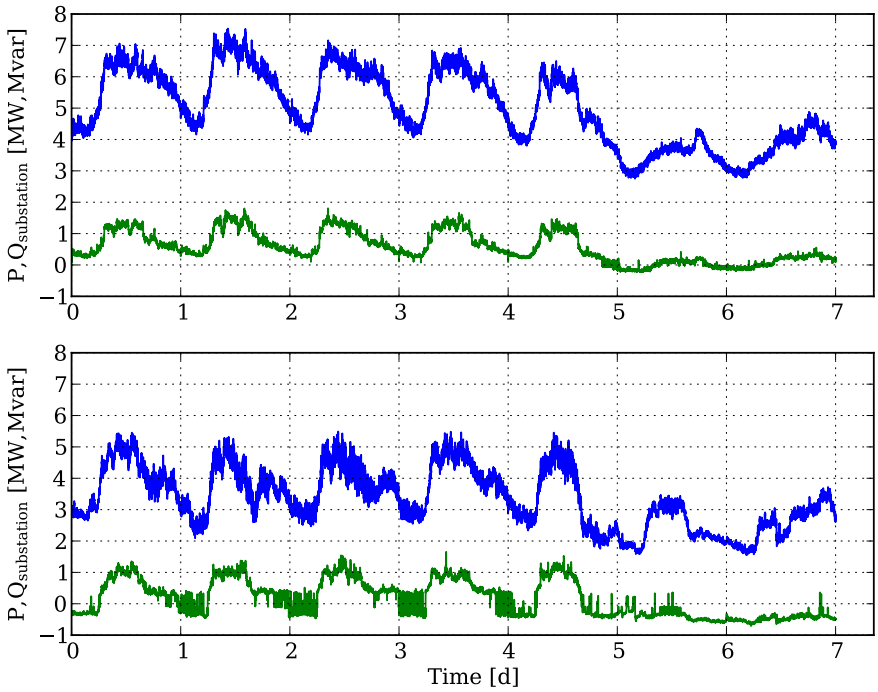

Figure 5.9: Active (blue line) and reactive (green line) power flow through the substation transformer over one week in February 2013 (upper subfigure) and one week in May/June 2013 (lower subfigure).

0. In the upper subfigure minimum and maximum voltage at the secondary substations on the 0.4 kV level are shown. The second subfigure from the top depicts the AVC setpoint and the tap changer position. Below are the voltages at the substation and at the wind turbine each at the 10 kV voltage level (third subfigure from top) and the voltage at the feeding 50 kV level (lowermost subfigure).

The two red horizontal lines in the upper subfigure of Figure 5.10 indicate the lower and upper voltage level which have been set for the controller. When the maximum voltage at the secondary substations (green line in upper subfigure) or the voltage at the wind turbine (green line in third subfigure) reaches the upper limit of the controller, the setpoint for the AVC relay (green line in

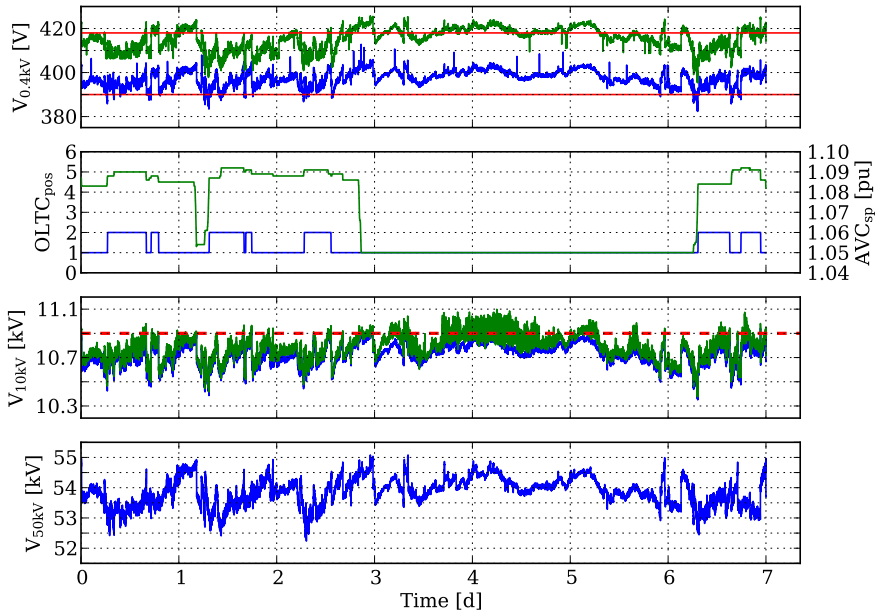

Figure 5.10: Minimum (blue line) and maximum voltage (green line) at the secondary substations on the 0.4 kV level with red lines indicating the lower and upper voltage boundary (upper subfigure), setpoint for the AVC relay and tap changer position (second subfigure from top), voltage at substation and at the wind turbine each at the 10 kV level with red line indicating upper voltage boundary at wind turbine connection point (third subfigure from top) and voltage at the overlying 50 kV level (lowermost subfigure) over one week starting at midnight of day 0.

second subfigure) is reduced and finally the on-load tap changer performs an operation as it can be found in the second half of day 0 and in the middle of day 2. Unfortunately the voltage level on the overlying 50 kV network is quite high during some time and especially during day 3 to 6. Thus it is not always possible to lower the tap changer position for reducing the voltage on the 10 kV and 0.4 kV level, even though it would be beneficial (e.g. at the beginning of day 1 and the night between days 2 and 3). During the night between day 0 and day 1 and between day 2 and day 3 for example the voltage at the substation is already as high as the chosen maximum voltage at the wind

turbine connection point (10.9 kV), although the tap changer is at its lowest position.

For the minimum (blue line in upper subfigure) voltage the situation is more comfortable as there is always the possibility for voltage increases by the on-load tap changer without reaching its end position. For example in the morning hours of days 0 to 2 and 6 the voltage at the 0.4 kV level decreases and thus the setpoint for the AVC relay is raised by the controller and finally the on-load tap changer performs a step to a higher position. At day 1 and 6 this takes a while as the setpoint voltage for the AVC relay has reached its lower limit of 1.05 pu during the night since the tap changer has been at its limit and thus not been able to follow the setpoint.

In Figure 5.11 again the minimum (blue line in upper subfigure) and maximum voltage (green line in upper subfigure) of all measured voltages at the secondary substations are shown. Notwithstanding the voltages are sometimes slightly outside the boundaries set in the controller (dashed red lines in upper subfigure), due to reasons mentioned above, there are still large margins to the lower and upper voltage limits according to the standard EN 50160 which allows voltage variations of $\pm 10\,\%$ from the nominal voltage indicated by the solid red lines in the upper subfigure.

The difference between the actual maximum and actual minimum voltage, that is the used voltage band, is shown in the lower subfigure of Figure 5.11. The voltage difference between the secondary substations varies essentially between 10 V and 20 V but presuming the voltage limits from EN 50160 (i.e. $U_{min} = 360\,\mathrm{V}$ and $U_{max} = 440\,\mathrm{V}$) the maximum voltage range is 80 V. Compared to that fact, the used voltage band is quite narrow and therefore voltage control by the on-load tap changer should be able to move the whole voltage band without violating the voltage limits. However, it has to be considered, that the voltage decrease from the secondary substations to the customer connection points is not included here. Thus the totally used voltage band is in fact higher.

For voltage measurements close to the customers electricity meters have been installed on the low voltage side of 13 10/0.4 kV substations in the field test area. To select the substations with the largest voltage variations, simulations

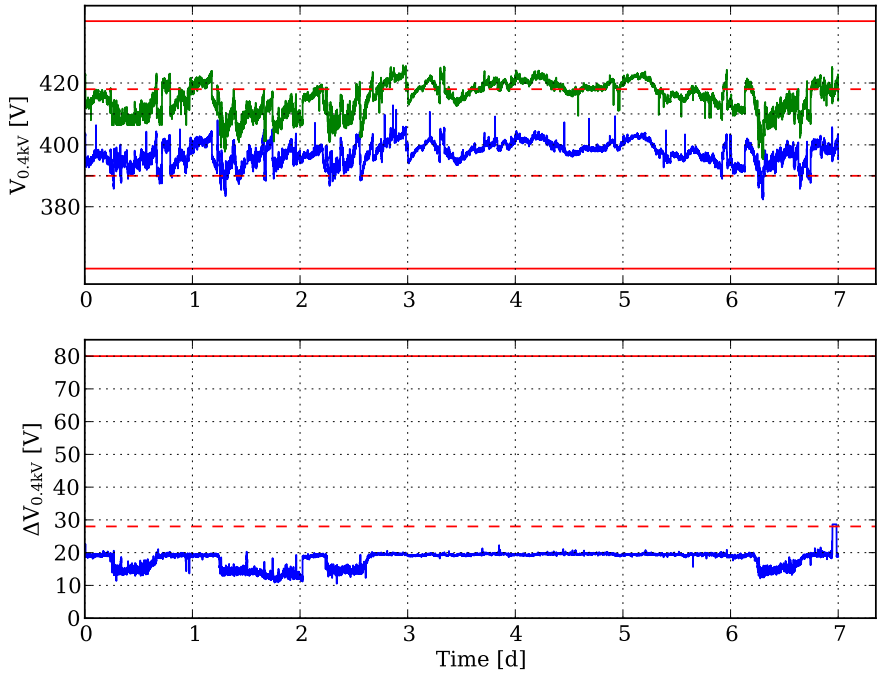

Figure 5.11: Minimum and maximum voltage on the 0.4 kV level at the secondary substations (upper subfigure) and used voltage band (difference of highest and lowest voltage). Dashed red lines to indicate the setpoints of the controller and solid red lines indicating limits according to EN 50160.

with the network data and expected load have been performed beforehand. Figure 5.12 shows how often the chosen electricity meters have been exposed to the actual minimum (blue bars) or maximum (green bars) voltage respectively during the first half of 2013. The lowest voltage occurs to 80 % of the time at electricity meter EM7. Only two other meters contribute to the minimum voltage with more than five percent: EM11 (8 %) and EM12 (7 %). For the upper voltage the distribution is only a little bit different. Still the largest percentage is at meter EM5 where the highest voltage occurs during 66 % of the time, followed by meter EM2 with 23 % of the time. Meter EM6 is the only other one with the highest voltage during more than five percent of the time. The lowest and highest voltage in the network seem to by very constant

located in this network. Most of the time minimum and maximum voltage occur at two substations in a residential area. However, during some periods maximum voltage appear at a rural substation at the end of the feeder where the wind turbine is connected.

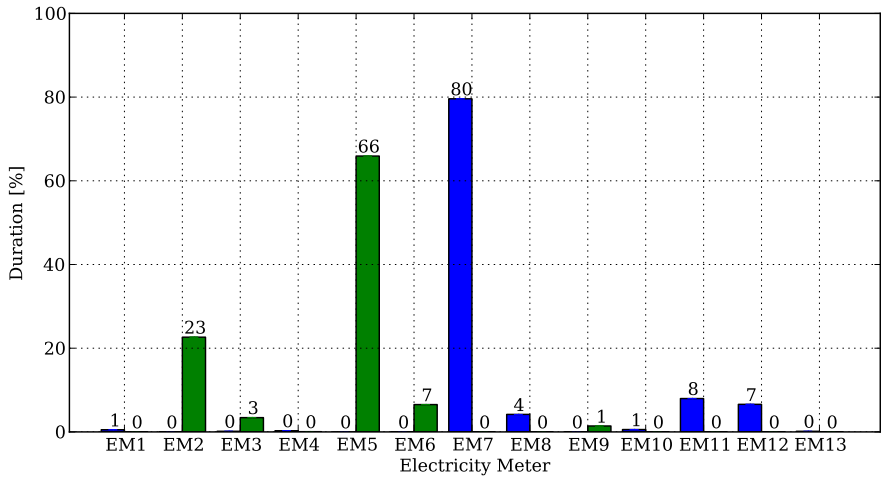

Figure 5.12: Percentage of minimum (blue bars) and maximum (green bars) voltage for each of the electricity meters placed at the secondary substations to gather the actual network voltages as close to the customers as possible.

5.4.2 Wind Turbine Active and Reactive Power and Voltage

The wind turbine contributes to voltage control by reactive power consumption and active power curtailment. Figure 5.13 shows the active power output from the wind turbine (blue line in upper subfigure), its reactive power consumption (green line in upper subfigure) and the voltage at the wind turbine connection point (blue line in lower subfigure) during the same week in June 2013. The red line at 10.9 kV in the lower subfigure indicates the maximum voltage that should be kept at the wind turbine connection point.

During day 0 and day 1 there is some generation from the wind turbine which

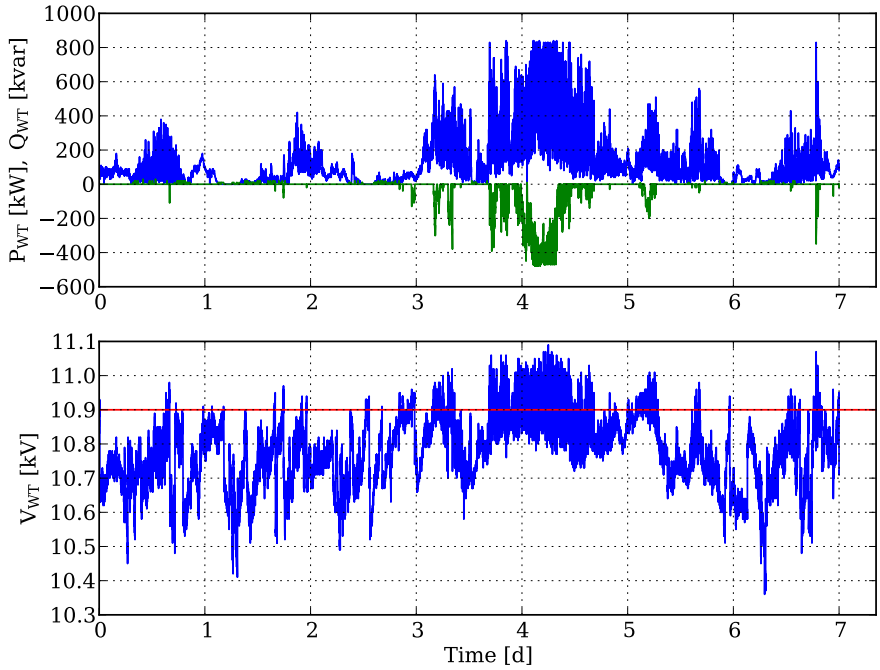

Figure 5.13: Energy from active power generated (blue line) and reactive power consumed (green line) by the wind turbine during one week in June 2013 (upper subfigure) and corresponding voltage at the PCC (lower subfigure).

is up to 400 kW and thus corresponding to half of the wind turbine rated power. Due to a comparatively low voltage level at the substation the voltage at the wind turbine connection point is still below 10.9 kV and nearly no reactive power consumption is needed. However, at the end of day 3 and during day 4 the generation from the wind turbine is excessive and, in contrast to the previous cases, the voltage level at the substation is already close to or at 10.9 kV. Thus at the wind turbine connection point the voltage limit is reached and the wind turbine consumes reactive power to reduce the voltage up to slightly more than 400 kvar which is the maximum reactive power capability. Nevertheless, due to the high voltage level at the substation, the low load and the fact that active power curtailment has been deactivated during the shown period, the voltage at the wind turbine connection point exceeds

the desired limits. However, the voltage control works as expected and reactive power consumption is applied when necessary, although the result is not really as desired because of the external conditions leading to this network situation.

In Figure 5.14 the generated active and consumed reactive power is shown. As it could be expected the generation from the wind turbine is varying over the months. While there has only been comparatively low active power generation in February (94 MWh) and June (85 MWh) the generation in March has been a lot higher with 170 MWh. Probably there should be a correlation between the active power output and needed amount of reactive power consumption to limit the voltage at the wind turbine connection point. However,

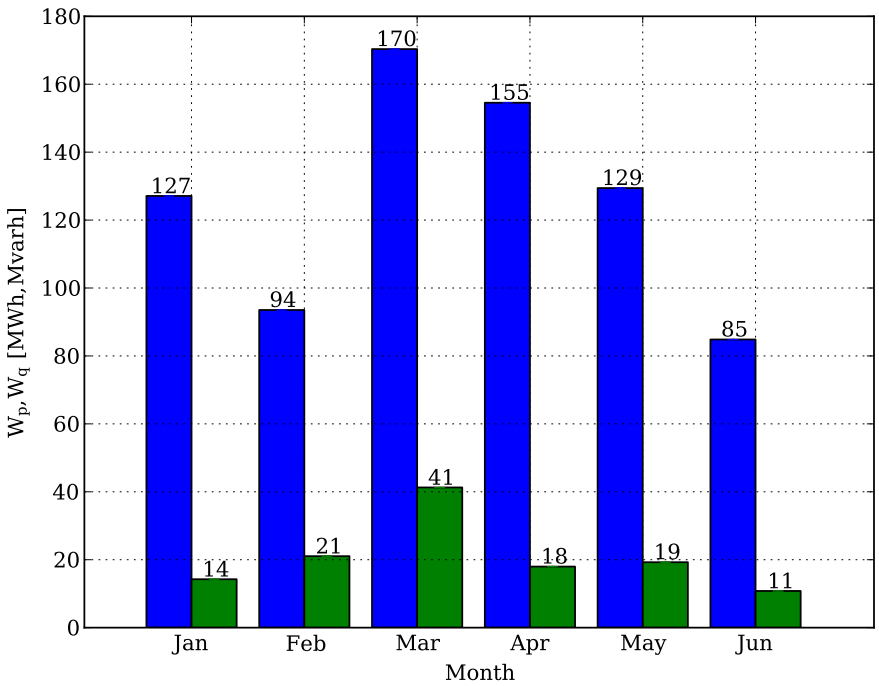

Figure 5.14: Active power generated (blue bars) and reactive power consumed (green bars) by the wind turbine during the first six month of the year 2013.

as seen before the total network situation varies also over the months, which

means that an increase in active power generation not necessarily has to be followed by an increase of reactive power consumption. In the beginning of April the local control has been changed, which has reduced the delay between the voltage measurement and the application of new setpoints for active and reactive power. At the same time the control interval has been decreased from 10 s to 2 s. That could to some extent explain the reduction of reactive power consumption in April and later. In total the wind turbine generated 760 MWh from January 2013 until June 2013. During the same period, 125 Mvarh reactive power have been consumed to control the voltage at the connection point.

The reactive power consumed by the wind turbine has to be provided from somewhere. Therefore, it is necessary to have a look at the total reactive power situation on the feeder where the wind turbine is connected and on the total reactive power flow in the substation. But also the direction of the active power flow is of interest, if distributed generation is feeding in active power. Figure 5.15 indicates the active (blue line) and reactive (green line) power flow through the substation transformer in the upper subfigure and in the feeder, to which the wind turbine is connected, in the lower subfigure over the same week in June 2013 as before.

The total active power flow is during the whole shown period from the overlying 50 kV network to the distribution network. Hence, the wind turbine is not large enough to reverse the power flow through the substation transformer. Nevertheless during day 5 the total power transfer to the distribution system is temporary below 1 MW (blue line in upper subfigure). However, for the feeder where the wind turbine is connected, the situation is different. While the total consumption in this feeder during periods with low wind power production is around 0.15 MW as indicated by the blue line in the lower subfigure, the surplus during times with high wind power generation is up to 0.7 MW (blue line in lower subfigure at the beginning of day 5). Consequently the wind turbine reverses the power flow in the feeder quite clearly.

While the substation has a surplus of reactive power which is exported to the overlying network during low load situations (e.g. during the nights and from day 3 to day 5) of about 0.5 Mvar, reactive power up to around 1 Mvar

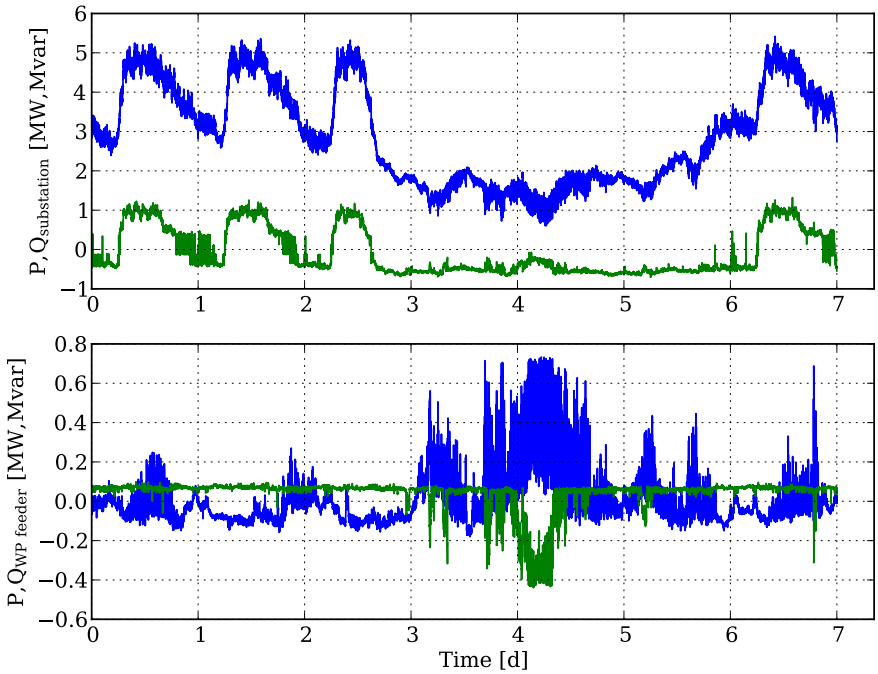

Figure 5.15: Active (blue line) and reactive (green line) power flow through the substation transformer (upper subfigure) and in the feeder where the wind turbine is connected (lower subfigure). Positive sign means power flows to the 10 kV substation busbar.

is imported under higher load conditions (i.e. daytime day 0 to day 2). The feeder to which the wind turbine is connected has normally also a surplus of reactive power of about 0.08 Mvar and contributes to the reactive power surplus of the total distribution network during low load conditions. However, since the wind turbine is able to absorb more than 0.4 Mvar reactive power for voltage control, the reactive power flow is often reversed and the feeder absorbs reactive power from the substation up to 0.4 Mvar (green line in lower subfigure at day 5).

The estimated benefits of implementing coordinated voltage control in the field test system are shown in Figure 5.16. During the period January 2013 to June 2013 around 8 % of the available wind power needed to be curtailed to

maintain the upper voltage limit (green bar). If the DG would have been operated at unity power factor, the curtailment would have been about 22 % (blue bar). With only active power curtailment for voltage control, the curtailment would increase to roughly 26 % (red bar). The benefit from a variable setpoint of the AVC relay is probably less than it could have been, if the OLTC would not have been in the end position during some time.

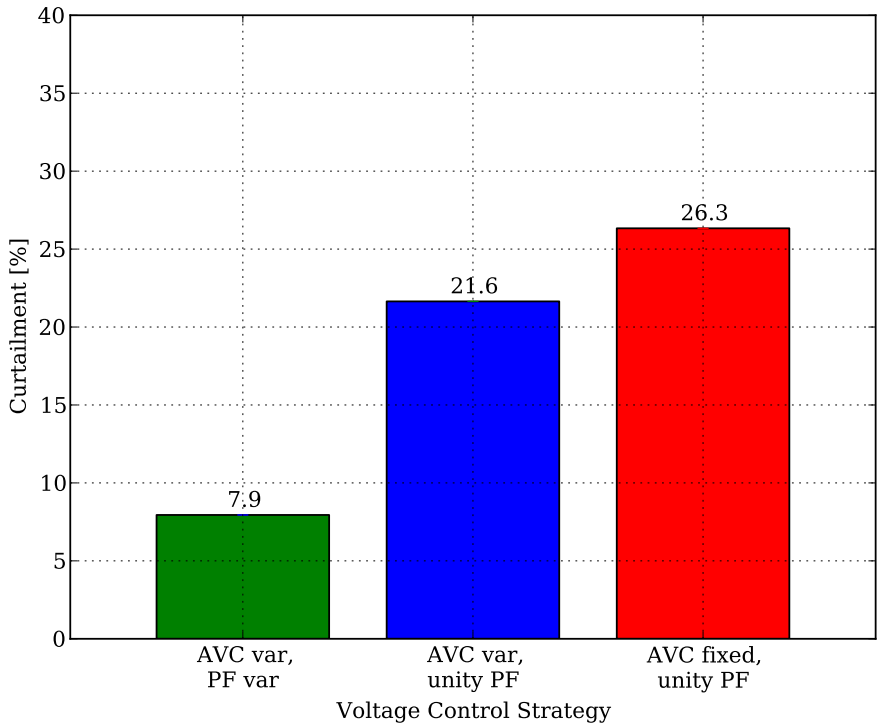

Figure 5.16: Active power curtailment of the wind turbine in the field test system for different voltage control strategies (green bar: AVC setpoint variable and DG variable power factor (curtailment based on measured data), blue bar: AVC setpoint variable and DG unity power factor (curtailment calculated with assumptions), red bar: AVC setpoint fixed and DG unity power factor (curtailment calculated with assumptions)).

The percentage of active power curtailment with a variable AVC setpoint and a variable power factor of the DG unit is the most exact of the shown values since it is basically based on measured values. Notwithstanding, active power curtailment has not been activated during most of the time due to financial causes, it is straight forward to determine subsequently. By calculating the benefit from the reactive power consumption and subtracting it, the curtailment for a variable AVC setpoint and unity power factor from the wind turbine can be determined easily, too. However, retroactive estimating the tap changer position for a fixed setpoint of the AVC from the measured data is more uncertain. Especially due to the fact that the on-load tap changer step size is 2.7 %, i.e. about 290 V, and the voltage rise from 800 kW at the wind turbine connection point is 310 V, estimating a one step deviating tap changer position can have a large impact on the amount of curtailment. So, the voltage change from one tap changer step corresponds almost to the nominal DG output. Therefore the curtailment for a fixed AVC setpoint is rather an approximation.

5.4.3 Asynchronous Measurement Data

Asynchronous measurement values obtained from the electricity meters have been one of the main issues to study within the field test. The electricity meters used in the field test are not able to send their measurement values by themselves without a request. Thus the central controller sends a request for the desired values to each electricity meter every 10 seconds. As there is an individual communication link for each meter, the requested data will not necessarily arrive at the central control simultaneously and the values used as input for the controller are often not sampled simultaneously.

Figure 5.17 shows the delay for the requested data from the different electricity meters in the field test during one minute. As depicted the values arrive at the central controller between 2 s and 6 s after that the request has been sent by the central controller. The time delay varies both between the different electricity meters but also for each meter from one request to another.

Figure 5.18 shows the mean time delay and the standard derivation for the time from the request sent by the central controller until the data is saved for

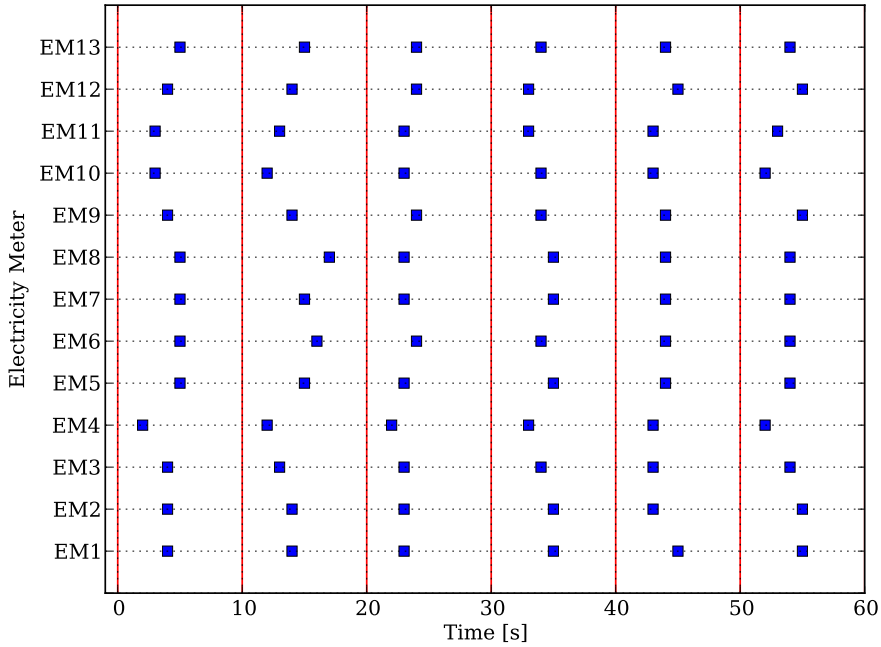

Figure 5.17: Time from the request sent to the electricity meters from the central controller (red vertical line) until the measurement values are arriving at the central controller.

each electricity meter in March 2013. For most of the meters the mean time between the requests and the obtained values is 4.0 s to 4.5 s. All these meters are communicating via a plug-in GPRS modem and the VPN operator. Four electricity meters (EM3, EM4, EM10, EM11) have a shorter time delay of 3.0 s to 3.5 s. These meters are connected to a VPN router via an Ethernet module. Hence, the choice of the communication link has an impact on the time delay to obtain measurement values from the electricity meters.

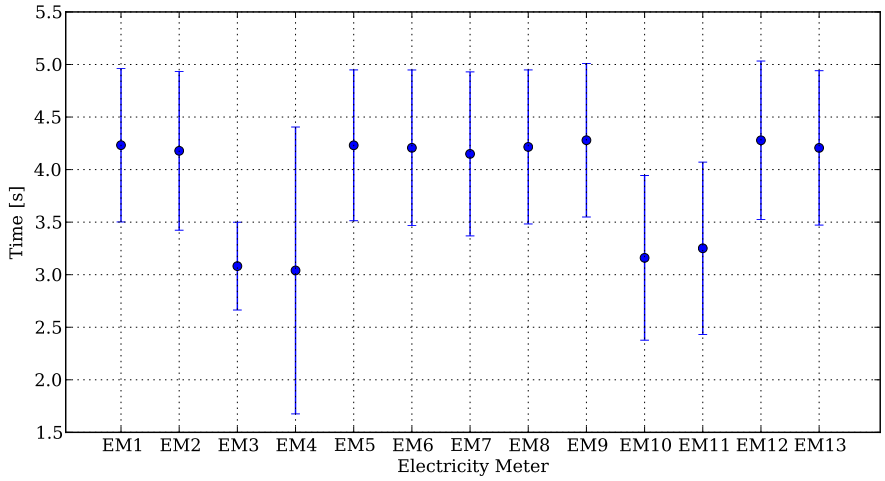

Figure 5.18: Mean time delay and standard derivation for each electricity meter at the secondary substations in March 2013.

5.5 Summary

As already shown in the previous section the preconditions, especially the voltage in the overlying 50 kV network, have brought the voltage control to its limits. Nevertheless, in the field test it has been demonstrated that coordinated voltage control can be implemented in existing distribution systems and improve the voltage situation when DG is connected. But still there is some space for improvements for future implementations. The need for active power curtailment has been decreased considerably compared to the a fixed setpoint of the AVC and unity power factor from the DG unit.

Both the reactive power consumption at the wind turbine but also the variable setpoint of the AVC relay have been successfully used to limit the network voltage. The reactive power output could be adjusted quite well especially in situations with rather constant wind speed. In situations with large variations in the wind speed, the reactive power consumption has not always been able to follow the voltage variations caused by the variations in active power output as fast as desired. But as the wind often varies a lot during periods

with high wind speeds, the reactive power consumption has been on an accurate level anyway. This behaviour could be optimised by tuning the P and I parameters of the DG controller or by decreasing the cycle time for the DG controller. Regarding the variable setpoint of the AVC relay it turned out that the voltage level in the substation area could often be adjusted to a lower level to increase the available voltage band for the DG unit. Unfortunately one secondary substation area usually has a voltage significantly deviating from the other secondary substations thus increasing the used voltage band.

The voltage level at the 50 kV network, which is supplying the field test distribution network, has often been high during low load situations in summertime. Thus the on-load tap changer reached its end position without reaching the transformer ratio which would be necessary to maintain the voltage in the desired range. In consequence the voltage at the secondary side busbar in the substation has been exceeding the upper voltage limit for the wind turbine connection point. This problem will be solved in the future as the substation is under reconstruction and the transformer will be replaced. The new transformer has a different turns ratio and the OLTC has a wider control range.

It has been shown that it is possible to request measurement readings from existing electricity meters with an interval of 10 s by radio communication via the public mobile network. The transferred amount of data turned out to be around 13 MB/(d·EM) for meters connected via the VPN operator and 19 MB/(d·EM) for the meters connected via router and VPN. Thus the average data rate for each electricity meter is very roughly 1.3 kbit/s and 1.9 kbit/s respectively. However, the electricity meters have not really been designed for continuous reading and thus the protocol overhead is not optimized for this application. So, regarding the communication improvements are still possible.

The time delay between the request and the arrival of the measurement data from the electricity meter at the central controller turned out to be usually between 3 s and 5 s in average depending on the type of communication link. Hence, the time delay seems not to be critical for the control. For both types of communication links, that were used in the field test, the time delay has been less than the cycle time applied for the AVC controller and clearly less than the time delay for the tap changer operations in the AVC relay. Reduc-

ing the protocol overhead would also reduce the delay in some manner but most of the delay is probably caused by the response time over the wireless communication link in the mobile network.

Chapter 6

Distribution Network Planning

Traditionally, distribution networks have been planned and built to transfer power from the transmission network to the customer connection points and supply the connected loads. Thus the dimensioning criteria have been based on assumptions which allow planning of cost effective distribution networks fulfilling the demands for load supply. When a noticeable amount of DG is connected to distribution systems, the requirements will change and therefore the traditional assumptions are not necessarily leading to efficient distribution networks in the future. An increasing connection of DG will probably change the criteria for the planning of distribution systems in the next years.

6.1 Introduction to Network Planning

For the overall planning of electricity distribution systems several regulations, guidelines and recommendations are available. The regulations may vary between different countries and some may be mandatory in one country and at the same recommendations in another. Furthermore the details of the regulations are varying. This leads to different solutions for the network design. As network design has to combine engineering and economics, in some cases slight deviations from the settled planning levels may be accepted to obtain an overall good solution. Since the lifetime for distribution systems or at least for some of the components is up to 40-50 years, it is important to consider long term development trends [54]. In this work the focus is not on regulations and network safety but on the network design regarding voltage control,

thermal capacity limits and network losses.

6.1.1 Requirements for Distribution Systems

Distribution systems have to meet several requirements for a reliable operation. The most important demands are linked to safety through fault clearing and to the network voltage. The fault clearing system should be able to handle several kind of faults in such a way that safety risks are limited and no other equipment is damaged when one or more components in the fault clearing system fail. As electrical devices are normally constructed to operate within some specified voltage range, the network voltage has to be within certain limits to allow the connection of loads without the risk for damaging the connected devices [12, 13]. Already in the planning stage for a distribution network fault clearing and voltage variations have to be considered to ensure the network is able to fulfil the requirements. Moreover the components in the distribution system must of course be dimensioned to continuously carry the currents drawn by the loads.

While the previous requirements are quite clear and strictly there are other requirements which are less strictly defined. Probably it is preferred to keep the losses in the network low, which can be achieved by choosing lines with large cross section areas. At the same time the costs for the network should be low as well, which contradicts the use of lines with large cross section areas. Thus a trade-off between losses and network costs is needed.

6.1.2 Limiting Components

For network planning it is important to identify the limiting components. As discussed in Chapter 2 the capacity of a network can be limited by voltage limits, thermal limits and network losses. All three limitations have to be considered during the network planning. In the system there are mainly two typical components to which these limits apply: transformers and lines.

Other limitations that have to be considered are for example the short circuit

strength of components (e.g. busbars) and backup supply. These limitations are out of scope of this work and they will not be discussed here in detail, even though they could become a limiting factor for the connection of DG as well. The focus in this section is on transformers and lines/cables.

Transformers

The substation transformers are limiting the maximum power that can be transferred through a substation to the customer connection points in the underlying distribution network. Normally the heat losses and thus the transformer heating is the limiting factor.

The lifetime of a transformer is determined by the deterioration of the insulation which increases at high temperatures. Therefore it is important not to overload the transformer during longer time periods. The effective maximum loading of each transformer is depending on the load cycle and the ambient temperature [54]. Often transformers are constructed to withstand overload up to 140 % of the nominal capacity during winter time or up to 130 % during summer time. If these limits should be exploited, cooling periods as originating by cycled loading e.g. from residential loads are already assumed.

Lines

Lines can be the limiting components in distribution networks regarding several criteria. A strict and straightforward criterion for the transfer capacity of lines is the thermal limit. But also the voltage variation over the line increases with increasing line length and power transfer. Hence the voltage variation along the feeder may become another dimensioning criterion. In practice network losses are also a limiting factor for the economical transfer capacity of a line. However, the network losses are a rather soft criterion, but it is difficult to define a hard limit. If overhead lines are dimensioned on an economic basis for load supply, there is normally a large margin between the maximum power transfer and the thermal line limits. In particular the distribution of the

load along a line is crucial for determining if the line limit is based on losses or on the voltage variation. For underground cables the thermal limit during backup connections may become a dimensioning factor as well [54].

6.1.3 Traditional Network Design Rules

For many years the main requirement, that distribution systems had to fulfil, has been the supply of connected loads. Thus the traditional design rules focus on good practice network design for load supply. This section will take a closer look at how distribution networks are traditionally designed regarding the transformer capacity and the line conductor size with respect to the maximum transfer capacity, the voltage control and the network losses. In [69] three basic design rules for distribution feeders are identified:

- The ampacity of the feeder should at least be as high as the current during maximum load.
- The upper voltage limit should not be exceeded for any customer.
- The lower voltage limit should not be exceeded for any customer.

The design rules for distribution networks are set up to satisfy the requirements under all operation conditions including the worst case which traditionally is the maximum load case. The lines are loaded most during maximum load periods and therefore both the network losses and the voltage decrease are largest at that time. Hence, from the voltage decrease perspective the maximum load case will be the essential factor for the selection of the line conductor size. However, for the losses that is not as obvious since it is rather the average (squared) current which is deciding. Dimension rules can be based on standards that have to be fulfilled as for example regarding the voltage variations. When networks are planned it has to be assured that the voltage fulfils the standards and recommendations set up by authorities. But also security of supply and network losses are dimensioning criteria. In general the first steps are considering the technical network design rules as the voltage variations, an appropriate maximum capacity but also the fault level requirements. Accordingly the size of the components, e.g. transformer

capacity and line conductor size, can be chosen according to economical factors.

As voltage quality requirements are specified for customer connection points, only a fraction of the total available voltage range for load supply can be used in each part of the distribution network. Often a specific voltage variation is allocated to each voltage level. Thus the voltage variation along a line becomes an even more important constraint for the design of medium voltage distribution systems with overhead lines [54]. To maintain the voltage in a distribution network, the voltage variation itself is important but also the voltage at the secondary side of the HV/MV substation should be considered. In addition the voltage at the customer connection points varies with the actual network loading and the location of the connection points in the network. To be able to guarantee an acceptable voltage at all customer connection points, the voltage variation between the connection points has to be limited. Thus a flat voltage profile along the feeders but also between the feeders is desired.

During the planning stage the line dimensions are typically chosen according to an economical size which also includes the line losses over their lifetime. In literature a tendency of increasing costs for losses and decreasing cost for installation of transfer capacity (i.e. low cable prices) is identified [2]. To determine the type of line which is needed to fulfil the economical dimension criteria, it is necessary to consider parameters as the increase in energy consumption, the lifetime of lines, the increase in prices of equipment, the interest rate and the level of utilisation. A rule of thumb assumes a current density of not more than $1\,\mathrm{A/mm^2}$ as economical dimension for aluminium cables and $2\,\mathrm{A/mm^2}$ for cables with copper conductors [63]. But also other criteria have to be considered. Network operators often only want to use a limited number of conductor sizes in their network and the selections of components close to their limits could restrict the possibilities for later network upgrades. Especially in the case of underground cables the costs for the cable installation are normally much higher than the cable costs itself. Therefore a slightly oversized conductor size is often preferred and does not compromise the economics but implies reserves for a future increase in power transfer.

6.1.4 Aspects of Dimensioning with DG

With DG connected to the distribution network some of the assumptions valid for pure load networks will change. Before the network loading has been quite predictable from experience over many years. But with DG units especially for the ones with generation from intermittent sources, the generation can not be described in a deterministic way as for large traditional power plants but is rather probabilistic. Thus the power flow in the network is more uncertain. The generation profile for these generation units is not the same as for loads and thus the pattern of the total power transfer in the network will change. This may imply a reduced or even reversed power flow in feeders where load and generation are connected together. Because of reversed power flows also a voltage rise, which has not been an issue before, has to be considered when planning distribution networks with generation. If the generation capacity is higher than the maximum load, the maximum loading of the line may be increased by a reversed power flow during some periods as well.

In contrast to traditional load connection it might be acceptable today to have restrictions on the connection for the generation units. These restrictions could be tolerated if their occurrence and extent are rare and thereby a faster and less cost intensive connection of the generation units is possible. In future applications also load connections with restrictions might be considered if the utilisation of loads could be shifted in time without affecting the user comfort.

Since the peak capacity for generation from intermittent sources is often only reached during some few hours per year, it could be reasonable to accept higher losses during these periods. Therefore other assumptions regarding economical design might be used than in the case with pure load. For combined load and generation feeders the change for the economical dimensioning probably also applies, since the probability for maximum load is reduced. As a consequence the relationship between the line utilisation and the yearly losses is no longer the same as before.

In networks with load and generation it is harder to predict the voltage at all network nodes and probably the available voltage band will be used more

extensively. In feeders without generation still the same voltage decrease has to be assumed. But in other feeders the voltage variation might be reduced or even inverted and thus the difference between various feeders will increase. Instead of using lines with larger conductor sizes to reduce the voltage variation, other methods for active voltage control are an alternative to maintain the voltage within the limits.

To summarize, generation in distribution networks has an effect on the existing design criteria. Especially regarding the voltage variation the situation becomes more complex to predict. The network losses will probably both decrease and increase depending on the actual network and even the network situation. As the availability of the DG capacity from intermittent sources is uncertain, the planning for maximum capacity will probably remain unchanged as far as the DG capacity is not significantly larger than the installed load or correlates with peak load.

6.1.5 Example for DG Capacity Limit due to Voltage Rise

With recent network planning for distribution systems and the long term voltage variation criteria applied in many countries, the voltage rise caused by DG units often becomes a limiting factor for the integration of DG into existing distribution networks. The following example illustrates the DG capacity limits for a simple medium voltage distribution if the current industry rules are applied.

Figure 6.1 shows a medium voltage feeder connected to a substation with OLTC transformer. A DG unit with a nominal output of 1.5 MW, corresponding to 1.5 pu with $S_{base} = 1\,\text{MVA}$, should be connected to the feeder where also load is connected, whereby the long term voltage variations should be limited to 2.5 % according to the current guidelines [64]. On pure generation feeders however a maximum long term voltage variation of 5 % is acceptable. In addition to the voltage rise caused by the active and reactive power transfer the dead band of the OLTC should be considered for the voltage variation, too. In (6.1) the equation for determining the voltage variations introduced by

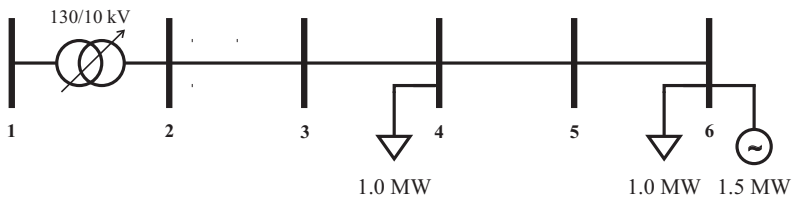

Figure 6.1: Mixed medium voltage feeder with load and DG connected to a substation with OLTC transformer.

the dead band of the OLTC is shown.

$$V_{db} = \frac{V_{stepsize} \cdot 1.2}{2} = \frac{0.0167 \cdot 1.2}{2} = 0.01 \widehat{=} 1.0\,\% \tag{6.1}$$

So for an on-load tap changer with a common step size of 1.67 % and a dead band of 20 percent, the possible suboptimal tap position may be treated as additional voltage variations of 1.0 %. This value has to be added to the voltage rise caused by the power transfer. The Thévenin equivalent short circuit impedance at the connection point for the load and DG unit is $Z_{SC} = (0.0256 + \mathrm{j}0.0188)\,\mathrm{pu}$. According to the simplified equation as in (6.2) for calculation of the voltage rise at the DG connection point, the voltage variation at the connection point would be 3.8 % if the DG unit is operated at unity power factor.

$$\frac{\Delta V_{DG}}{V_1} = \frac{RP + XQ}{V_1^2} = \frac{0.0256 \cdot 1.5}{1^2} = 0.038 \widehat{=} 3.8\,\% \tag{6.2}$$

For the considered DG unit size and the assumed OLTC transformer the total voltage variations at the connection point would be $\Delta U = U_{db} + \Delta U_{DG} = 0.048\,\mathrm{pu} \widehat{=} 4.8\,\%$. Thus, according to the recent connection recommendations, the DG unit should not be connected to a mixed feeder without additional measures even though there is probably quite a good margin during most of the time. In this case a new feeder would probably be built. An alternative could be to use lines with a larger cross section area to reduce the voltage rise along the feeder. Consuming reactive power could also be used to reduce the voltage rise to the recommended limit of 2.5 %. In that case (6.3) shows how to determine the needed reactive power consumption.

$$Q = \frac{\Delta V V_1}{X} = \frac{(0.048 - 0.025) \cdot 1}{0.0188} = 1.22\,\mathrm{pu} \widehat{=} 1.22\,\mathrm{Mvar} \tag{6.3}$$

To keep the voltage variations within the desired limit of 2.5 % the DG unit in the example has to be able to consume 1.22 Mvar reactive power but reactive power exchange is usually not desired according to the current connection rules.

6.2 Automation versus Network Reinforcement

To overcome the capacity limits for the connection of DG in distribution networks, investing in control and thereby obtaining more active distribution networks is a solution. In many cases this will be faster to integrate and more cost efficient than continuing with network planning according to worst case scenarios and the fit-and-forget strategy. At some point physical network reinforcement will be needed anyway but by introducing control to the distribution system it can often be postponed to a higher DG penetration level.

When DG units are connected to existing distribution systems, there is often the question whether it could be connected to existing parts of the network or if reinforcement of existing feeders is needed or if new feeders have to be constructed. In this section some aspects for the costs regarding loss changes, control and investment in new cables are discussed.

6.2.1 Aspects of Network Reinforcement

Network reinforcement, i.e. installing new lines or upgrading/replacing existing lines, is always a way to increase the transfer capacity of distribution networks. If worst case scenarios, i.e. maximum load/no generation and minimum load/maximum generation, are assumed, the network planning becomes quite straight forward and is well known. In the case that all generation is located at separated feeders, the situation is even more simplified. But this kind of capacity increase is usually expensive and time consuming. Thus in many cases it is preferred to postpone network reinforcement if other solutions are available.

Voltage

Network reinforcement is able to reduce the voltage variation for a given power transfer by increasing the conductor size and thus reducing the line impedance. The reduced voltage variations will affect all connection points at or behind the new or upgraded line. Consequently the voltage variations will be reduced on feeder by feeder base.

Network Losses

As network reinforcement decreases the line impedance, the network losses in the line will be reduced. Thus enlarging the conductor size of distribution network is always beneficial from the loss perspective. But since situations with maximum load, i.e. when losses are largest, are normally limited, network reinforcement only due to losses is probably seldom a chosen alternative.

6.2.2 Aspects of Network Automation

Increasing the network hosting capacity for DG of existing distribution networks can in many cases be achieved by introducing active network control. Benefits from introducing control are based on the assumption that the network could be utilised in a more efficient way if some parameters are adapted to the current network situation during some periods. If the network voltage during some periods is the limiting criterion for the connection of more DG capacity, active voltage control is, as shown in the previous chapters, an alternative to overcome the limitation to some extent. The active network control, which is considered in this work, includes a variable setpoint of the AVC relay, reactive power consumption and active power curtailment from DG units. Another advantage of introducing equipment for active voltage control is that the knowledge about the actual network situation may improve if the associated measurements are exploited. Thus the network operator can get a better overview in fault situations which probably will reduce outage times. In the same way data for the network utilisation will be available and can be used

for future network planning. In contrast to network reinforcement there are limits for the capacity increase by network control. Control may therefore not always replace network reinforcement.

Voltage

As mentioned in Chapter 2, active network control can impact the voltage in several ways. If the voltage profile is rather flat, the OLTC typically installed at the HV/MV substation will be able to alter the voltage in the whole network to maintain the voltage in a proper range. In networks with larger voltage differences between the network nodes or feeders, a more local measure as reactive power consumption or active power curtailment is needed to keep the voltage within the desired range. Neither reactive power consumption nor active power curtailment is at no cost and excessive use must be avoided.

Network Losses

Active voltage control impacts also the losses in the network. Voltage control by the OLTC will probably have the lowest effect. Notwithstanding, a changed network voltage will probably affect the power flow and thus the losses will change somewhat. By the use of reactive power consumption the losses are increasing in most cases as typical distribution system loads are already inductive and therefore the effect will be compounded by additional reactive power transfer in the same direction. In mixed load and generation feeders active power curtailment may both increase and reduce the losses. It depends simply on if the total feeder is basically of load or generation character and where the loads and DG units are located.

6.3 Network Planning for Active Distribution Systems

After discussing traditional distribution network planning in Section 6.1 and two different approaches to increase the hosting capacity of DG in existing distribution systems in Section 6.2, this section considers how these alternatives can be included in network planning. Quality of supply should be the main target also for active distribution systems. Thus introducing less well proven components and communication for the operation of distribution systems has to be considered particularly. It implies that for instance a basic operation of the network should also be possible when the communication is interrupted.

Nevertheless, compared to passive distribution systems in active distribution systems the actual network situation is known by the distribution system operator and the network can thus be operated closer to the physical limits. Under these circumstances the dimensioning rules for distribution networks change as well. The worst case scenarios are no longer necessarily the most important planning criteria, since these are usually rare and can be overcome by active network measures. However, especially in situations where intermittent generation is connected to the distribution system, time becomes an important parameter. During most of the time the network is operated with large margins to the limits and thus more DG could be connected. But the worst case scenarios still can occur and then active power curtailment is used to maintain the voltage limits. Thus it is important to consider the time variation of load and generation already during the planning process, to determine the expected amount of active power curtailment that is deployed.

If reactive power consumption and active power curtailment are employed, there are no clear limits for the maximum DG capacity. But the excessive use of these controls would be at a very high cost caused by large network losses and a lot of spilled DG energy. Therefore knowledge about the occurrence and the extent in time in which the different measures are used is critically needed.

Time series as load and generation profiles are thus critical to determine a

suitable network design. The use of load profiles is well established but is of course an approximation. As the generation profiles from intermittent sources are quite less regular and varying over the day, seasons and years, it is not possible to set up deterministic generation profiles for these units. For this reason probabilistic methods could help to make decisions about the occurrence of specific network situations.

In summary network design for active distribution networks abandons the application of deterministic worst case scenarios as base for network planning. Instead time variations of consumption and generation must be considered. Since these variations are of a stochastic nature, probabilistic approaches are needed to estimate the costs for increased losses and spilled energy introduced by measure for active network control.

6.4 Connection of Non Firm Capacity

In traditional network planning, distribution systems have to be dimensioned tackling worst case situations. In pure load networks this is typically maximum load since the line loading and the voltage decrease are largest during those periods. If distributed generation is connected to such distribution systems, there are two worst cases which cause high line loading and large voltage changes. These cases are:

- maximum load and no generation,
- minimum load and maximum generation.

Determining the firm capacity for any connection point by assuming worst case scenarios is quite straight forward. In this way, the obtained capacity can be guaranteed to be available at the connection point at every time (as long as the network configuration is the same). Thus connections with firm capacity are avoiding constraints for the connected DG units and are often the most favoured alternative.

However, as load and generation from intermittent sources are varying over time to quite a large extent, the occurrence of these worst case scenarios is rather rare and thus only a small fraction of the maximum network capacity is used during most of the time. Therefore it should be worth considering the duration curves for load and generation to determine the utilization factor of the connection.

6.4.1 Probabilistic Analysis of Load

Figure 6.2 depicts the duration curve obtained from a measured time series for typical load on a MV feeder in a distribution system. From the figure it can be concluded that maximum load occurs rather seldom. Only during less than 500 hours a year the load is at more than 80 percent of the maximum load. And only around 3000 hours per year the load is more than 50 percent of the maximum load. Thus significantly more than half of the year the load is below half the maximum load. The lowest load is around 20 percent of the maximum load which is quite a typical value for domestic distribution networks with electrical heating in the South of Sweden.

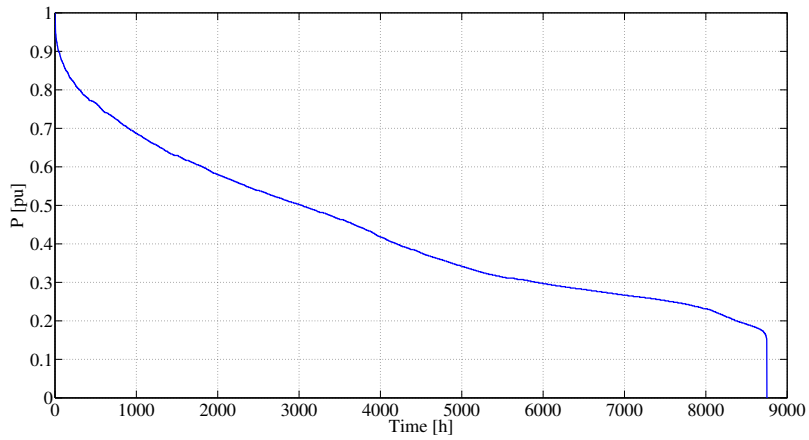

Figure 6.2: Example of a duration curve from measured data of typical load in a distribution system over one year.

The average load for the example in Figure 6.2 is only 43.2 %. Thus dimensioning the connection for the maximum load results in a utilisation factor of 0.43.

6.4.2 Probabilistic Analysis of Generation

In Figure 6.3 the duration curves for three synthetic wind power profiles are shown. Only around 500 hours a year the available power is at least 80 percent of the rated capacity of the wind turbine. Around 1500 hours a year the power output is more than 50 percent of the rated capacity. And more than half of the year only 20 percent or less of the rated capacity is available from the generation unit. During roughly 1000 hours per year there is no or nearly no output from the wind power units at all. For the three generic wind profiles

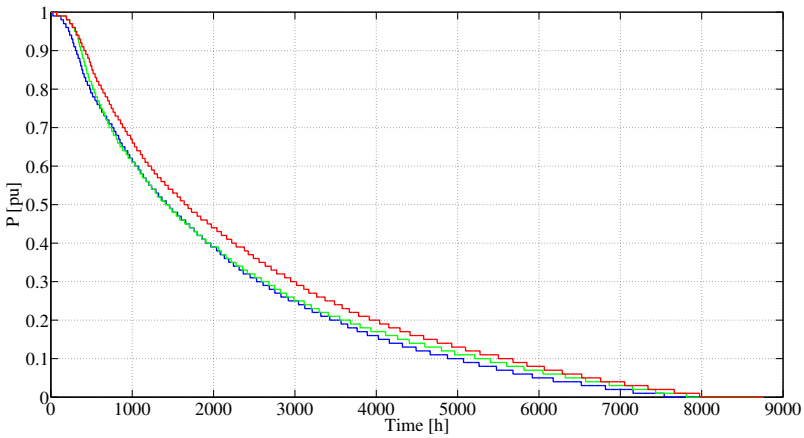

Figure 6.3: Example of three typical duration curves for the available active power from a wind turbine based on synthetic profiles that were derived from measured data.

in Figure 6.3 the average generation is 24.9 % of the maximum generation. Therefore dimensioning the connection for maximum generation would result in a utilisation factor of 0.25.

6.4.3 Results of Probabilistic Analyses

The duration curves in Figure 6.2 and Figure 6.3 clarify that worst case scenarios would be really rare events. Notwithstanding the correlation between the load and generation profile is unknown, it is most likely that both load and generation will probably be somewhere in the middle range during most of the time. Thus increasing the utilisation factor of the network by accepting non firm connections seems to be a reasonable alternative for the connection of distributed generation.

6.5 Summary

In this chapter an introduction to network planning has been given. Requirements for distribution networks and limiting components have been identified before some traditional design rules are specified and aspects for network planning with DG have been discussed. The impact of network reinforcement and network automation has been studied with focus on voltage and losses. Following approaches for network planning of active distribution systems have been taken into consideration. Finally duration curves for load and generation from intermittent sources have been studied and accepting connections with non firm capacity has been proposed for distribution systems with distributed generation.

Chapter 7

The 5-Step-Method

Connecting DG units with non firm capacity implies restrictions on the connection at least during some periods. There can be several reasons for restrictions as the voltage variation, the maximum line transfer capacity but also losses. Here the focus is on connections which have restrictions due to the network voltage.

In previous chapters it has been shown that active network control is able to increase the DG hosting capacity in existing distribution systems if the network voltage is the limiting factor for the connection of more DG capacity. As the methods for active network voltage control in most cases are at the cost of increased network losses or temporary active power curtailment, it is important to estimate the extent to which the control methods have to be utilised. In this chapter a new 5-Step-Method to determine the DG capacity at a connection point and to predict the need for control methods is formulated. Some simplifications for fast and less complex network calculations have been introduced to simplify the process.

In a test system the calculation method is used to predict the amount of curtailment which is needed if a DG unit with a given capacity is connected to a specific location in an existing distribution network. Different voltage control strategies have been applied and the expected need for restrictions, i.e. active power curtailment, has been calculated with the 5-Step-Method for each control strategy. For the verification of the 5-Step-Method the obtained results are compared to results from time stepped power flow calculations.

As a first guess it has been tried to base the calculations for the amount of active power curtailment only on probabilistic data for the OLTC position which is defined by the load and the generation. To also take the correlation between load and generation into account, another calculation method, which keeps the time context, has finally been developed.

7.1 Input Data

As input data the method needs a time series profile for the generation and the load as well as some network parameters. However, a complete model of the network and time series power flow calculations are not needed. Thus the method is saving time for preparing the network model and computation time. In medium voltage distribution networks voltage issues often turned out to be the most critical constraint regarding the DG capacity limit. Hence, the focus here is on the voltage limits and the thermal capacity is only checked in a worst case scenario at the start and then not treated any more.

The complexity of the input data is an important criterion for the convenience of a method for calculating the restrictions for a non firm DG connection. Thus the aim has been to reduce the number of input parameters and concentrate on parameters that are commonly available to a DNO or simple to get. For the proposed calculation method, the following key parameters are needed:

- a generation profile,
- a load profile,
- the short circuit impedance at the point of connection for the DG unit,
- some knowledge about the load either maximum load and short circuit (network) impedance at that node or minimum voltage at maximum load.

7.2 Simplifications and Limitations

To keep the effort for determining the active power curtailment from non firm connections low, some simplifications have been introduced in the model. As always the simplifications are reducing the complexity and the computation time but they are reducing the precision of the results, too. The following simplifications are presumed for the model:

- As the focus is on voltage control, the line capacity is determined in a very simple way without considering potential benefits from load at the same feeder.

- It is assumed that the largest voltage change will always occur at the same feeder. In principle the model is not limited to such cases but it makes the understanding more simple. Otherwise the voltage at more feeders has to be considered and the minimum has to be chosen to determine the OLTC position.

- The model of the OLTC is simplified in such way that the tap changer is allowed to operate whenever needed. There are no restrictions in the number of operations or delays.

When the simplifications above are applied to the model, the calculation of the expected active power curtailment becomes straight forward.

7.3 Planning Steps of the 5-Step-Method

In this section a method is presented for planning DG connection with respect to reactive power consumption by the DG units, i.e. $cos\varphi < 1(ind)$, variable AVC relay settings and active power curtailment. The goal is to determine the need for active power curtailment and thus the amount of curtailed DG energy, when DG units with a given non firm capacity are connected to some bus in an existing distribution network. The following five steps are proposed for planning DG connections to distribution systems with active distribution

management:

Step 1: Line capacity limits

Step 2: Voltage sensitivity

Step 3: Voltage variation and tap changer position

Step 4: Determining voltage without curtailment

Step 5: Determining curtailment

To apply the five steps above, the following procedure is proposed for each step of the time series:

1. Line capacity limits: The current introduced by the DG unit has to be less or equal to the line rating of the weakest line between the substation and the DG unit as in (7.1). Other DG units (partly) using the same lines have to be considered as well. (Benefits obtained from loads connected to the same line are assumed as unknown and are not taken into account.)

$$S_{line,max} \geq S_{DG,max} \tag{7.1}$$

2. Voltage sensitivity: Voltage sensitivity factors are used to describe the relationship between active or reactive power flow to or from a network node and the voltage at the corresponding node. From the linearised term in (7.2), the voltage rise per MW active power and Mvar reactive power in (7.3) can be derived from the short circuit impedance $(Z_{SC} = R_{SC} + jX_{SC})$ at the connection point.

$$\Delta V = R_{SC}P + X_{SC}Q \tag{7.2}$$

$$\Rightarrow \frac{\partial V}{\partial P} = R_{SC} \text{ and } \frac{\partial V}{\partial Q} = X_{SC} \tag{7.3}$$

3. Voltage variation and tap changer position: The estimation of the tap changer position is depending on the control strategy. For a fixed setpoint of the AVC relay the tap changer position is assumed to depend only on the

voltage at the secondary side of the HV/MV substation V_{sub}. However, for a variable AVC setpoint the position depends on the lowest voltage in the network. Thus for a variable setpoint of the AVC relay the lowest network voltage (probably at the load node) has to be determined before the tap changer position can be calculated.

1. **Fixed AVC setpoint:** In case of a fixed AVC setpoint the tap changer position is determined first and then the voltage at the load node is checked to assure that it is within the limits (i.e. the AVC setpoint is chosen accordingly). In (7.4) it is shown how the tap changer position is determined when the voltage at the substation secondary side busbar is as shown in (7.5) assuming that the DG units consume reactive power to lower the voltage. V_{grid} is the voltage of the feeding HV network.

$$TC_{pos} = \left\lfloor \frac{V_{avcSP} - V_{sub}}{TC_{stepsize}} \right\rfloor \tag{7.4}$$

$$V_{sub} = V_{grid} - \frac{\partial V}{\partial Q_{Trans}} \cdot (Q_{gen} + Q_{load}) \tag{7.5}$$

And thereafter the voltage at the substation, after adjusting the tap changer position $V_{sub,tc}$, is calculated as shown in (7.6).

$$\begin{aligned} V_{sub,tc} = {} & V_{grid} + (TC_{pos} TC_{stepsize}) \\ & - \frac{\partial V}{\partial Q_{Trans}} \frac{(Q_{gen,max} + Q_{load})}{1 - \frac{\partial V}{\partial Q_{Trans}} (Q_{gen,max} + Q_{load})} \end{aligned} \tag{7.6}$$

Finally in (7.7) the voltage at the load node V_{load} is calculated, while the

expected voltage at the load node $V_{load,exp}$ is used as correction factor.

$$V_{load,exp} = V_{sub} - \left(\frac{V_{sub}}{2} - \sqrt{\left(\frac{V_{sub}}{2}\right)^2 + (P_{gen} - P_{load})\frac{\partial V}{\partial P} - (Q_{gen} + Q_{load})\frac{\partial V}{\partial Q}} \right) \tag{7.7}$$

$$V_{load} = V_{sub} - \left(\frac{V_{sub}}{2} - \sqrt{\left(\frac{V_{sub}}{2}\right)^2 + \frac{(P_{gen} - P_{load})\frac{\partial V}{\partial P} - (Q_{gen} + Q_{load})\frac{\partial V}{\partial Q}}{V_{load,exp}}} \right) \tag{7.8}$$

If the obtained voltage at the load node V_{load}, which is expected to experience the lowest voltage, is larger than or equal to the lower voltage boundary V_{min}, the AVC setpoint is chosen adequate. Otherwise it has to be modified to fulfil the lower voltage limit.

2. **Variable AVC setpoint:** For a variable setpoint of the AVC relay the voltage at the load node V_{load} has to be known before the OLTC position can be estimated. How to determine the load voltage is shown in (7.7) but the voltage at the substation is as depicted in (7.5). After that the voltage at the load side is known, (7.9) shows how to estimate the tap changer position to fulfil the lower voltage limit.

$$TC_{pos} = \left\lceil -\frac{V_{load} - V_{min}}{TC_{stepsize}} \right\rceil \tag{7.9}$$

4. Determining voltage without curtailment: Based on the estimated tap changer position now the expected voltage at the DG connection point can be calculated as shown in (7.10). The voltage at the DG unit is according to (7.10) depending on the expected voltage rise by the DG unit. To obtain a more precise result for V_{DG} a roughly estimation of the voltage change is introduced by (7.11), where the factor 0.75 has been found to provide good

results.

$$V_{DG} = V_{grid} + TC_{pos}TC_{stepsize} - (Q_{gen,max} + Q_{load})\frac{\partial V}{\partial Q_{trans}} - \frac{Q_{gen,max}\left(\frac{\partial V}{\partial Q} - \frac{\partial V}{\partial Q_{trans}}\right) + P_{gen}\frac{\partial V}{\partial P}}{1 + \Delta V_{DG,exp}} \tag{7.10}$$

$$\Delta V_{DG,exp} = 0.75\left((TC_{pos}TC_{stepsize}) + (P_{gen} - P_{load})\frac{\partial V}{\partial P}\right) \tag{7.11}$$

5. Determining curtailment: From the voltage that would occur at the node where the generation unit is connected without limiting the active power output, it is possible to determine the required active power curtailment to maintain the voltage limit. In (7.12) first the voltage span above the upper voltage limit V_{max} is determined.

$$\Delta V_{DG,over} = V_{DG} - V_{max} \tag{7.12}$$

And from the voltage span over the upper voltage limit and the active power sensitivity at the connection point, the required amount of curtailment is calculated as shown in (7.13).

$$P_{DG,curt} = \frac{\Delta V_{DG,over} V_{DG}}{\frac{\partial V}{\partial P}} \tag{7.13}$$

From the active power curtailment needed in each time step the curtailed energy is calculated in (7.14) by summarising the curtailed power over the time values.

$$W_{curt} = \sum_{t=1}^{n} P_{DG,curt,t} \tag{7.14}$$

Compared to traditional power flow calculations the 5-Step-Method has a quite reduced number of input data. Therefore the time for setting up the network model is noticeably reduced which is quite beneficial for determining

DG capacity in daily work. Although computation time becomes less relevant in times of increasing computation power, a fast and straight forward calculation method can still be important, if several options should be checked against each other.

Losses from reactive power consumption for voltage control are not considered in the method above. Notwithstanding, the losses are an interesting performance figure, there would probably be quite a large error since only a small part of the network is used to determine the needed active power curtailment. However, a simple loss estimation for the feeder where the DG unit is connected could be included by some additional calculation steps. Since the calculation method is quite fast, it is also suitable for determining the rated DG capacity $P_{DG,rated}$ if some predefined curtailment is acceptable.

7.4 Verification of the 5-Step-Method

In Section 7.3 a method for quantifying the need for active power curtailment in case of non firm DG connection is introduced. In this section the results from the proposed method are compared to the results from power flow calculations to verify the new method. For the verification the test system in Figure 7.1 is taken as basis. As input data measured load an generation time series over one week are used for the verification. To cover the most important scenarios, first a network with separated feeders for load and generation has been assumed and in the second scenario load and generation have been connected to the same feeder. As the method could be of special interest in networks where active voltage control is available, beyond the base case also three different voltage control strategies have been applied during the verification.

7.4.1 Separated Load and Generation Feeders

As shown in Figure 7.1 a DG unit is connected to node 10 at the end of the second feeder in the test system. Depending on the voltage control mode

the rated capacity of the DG unit is varying between $P_{DG,rated}$ = 1.5 MW and $P_{DG,rated}$ = 3.0 MW. The load in the test system is located at node 6, which is the end of the upper feeder. The size of the load is chosen to be between $P_{load,rated}$ = 1.2 MW and $P_{load,rated}$ = 1.5 MW at power factor $cos\varphi = 0.98(ind)$. Thus the reactive power is between $Q_{load,rated}$ = 0.24 Mvar and $Q_{load,rated}$ = 0.30 Mvar respectively. For this network configuration the line impedance is the same for the connection point of the load and the connection point of the generation unit. With the assumed load profile the maximum load will be $S_{load,max}$ = (0.99+j0.20) MVA, the output from the DG unit varies between zero and the rated capacity.

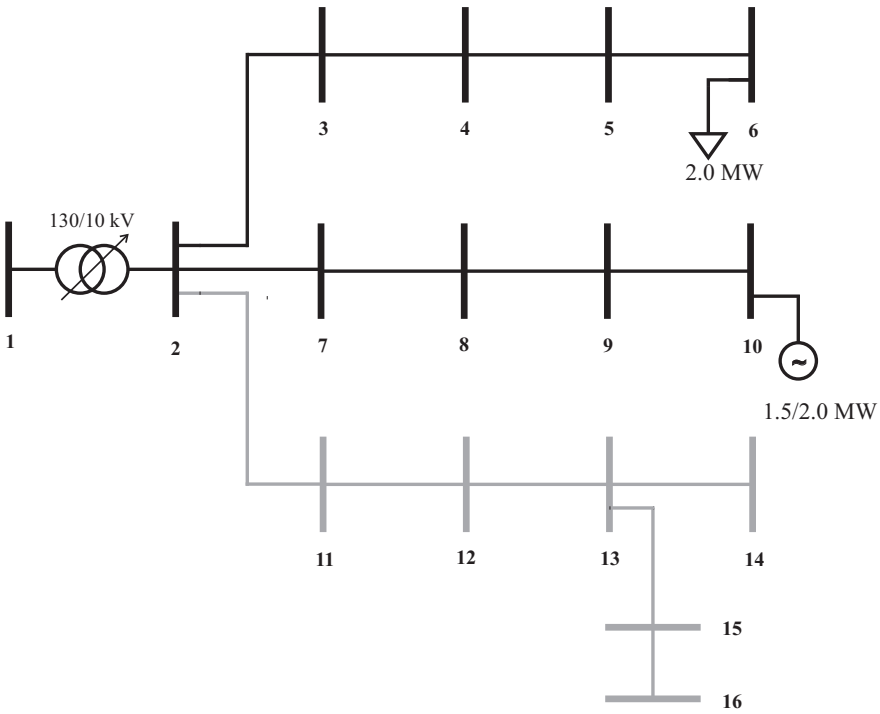

Figure 7.1: Schematic over a distribution test system with separated feeder for load at node 6 and generation at node 10.

The voltage change caused by the load is at around 0.056 pu according to (7.15). If the lowest voltage should not fall below 0.95 pu, the setpoint of the

AVC relay has to be chosen in such a way that the tap changer position has to be at least one step above middle position during periods of maximum load.

$$\Delta V = P_{load}\frac{\partial V}{\partial P} + Q_{load}\frac{\partial V}{\partial Q} = 0.99 \cdot 0.0512 + 0.20 \cdot 0.0256 = 0.056\,\text{pu} \tag{7.15}$$

Thus the voltage band, which is available for voltage rise caused by DG units, is only $V_{DG,avail} = V_{max} - V_{sub} = 1.05 - 1.0167 = 0.033\,\text{pu}$. The firm capacity of the connection point in the test system with the given load is therefore roughly, as shown in (7.16a), $P_{DG,firm} = 0.64\,\text{MW}$ for unity power factor. In case of reactive power consumption according to (7.16b) the available DG capacity increases for example to $P_{DG,firm} = 1.03\,\text{MW}$.

$$P_{DG,firm} = \frac{V_{DG,avail}}{\frac{\partial V}{\partial P}} = \frac{0.033}{0.0512} = 0.64\,\text{MW} \tag{7.16a}$$

$$\begin{aligned} P_{DG,firm} &= \frac{V_{DG,avail} + Q_{DG,rated}\frac{\partial V}{\partial Q}}{\frac{\partial V}{\partial P}} \\ &= \frac{0.033 + 1.5 \cdot tan(acos(0.89))0.0256}{0.0512} = 1.03\,\text{MW} \end{aligned} \tag{7.16b}$$

Control by Active Power Curtailment

In a first step the proposed 5-Step-Method is used to determine the curtailment for voltage control by active power curtailment only. Since the connected DG capacity in all three cases is considerably larger than the firm capacity of the connection point, a large amount of curtailment would be needed. In Table 7.1 the results are summarized. The results from the proposed 5-Step-Method is close to the one from the power flow simulations but still it is a little bit more conservative (i.e. expecting higher curtailment).

Table 7.1: Amount of curtailment that is needed for a wind turbine with $P_{DG,rated}$ = 1.5 MW, 2.0 MW and 3.0 MW according to the 5-Step-Method and power flow simulations if only active power curtailment is used for voltage control.

$P_{DG,rated}$	Simulated curtailment [%]	5-Step-Method curtailment [%]
1.5 MW	29.6	29.9
2.0 MW	42.3	42.4
3.0 MW	55.7	57.4

Control by Reactive Power Consumption and Active Power Curtailment

Now active power curtailment is determined if voltage control by reactive power consumption and active power curtailment are applied to maintain the voltage at the connection point. Still the DG capacity is larger than the connection capacity that can be guaranteed by operating the DG unit at variable power factor down to $cos\varphi = 0.89(ind)$. A summary of the results is in Table 7.2. Also in this case the results from the proposed 5-Step-Method are close to the results from the power flow simulations.

Table 7.2: Amount of curtailment that is needed for a wind turbine operating at power factor $cos\varphi = 0.89(ind)$ with $P_{DG,rated}$ = 1.5 MW, 2.0 MW and 2.5 MW according to the 5-Step-Method and power flow simulations.

$P_{DG,rated}$	Simulated curtailment [%]	5-Step-Method curtailment [%]
1.5 MW	7.2	8.0
2.0 MW	15.1	16.2
2.5 MW	20.6	21.8

Control by Variable AVC setpoint and Active Power Curtailment

With a variable setpoint of the AVC relay for voltage control the need for active power curtailment is also decreased further compared to the base case. The DG unit is now operating at unity power factor again. Depending on the actual OLTC position, the DG capacity is still larger than the connection capacity which can be guaranteed if the DG unit is operating at unity power factor. In Table 7.3 the results from the 5-Step-Method and from power flow simulations are summarized. Still the results obtained by the proposed 5-Step-Method are close to the results which were obtained from the power flow calculations. In contrast to the previous cases for a DG unit with a rated capacity of $P_{DG,rated} = 2.5\,\text{MW}$ (last row of Table 7.3) the amount of curtailment expected from the calculation method is slightly lower than the one from the power flow calculations. Thus in this case the method is not conservative.

Table 7.3: Amount of curtailment that is needed when the setpoint of the AVC relay is variable and the wind turbine is operating at variable power factor down to $cos\varphi = 0.89(ind)$ with $P_{DG,rated}$ = 1.5 MW, 2 MW and 2.5 MW according to the 5-Step-Method and power flow simulations.

$P_{DG,rated}$	Simulated curtailment [%]	5-Step-Method curtailment [%]
1.5 MW	6.0	6.4
2.0 MW	17.3	18.2
2.5 MW	28.7	28.5

Control by Variable AVC setpoint, Reactive Power Consumption and Active Power Curtailment

With a variable setpoint of the AVC relay and reactive power consumption for voltage control the need for active power curtailment is decreased further. Depending on the actual OLTC position, the DG capacity is still larger than

the connection capacity which can be guaranteed by operating the DG unit at power factor $cos\varphi = 0.89(ind)$. Also for this voltage control method the results are quite close to each other as shown in Table 7.4 and the results from the proposed 5-Step-Method are conservative again. Although the divergence in percent may seem quite significant, there is only a small divergence in absolute numbers corresponding to missed income.

Table 7.4: Amount of curtailment that is needed when the setpoint of the AVC relay is variable and the wind turbine is operating at variable power factor down to $cos\varphi = 0.89(ind)$ with $P_{DG,rated}$ = 1.5 MW, 2.0 MW and 2.5 MW according to the 5-Step-Method and power flow simulations.

$P_{DG,rated}$	Simulated curtailment [%]	5-Step-Method curtailment [%]
1.5 MW	0.5	1.5
2.0 MW	6.0	7.3
2.5 MW	13.2	14.1

7.4.2 Mixed Load and Generation Feeders

The test system in Figure 7.1 is now modified so that the load and the generation unit are located at the same feeder and here for simplification also at the same node which is node 14 as illustrated in Figure 7.2. The load in the test system is chosen to be $P_{load,rated} = 1.5\,\text{MW}$ with power factor $cos\varphi = 0.98(ind)$. The capacity of the generation unit is varying between $P_{DG,rated} = 1.5\,\text{MW}$ and $P_{DG,rated} = 3\,\text{MW}$. For the test system with generation and load at the same feeder, the evaluation from the previous case with separated feeder for load and generation has been repeated.

As the voltage decrease introduced by the load can be compensated by the voltage rise introduced by the DG unit located at the same network node, the results differ a lot from the ones for separated feeders. The need for ac-

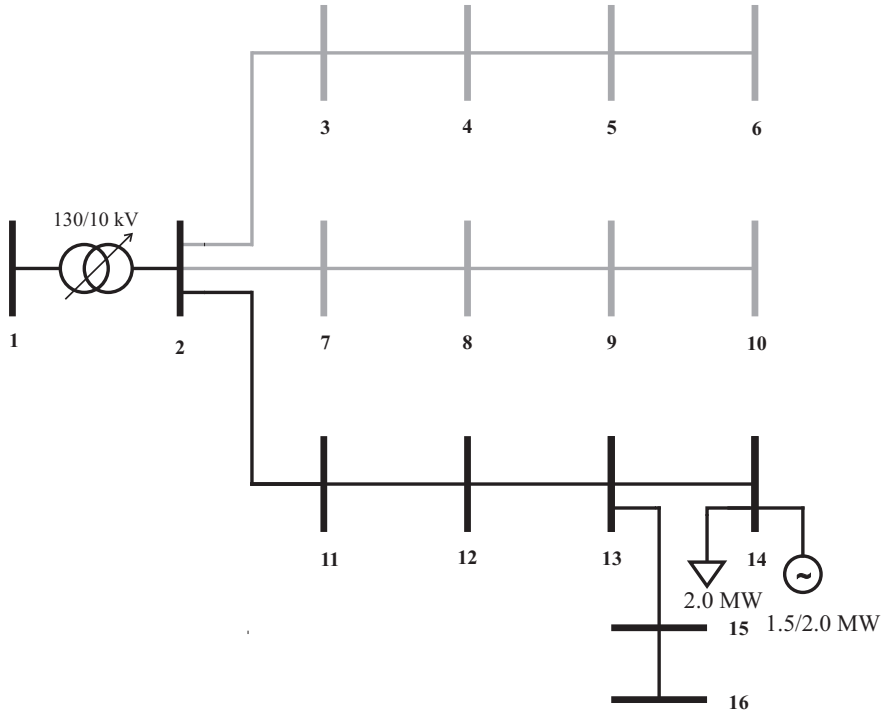

Figure 7.2: Schematic over a distribution test system with mixed feeder for load and generation at node 14.

tive power curtailment is decreasing for a DG unit with the same size as at separated feeders for all control methods. But still the focus here is on the difference between the two methods to determine the expected curtailment.

In Figure 7.3 the results for voltage control with and without reactive power consumption, when the setpoint for the AVC relay is fixed, are summarized. For all shown cases the results for the need of active power curtailment from the two methods are quite close to each other. The proposed method is showing more active power curtailment than would be expected from the power flow simulations. Thus the results are still conservative and predict more active power curtailment than probably needed.

For voltage control with a variable setpoint of the AVC relay, the results are

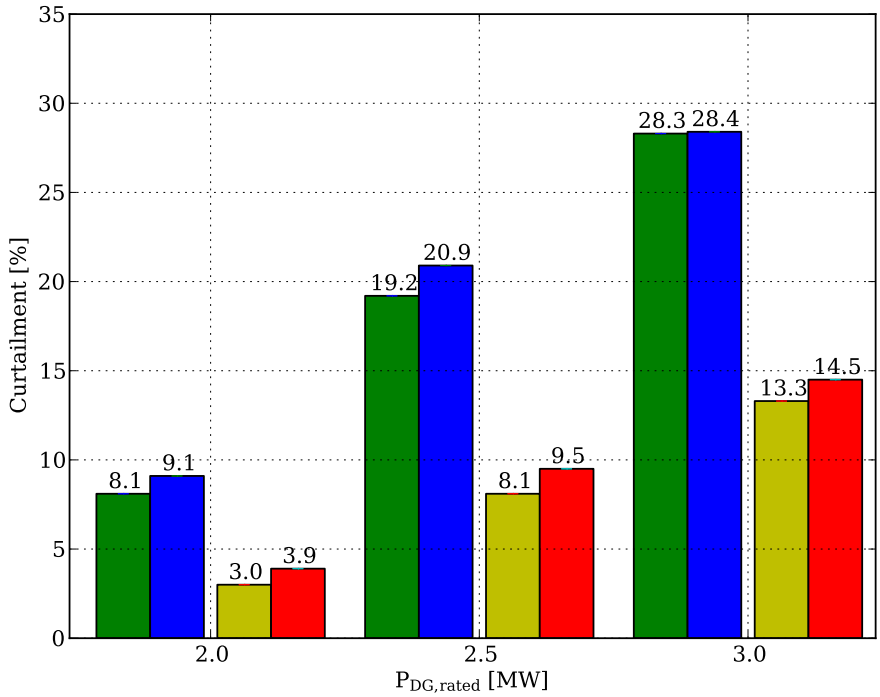

Figure 7.3: Needed active power curtailment according to power flow simulations and the proposed 5-Step-Method for a DG unit at a mixed feeder with $P_{DG,rated} = 2.0\,\mathrm{MW}$, $P_{DG,rated} = 2.5\,\mathrm{MW}$ and $P_{DG,rated} = 3.0\,\mathrm{MW}$ and a fixed set point of the AVC relay (green bars: simulated, unity PF; blue bars: 5-Step-Method, unity PF; yellow bars: simulated, variable PF; red bars: 5-Step-Method, variable PF).

depicted in Figure 7.4. In this case the deviations between the two methods are slightly larger than in the previous cases. And compared to most of the other results, these results are not conservative, which means that the calculated results show less need for curtailment as it is according to the power flow simulations.

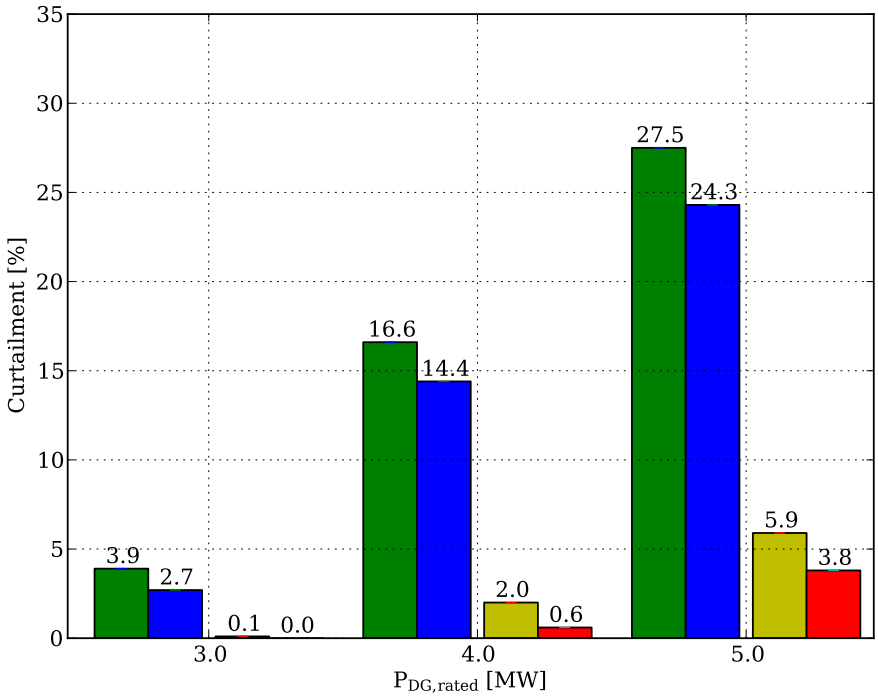

Figure 7.4: Needed active power curtailment according to power flow simulations and the proposed 5-Step-Method for a DG unit at a mixed feeder with $P_{DG,rated} = 3.0\,\mathrm{MW}$, $P_{DG,rated} = 4.0\,\mathrm{MW}$ and $P_{DG,rated} = 5.0\,\mathrm{MW}$ and a variable setpoint of the AVC relay (green bars: simulated, unity PF; blue bars: 5-Step-Method, unity PF; yellow bars: simulated, variable PF; red bars: 5-Step-Method, variable PF).

7.5 Summary

In this chapter a 5-Step-Method for determining restrictions on non firm connections has been presented. The method has been verified for distribution networks with various voltage control strategies. As a base case no active voltage control beside active power curtailment has been applied. In the more advanced and probably also more beneficial cases for active distribution sys-

tems, voltage control has been applied by a variable power factor from the DG units and a variable setpoint of the AVC relay. Thus several options to maintain the network voltage have been available for the active network management.

To summarize, the 5-Step-Method provides quite precise results for the required active power curtailment. But it turned out that the chosen input parameters are of large significance for the precision of the results. However, this is mainly due to the fact that the position of OLTC has a large impact on the available DG capacity and is not specific for this method but also for power flow simulations. Distribution system configurations with both separated and mixed feeders have been set up and subject to the verification of the proposed method. The results are quite precise but especially for a system with mixed feeders the method is not generally conservative compared to the results from power flow simulations.

Chapter 8

DG Capacity and Restrictions

If non firm connections are accepted for the integration of distributed generation, it is essential to get an estimation about the restrictions that should apply. To determine the amount of energy, which has to be curtailed with and without active network management, is more complex than calculating the firm capacity under worst case scenarios since time must be considered. To determine the estimated restrictions for a given DG capacity at a specific location in the test system or calculating the maximum DG capacity for a given amount of active power curtailment time series are needed - typically for a period of one year but also for variations over the years. Access to measurements over long time periods is often limited and therefore synthetic data can be an alternative. Here probabilistic time series are generated to obtain information about the expected generation from wind power over a time period of one year including the variations over the years.

In this chapter first the expected active power curtailment for a given DG capacity at a non firm connection will be evaluated in a test system. In a second case, the 5-Step-Method is used to determine the maximum DG capacity at a specific location in the network if a predefined amount of curtailment could be accepted.

The controls, which are assumed to be available to comply with the restrictions, are:

1. the AVC relay setpoint may be adjusted,

2. DG reactive power output can be controlled,

3. DG active power output can be limited.

8.1 Generation of Time Series

For analysis of worst case scenarios at most four values (minimum load, maximum load, minimum generation, maximum generation) are needed to determine the relevant numbers. As soon as the worst cases can be maintained by the active distribution system they are no longer the limiting factors and other numbers are of importance to evaluate the efficiency of the distribution system configuration. Typical values are restrictions in the active power transfer (i.e. active power curtailment) and losses. For these numbers not the instantaneous value but the sum over time, that is energy, is interesting. As load and generation in a distribution system are changing with time, their time series are of importance for studies in which energy flow is included.

The load typically has both diurnal and seasonal variations. Also there is a load variation between the years (e.g. from heating and cooling). This effect has been neglected. Thus for the load time series, measured data over one year is used. The load profile over a year for a medium voltage feeder in a Swedish distribution system is depicted in Figure 8.1. Beside the seasonal variation also the daily variation is found in the figure. Typical for loads, especially in case of electrical heating, is the low load during the summer time which often is as low as around 20 % of the maximum load during the winter. While the load in winter often reaches 80 % to 90 % of the maximum load, during summer the load is mainly between 20 % and 30 % of the maximum load. In Figure 8.2 the load profile of the same medium voltage feeder is shown over one week. The daily variation in the electricity consumption is characterized by a lower peak during the morning hours and the main peak during the evening hours. In total the load is only slightly varying between the days with the exception of the weekend (hour 120 to 168), when the total consumption is less.

As power generation from intermittent sources as sun and wind is varying

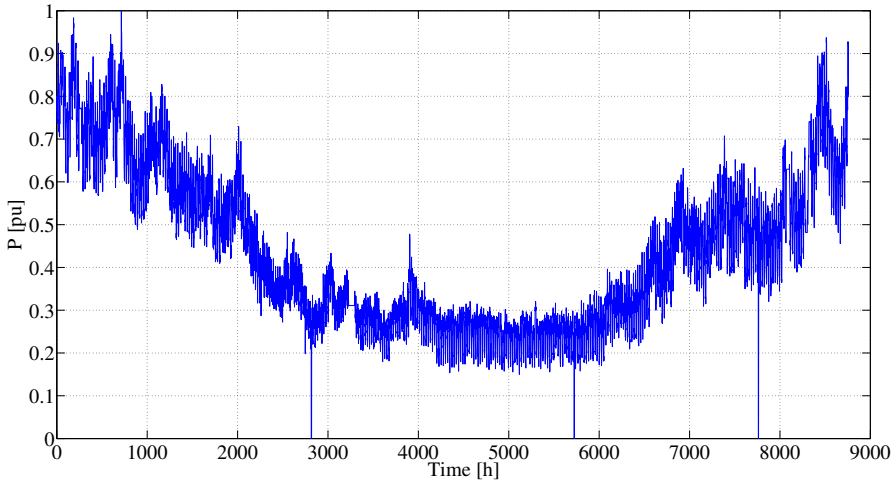

Figure 8.1: Load profile of a MV feeder in a Swedish distribution system with hourly measurements over one year.

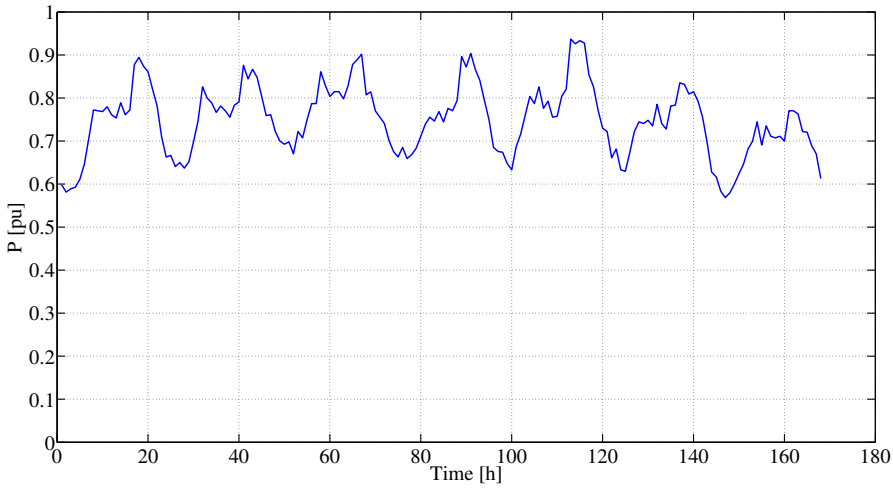

Figure 8.2: Load profile of a MV feeder in a Swedish distribution system with hourly measurements over one week.

throughout the days and seasons, but also quite a lot over the years, it would not be sufficient to use only measurement data from one year. But measured

time series over long time periods with a high resolution are rarely available. Therefore methods for generating synthetic time series have been presented in literature [70]. In the case of wind power, generic time series for both wind speed and power output from wind turbines can be created [71, 72]. For network simulations as in this chapter power output is more convenient than wind speed which needs to be converted into wind power.

Generating synthetic profiles from measured wind power data is feasible by several methods. The second order Markov Chain Monte Carlo method is the one which has been chosen in this work. Figure 8.3 shows three of the 100 synthetic time series that have been created to obtain a large statistical base. Even though the figure may seem complex to explain, it shows some important characteristics for the wind data. Typical for the wind profile is that there are periods with a large amount of wind power available alternating with periods of low or no wind. But also within these periods especially for high wind power the variation of the available power is significant. The procedure for generating synthetic wind power, which has been used in this work, does not include include any seasonal variations. In Figure 8.4 the three synthetic

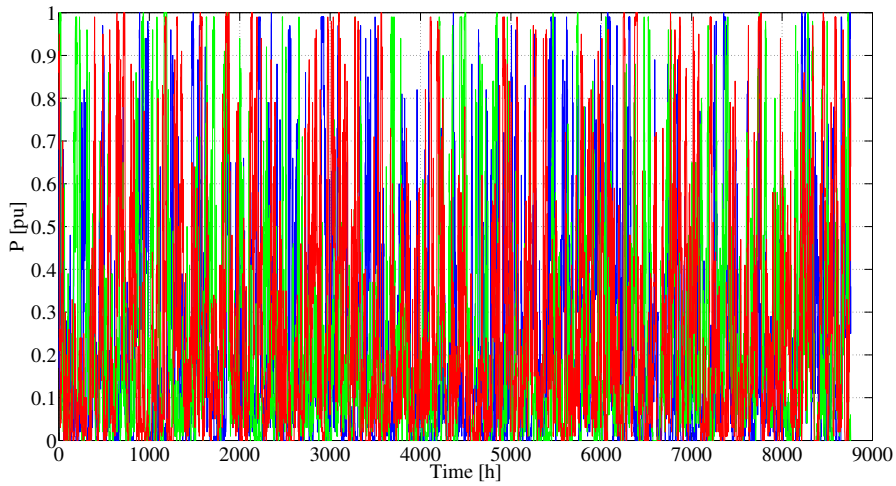

Figure 8.3: Three synthetic wind profiles derived from one measured wind power time series over one year with hourly values.

wind profiles from the previous figure are depicted over one week. In this

figure the periods with high and low wind power generation are even more obvious and the variations between the different synthetic profiles are clearly shown.

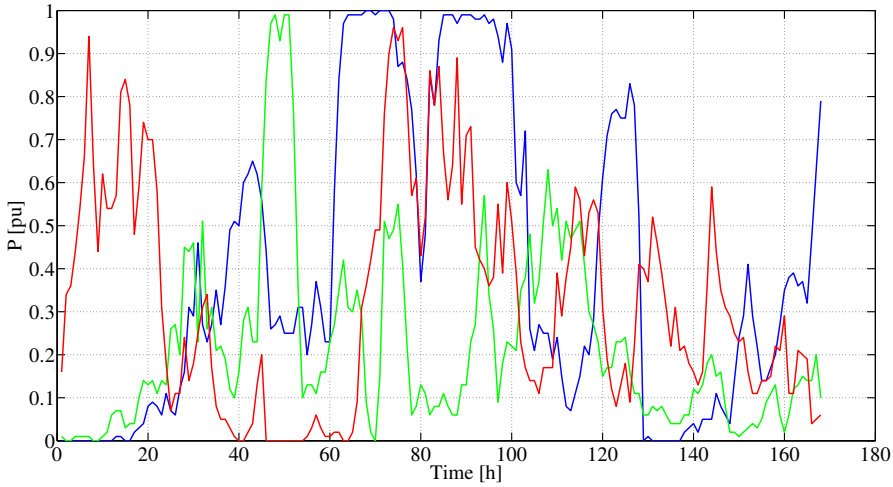

Figure 8.4: Three synthetic wind profiles derived from one measured wind power time series over one weak with hourly values.

In the load and generation profiles in Figure 8.1 to Figure 8.4 also worst case scenarios are covered since the large number of generation profiles ensures to cover most of the possible cases that can arise during the year. However, the main benefit from calculations based on a large number of varying generation profiles is the fact that predictions regarding energy and longer time periods become reasonable.

8.2 Calculation of Restrictions

In this section a practical application of the 5-Step-Method introduced and verified in Chapter 7 is discussed. In a first case study the amount of active power curtailment, which is needed to maintain the voltage limits in a test system, is determined for DG units with predefined capacities. Subsequently

the method is applied the other way around to determine the capacity of a DG unit, which results in a predefined amount of curtailment.

As distribution system the generic test system in Figure 7.1 is used with separate load and generation feeders. The load is chosen to be connected to node 6 at the upper feeder and has a rated capacity $P_{load,rated} = 1.5\,\text{MW}$. If a fixed setpoint for the AVC relay is used, it is set to $V_{AVCsp} = 1.025\,\text{pu}$. To model the load variation the measured one year load profile shown in Figure 8.1 is used. The variation in generation is modelled by 100 synthetic generation profiles based on a measured time series as described in Section 8.1.

8.2.1 Determination of Active Power Curtailment

For the planning of DG connections in many cases it is interesting to know how much active power curtailment would be needed to keep the network voltage within the limits when the DG capacity is larger than the firm capacity of the connection point. If the curtailment is larger than tolerated, some modifications for the connection are needed. Thus it would be reasonable to check how the necessity for active power curtailment changes if active network control is considered for voltage control. First the application of reactive power consumption can be tested and in a second step the voltage control may be upgraded with a variable setpoint for the AVC relay as well.

In this section four different voltage control methods are compared to determine the amount of active power curtailment, which is needed to maintain the voltage within the limits when DG units are connected to a non firm network connection. Also the impact of the nominal output of the DG unit on the requirements for active power curtailment is studied by varying the rated DG capacity.

To determine the expected curtailment three different nominal DG outputs (1.0 MW, 1.5 MW and 2.0 MW) are assumed. For each of the DG capacities the following four voltage control strategies have been applied:

1. AVC setpoint fixed and unity power factor from the DG units (AVC fixed, PF 1)

2. AVC setpoint fixed and variable power factor from the DG units (AVC fixed, PF var)

3. AVC setpoint variable and unity power factor from the DG units (AVC var, PF 1)

4. AVC setpoint variable and variable power factor from the DG units (AVC var, PF var).

In Figure 8.5 an overview over the obtained results is given as the estimated energy curtailment in percent of the available energy. As expected the need for active power curtailment is increasing for larger nominal DG output (e.g. from 7.7 % to 31.9 % for the first voltage control strategy and from 0.2 % to 4.1 % for the fourth voltage control strategy). But also within a given nominal DG output the curtailment is varying quite a lot between the different voltage control strategies. For instance the curtailment is decreasing from 21.0 % to 1.4 % for the nominal DG output of 1.5 MW, if the voltage control strategy is changed from the first to the fourth. Compared to the base case, i.e. the first voltage control strategy, the need for active power curtailment decreases if reactive power is consumed by the DG units or the setpoint of the AVC relay is variable. In most cases the curtailment is rather similar for both methods. However, for the DG capacity $P_{DG,rated} = 2.0\,\mathrm{MW}$ this is not the case as the OLTC position is changing due to the reactive power consumption from the generation unit and thus decreasing the voltage band that is available for the generation unit. The combination of both control methods decreases the need for curtailment further.

Figure 8.6 shows the histograms of the active power curtailment for the 100 synthetic generation profiles depending on the four voltage control strategies if a nominal DG output of 2.0 MW is chosen. From the figure it becomes clear that the predicted curtailment is strongly depending on the voltage control strategy. The variation is from around 30 % curtailment for the base case to around 4 % for the fourth voltage control strategy, even though the rated capacity of the generation unit is not changing. The variation in active power curtailment is close to normal distributed. The spread is larger for a fixed AVC setpoint than for a variable AVC setpoint.

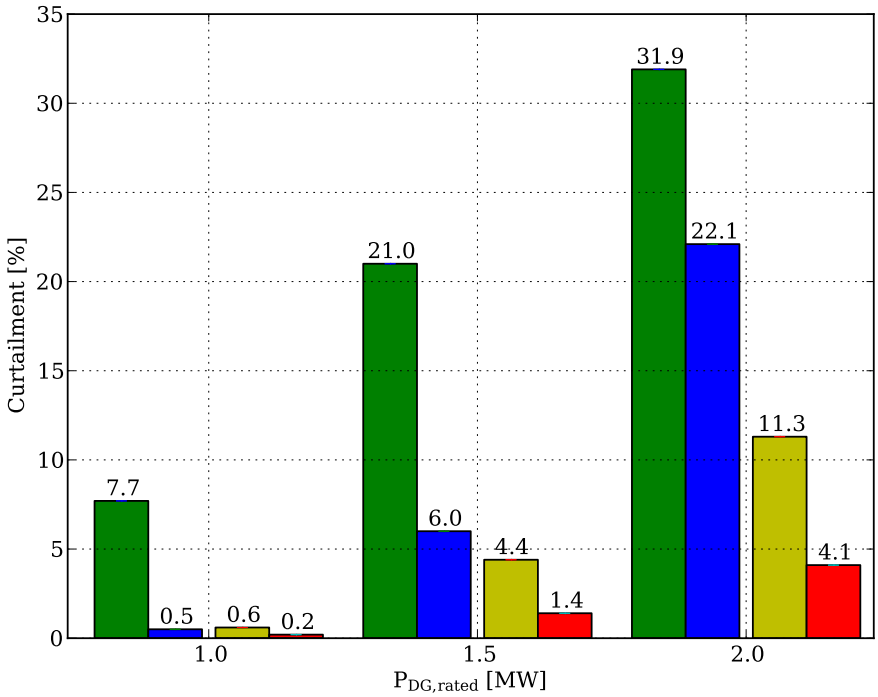

Figure 8.5: Histograms for the needed active power curtailment when generation units with nominal DG output $P_{DG,rated}$ of 1 MW, 1.5 MW and 2 MW are connected with various voltage control strategies (green bars: AVC SP fixed, PF unity; blue bars: AVC SP fixed, PF variable; yellow bars: AVC SP variable, PF unity; red bars: AVC SP variable, PF variable).

In this section the application of the proposed 5-step-method to determine the need for active power curtailment has been demonstrated for the connection of DG units with various nominal outputs higher than the firm capacity of the connection point in the assumed network. Notwithstanding, the calculation method is not as precise as power flow calculations, it is possible to get a rough estimation for the amount of active power curtailment for voltage purposes. Both the impact from the size of the DG unit and the used voltage control strategy can be studied by the use of the proposed method. By the use of synthetic generation profiles corresponding to 100 years most cases have

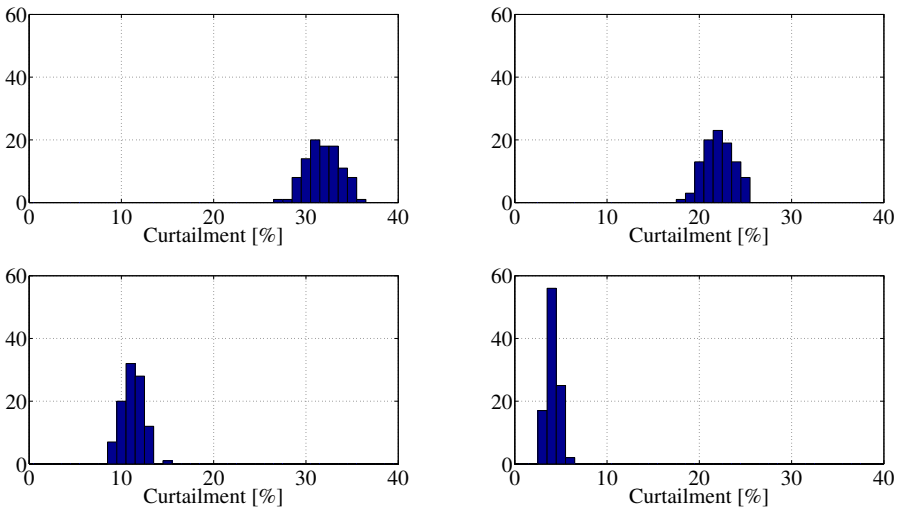

Figure 8.6: Histogram for the distribution of the needed energy curtailment over 100 synthetic wind power profiles when a generation unit $P_{DG,rated} = 2\,\text{MW}$ is connected with various voltage control strategies (upper left: AVC SP fixed, PF unity; upper right: AVC SP fixed, PF variable; lower left: AVC SP variable, PF unity; lower right: AVC SP variable, PF variable).

been included and the curtailment has been determined in a probabilistic way and not only depending on worst case scenarios. Thanks to the simplification of the proposed calculation method such studies can be performed within some seconds.

8.2.2 Determination of DG Capacity

Another approach for the connection of DG is to predefine a tolerable percentage of energy curtailment beforehand and then choosing the rated capacity of the DG unit according to the expected curtailment. In this section the proposed 5-Step-Method is applied to determine the rated DG capacity for such a case. As the four strategies for active voltage control from the previous section are considered and also curtailment of active power will be tolerated to

some extent, the rated DG capacity may be larger than the firm capacity of the connection point. In the base case active power curtailment is considered as the only method to maintain the voltage. To study the impact from active voltage control strategies, reactive power consumption and a variable setpoint of the AVC relay as well as their combination are applied.

Four different levels of acceptable active power curtailment have been chosen for the study. As base case zero active power curtailment is accepted to get an idea about the firm capacity of the connection point and the increase of the rated DG capacity for the different voltage control strategies. Afterwards the nominal DG outputs for active power curtailments of 1 %, 2 % and 5 % are determined.

Figure 8.7 shows the obtained nominal DG outputs that should be chosen according to the predefined values of active power curtailment if an average over 100 synthetic wind profiles is applied. As expected the calculated nominal DG output is depending on the percentage of accepted energy curtailment. For example increases the average of the nominal DG capacity in the base case from 0.7 MW to 0.9 MW if the acceptable curtailment is changing from 0 % to 5 % of the energy that is available from the DG unit during a year. If choosing voltage control strategy four instead of the first one, the increase in nominal DG output is even more from 0.6 MW to 2.1 MW. But also the choice of the voltage control method has a large impact on the nominal DG output. Only active power curtailment for voltage control results in the lowest DG capacity for all levels of accepted active power curtailment. In the test system configuration reactive power consumption and a variable setpoint of the AVC relay have almost the same beneficial impact on the DG capacity for a given amount of curtailment. The combination of both methods increases the DG capacity further at the same curtailment level. In the case of 2 % acceptable curtailment for instance the nominal DG output is 0.8 MW for the base case but 1.6 MW for the fourth voltage control strategy. An exception is the first case in which no active power curtailment is accepted. As a reason of the tap changer parameters, which cause a higher tap changer position during some time period, the *average* DG capacity for a variable AVC relay setpoint is less than for the fixed AVC setpoint.

In Figure 8.8 the histograms of the nominal DG output distribution are shown

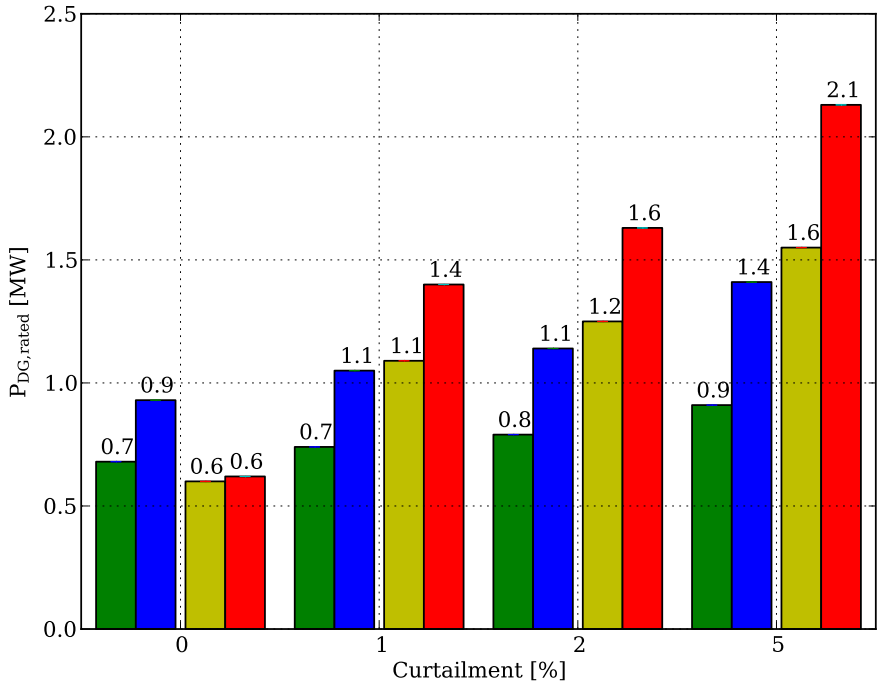

Figure 8.7: Possible nominal DG output for an acceptable active power curtailment of 0 %, 1 %, 2 % and 5 % presented for the four voltage control strategies (green bars: AVC SP fixed, PF unity; blue bars: AVC SP fixed, PF variable; yellow bars: AVC SP variable, PF unity; red bars: AVC SP variable, PF variable).

for the 100 synthetic wind power profiles if 2 % of energy curtailment could be accepted. Between the various voltage control strategies the average DG capacity varies a lot from around 0.7 MW for the base case (first strategy) to approximately 1.7 MW if reactive power consumption and a variable setpoint of the AVC relay are available, i.e. strategy four. For a fixed setpoint of the AVC relay, i.e. voltage control strategy one and two, as in the two upper sub figures, the distribution of the DG capacity is quite narrow between the 100 different generation profiles. If the AVC relay has a variable setpoint the variations are larger as the tap changer positions may vary depending on the generation profiles. The more advanced control is used and thus more

degrees of freedom are available, the more distributed are the nominal DG outputs between the years.

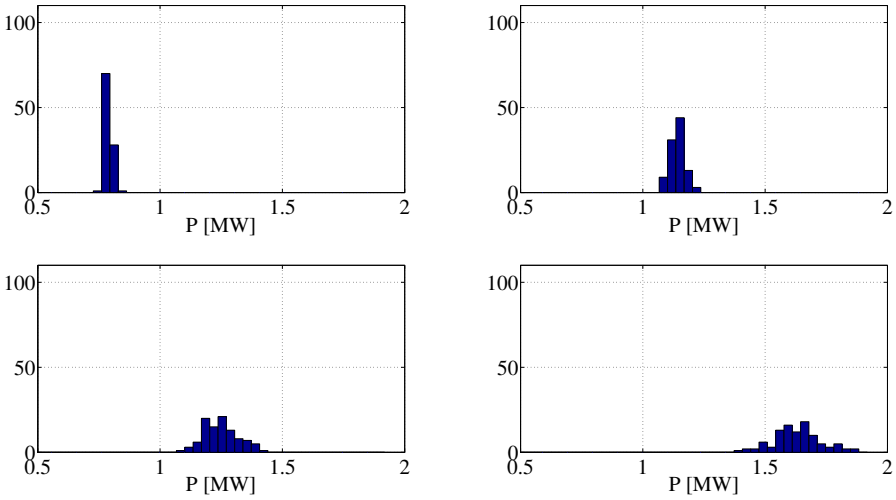

Figure 8.8: Histograms for the possible nominal DG output over 100 synthetic wind power profiles if 2 % of average energy curtailment are accepted and the four different voltage control strategies are applied (upper left: AVC SP fixed, PF unity; upper right: AVC SP fixed, PF variable; lower left: AVC SP variable, PF unity; lower right: AVC SP variable, PF variable).

In previous figures the nominal DG output has been shown for four selected curtailment levels (0 %, 1 %, 2 % and 5 %). In Figure 8.9 the nominal DG output is illustrated depending on the acceptable curtailment in a range between 0 % and 5 %. This representation might be chosen to find the optimum of energy curtailment and installed nominal DG output. In the two upper sub figures the setpoint of the AVC relay is constant and therefore the available DG capacity is increasing almost linear with the tolerated active power curtailment. In the two lower sub figures the AVC setpoint is variable and thus depending on the expected lowest voltage in the network. Adjusting the tap changer position has a large impact on the available DG capacity and is a stepwise manner. Therefore the correlation between the accepted curtailment and the rated DG capacity is no longer linear in all cases.

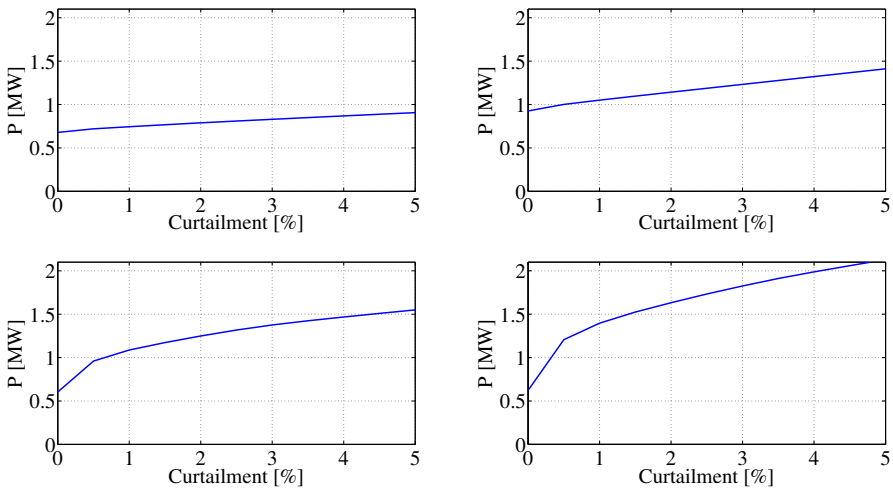

Figure 8.9: Nominal DG output that can be connected depending on the level of acceptable energy curtailment subject to the four voltage control strategies (upper left: AVC SP fix, PF unity; upper right: AVC SP fix, PF variable; lower left: AVC SP variable, PF unity; lower right: AVC SP variable, PF variable).

Previous in this chapter (see Figure 8.7) the average DG capacity for a predefined percentage of acceptable active power curtailment has been shown. In case of, for instance, 2 % accepted curtailment in average the DG capacity could be chosen to 1.6 MW, if active voltage control with a variable AVC setpoint and a variable power factor for the DG units is assumed. As the generation from wind power varies over the years, the active power curtailment would be less than 2 % during some years but higher during others. Figure 8.10(a) shows a histogram with the probability for the various capacities leading to 2 % curtailment in different years. In Figure 8.10(b) the DG capacity is plotted interpolated over the quantiles for 2 % curtailment.

Figure 8.10(a) indicates that the DG capacity varies roughly between 1.4 MW and 1.8 MW for the synthetic wind data of 100 years. Thus it becomes obvious that it is not sufficient to chose only one year of data to determine the DG capacity for achieving 2 % of curtailment. In the worst case the DG capacity could have been chosen according to one of the extreme years, resulting in

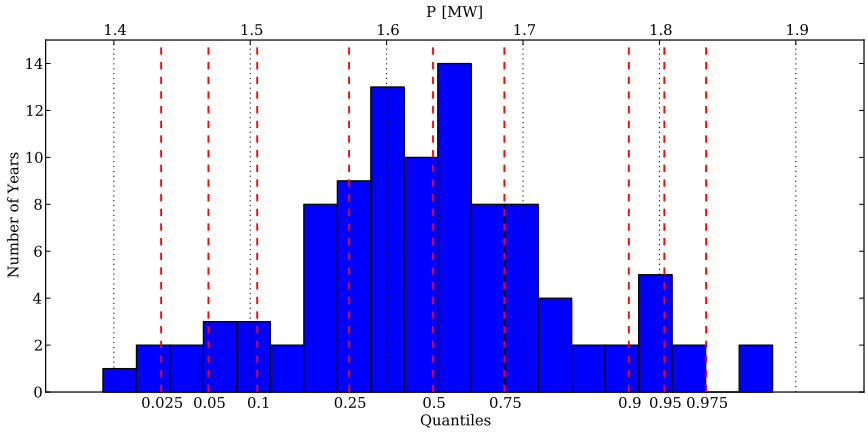

(a) Histogram indicating the DG capacity (upper X-axis) for 2 % curtailment.

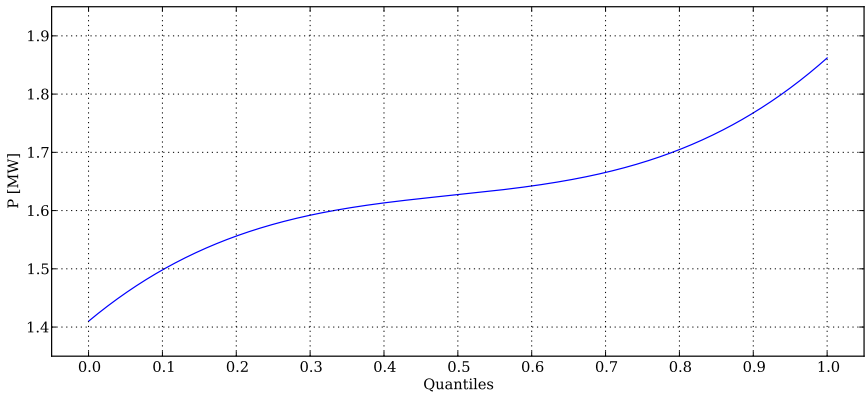

(b) Quantiles to satisfy 2 % curtailment for varying DG capacity.

Figure 8.10: Variation of DG capacity which is acceptable to satisfy an expected energy curtailment of 2 % over synthetic wind profile data covering 100 years.

lower or higher curtailment than expected during most of the years. While the quantiles in Figure 8.10(a) are limited to some characteristic values, in Figure 8.10(b) the DG capacity is determined for any arbitrary quantile. The graph should be interpreted as the fraction of years for which the curtailment is expected to be greater than 2 % if the corresponding DG capacity is cho-

sen. If for example a DG capacity is chosen to be 1.7 MW, the curtailment will be more than 2 % during 80 % of the years. Conversely, the curtailment is expected to be less than 2 % only during 20 % of the years.

8.3 Summary

Restrictions that are valid for non firm DG connections have been analysed in this chapter by applying the 5-Step-Method on generic time series for wind power generation. The maximum DG capacity at a connection point in a distribution system has been determined for a predefined amount of active power curtailment in the test system. And the other way around, the expected curtailment for a given DG capacity at a specific location has also been calculated.

The case study shows the impact of the accepted curtailment but also the benefits from the various voltage control strategies. In real applications the method could be used to decide the adequate size of a DG unit for the connection when the acceptable amount of active power curtailment is known. The results obtained from the method can also help to determine if and to what extent active voltage control should be implemented to permit the connection of distributed generation to an existing distribution network.

Chapter 9

Application Considerations

In this chapter the results from the previous chapters about voltage control in distribution networks and the 5-Step-Method for determining restrictions on limited connections are linked together. The outcome are considerations about the implementation of active distribution systems for distribution system operators and distributed generation developers.

9.1 Linking Voltage Control and Determination of Restrictions

Previously in this work coordinated voltage control for distribution networks has been introduced. The presented algorithm for coordinated voltage control includes the adjustment of the AVC setpoint and the control of the reactive power consumption as well as the active power curtailment. To verify the coordinated voltage control, it has been simulated in a Swedish low and medium voltage distribution network, where additional DG capacity has been added to stress the control algorithm. In the field test, as a next step, an existing passive distribution network has been upgraded to an active distribution system with coordinated voltage control to get experience of the impact, that asynchronous measurement data has on the controller, and for testing the implementation procedure.

The proposed control algorithm turned out to be efficient for voltage con-

trol in networks with a high DG penetration. Each of the two main methods for voltage control, adjusting the AVC setpoint and reactive power consumption, shows to have a noticeable impact for voltage control. Nevertheless their combination is even more efficient. However, as coordinated voltage control introduces network automation and abandons traditional worst case scenarios, active power curtailment is needed as a last measure to keep the voltage within the limits. If the connection requires temporary limitations on the active power output, the connection capacity is less than the nominal DG output and thus the connection is non firm.

As mentioned before, connections with limitations may be accepted under the premise that the restrictions occur rarely and the active power curtailment only applies to a small portion of the total available energy from the DG units. Though from a technical perspective of view, it is preferable to implement coordinated voltage control in distribution networks to increase the DG hosting capacity and avoid or at least postpone network reinforcement. However, if there are constraints on the connection for DG units, i.e. active power curtailment is applied for limiting the voltage rise, it is essential to know at least approximately how often and to which extent these restrictions will limit the output from distributed generation.

Of course coordinated voltage control could also be technically implemented without having the possibility to determine its expected benefits beforehand. But without having a clue about the amount of constraints that still will be necessary, it is hard to motivate a specific capacity at a connection point. As far as active power curtailment is an available option, a DG unit with any nominal output can be connected to each connection point without violating voltage limits.

The 5-Step-Method presented in this thesis could be applied for determining the expected need for constraints already today, if non firm connections could be accepted and at least a basic voltage control relying on active power curtailment is introduced. Already with this very limited control the voltage margins could be reduced and more DG could be connected to existing networks. However, the real voltage at the customer connection points are still unknown and thus margins will still be needed and limit the hosting capacity at a connection point. First when coordinated voltage is introduced, the full

benefits from voltage control can be obtained. As the simulations of the existing network and the field test have shown, there is most likely a large benefit from introducing coordinated voltage control in other networks, too.

As a consequence coordinated voltage control and the possibility to determine the constraints are needed together. Thus the hosting capacity of existing distribution networks can be increased and DG units with suitable nominal output can be chosen. By this combination the planning of efficient active distribution systems with a high DG penetration is possible.

9.2 Distribution System Operator

The distribution network operator is the main actor regarding the implementation of network automation and upgrading existing distribution networks to distribution systems. As the owner and operator of the network the DNO takes the decision, if voltage control is implemented and to which extent. Thus it depends on the DNO which kind of connections, with respect to possible regulations, are offered to DG developers. When introducing network automation and turning passive distribution networks into active distribution systems, the DNO becomes a distribution system operator (DSO). In this section application issues for the implementation of network automation and non firm DG connections to be considered by DSO are discussed.

9.2.1 Monitoring Actual Network Status

Today there is usually only little information available about the network operation state in low and medium voltage distribution systems further down than the HV/MV substation. Until some years ago communication has been quite rarely available in rural areas. However, as the distribution network have been pure load networks and designed for maximum load anyhow, there has not been any need for more information. This has changed a lot since some years ago. Distributed generation on the low and medium voltage level becomes more and more common. By the fast development of mobile commu-

nication networks high data transfer capacity has become available also in rural areas and at a lower cost.

Requirements regarding the network voltage in distribution networks are basically about the voltage at the customer connection point. In passive distribution networks this important measure is usually not well known. However, the worst case value is comparatively simple to determine, but large margins have to be applied in other cases. Electronic electricity meters with communication provide the feasibility to obtain measurements of the voltage at the customer side. With less ambitious objectives under- and overvoltage alarms can be recorded by the electricity meters and for instance collected by the DSO once a month with the usual energy measurement readings. Thereby locations with critical voltages can be identified and the data could be used for future network planning.

With higher ambitions voltage measurement readings could be performed continuously for network monitoring. Thereby the actual network situation would be known much better, which again would be useful for future network planning, but can also be used as input data for active network control as e.g. for coordinated voltage control. However, an upgrade of the communication link to the electricity meters is probably needed if a large number of meters should be read in short intervals.

For control purposes it might be sufficient to determine some customer connection points, where the voltage is expected to be closest to the limits, and apply frequent measurement readings only to electricity meters located at these connection points. Identifying connection points exposed to lowest and highest voltages could be done by detailed studies. In that case the number of meters is reduced by increasing the level of detail in the studies. But also under- and overvoltage alarms from existing meters can be used to determine exposed locations. Although the amount of data per meter reading is quite small, it has to be mentioned that frequent measurement readings will create a huge amount of measurement data to be transferred. But since it is proposed to have the control locally in the substation, the data does not need to be transferred to the control center and nor does it have to be stored.

Implementing the infrastructure for obtaining continuous voltage measure-

ments will not be for free. Even though at least in the Swedish case the electricity meters are already in place, some part of the infrastructure is probably needed to be upgraded, to allow the continuous transfer of measurement data. Beside the measurement equipment distributed in the low and medium voltage networks, a central unit for data acquisition is needed, too. In principal this unit can be placed either in the HV/MV substation or at the network control center.

If the efficient integration of distributed generation is an objective, information about the network status is essential to reduce margins that are mainly preserved for some rarely occurring worst case situations or never at all. The obtained measurement data can be used for either network automation or planning of future network reinforcement.

To implement monitoring of the actual network status, the following steps are suggested:

1. Data measurement setup:

    a) Determine the area for data measurement,

    b) Identify the data to measure (e.g. phase voltage at customer side).

2. Deciding the extent of data to measure, i.e. the quantity of measuring points, the frequency of measurements (also depending on requirements for controller).

3. Make a decision on the equipment to use (e.g. electricity meters).

4. Determine how to process the measured data (e.g. Where? To save or not?).

9.2.2 Implementation of Control Algorithm

The voltage control algorithm presented in this thesis is mainly based on two methods for voltage control, adjusting the setpoint of the AVC and reactive

power consumption, and as a last option active power curtailment. Implementing the adjustment of the setpoint for the AVC can be decided and carried out by the DSO itself, since the DSO has access to the involved equipment, the electricity meters and the OLTC of the HV/MV substation transformer. But information about the actual network status is needed. However, regarding reactive power consumption and active power curtailment the DSO is depending on the equipment of the DG developer. Thus an interface between the control equipment in the network and the DG unit is needed.

Voltage control by changing the setpoint of the AVC is an efficient method for voltage control in distribution systems. However, a transformer with an OLTC is, at least in Sweden, normally only available at substations from the regional network to the medium voltage distribution network. Thus by operating the OLTC the voltage can only be adjusted in the whole underlying network and tap changer operations affect the medium and low voltage level at the same time. Therefore voltage control by the OLTC is only an option if the used voltage band in the entire network is adequate narrow. An OLTC changer can alter the voltage only stepwise. Hence a fine tuning of the voltage is not possible and some margins are needed to keep the voltage within the desired range. In return, the OLTC is usually able to alter the voltage in a large range.

As the operation of the OLTC in principle does not introduce any network losses, the OLTC is suitable to adjust the voltage over long periods. On the contrary, for short time voltage adjustments the OLTC should not be used to a large extent, due to its mechanical wearing. The wearing has been reason for controversial discussions at DNOs for quite a long time. While some DNOs try to minimize the number of tap changer operations as much as possible, other DNOs accept a slightly larger number of operations per day. The maintenance interval of an OLTC is not only depending on the number of operations but also time dependent and thus tap changer operations are at a very low cost within a certain range. In summary the OLTC is convenient for adjusting voltage variations, even if they are large, in entire networks with a narrow voltage band on a long time perspective.

Voltage control by changing the reactive power flow is definitively an option to consider in medium and low voltage distribution systems. Compared to

voltage adjustments by the OLTC, changes in the reactive power flow can affect the voltage locally or substation area based. Usually both is the case, but it simply depends on the location of the impedance of the connection point. If the main part of the reactance originates from the transformer impedance as it is usually the case in low voltage distribution networks, the impact of reactive power affects a whole substation area. However, if the reactance is mainly distributed along a feeder, the voltage is primarily affected on a feeder base or depending on the distribution along the feeder even more locally. By affecting the voltage on a feeder base, reactive power is suitable to decrease the actually used voltage band in a distribution network.

Theoretically the whole voltage rise introduced from the injection of active power can be compensated by reactive power consumption at the connection point. The efficiency of reactive power for voltage control is to a large extent depending on the X/R ratio at the connection point. In (9.1) the relation between the active power injection, the X/R ratio at the connection point and the amount of reactive power needed to eliminate the whole voltage rise is shown.

$$Q_{DG} = -\frac{R}{X} P_{DG} = -\frac{1}{\frac{X}{R}} P_{DG} \tag{9.1}$$

As indicated by (9.1) for an X/R ratio around 1 or less the reactive power consumption has to be as much as the active power injection or even higher to eliminate the voltage rise totally. Thus, in practice limitations for the application of reactive power for voltage control have to be considered as well. The transfer capacity of the line is an obvious limit. The transfer of reactive power introduces network losses and usually DNOs are aiming to reduce the reactive power through HV/MV substation transformers for loss reduction but also due to the requirements from the transmission network operators.

Many modern DG units with full-scale power converters have reactive power capabilities that are variable over a large range and independent from the active power output as shown for the wind turbine in the field test area. Therefore reactive power is available at a reasonable cost to some extent and controlling the reactive power according to the needs for voltage control is possible.

Most efficient for the integration of distributed generation is the use of both voltage control methods. Nevertheless, in some situations it is probably sufficient to have only one of the methods available, depending on the amount of DG connected.

The following steps for the implementation of control are recommended:

1. Determine if and to which extent reactive power consumption and active power curtailment are available from installed DG units. Set requirements on active and reactive power control for new DG units.

2. Determine which kind of control is needed for an efficient integration of DG.

3. Agree on an interface for communication to the DG units.

4. Check the possibility for adjusting the setpoint of the AVC.

5. Implement the coordination controller.

9.2.3 Network Losses

The transfer of active and reactive power through overhead lines, underground cables and transformers causes active power losses. Placing generation close to the consumers, as it usually is the case for DG, may both increase or decrease the losses. It depends of the location and the amount of the DG capacity as well as the correlations with the load. In pure load networks a small amount of DG is likely to decrease the losses, if both load and generation are located at the same feeder. With separated feeders the losses are always increasing. Though from the perspective of losses, but also regarding the voltage rise, connecting at mixed feeders should be preferred.

A result from the simulations is the increase in losses compared to the base case. For just the largest losses, occurring with variable power factor, it is easy to accept that the transfer of reactive power probably will increase the losses. However, the losses are also increasing for coordinated control and

unity power factor. In the test systems the nominal output of the DG units is much larger than the maximum load and the power flow will be reversed quite often. Thus it can be assumed that the higher utilisation of the network lines causes the increase of losses.

DSOs usually attempt to reduce the losses in the network and thereby minimize their costs for network operation. Therefore it would be preferred to introduce a voltage control method which does not increase the losses. From this perspective, the OLTC is very much suitable for voltage control as it normally does not change the losses, beside the effect arising from the change in power flow caused by the introduced voltage change. But other limitations restrict the use of the OLTC for voltage control. Consuming reactive power for voltage control may however increase the total flow of reactive power in the lines and thus increase the losses during times the voltage control is active. But again it is depending on the type of network and the actual network situation. Distribution networks consisting of underground cables do normally generate reactive power and especially during low load situations or on long distribution feeders the generated reactive power may exceed the reactive power consumed by the loads and caused by the loading of the line. Depending on the entire network situation it could thus even be beneficial to consume reactive power if there is a surplus of reactive power, e.g. from low loaded underground cables.

Nevertheless, the losses introduced by reactive power consumption for voltage control are normally limited in time and their costs should be less than the gain from the additionally injected active energy. Therefore a temporary increase in losses should not be an obstacle for voltage control by changing the reactive power flow. Of course it has to be checked that the line capacity is adequate to carry the reactive power flow as well. To summarize, changes in both active and reactive power flow may increase or decrease the losses in the network. As the utilization factor of the network is increasing, this fact is not unexpected and should be tolerated. A discussion about the allocation of the losses may be needed, especially with a larger amount of DG units.

For determining the impact on the network losses, the following steps are recommended:

1. Determine if connection at mixed feeder is possible.

2. Identify the actual power flows in the network both for active and reactive power.

3. Determine if the network is able to transfer additional reactive power.

4. Check increase in losses against additional energy from DG.

9.2.4 Reliability and Maintenance

Even though there are also active parts, that need some maintenance, in passive distribution networks, their complexity is rather low, which is quite beneficial regarding the costs. Upgrading the equipment of distribution networks and thus increasing the number of components will also increase the need for maintenance. However, most of the equipment as electricity meters, the OLTC and the DG units are in operation anyway. So when coordinated voltage control is implemented, there are mainly the extended communication and the controllers added. Thus the complexity for maintenance will probably not increase much.

However, the number of tap changer operations is often a concern of DSOs when it comes to voltage control by changing the AVC setpoint. For sure in most cases there will be an increase in tap changer operations, but both the simulations and the field test showed that the number of operations should still be acceptable, considering the maintenance interval, which is depending on the number of tap changer operations but also on time. In any case it may be reasonable to monitor the number of tap changer operations, to have the option to tune some parameters if needed.

To keep the network reliability at the same high level after introducing coordinated voltage control, a fall back mode for operation in situations when the communication fails should be considered. If the communication fails could the AVC setpoint fall back to the traditional worst case settings. DG units could have a fail-safe mode that sets a predefined maximum generation. Thus

the supply of load is guaranteed, but the available capacity for distributed generation is reduced during the corresponding periods.

These steps should be considered regarding reliability and maintenance if active distribution networks are introduced:

1. Identify additional equipment.

2. Determine the extra maintenance introduced by the new equipment.

3. Consider the impact on the reliability of the new equipment.

4. Introduce fall back scenarios to operate the network when some equipment, e.g. communication, fails.

9.2.5 Agreements

If restrictions on DG connections are accepted, it is important to agree on their utilisation. For the DG developer it is important to know the amount of restrictions and which kind of equipment is needed for the DG unit. The DSO needs to define what is expected by the local DG control and which power flow is tolerated, both maximum active and reactive.

Considering simply voltage control with reactive power consumption may be an option, if the DG capacity is only slightly higher than the hosting capacity of the connection point without reactive power consumption. As a benefit the agreement could be simplified. Nevertheless this method is not suitable if voltage control by a varying AVC setpoint or active power curtailment should be used.

In the case of several DG units, especially if they are deployed by different DG developers, it should be clarified how the priority between the units is distributed.

From the perspective of the DSO, the most simple way is to inform the DG developer about several alternatives for connections including their costs and

the restrictions that are to be expected. It should also be defined, how additional curtailment, which exceeds the expected amount, is treated.

The following steps are recommended for the agreement:

1. Determining the firm capacity at the connection point.

2. Determine different connection scenarios with voltage control and calculate the expected restrictions.

3. Offer different types of connections to the DG developer, for instance determined by the 5-Step-Method.

4. Define functions and limits for active and reactive power control.

9.2.6 Implementation Guidelines

Each of the previous subsections includes some steps for the implementation of active distribution systems. Figure 9.1 shows a flow chart summarizing the main steps for upgrading an existing distribution network and integrating coordinated voltage control.

9.3 Distributed Generation Developer

Distributed generation developers probably have the main interest in efficient integration of distributed generation into existing distribution networks as they usually have to take the costs for the network connection. However, their influence on the choice of solution is normally limited since they are depending on the proposal from the network operator. In this section the discussion is about some issues that should be considered by DG developers if non firm DG connections are planned.

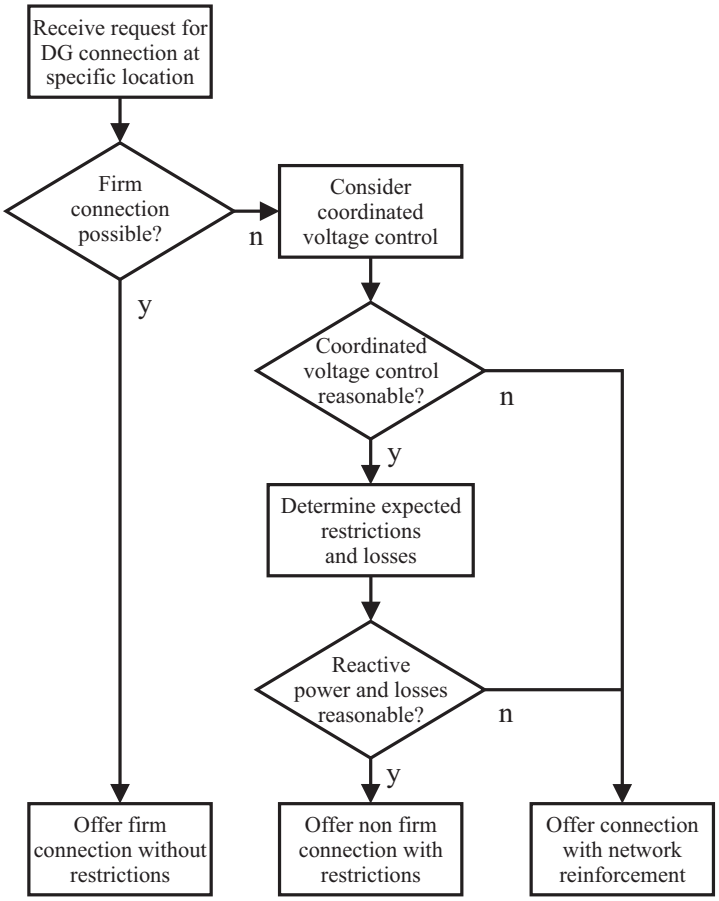

Figure 9.1: Simplified flow chart for the implementation steps applied by DSOs when establishing non firm DG connections.

9.3.1 Cost Efficient Connection

For the distributed generation developer a cost efficient connection is essential as it has a direct impact on the total investment and income for the project. Often only a specific location or at least a limited area is available for the placement of the DG units. Thus it may be difficult to choose the point of connection with respect to the available capacity. Especially for the connections of individual DG units the connection cost may be a key issue.

Usually the DG developer asks for the cost of the connection at the actual location with a specific nominal DG power output. In most cases the DSO assumes a firm connection and executes some calculations to determine the costs for the connection. The DG developer is normally not familiar with distribution network planning and has to trust the DSO that the offer for the DG connection is fair regarding the extent of network reinforcement or limitations in context to the DG output.

Some steps for a cost efficient DG connection are proposed:

1. Make a request for at DG connection with the desired capacity at the planned location.

2. Consider a request for non firm connection with constraints if a firm connection is more expensive than planned.

3. Be prepared to offer functions for active and reactive power control.

9.3.2 DG Capacity and Restrictions

Maybe the most important number for the planning of networks with distributed generation is the nominal output of the DG unit in the considered project. In many cases the size of the DG unit is limited by investment that the developer is able to make or by environmental restrictions.

However, the hosting capacity of the network at the specific location may also be a limiting factor. If firm connections are assumed as the only acceptable alternative it is quite simple to determine the nominal DG output power. It is simple to choose the maximum of the firm capacity at the connection point and the maximum capacity considered in the project. For active distribution systems with voltage control the situation is more complex. The DSO can offer different connection types with various restrictions and costs. Accepting restrictions can thus reduce the connection costs. But there may also be demands for voltage control on the DG unit.

Two important steps regarding the DG capacity and restrictions are:

1. Chose the DG capacity which provides the largest output per unit of the connection cost.

2. Determine the expected consequences from a non firm connection with the given restrictions (e.g. by using the 5-Step-Method).

9.3.3 Agreements

Agreements for non firm DG connections are more complex than the ones for firm DG connections. For a DG developer planning the investment it is important to know if there may be restrictions on the connection and to which extent they are expected to be used. Furthermore the DG developer needs to know if some local control should be used and what is expected from the equipment.

For the DG developer probably exists a trade off between connection costs and the amount of restrictions that can be tolerated. Thus rare restrictions could probably be tolerated if the connection costs are reduced. However, for the planning of DG, there exists already uncertainty regarding the amount of generated energy. Thus it is important that the agreement for the connection includes reliable information about the connection capacity.

In case of local control by the DG unit, these measures should be included in the agreement. There might be further restrictions if the local control is not working as expected but also costs from reactive power consumption. In addition there might be benefits from decreasing the power flow in the network which generate some benefits.

Some issues to be considered regarding the agreement for non firm DG connections are:

1. Ask for expected restrictions at the connection point.

2. Include how local control should be performed.

3. Determine benefits and costs from active power generation and reactive

power consumption.

4. Ask for other functions to implement for reducing connection costs or increase of connection capacity.

9.3.4 Implementation Guidelines

Although many details should be considered for non firm DG connections, Figure 9.2 gives a summary of the main steps to be considered by the DG developer.

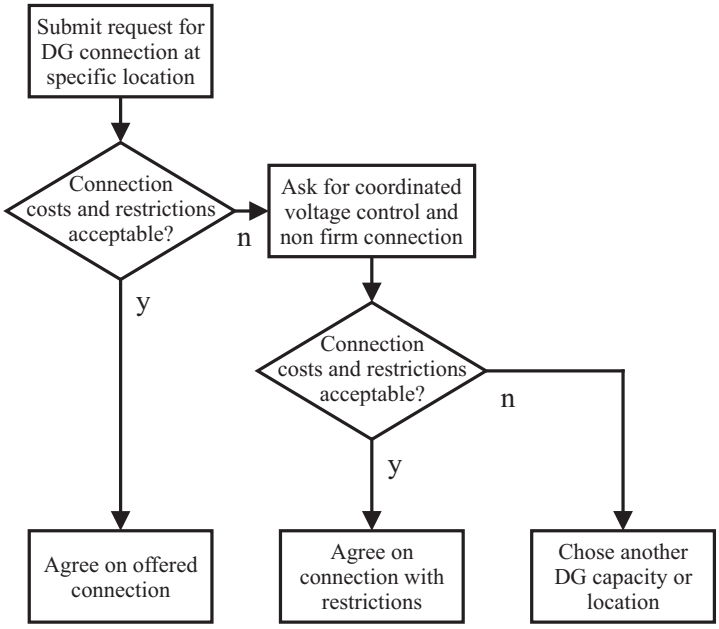

Figure 9.2: Flow chart showing the planning steps for non firm DG connections for DG developer.

9.4 Summary

As shown in this chapter for active distribution networks with coordinated voltage control there is a need for the 5-Step-Method since restrictions on the connection are possible and have to be evaluated in advance. Furthermore both DSOs and DG developers have to be involved in the roll-out of active distribution systems. However, most of the decisions have to be taken by the DSO, but with the current rules in many countries the DG developer has the main interest in introducing active distribution systems to increase the hosting capacity of existing distribution networks. Thus DG connections can be established at a lower cost.

Within the different sections some planning steps for the introduction of coordinated voltage control are given. These steps include experiences from the simulations but also from the implementation of coordinated voltage control in the field test system. At the end of the corresponding sections a summarizing flow chart for both DSOs and DG developers can be found.

Non firm DG connections offer more flexibility and may reduce the connection costs for distributed generation to existing distribution networks. The benefits are obtained by accepting temporarily constraints on the DG connection and thus increasing the utilisation factor for the network connection during most of the time. As more options are available and some uncertainty is introduced, the planning process becomes more complex.

Chapter 10

Conclusions and Future Work

In this chapter the final conclusions from the work are presented. Finally an outlook on future work within the main topics of this thesis is given.

10.1 Conclusions

The *Efficient Integration of Distributed Generation in Electricity Distribution Networks* is the title of this thesis. In the first chapters the focus was on the control of the network voltage in distribution systems with distributed generation. Present voltage limits have been identified as a limitation for the further integration of DG in existing passive low and medium voltage distribution networks.

The physical impact of DG units on the distribution networks has been studied and limitations for the connection of DG have been identified. A network model representing a typical medium voltage distribution network has been developed to study the impact of DG on medium voltage distribution systems. Three typical feeder types can be found in distribution networks. Each of them with its own voltage characteristic, abandoning the traditional assumption of an always decreasing voltage along distribution feeders. As all three feeder types are often coexistent in a distribution network, their voltage characteristic has to be considered for voltage control separately.

Continuous voltage control in distribution networks is assumed to have the

potential to increase the hosting capacity of existing low and medium voltage distribution networks. After identifying three main methods for voltage control in distribution networks, the methods have been included in an algorithm for coordinated voltage control to obtain the possibility of extensive voltage control. The control algorithm developed within this thesis has than been approved by simulations in a test system with load and generation data as well as network data from an existing distribution network in Southern Sweden. The network includes the whole 20 kV part of the network and two underlying 0.4 kV networks. A large amount of wind power and photovoltaics have been connected to the distribution network, to stress the control algorithm.

The results from the simulations have shown that all three methods for voltage control, i.e. adjusting the AVC setpoint, reactive power consumption and active power curtailment, are functional in low and medium voltage distribution networks with distributed generation. Especially the adjustment of the AVC setpoint is often quite efficient as the available voltage range for the voltage rise cause by the injection of active power from DG units is often very limited. A change of the tap changer position increases the available voltage band quite much. Furthermore changing the tap changer position does not introduce additional losses. Reactive power consumption has been found to be able to reduce the voltage in distribution systems on both voltage levels. However, due to the location of the reactance, in medium voltage networks the voltage is mainly affected on a feeder base while it affects the voltage on the whole corresponding secondary substation level in low voltage parts of the network. Due to the low X/R ratio of distribution systems, the amount of reactive power needed for voltage control can become comparatively large in proportion to the active power injection. A drawback of the consumption of reactive power is the possible increase in network losses which depends on the total network situation. Active power curtailment is as expected also suitable for limiting the voltage rise introduced by DG units. Probably this method is least favoured as energy has to be spilled. Nevertheless it should be accepted in some situations when the use is limited to rare periods and in its extent.

From the simulation results it could also be identified that the adjustment of the AVC setpoint and reactive power consumption are also effective for voltage control separately under some premises. Most of the time the load is

used to be sufficient low to decrease the AVC setpoint and thus to widen the voltage band available for DG. However, during periods with high load this method is limited. Voltage control by consuming reactive power only is always possible and has the gain to be controlled locally and fast. Nevertheless it tends to increase the losses which especially in networks with a high DG penetration can become a reason to limit the use of reactive power.

In context with this work a field test on coordinated voltage control in a distribution network has been arranged. The main objectives of the field test were trying to convert an existing passive distribution network into an active distribution system and to study the impact of the asynchronous measurement data which are used as input data for the controller. As a result it could be stated that it was fully possible to upgrade an existing passive distribution network to an active distribution system by introducing communication and automation. Nevertheless for upgrading in large scale some development in or upgrade of commercial available equipment would be needed. Regarding the delay introduced by the asynchronous measurements it was found out, that the occurring delays have not been critical for the control of the AVC setpoint as the time frame for the AVC is still a lot larger. Regarding the measurements for the local control of the wind turbine, it was different. There a change of the sample time from 10 s to 2 s could be noticed quite well on the consumption on reactive power.

Common practices for distribution network planning have been studied and critical components for the connection of DG have been identified. Due to the many different regulatory rules and legislation, different approaches for network planning are applied in various countries but also between different network operators in the same country. Thus distribution network planning may differ a lot. Nevertheless, traditionally distribution networks are usually designed to fit the needs for load supply. Network reinforcement was compared to network automation regarding their impact on the network voltage and the losses. While network reinforcement reduces both voltage rise and network losses, implementation of automation can be used to tackle voltage problems in distribution systems but does usually not reduce the losses. Nevertheless network automation has the potential to increase the hosting capacity drastically, especially when the requirement for firm connections is abandoned and restrictions on the connections are acceptable during some periods. Beside

the fact that the connection costs are decreasing, network automation is often faster to implement than network reinforcement.

If network connections with restrictions shall be accepted, it is from an economical perspective essential to know, to which extent the constraints occur. Thus a tool, the 5-Step-Method, which is fast and only depending on few input data has been developed, to determine the restrictions that will apply for non firm connections, if different voltage control strategies are implemented. The results obtained by the 5-Step-Method have been verified in a simple test system, where they have been compared to the results from power flow simulations.

As the sources for distributed generation units are often intermittent and varying over time, probabilistic data over several years have been used to determine the expected restrictions for non firm connections. For the test system it turned out, that the need for active power curtailment can be reduced significantly, when coordinated voltage control is implemented. The other way around the hosting capacity increases noticeable already when a small amount of active power curtailment is accepted instead of requiring a firm connection capacity. Thus the traditional assumption of worst case scenarios should be abandoned to permit the absorption of more energy from DG units in existing distribution systems.

Establishing non firm DG connections has been rather seldom in the past. Therefore processes for the technical implementation but also for deciding on agreements for this type of connection are not really common by now. Within this work the steps and issues to consider the technical implementation of coordinated voltage control have been proposed. Furthermore agreement issues for non firm connections, which include restrictions and active network control from the DG units, have been discussed. For both categories both the perspective from the DSO but also the perspective from the DG developer has been taken into account. It turned out that the DSO has the main responsibility for updating to active distribution systems and implementing coordinated voltage control. At the same time the interest for more cost efficient DG connections is mainly at the DG developer who has to take the investment. In addition it is important to specify the impact from restricted connections and the different tasks for the DSO and DG developer clearly.

To summarize, coordinated voltage control is needed for the successful integration of a high DG penetration. In many cases it postpones the needs for network reinforcements to a higher level of DG penetration at reasonable costs by increasing the utilization factor of existing networks. The equipment for network automation is in principal available and thus coordinated voltage control is ready for implementation in existing distribution networks.

10.2 Future Work

In this thesis network automation for increasing the DG capacity in existing distribution networks has been the focus. An algorithm for coordinated voltage control was developed and verified in simulations but later also implemented in an existing distribution network, which thereby was upgraded to an active distribution system. Furthermore a 5-Step-Method to determine the restrictions for non firm DG connections was presented. Notwithstanding the main issues for increasing the DG capacity of existing distribution networks by introducing automation are solved, there is still work to be done in the future.

As the voltage rise on the low voltage level becomes more relevant with increasing DG at low voltage, MV/LV transformers with on-load tap changers have recently been launched. Thus there is an additional degree to control the voltage on the low voltage level. Extending the coordinated voltage control with additional OLTCs at the secondary substations is therefore a natural step, which probably would increase the complexity in coordination between the HV/MV substation and the MV/LV substations considerably.

In the implemented algorithm for coordinated voltage control, it does not exist any coordination between the local controllers of the DG units. However, to optimize the operation of the total distribution network an approach for optimal power flow could be included. For example the voltage setpoints of the DG units could be adjusted continuously by the central controller to reduce the total network losses.

While the coordinated voltage control introduced in this thesis uses reactive

power to reduce the voltage and controls the AVC setpoint for up and down regulation of the voltage, for future applications an additional option may be to increase the voltage by reactive power injection during some periods, e.g. by active loads. Furthermore the priority and optimization between OLTC operations and reactive power consumption may become an issue for future studies.

After implementing coordinated voltage control in a medium voltage distribution network with one DG unit, an obvious next step is to implement coordinated voltage control in a larger system with more DG units and study, how the asynchronous control of the various DG units would affect each other. Moreover the implementation in a system with DG on the low voltage level would be worth to investigate as the DG unit in this case is closer to the customer connection point.

Most of the equipment used in the field test has been commercially available, but not necessarily dedicated to be applied in that context. Especially the reliable communication to a large number of electricity meters is still a challenge. As the control has been developed within this thesis, the controllers have not been available commercially. Though the equipment for upgrading passive distribution systems to active distribution networks with coordinated voltage control has still to be made available.

The 5-Step-Method could probably be improved for complex network situations and maybe the expected curtailment could be determined more precise. However, it should be considered that the 5-Step-Method is thought to be a fast and simple-to-apply method. Thus improvements, which increase the complexity, should be considered carefully. In the 5-Step-Method network losses are not included. As the consumption of reactive power in distribution systems tend to increase the losses, it would be important to determine the costs caused by voltage control with reactive power.

Last but not least both distributed generation developers and DNOs have to be convinced that connections with restriction are often beneficial for distributed generation. The requirement of firm connections and inflexible approaches based on worst case scenarios for network planning have to be abandoned. Instead a process for agreements on non firm connections has to be estab-

lished, so that both DG developers and DNOs can accept connections with restrictions during some periods.

Bidirectional power flow and increasing voltages are the first big shifts but it will not end there. Island operation to reduce outage times but also reducing transfer losses is another interesting option when local generation is available to a larger extent. Active loads are more than reasonable in the future and when electrical vehicles will become more widespread, their charging needs probably to be controllable as well.

References

[1] European Commission, *Europe 2020: a strategy for smart, sustainable and inclusive growth: communication from the Commission*. Publications Office, 2010.

[2] N. Jenkins, R. Allan, P. Crossley, D. Kirschen, and G. Strbac, *Embedded Generation*. The Institution of Electrical Engineers, 2000.

[3] T. Ackermann, G. Andersson, and L. Söder, "Distributed Generation: A Definition," *Electric Power Systems Research*, vol. 57, no. 3, pp. 195–204, Apr. 2001.

[4] C. Gao and M. A. Redfern, "A review of voltage control techniques of networks with distributed generations using On-Load Tap Changer transformers," in *Proc. 45th Int. Universities Power Engineering Conf. (UPEC)*, 2010, pp. 1–6. [Online]. Available: http://ieeexplore.ieee.org/stamp/stamp.jsp?tp=&arnumber=5650063&isnumber=5648789

[5] M. Thomson, "Automatic voltage-control relays and embedded generation," *Power Engineering Journal*, vol. 14, no. 3, pp. 93–99, 2000. [Online]. Available: http://digital-library.theiet.org/content/journals/10.1049/pe_20000301

[6] T. Ackermann and V. Knyazkin, "Interaction between Distributed Generation and the Distribution Network: Operation Aspects," in *Transmission and Distribution Conference and Exhibition 2002: Asia Pacific, IEEE/PES*, vol. 2, Oct. 2002, pp. 1357–1362.

[7] G. Strbac, P. Djapić, T. Bopp, and N. Jenkins, "Chapter 21: Benefits of Active Management on Distribution Systems," in *Wind Power in Power*

Systems, T. Ackermann, Ed. Chichester: John Wiley & Sons, Ltd, 2005.

[8] J. Lopes, N. Hatziargyriou, J. Mutale, P. Djapic, and N. Jenkins, "Integrating distributed generation into electric power systems: A review of drivers, challenges and opportunities," *Electric Power Systems Research*, vol. 77, no. 9, pp. 1189–1203, 2007. [Online]. Available: http://www.sciencedirect.com/science/article/pii/S0378779606001908

[9] T. L. Wilson, "Measurement and verification of distribution voltage optimization results for the IEEE power & energy society," in *Power and Energy Society General Meeting, 2010 IEEE*. IEEE, 2010, pp. 1–9. [Online]. Available: http://ieeexplore.ieee.org/xpls/abs_all.jsp?arnumber=5589762

[10] V. Van Thong, J. Driesen, and R. Belmans, "Using distributed generation to support and provide ancillary services for the power system," in *Clean Electrical Power, 2007. ICCEP'07. International Conference on*. IEEE, 2007, pp. 159–163. [Online]. Available: http://ieeexplore.ieee.org/xpls/abs_all.jsp?arnumber=4272375

[11] M. G. Morgan, J. Apt, L. B. Lave, M. D. Ilic, M. Sirbu, and J. M. Peha, "The many meanings of "Smart Grid"," Jul. 2009, department of Engineering and Public Policy, Carnegie Mellon University.

[12] EN50160, "Voltage Characteristics of Electricity Supplied by Public Distribution Systems," IEC standard voltages, Belgium, 1999.

[13] Energimarknadsinspektionen (Swedish Energy Markets Inspectorate), "Energimarknadsinspektionens föreskrifter och allmänna råd om krav som ska vara uppfyllda för att överföringen av el ska vara av god kvalitet (in Swedish)," 2013.

[14] C. Schwaegerl, M. Bollen, K. Karoui, and A. Yagmur, "Voltage Control in Distribution Systems as a Limitation of the Hosting Capacity for Distributed Energy Resources," in *18th International Conference on Electricity Distribution*, Turin, Italy, Jun. 2005.

[15] Federal Ministry for the Environment, Nature Conservation and Nuclear Safety (BMU), "Renewable Energy Sources 2012 - Data from the Federal Ministry for the Environment, Nature Conservation and Nuclear Safety (BMU) on trends in renewable energy in Germany in 2012," Feb. 2013.

[16] DGS. Accessed: 2013-09-16. [Online]. Available: http://www.energymap.info/energieregionen/DE/105.html

[17] A. Keane, "Integration of Distributed Generation," Ph.D. dissertation, University College Dublin, 2007.

[18] S. N. Liew and G. Strbac, "Maximising penetration of wind generation in existing distribution networks," *IEE Proceedings- Generation, Transmission and Distribution*, vol. 149, no. 3, pp. 256–262, 2002. [Online]. Available: http://ieeexplore.ieee.org/stamp/stamp.jsp?arnumber=1007424

[19] S. Conti and A. M. Greco, "Innovative Voltage Regulation Method For Distribution Networks With Distributed Generation," in *CIRED 19th International Conference on Electricity Distribution (CIRED 2007)*, Vienna, Austria, May 2007.

[20] Q. Zhou and J. Bialek, "Generation curtailment to manage voltage constraints in distribution networks," *Generation, Transmission & Distribution, IET*, vol. 1, no. 3, pp. 492–498, 2007. [Online]. Available: http://ieeexplore.ieee.org/xpls/abs_all.jsp?arnumber=4202030

[21] R. Caldon, S. Spelta, V. Prandoni, and R. Turri, "Co-ordinated voltage regulation in distribution networks with embedded generation," in *Electricity Distribution, 2005. CIRED 2005. 18th International Conference and Exhibition on*. IET, 2005, pp. 1–4. [Online]. Available: http://ieeexplore.ieee.org/xpls/abs_all.jsp?arnumber=5427876

[22] F. Bignucolo, R. Caldon, V. Prandoni, S. Spelta, and M. Vezzola, "The Voltage Control on MV Distribution Networks with Aggregated DG Units (VPP)," in *Proceedings of the 41st International Universities*

Power Engineering Conference (UPEC '06), 2006, vol. 1, Sep. 2006, pp. 187–192.

[23] A. Kulmala, K. Maki, S. Repo, and P. Jarventausta, "Active Voltage Level Management of Distribution Networks with Distributed Generation using On Load Tap Changing Transformers," in *Proc. IEEE Lausanne Power Tech*, 2007, pp. 455–460. [Online]. Available: http://ieeexplore.ieee.org/stamp/stamp.jsp?arnumber=4538360

[24] F. Kupzog, H. Brunner, W. Pruggler, T. Pfajfar, and A. Lugmaier, "DG DemoNet-Concept - A new Algorithm for active Distribution Grid Operation facilitating high DG penetration," in *Industrial Informatics, 2007 5th IEEE International Conference on*, vol. 2, Jun. 2007, pp. 1197–1202.

[25] F. Bignucolo, R. Caldon, and V. Prandoni, "Radial MV Networks Voltage Regulation with Distribution Management System Coordinated Controller," *Electric Power Systems Research*, vol. 78, no. 4, pp. 634–645, 2008.

[26] W. Pruggler, F. Kupzog, B. Bletterie, and B. Helfried, "Active Grid Integration of Distributed Generation Utilizing Existing Infrastructure more Efficiently - an Austrian Case Study," in *Electricity Market, 2008. EEM 2008. 5th International Conference on European*, May 2008, pp. 1–6.

[27] A. Kulmala, S. Repo, and P. Järventausta, "Increasing Penetration of Distributed Generation in Existing Distribution Networks using Coordinated Voltage Control," *International Journal of Distributed Energy Resources*, vol. 5, no. 3, pp. 227–255, 2009.

[28] A. Kulmala, A. Mutanen, A. Koto, S. Repo, and P. Järventausta, "RTDS Verification of a Coordinated Voltage Control Implementation for Distribution Networks with Distributed Generation," in *Innovative Smart Grid Technologies Conference Europe (ISGT Europe), 2010 IEEE PES*, Oct. 2010, pp. 1–8.

[29] A. Kulmala, A. Mutanen, A. Koto, S. Repo, and P. Jarventausta,

"Demonstrating coordinated voltage control in a real distribution network," in *Innovative Smart Grid Technologies (ISGT Europe), 2012 3rd IEEE PES International Conference and Exhibition on*. IEEE, 2012, pp. 1–8. [Online]. Available: http://ieeexplore.ieee.org/xpls/abs_all.jsp?arnumber=6465607

[30] J. Mutale, G. Strbac, S. Curcic, and N. Jenkins, "Allocation of Losses in Distribution Systems with Embedded Generation," *Generation, Transmission and Distribution, IEE Proceedings-*, vol. 147, no. 1, pp. 7 – 14, Jan. 2000.

[31] T. Lund, A. H. Nielsen, and P. Sørensen, "Loss Allocation in a Distribution System with Distributed Generation Units," in *Nordic Wind Power Conference (NWPC 2007)*, Roskilde, Denmark, Nov. 2007.

[32] A. Lugmaier, H. Brunner, B. Bletterie, F. Kupzog, and A. Abart, "Intelligent Distribution Grids in Respect of a Growing Share of Distributed Generation," in *CIRED 19th international Conference on Electricity Distribution*, Vienna, Austria, May 2007, pp. 1–4.

[33] M. Hird, N. Jenkins, and P. Taylor, "An Active 11kV Voltage Controller: Practical Considerations," in *17th International Conference on Electricity Distribution*, May 2003.

[34] C. Hird, H. Leite, N. Jenkins, and H. Li, "Network voltage controller for distributed generation," in *Generation, Transmission and Distribution, IEE Proceedings-*, vol. 151, no. 2. IET, 2004, pp. 150–156. [Online]. Available: http://ieeexplore.ieee.org/xpls/abs_all.jsp?arnumber=1281016

[35] F. A. Viawan, A. Sannino, and J. Daalder, "Voltage control with on-load tap changers in medium voltage feeders in presence of distributed generation," *Electric power systems research*, vol. 77, no. 10, pp. 1314–1322, 2007. [Online]. Available: http://www.sciencedirect.com/science/article/pii/S0378779606002446

[36] M. Braun, "Reactive Power Supply by Distributed Generators," *Power*

and Energy Society General Meeting - Conversion and Delivery of Electrical Energy in the 21st Century, 2008 IEEE, pp. 1–8, 2008.

[37] J. Slootweg, S. de Haan, H. Polinder, and W. Kling, "Chapter 19: Wind Power and Voltage Control," in *Wind Power in Power Systems*, T. Ackermann, Ed. Chichester: John Wiley & Sons, Ltd, 2005.

[38] J. Morren, S. de Haan, and J. Ferreira, "Contribution of DG units to voltage control: Active and reactive power limitations," in *Power Tech, 2005 IEEE Russia*, Jun. 2005, pp. 1–7.

[39] G. Kerber, R. Witzmann, and H. Sappl, "Voltage Limitation by Autonomous Reactive Power Control of Grid Connected Photovoltaic Inverters," in *Proc. CPE '09. Compatibility and Power Electronics*, 2009, pp. 129–133.

[40] T. Stetz, W. Yan, and M. Braun, "Voltage control in distribution systems with high level pv-penetration," in *25th European PV Solar Energy Conference and Exhibition. Valencia*, 2010.

[41] A. Abart, A. Lugmair, and A. Schenk, "Smart metering features for managing low voltage distribution grids," in *Proc. 20th Int. Conf. and Exhibition Electricity Distribution - Part 1 (CIRED 2009)*, 2009, pp. 1–4.

[42] R. P. Lewis, P. Igic, and Z. Zhou, "Assessment of communication methods for smart electricity metering in the U.K." in *Proc. IEEE PES/IAS Conf. Sustainable Alternative Energy (SAE)*, 2009, pp. 1–4.

[43] M. A. Peskin, P. W. Powell, and E. J. Hall, "Conservation Voltage Reduction with feedback from Advanced Metering Infrastructure," in *Transmission and Distribution Conference and Exposition (T&D), 2012 IEEE PES*. IEEE, 2012, pp. 1–8. [Online]. Available: http://ieeexplore.ieee.org/xpls/abs_all.jsp?arnumber=6281644

[44] D. J. Burke and M. J. O'Malley, "A Study of Optimal Nonfirm Wind Capacity Connection to Congested Transmission Systems,"

Sustainable Energy, IEEE Transactions on, vol. 2, no. 2, pp. 167–176, 2011. [Online]. Available: http://ieeexplore.ieee.org/xpls/abs_all.jsp?arnumber=5643190

[45] R. Currie, G. Ault, and J. McDonald, "Methodology for determination of economic connection capacity for renewable generator connections to distribution networks optimised by active power flow management," in *Generation, Transmission and Distribution, IEE Proceedings-*, vol. 153, no. 4. IET, 2006, pp. 456–462. [Online]. Available: http://ieeexplore.ieee.org/xpls/abs_all.jsp?arnumber=1659672

[46] A. Keane, E. Denny, and M. O'Malley, "Quantifying the impact of connection policy on distributed generation," *Energy Conversion, IEEE Transactions on*, vol. 22, no. 1, pp. 189–196, 2007. [Online]. Available: http://ieeexplore.ieee.org/xpls/abs_all.jsp?arnumber=4106007

[47] L. F. Ochoa, C. J. Dent, and G. P. Harrison, "Distribution network capacity assessment: Variable DG and active networks," *Power Systems, IEEE Transactions on*, vol. 25, no. 1, pp. 87–95, 2010. [Online]. Available: http://ieeexplore.ieee.org/xpls/abs_all.jsp?arnumber=5332248

[48] P. Chen, "Stochastic Modeling and Analysis of Power System with Renewable Generation," Ph.D. dissertation, Department of Energy Technology, Aalborg University, February 2010.

[49] S. Repo, H. Laaksonen, and P. Järventausta, "Statistical short-term network planning of distribution system and distributed generation," in *15th Power Systems Computation Conference*, 2005.

[50] N. B. Negra, O. Holmstrøm, B. Bak-Jensen, and P. Sørensen, "Model of a synthetic wind speed time series generator," *Wind Energy*, vol. 11, no. 2, pp. 193–209, 2008. [Online]. Available: http://onlinelibrary.wiley.com/doi/10.1002/we.244/abstract

[51] A. Kulmala, K. Maki, S. Repo, and P. Jarventausta, "Including active voltage level management in planning of distribution networks with

distributed generation," in *Proc. IEEE Bucharest PowerTech*, 2009, pp. 1–6. [Online]. Available: http://ieeexplore.ieee.org/stamp/stamp.jsp?arnumber=5282102

[52] A. Kulmala, S. Repo, and P. Jarventausta, "Using statistical distribution network planning for voltage control method selection," in *Renewable Power Generation (RPG 2011), IET Conference on*. IET, 2011, pp. 1–6. [Online]. Available: http://ieeexplore.ieee.org/xpls/abs_all.jsp?arnumber=6136065

[53] H. Leite, H. Li, N. Jenkins, and P. Gale, "Real-Time Voltage Regulation of Distribution Networks with Distributed Generation," in *CIRED 17th international Conference on Electricity Distribution*, 2003.

[54] E. Lakervi and E. Holmes, *Electricity Distribution Network Design*, 2nd ed. The Institution of Engineering and Technology, 1995.

[55] "IEEE 100 The Authoritative Dictionary of IEEE Standards Terms Seventh Edition," *IEEE Std 100-2000*, 2000.

[56] S. Repo, A. Nikander, A. Laaksonen, and P. Järventausta, "A Method to Increase the Integration Capacity of Distributed Generation on Weak Distribution Networks," in *17th International Conference on Electricity Distribution*, Barcelona, Spain, May 2003.

[57] F. Viawan and D. Karlsson, "Voltage and Reactive Power Control in Closed Loop Feeders with Distributed Generation," in *Power Tech, 2007 IEEE Lausanne*, Jul. 2007, pp. 549–554.

[58] J. Johansson, S. Lindahl, O. Samuelsson, and H. Ottoson, "The Storm Gudrun a Seven-Weeks Power Outage in Sweden," in *Third Conference on Critical Infrastructures (CRIS 2006)*, Alexandria, VA, USA, Sep. 2006.

[59] Swedish Energy Agency, "Storm Per - Lessons for a more secure energy supply after the second severe storm in the 21st century," May 2008, eT2007:35.

[60] J. D. Glover, M. S. Sarma, and T. Overbye, *Power System - Analysis and Design*, 4th ed. Toronto, Ontario, Canada: Thomson Learning EMEA, Limited, 2008.

[61] C. W. Taylor, *Power System Voltage Stability*, 1st ed. McGraw-Hill, 1994.

[62] B. Weedy and B. Cory, *Electric Power Systems*, 4th ed. Chichester: John Wiley & Sons Ltd, 1998.

[63] Ericsson Network Technologies AB, *Kraftkabel Handboken (in Swedish)*. Ericsson Network Technologies AB, 2004.

[64] Svensk Energi -Swedenenergy- AB, "AMP - Anslutning av mindre produktionsanläggningar till elnätet (in Swedish)," 2001.

[65] BDEW - Bundesverband der Energie- und Wasserwirtschaft e.V., "Richtlinie für Anschluss und Parallelbetrieb von Erzeugungsanlagen am Mittelspannungsnetz," *BDEW, Ausgabe Juni*, June 2008.

[66] C. W. Brice, "Voltage-drop calculations and power-flow studies for rural electric distribution lines," in *Rural Electric Power Conference, 1990. Papers Presented at the 34th Annual Conference*, 1990, pp. B2/1–B2/8.

[67] M. Larsson and D. Karlsson, "Coordinated Control of Cascaded Tap Changers in a Radial Distribution Network," in *Stockholm Power Tech, International Symposium on Electric Power Engineering, IEEE, Stockholm, Sweden*, Jun. 1995.

[68] R. Zimmermann, C. Murillo-Sánchez, and J. Thomas, "MATPOWER's Extensible Optimal Power Flow Architecture," in *Power Energy Society General Meeting, 2009. PES '09. IEEE*, July 2009, pp. 1–7.

[69] M. H. Bollen and F. Hassan, *Integration of distributed generation in the power system*. Wiley.com, 2011, vol. 80.

[70] P. Chen, K. K. Berthelsen, B. Bak-Jensen, and Z. Chen, "Markov model of wind power time series using Bayesian inference of transition matrix," in *Industrial Electronics, 2009. IECON'09. 35th Annual Conference of IEEE*. IEEE, 2009, pp. 627–632. [Online]. Available: http://ieeexplore.ieee.org/xpls/abs_all.jsp?arnumber=5414993

[71] A. Shamshad, M. Bawadi, W. Wan Hussin, T. Majid, and S. Sanusi, "First and second order Markov chain models for synthetic generation of wind speed time series," *Energy*, vol. 30, no. 5, pp. 693–708, 2005. [Online]. Available: http://www.sciencedirect.com/science/article/pii/S0360544204002609

[72] G. Papaefthymiou and B. Klockl, "MCMC for wind power simulation," *Energy Conversion, IEEE Transactions on*, vol. 23, no. 1, pp. 234–240, 2008. [Online]. Available: http://ieeexplore.ieee.org/xpls/abs_all.jsp?arnumber=4453993